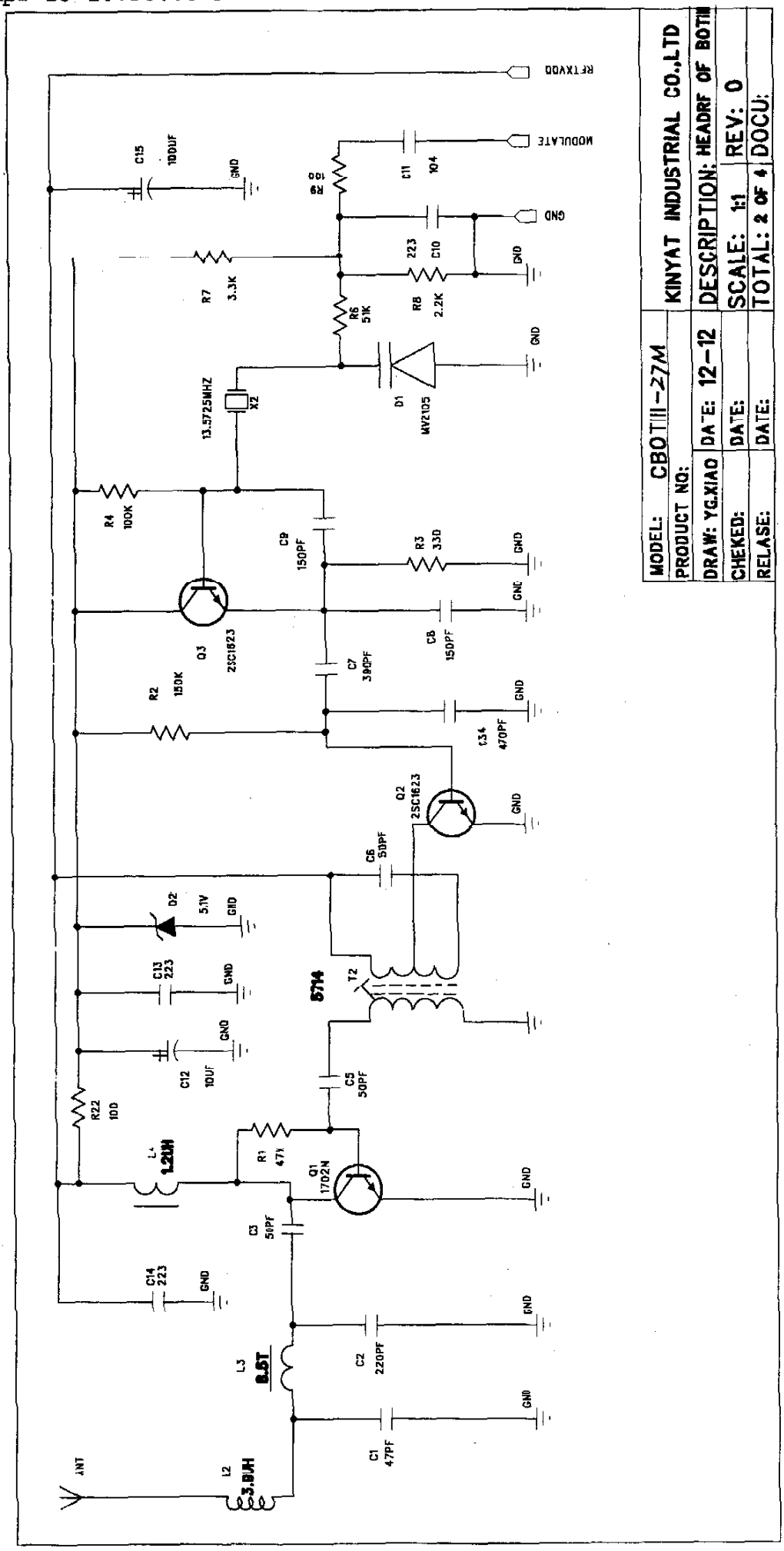
RFTXVDD
MODULATE
GND
C15 100UF
R9 100
C11 104
R7 3.3K
C10 223
R6 51K
R8 2.2K
D1 MV2105
X2 13.5725MHZ
R4 100K
C9 150PF
R3 330
Q3 2SC1623
C8 150PF
C7 390PF
R2 150K
C34 470PF
Q2 2SC1623
C6 50PF
D2 5.1V
C13 223
T2 5T4
C12 10UF
C5 50PF
R22 100
L4 1.2UH
R1 47K
Q1 17D2N
C3 50PF
C14 223
L3 8.5T
C2 220PF
C1 47PF
L2 3.8UH
ANT
MODEL: CBOTIII-27M
PRODUCT NO:
DRAW: YG.XIAO
DATE: 12-12
CHEKED:
DATE:
RELASE:
DATE:
KINYAT INDUSTRIAL CO.,LTD
DESCRIPTION: HEADRF OF BOTIII
SCALE: 1:1
REV: 0
TOTAL: 2 OF 4
DOCU:

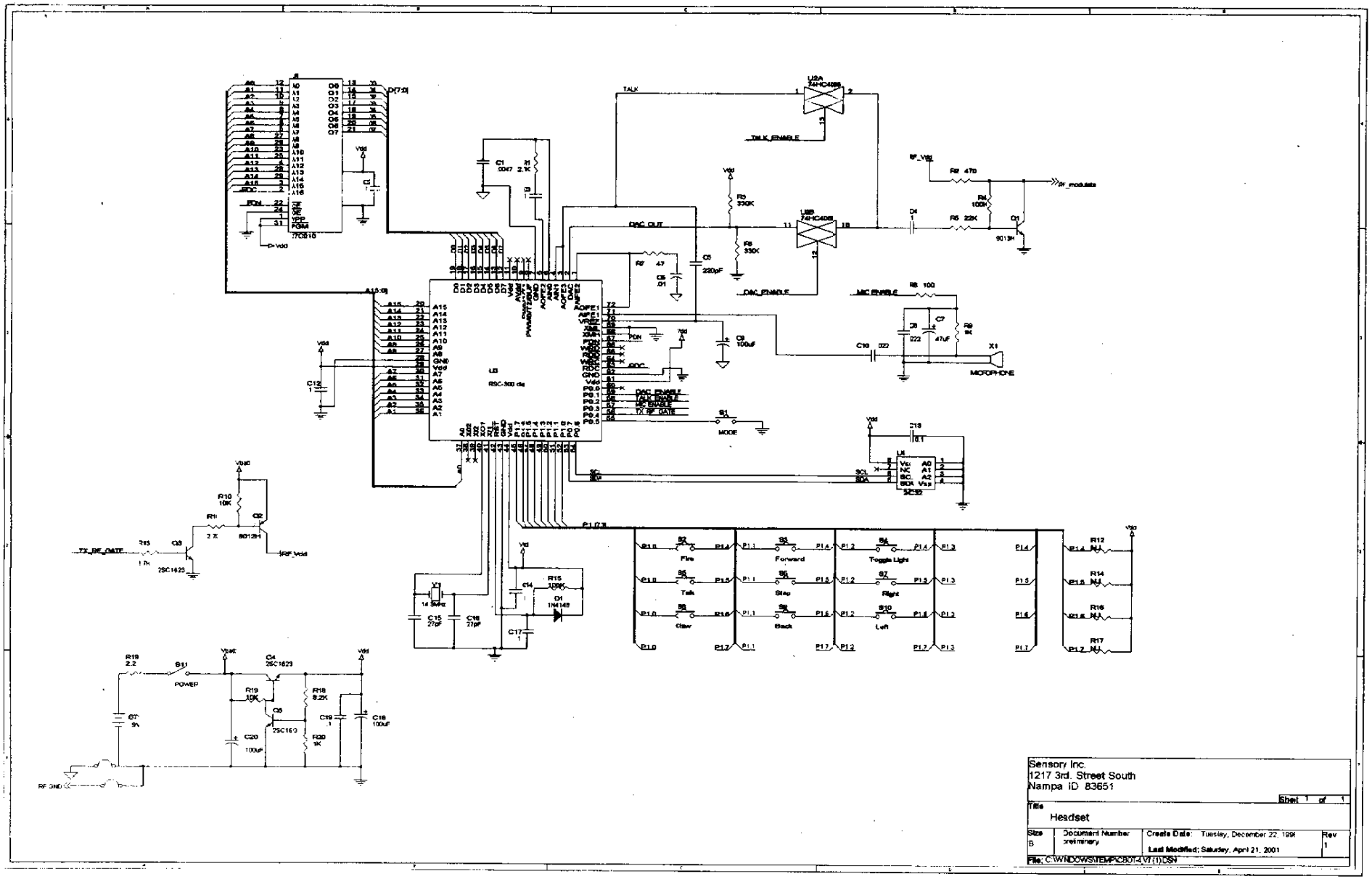
TALK
TALK_ENABLE
DAC OUT
DAC_ENABLE
MIC ENABLE
MICROPHONE
MODE
Fire
Forward
Toggle Light
Talk
Stop
Right
Claw
Back
Left
POWER
RF_GND
RF_Vdd
rf_modulate
TX_RF_GATE
Sensory Inc.
1217 3rd. Street South
Nampa ID 83651
Sheet 1 of 1
Title
Headset
Size
B
Document Number
preliminary
Create Date: Tuesday, December 22, 1998
Last Modified: Saturday, April 21, 2001
Rev
1
File: C:\WINDOWS\TEMP\C801-4.V7(1).DSN