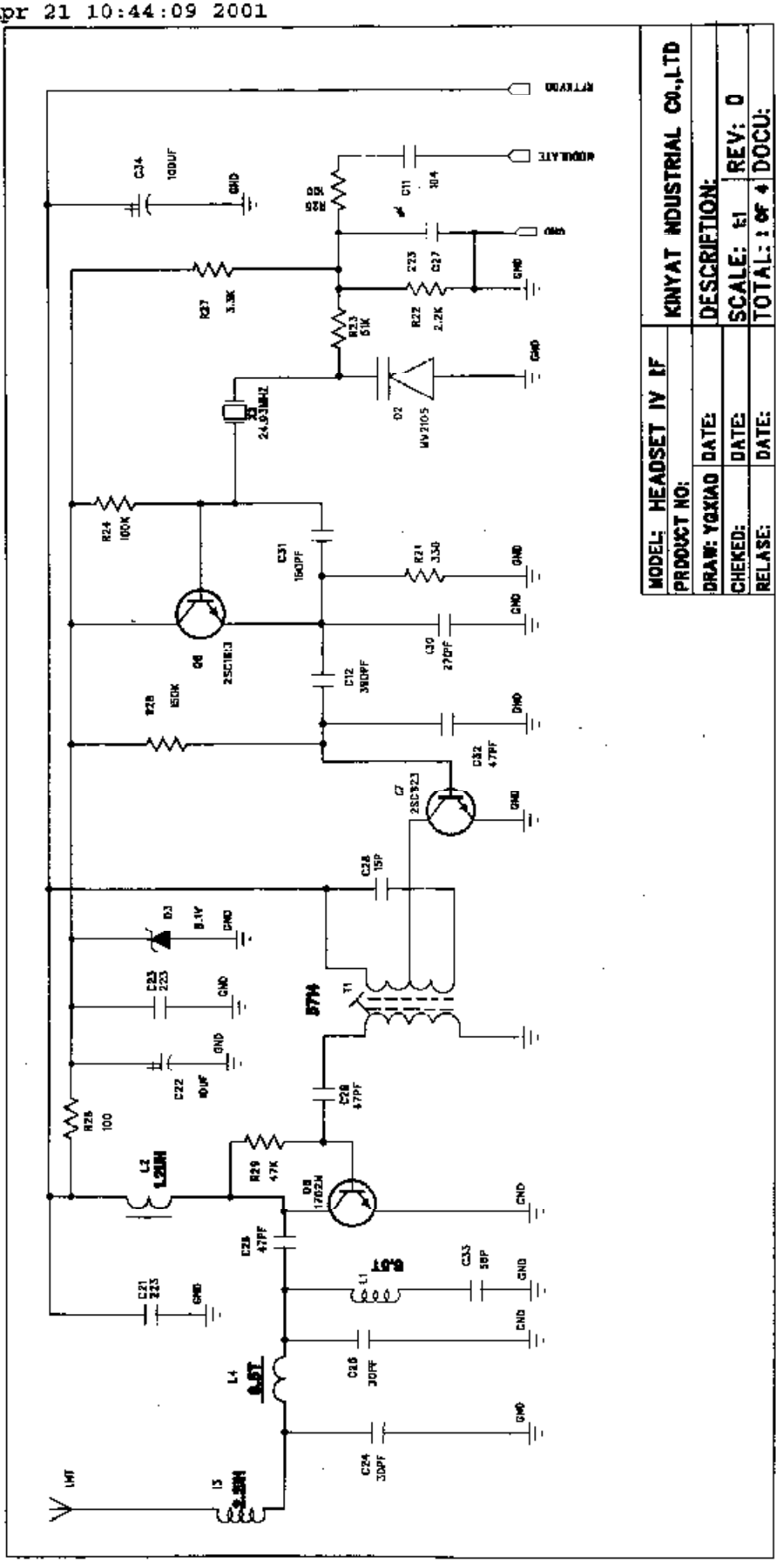
KONYAT INDUSTRIAL CO.,LTD
MODEL: HEADSET IV IF
PRODUCT NO:
DRAW: YQXIAO
DATE:
CHEKED:
DATE:
RELASE:
DATE:
DESCRIETION:
SCALE: 1:1
REV: 0
TOTAL: 1 OF 4
DOCU:
RETURN
MODULATE
GND
C34 100UF
R25 820
C11 104
R27 3.3K
R23 51K
R22 2.2K
C27 223
D2 MV2105
X1 24.93MHZ
R24 100K
C31 180PF
R21 330
C30 270PF
Q6 2SC1813
C12 390PF
R28 560K
D32 47PF
Q7 2SC923
C28 15P
D3 5.1V
C23 223
T1
C22 40UF
C26 47PF
R26 100
L2 1.2UH
R29 47K
Q8 17052M
C25 47PF
C33 39P
L1
C21 223
C16 30PF
L4 4.7T
C24 30PF
L3 2.2UH
ANT

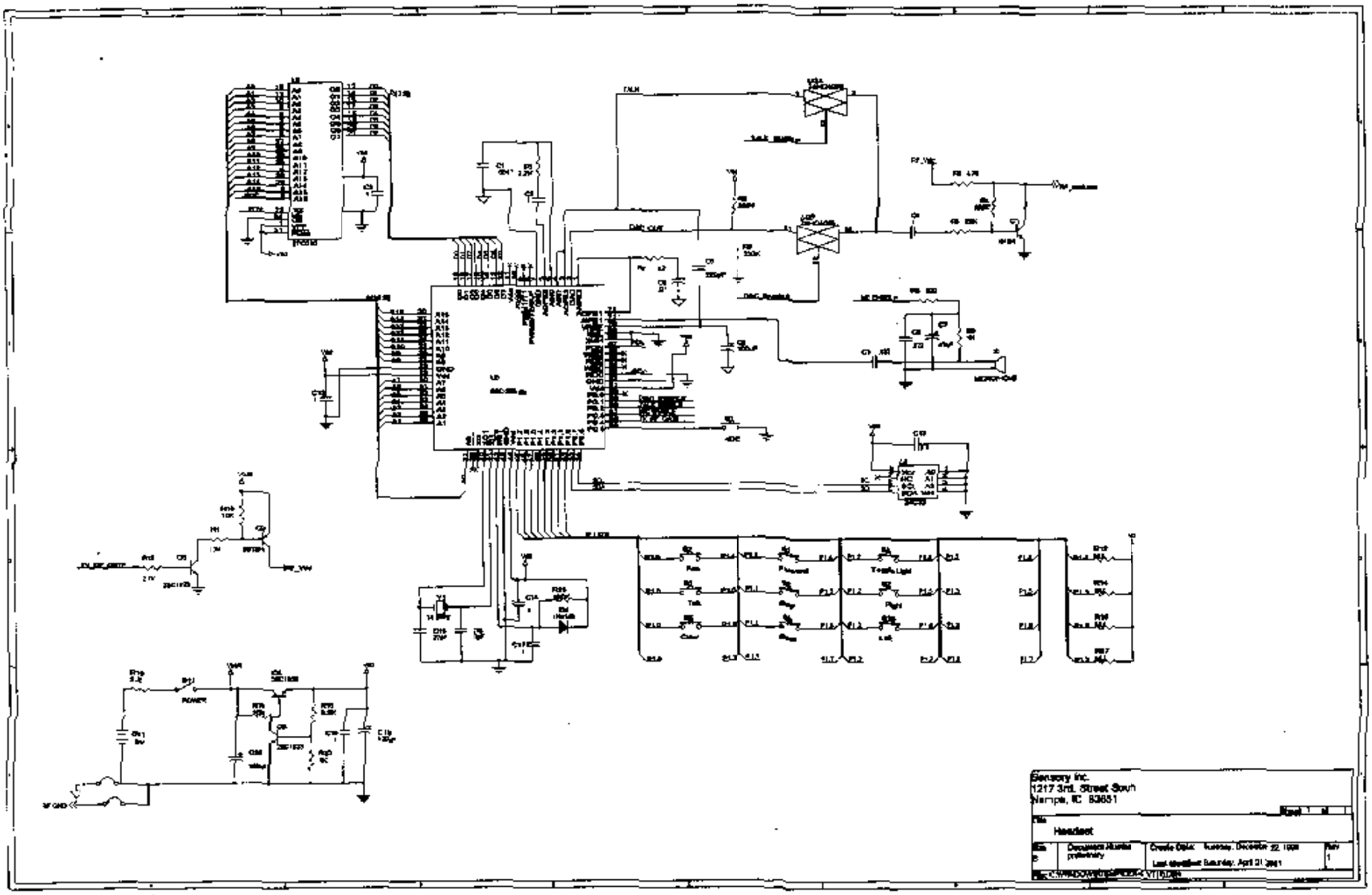
Sensory Inc.
1217 3rd. Street South
Nampa, IC 83651
Headset
Document Number
preliminary
Create Date: Tuesday, December 22, 1998
Last Modified Saturday, April 01 2001
Rev
1