Quick Start Guide
00825-0100-4075, Rev GH
May 2023

Emerson Wireless THUM™ Adapter

ROSEMOUNT™

EMERSON.

Safety Messages

NOTICE

This guide provides basic guidelines for the Emerson Wireless THUM™ Adapter. It does not provide instructions for detailed configuration, diagnostics, maintenance, service, troubleshooting, or installations. Refer to the THUM Adapter Reference Manual for more instruction. The manual and this guide are also available electronically on Emerson.com/Rosemount.

Equipment Damage

During normal operation, or in fault condition, the THUM Adapter will cause a 2.5 V drop in the connected loop. It is important to ensure that the power supply can provide at least 2.5 V more than the minimum operating voltage of the wired device to make sure it works properly with the THUM Adapter installed. To determine the minimum operating voltage for the wired device, review the wired device operation and installation manual.

NOTICE

This device complies with Part 15 of the FCC Rules. Operation is subject to the following conditions:

This device may not cause harmful interference.This device must accept any interference received, including interference that may cause undesired operation.

⚠ WARNING

Explosions could result in death or serious injury.

Installation of this transmitter in an explosive environment must be in accordance with the appropriate local, national, and international standards, codes, and practices. Review the approvals section of this manual for any restrictions associated with a safe installation.Before connecting a handheld communicator in an explosive atmosphere, ensure that the instruments are installed in accordance with intrinsically safe or non-incendive field wiring practices.

Electrical shock could cause death or serious injury.

Avoid contact with the leads and terminals. High voltage that may be present on leads can cause electrical shock.Device must be installed to ensure a minimum antenna separation distance of 8-in. (20 cm) from all persons.

Contents

Wireless considerations..... 5
Bench top configuration..... 7
Physical installation..... 8
Direct mount.....9
Remote mount..... 10

Wiring diagrams....11
Device network configuration....27
AMS Device Manager....28
Field Communicator....29
Perform loop current test....30
Verify operation....33
Troubleshooting....35
Reference information....36
Product Certifications....37

1 Wireless considerations

1.1 Power up sequence

The power module should not be installed on any wireless device until the Emerson Wireless Gateway is installed and functioning properly. Wireless devices should also be powered up in order of proximity from the Gateway, beginning with the closest. This will result in a simpler and faster network installation. Enable Active Advertising on the Gateway to ensure that new devices join the network faster. For more information see the Wireless Gateway Reference Manual.

1.2 THUM Adapter position

THUM Adapter should be positioned vertically straight up, and should be approximately 3 ft. (1 m) from any large structure, building or conductive surface to allow for clear communication to other devices. If the THUM Adapter is mounted horizontally, wireless communication range may be decreased. The THUM Adapter should not be mounted vertically straight down. See Wireless THUM Adapter Reference Manual for more information.

Figure 1-1: THUM Adapter Position

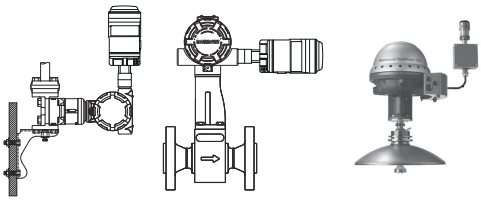

1.3 Conduit entry

When installing the THUM Adapter into the conduit entry of a wired device, use an approved thread sealant. Thread sealant provides a water tight seal. The thread sealant also provides lubrication to ensure easy removal of the THUM Adapter.

1.4 M20 conduit adapter

When using the M20 Conduit Adapter on the THUM Adapter, use an approved thread sealant and tighten wrench tight to the THUM Adapter. When installing the M20 conduit adapter into a conduit, tighten to 32.5 N-m/25 ft-lb to ensure watertight seal.

Field Communicator connections

In order for the Field Communicator to interface with the THUM Adapter, the wired device must be powered. The Field Communicator must be put into poll mode and should use the THUM Adapter address of 63.

1.5 Power supply

- Minimum loop load of 250 Ohms.
- The THUM Adapter communicates via and derives power from a standard 4–20 mA/HART® loop. The THUM Adapter causes a small voltage drop on the loop which is linear from 2.25 V at 3.5 mA to 1.2 V at 25 mA. Under fault conditions, the maximum voltage drop is 2.5 V. The THUM Adapter will not affect the 4–20 mA signal under normal or fault conditions as long as the loop has at least a 2.5 V margin at the maximum loop current (25 mA for a typical 4–20 mA/HART device).
- Limit the power supply to 0.5 Amps maximum and voltage to 30 Vdc.

Loop current	THUM Adapter voltage drop
3.5 mA	2.25 V
25 mA	1.2 V

1.6 Load resistor

If required, add a load resistor as shown in Figure 6-8, Figure 6-11 and Figure 6-12. The resistor should be adequately rated for the application (1 W minimum) and be compatible with the supplied splice connector which accepts wire sizes from 14 to 22 AWG.

1.7 Loop

To ensure proper operation, the THUM Adapter should not be installed on a HART loop with other active HART masters. HART masters that are active periodically, such as a field communicator can be used on a loop with a THUM Adapter.

2 Bench top configuration

When performing bench top configuration it is suggested that you connect the THUM Adapter to a wired device. If this is not possible, the following wiring diagrams can be used. For bench top configuration, ensure the power supply used is limited to 0.5 A maximum.

Figure 2-1: THUM Adapter Only, Powered by a Current Source

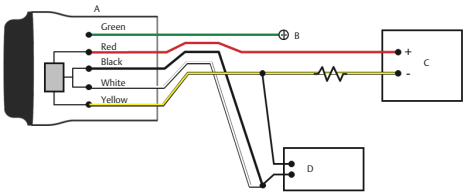

A. THUM Adapter
B. Ground
C. 20 mA current source
D. HART Modem

Figure 2-2: THUM Adapter Only, Powered by a 24 V Power Supply with 1200 Ohm Resistor to Limit Current to 20 mA

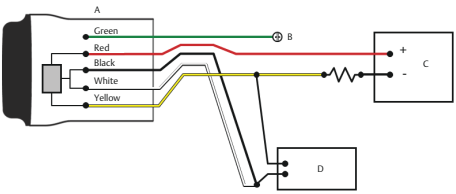

3 Physical installation

The THUM Adapter can be installed in one of two configurations:

1. **Direct mount:** The THUM Adapter is connected directly to the conduit entry of the wired device.
2. **Remote mount:** The THUM Adapter is mounted separate from the wired device housing and then connected to the wired device using conduit or other suitable means.

4 Direct mount

Prerequisites

Install the HART device according to standard installation practices and the manufacturer's instructions. Use an approved thread sealant on all connections.

Procedure

1. Attach the THUM Adapter to the wired device as shown in Figure 4-1.

Figure 4-1: Direct Mount

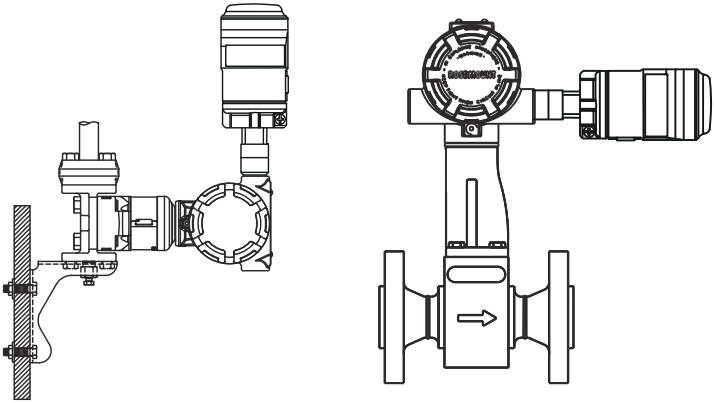

2. Connect the THUM Adapter to the HART wired device using the Wiring diagrams.
3. Close the housing cover on the HART wired device, so that metal touches metal, but do not overtighten to prevent damaging the unit.

Note
Two splice connectors are included with the THUM Adapter. The first is a two connection splice. The second is a three connection splice for use with a resistor, if there is not enough resistance in the loop. Both of these splice connectors can accept 14 to 22 gauge wire. See wired device reference manual for information on the required loop resistance.

5 Remote mount

Prerequisites

Install the HART device according to standard installation practices and the manufacturer's instructions. Use an approved thread sealant on all connections.

Procedure

1. The THUM Adapter should be mounted as shown in Figure 5-1.

Figure 5-1: Remote Mount

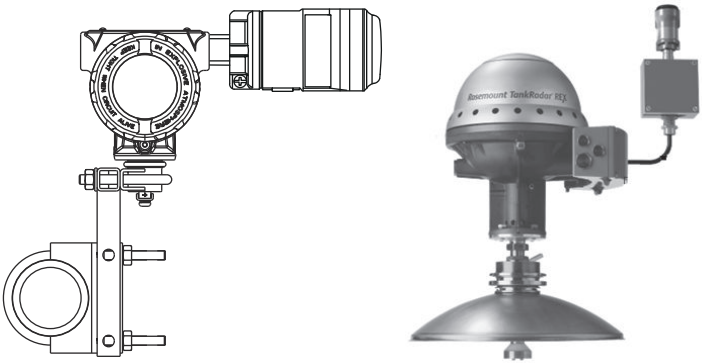

2. Ground the Remote Mount Kit per local practices.
3. Connect the THUM Adapter to the wired device using standard practices. Wire running from the THUM Adapter to the wired device should be shielded or in conduit when installed in electrically noisy environments.
4. Connect the THUM Adapter to the HART wired device using the Wiring diagrams.
5. Close the housing cover on the HART wired device, so that metal touches metal, but do not overtighten to prevent damaging the unit.

Note

Two splice connectors are included with the THUM Adapter. The first is a two connection splice. The second is a three connection splice for use with a resistor, if there is not enough resistance in the loop. Both of these splice connectors can accept 14 to 22 gauge wire. See wired device reference manual for information on the required loop resistance.

6 Wiring diagrams

Figure 6-1: Direct Mount Wiring Diagram for 2-Wire Device

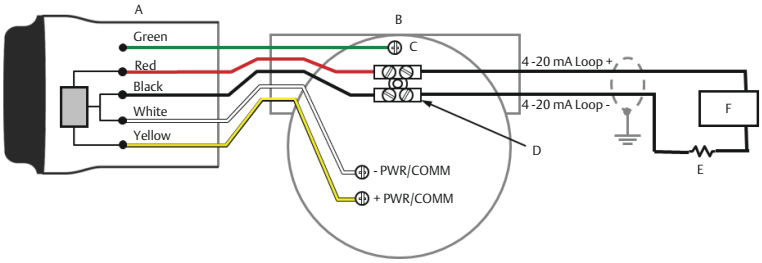

A. THUM Adapter
B. Wired device
C. Ground
D. Splice connector
E. Load resistor ≥ 250 W
F. Power supply

Note
In order for the THUM Adapter to function properly there must be at least 250 Ohms resistance in the loop. If the 4–20 mA loop does not have the required resistance, wire a resistor as shown in Figure 6-3, Figure 6-7, or Figure 6-11 as applicable.

Figure 6-2: Remote Mount Wiring Diagram for 2-Wire Device

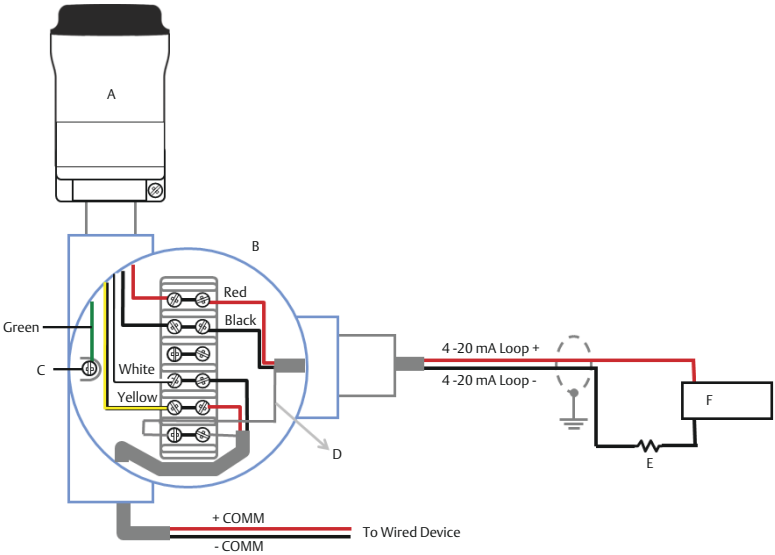

A. THUM Adapter
B. Remote mount housing
C. Ground
D. Shield wire
E. Load resistor ≥ 250 Ω
F. Power supply

Figure 6-3: Direct Mount Diagram for 2-Wire Device with Resistor

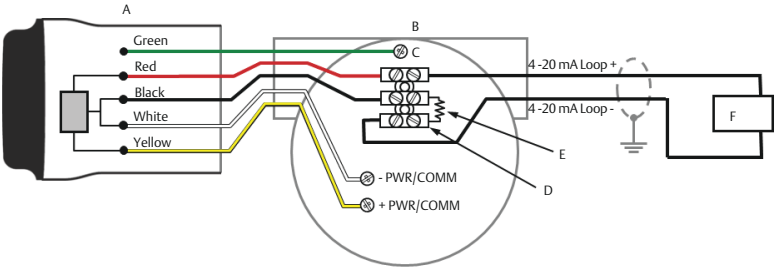

A. THUM Adapter
B. Wired device
C. Ground
D. Splice connector
E. Load resistor ≥ 250 Ω
F. Power supply

Figure 6-4: Direct Mount Wiring Diagram for 2-Wire Device with Resistor

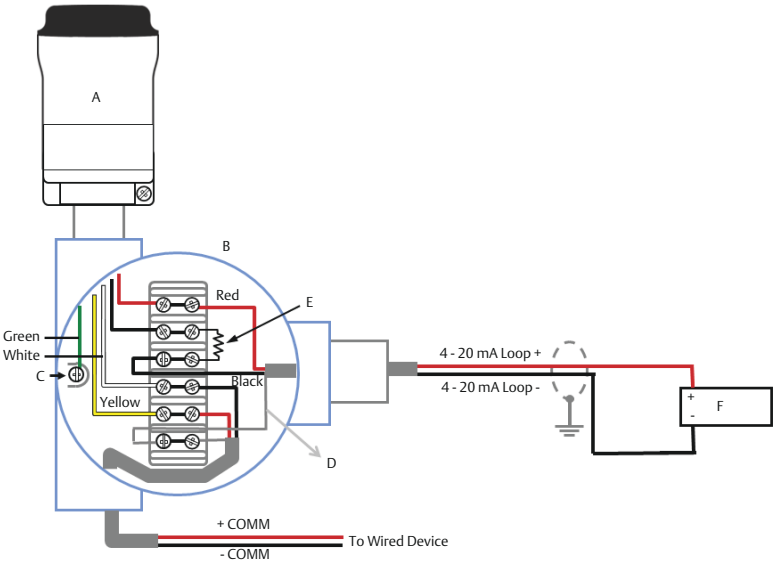

A. THUM Adapter
B. Remote mount housing
C. Ground
D. Shield wire
E. Load resistor ≥ 250 Ω
F. Power supply

Figure 6-5: Direct Mount Wiring Diagram for 4-Wire Passive Device

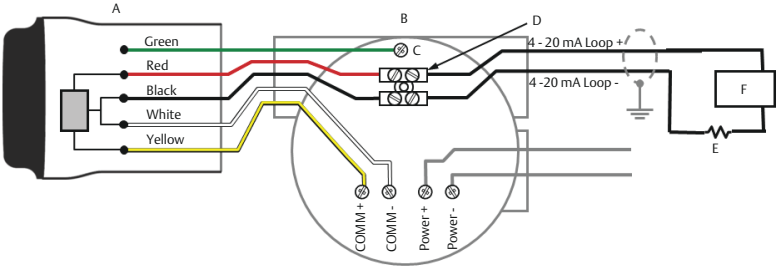

A. THUM Adapter
B. Wired device
C. Ground
D. Splice connector
E. Load resistor ≥ 250 Ω
F. Power supply

Note
A passive loop exists when the wired device is not supplying power to the 4–20 mA loop. It is important to verify if the wired device is operating in active or passive mode.

Figure 6-6: Remote Mount Wiring Diagram for 4-Wire Passive Device

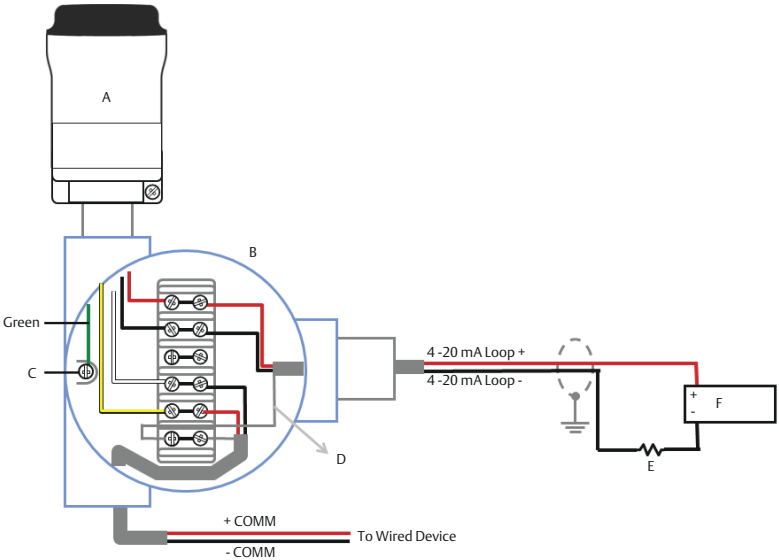

A. THUM Adapter
B. Remote mount housing
C. Ground
D. Shield wire
E. Load resistor ≥ 250 Ω
F. Power supply

Figure 6-7: Direct Mount Wiring Diagram for 4-Wire Passive Device with Resistor

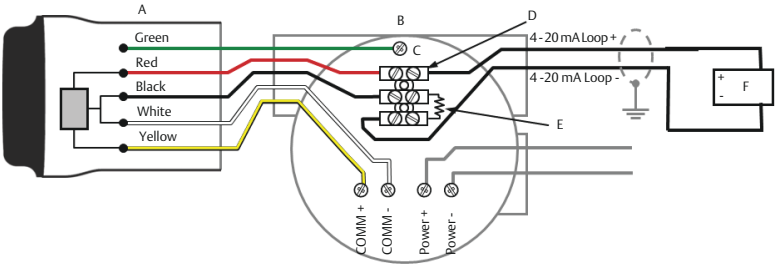

A. THUM Adapter
B. Wired device
C. Ground
D. Splice connector
E. Load resistor ≥ 250 Ω
F. Power supply

Figure 6-8: Remote Mount Wiring Diagram for 4-Wire Passive Device with Resistor

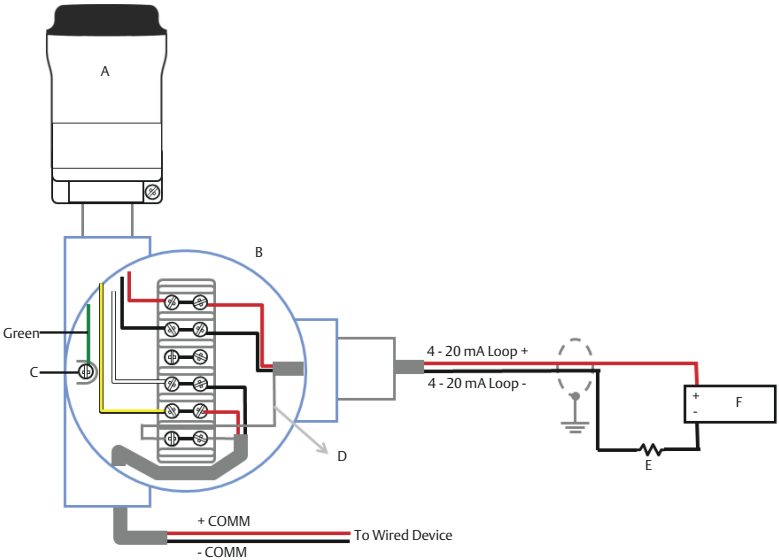

A. THUM Adapter
B. Remote mount housing
C. Ground
D. Shield wire
E. Load resistor ≥ 250 Ω
F. Power supply

Figure 6-9: Direct Mount Wiring Diagram for 4-Wire Active Device

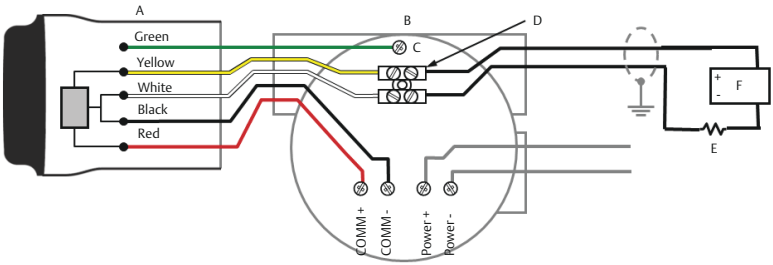

A. THUM Adapter
B. Wired device
C. Ground
D. Splice connector
E. Load resistor ≥ 250 Ω
F. Input card

Note

An active loop exists when the wired device is supplying the power to the 4–20 mA loop. It is important to verify if the wired device is operating in active or passive mode.

Figure 6-10: Remote Mount Wiring Diagram for 4-Wire Active Device

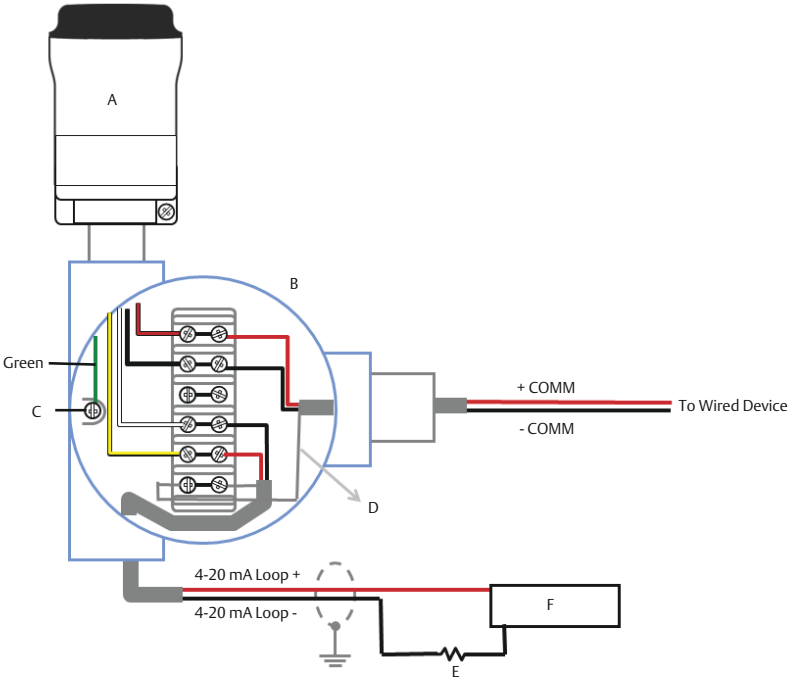

A. THUM Adapter
B. Remote mount housing
C. Ground
D. Shield wire
E. Load resistor ≥ 250 Ω
F. Input card

Figure 6-11: Direct Mount Wiring Diagram for 4-Wire Active Device with Resistor

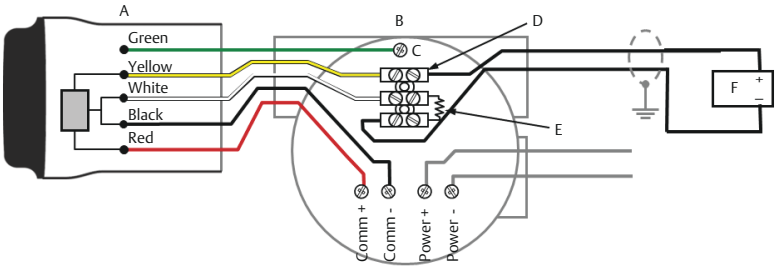

A. THUM Adapter
B. Wired device
C. Ground
D. Splice connector
E. Load resistor ≥ 250 Ω
F. Input card

Figure 6-12: Remote Mount Wiring Diagram for 4-Wire Active Device with Resistor

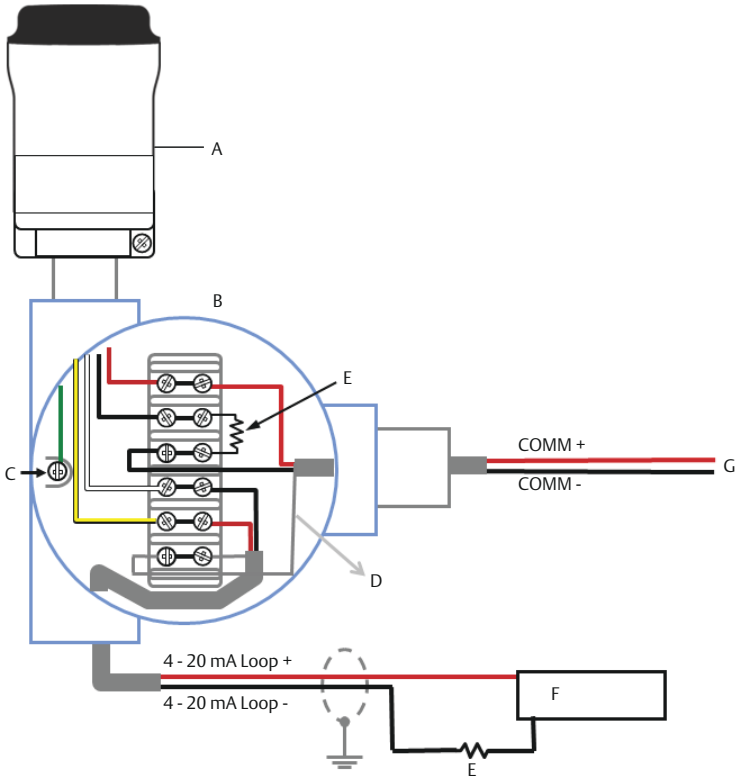

A. THUM Adapter
B. Remote mount housing
C. Ground
D. Shield wire
E. Load resistor ≥ 250 Ω
F. Input card
G. To wired device

Figure 6-13: Direct Mount Wiring Diagram for 4-Wire Active Device with No 4-20 mA Loop

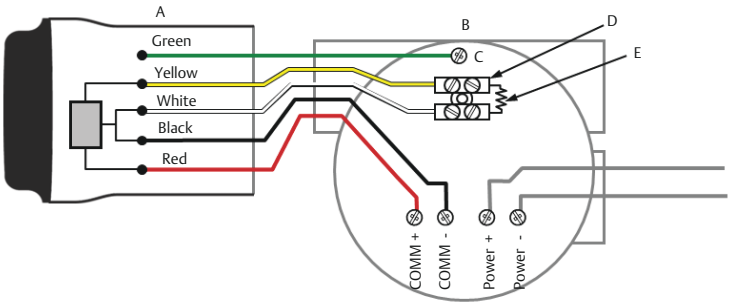

A. THUM Adapter
B. Wired device
C. Ground
D. Splice connector
E. Load resistor ≥ 250 Ω

Figure 6-14: Remote Mount Wiring Diagram for 4-Wire Active Device with No 4–20 mA Loop

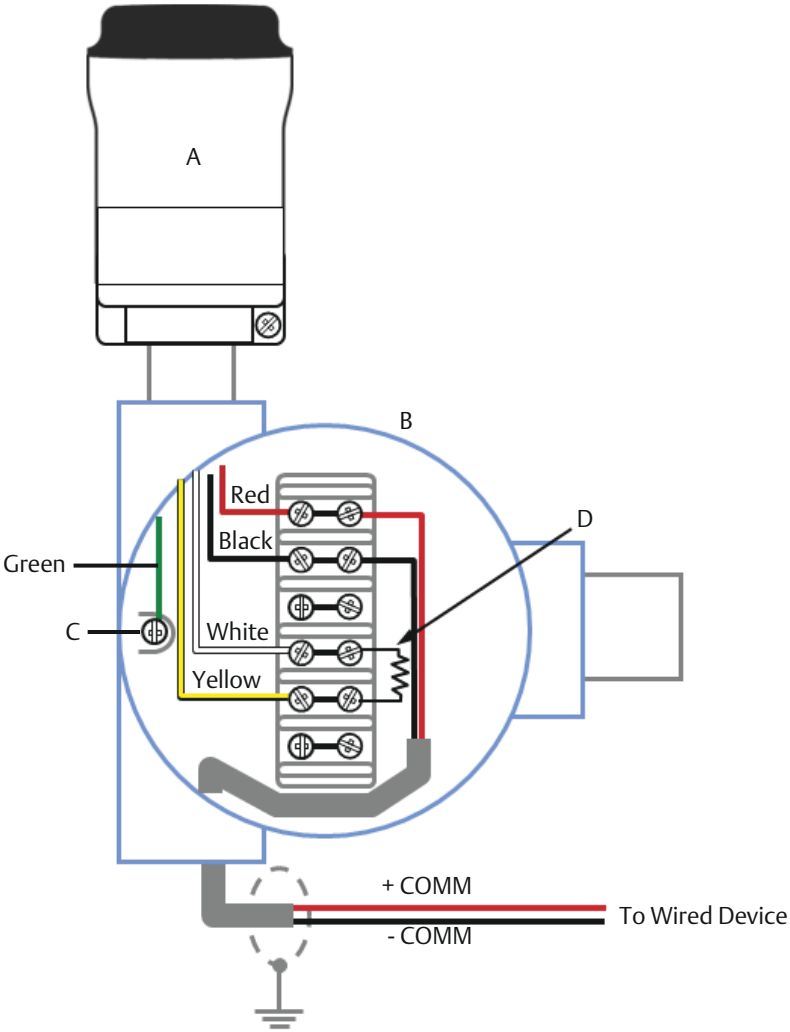

A. THUM Adapter
B. Remote mount housing
C. Ground
D. Load resistor ≥ 250 Ω

Figure 6-15: THUM Adapter only, Powered by a 24 V Power Supply with 1200 Ohm resistor to limit current to 20 mA

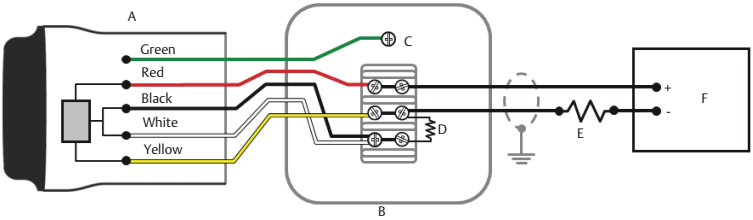

A. THUM Adapter
B. Junction box
C. Ground
D. 250 Ω resistor
E. 1200 Ohm resistor required
F. 24 V power supply

Figure 6-16: THUM Adapter only, Powered by a 24 V Power Supply with 1200 Ohm Resistor to Limit Current to 20 mA

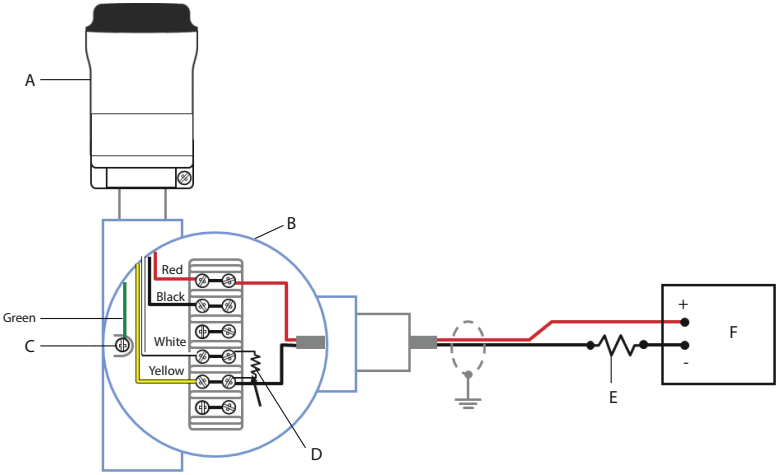

A. THUM Adapter
B. Remote mount housing
C. Ground
D. 250 Ω resistor
E. 1200 ohm resistor required
F. 24 V power supply

7 Device network configuration

In order to communicate with the Emerson Wireless Gateway, and ultimately the Information System, the transmitter must be configured to communicate with the wireless network. This step is the wireless equivalent of connecting wires from a transmitter to the information system. Using a Field Communicator or AMS Device Manager, enter the Network ID and Join Key so that they match the Network ID and Join Key of the gateway and other devices in the network. If the Network ID and Join Key are not identical, the THUM Adapter will not communicate with the network. The Network ID and Join Key may be obtained from the Gateway on the **Setup** → **Network** → **Settings** page on the web server, shown in Figure 7-1.

Figure 7-1: Gateway Network Settings

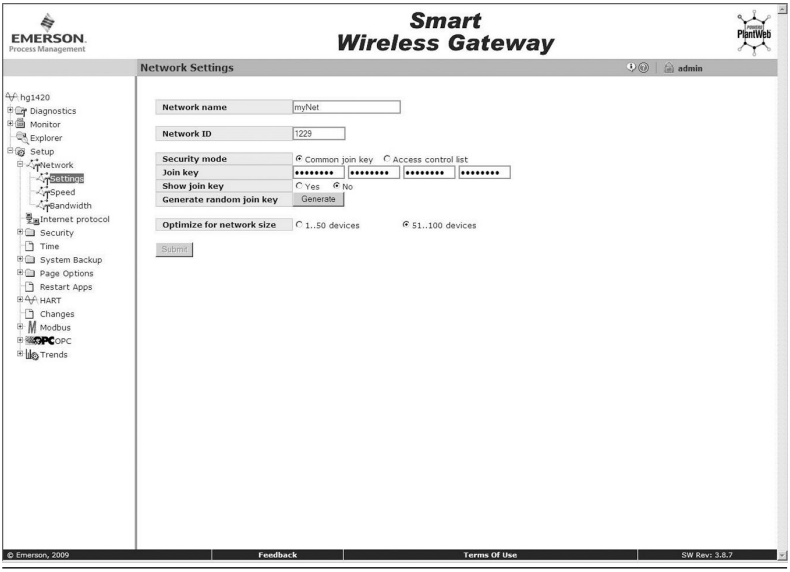

8 AMS Device Manager

Right-click on the THUM Adapter and select Configure. When the menu opens, select **Join Device** to **Network** and follow the method to enter the Network ID and Join Key.

9 Field Communicator

The Network ID and Join Key may be changed in the wireless device by using the following Fast Key sequence. Set both Network ID and Join Key.

Function	Fast Key sequence	Menu Items
Wireless Setup	1, 4	Smart Power, Network ID, Set Join Key, Radio State

10 Perform loop current test

To verify the THUM Adapter will work under all conditions, a loop current test should be performed. This test will exercise the loop under the highest possible voltage drop conditions.

Procedure

1. Place loop in manual control.
2. Drive loop to high alarm level. For details, see wired device instruction manual.
   - When the THUM Adapter is connected to a valve, this will need to be done at the current source and not from the valve.
   - When the THUM Adapter is connected to a transmitter, this will need to be performed at the transmitter.
3. Place the THUM Adapter into fixed voltage drop mode.

   Configuring fixed voltage drop mode using AMS Device Manager

   a) Right click on the THUM Adapter and select ***Configure***.

   b) When the menu opens, select ***Manual Setup*** from the window on the left and select the ***Wired Device*** tab on the top.

   c) Make sure the ***Time*** drop down menu at the bottom of the page has ***Current*** selected.

   d) Under the ***Voltage Drop*** drop down menu in the *Smart Power Options* box, select ***Fixed Voltage Drop***.

   e) Select the ***Apply*** button to make any changes. See Figure 10-1

   Configuring fixed voltage drop mode using Field Communicator

   a) When communicating to the THUM Adapter select: **Configure → Manual setup → Wired Device → Voltage Drop Mode**

   b) In the method select ***Fixed Voltage Drop***.

Function	Fast Key sequence	Menu items
Voltage Drop	2, 2, 2, 2	Voltage Drop

4. Verify the current on the loop reaches the high alarm levels.
5. Place the THUM Adapter into variable voltage drop mode.

Configuring variable voltage drop mode using AMS Device Manager

a) Right click on the THUM Adapter and select ***Configure***.

b) When the menu opens, select ***Manual Setup*** from the window on the left and select the ***Wired Device*** tab on the top.

c) Make sure the ***Time*** drop down menu at the bottom of the page has ***Current*** selected.

d) Under the ***Voltage Drop*** drop down menu in the *Smart Power Options* box, select ***Variable Voltage Drop***.

e) Select the ***Apply*** button to make any changes. See Figure 10-1

Configuring fixed voltage drop mode using Field Communicator

a) When communicating to the THUM Adapter select: **Configure** → **Manual setup** → **Wired Device** → **Voltage Drop Mode**.

b) In the method select ***Variable Voltage Drop***.

Function	Fast Key sequence	Menu items
Voltage Drop	2, 2, 2, 2	Voltage Drop

6. Remove loop from high alarm value.

Figure 10-1: AMS Device Manager Configure Screen

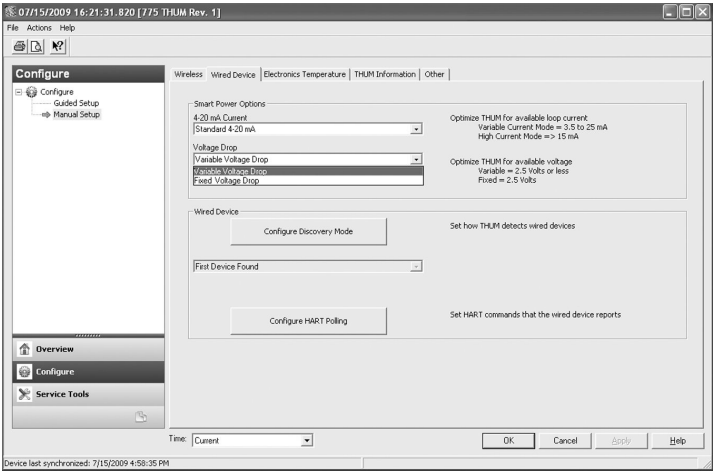

11 Verify operation

Operation can be verified using one of three methods: Field Communicator, the Wireless Gateway's integrated web interface, or via AMS Device Manager.

11.1 Verify operation using Field Communicator

For HART Wireless transmitter communication, a THUM Adapter DD is required.The Field Communicator must be put into poll mode using the THUM Adapter address of 63. Use the wired device documentation to connect the Field Communicator to the THUM Adapter.

Table 11-1: Field Communicator Connections

Function	Fast Key sequence	Menu items
Communications	3, 3	Join Status, Wireless Mode, Join Mode, Number of Available Neighbors, Number of Advertisements Heard, Number of Join Attempts

11.2 Verify operation using Emerson Wireless Gateway

If the THUM Adapter was configured with the Network ID and Join Key, and sufficient time has passed for network polling, the transmitter will be connected to the network. To verify device operation and connection to the network with the Gateway's integrated web server, open the Gateway's integral web interface and navigate to the *Explorer* page.

Note
It may take several minutes for the device to join the network.

11.3 Verify operation using AMS Device Manager

When the device has joined the network, it will appear in the AMS Device Manager as illustrated in Figure 11-1.

Figure 11-1: AMS Device Manger

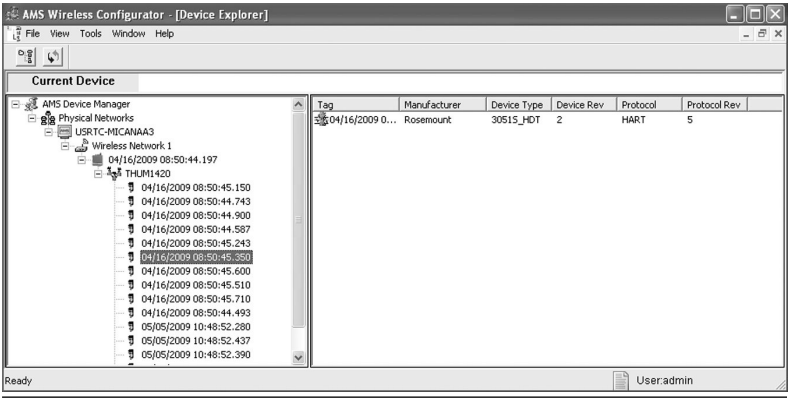

12 Troubleshooting

If the device is not operating properly, refer to the Troubleshooting section of the manual. The most common cause of incorrect operation is the Network ID and Join Key. The Network ID and Join Key in the device must match that of the Gateway.

The Network ID and Join Key may be obtained from the Gateway on the **Setup** → **Network** → **Settings** page on the web server. The Network ID and Join Key may be changed in the wireless device by using the following Fast Key sequence.

Function	Fast Key sequence	Menu items
Wireless Setup	1, 4	Smart Power, Network ID, Set Join Key, Radio State

13 Reference information

Note
In order to communicate with a Field Communicator, the wired device must be powered.

Table 13-1: THUM Adapter Fast Key Sequence

Function	Fast Key sequence	Menu items
Device Info	2, 2, 4, 3	Manufacturer, Model, Final Assembly Number, Universal, Field Device, Software, Hardware, Descriptor, Message, Date, Model Number I, II, III, SI Unit Restriction, Country
Guided Setup	2, 1	Configure, Guided Setup, Join Device to Network, Configure Update Rate, Zero Trim, Configure Device Display, Configure Process Alarms
Manual Setup	2, 2	Configure, Manual Setup, Wireless, Pressure, Device Temperatures, Device Information, Display, Other
Wireless	2, 2, 1	Network ID, Join Device to Network, Configure Update Rate, Configure Broadcast Power Level, Power Mode, Power Source

14 Product Certifications

Rev 2.11

14.1 European Directive Information

A copy of the EU Declaration of Conformity can be found at the end of the Quick Start Guide. The most recent revision of the EU Declaration of Conformity can be found at Emerson/Rosemount.

14.2 Ordinary location certification from FM Approvals

As standard, the transmitter has been examined and tested to determine that the design meets the basic electrical, mechanical, and fire protection requirements by FM Approvals.

14.3 Telecommunication compliance (for wireless products only)

All wireless devices require certification to ensure that they adhere to regulations regarding the use of the RF spectrum. Nearly every country requires this type of product certification.

14.4 FCC and ISED (for wireless products only)

This device complies with Part 15 of the FCC Rules. Operation is subject to the following conditions: This device may not cause harmful interference. This device must accept any interference received, including interference that may cause undesired operation. This device must be installed to ensure a minimum antenna separation distance of 20 cm from all persons.

Changes or modification to the equipment not expressly approved by Emerson could void the user's authority to operate the equipment.

This device contains licence-exempt transmitter(s)/receiver(s) that comply with Innovation, Science and Economic Development Canada's licence-exempt RSS(s). Operation is subject to the following two conditions:

(1) This device may not cause interference.
(2) This device must accept any interference, including interference that may cause undesired operation of the device.

L'émetteur/récepteur exempt de licence contenu dans le présent appareil est conforme aux CNR d'Innovation, Sciences et Développement économique Canada applicables aux appareils radio exempts de licence. L'exploitation est autorisée aux deux conditions suivantes :
(1) L'appareil ne doit pas produire de brouillage;
(2) L'appareil doit accepter tout brouillage radioélectrique subi, même si le brouillage est susceptible d'en compromettre le fonctionnement.

14.6 USA

14.6.1 E5 USA Explosionproof

Certificate CSA 2174201

Standards FM Class 3600 - 2011, FM Class 3615 - 2006, ANSI/UL 61010-1 3rd Edition

Markings Class I, Division 1, Groups A, B, C and D; T5, T6; Type 4X and IP66 (–50 °C≤ T_a ≤ +70 °C)

14.6.2 I5 USA Intrinsically Safe (IS) and Non-incendive

Certificate 3036224

Standards FM Class 3600 - 1998, FM Class 3610 - 2007, FM Class 3611 - 2004, FM Class 3810 - 2005, NEMA 250 - 2003, IEC 60529 - 2004

Markings IS CL I, DIV 1, GP A, B, C, D; CL II, DIV 1, GP E, F, G; Class III; Class 1, Zone 0, AEx ia IIC T4; NI CL I, DIV 2, GP A, B, C, D T4; T4(–50 °C≤ T_a ≤ +70 °C) when connected per Rosemount drawing 00775-0010; Type 4X/IP66

14.7 Canada

14.7.1 E6 Canada Explosionproof

Certificate CSA 2174201

Standards CAN/CSA C22.2 No. 0-M91, CSA Std. C22.2 No. 30-M1986, CAN/CSA-C22.2 No. 94-M91, CAN/CSA-C22.2 No. 61010-1-12, CSA Std. C22.2 No. 60529

Markings Class I, Division 1, Groups A, B, C and D; T5, T6; Type 4X and IP66 (–50 °C≤ T_a ≤ +70 °C)

14.7.2 I6 Canada Intrinsically Safe

Certificate 2174201

Standards CAN/CSA C22.2 No. 0-M91 (R2001), CAN/CSA C22.2 No. 94-M91 (R2001), CSA Std C22.2 No. 142-M1987, CAN/CSA C22.2 No.157-92, CSA Std C22.2 No. 213-M1987, C22.2 No. 60529

Markings Intrinsically Safe Class I, Division 1, Groups A, B, C, D T3C; Suitable for use in Class I, Division 2, Groups A, B, C, D T3C; T3C(–50 °C≤ T_a ≤ +70 °C) when installed per Rosemount drawing 00775-0012; Type 4X/IP66

14.8 Europe

14.8.1 I1 ATEX Intrinsic Safety

Certificate	Baseefa09ATEX0125X
Standards	IEC 60079-0:2011; EN60079-11:2012;
Markings	Ⓔx II 1G Ex ia IIC T4 Ga, T4(–50 °C≤ T_a ≤ +70 °C)

Special Conditions for Safe Use (X):

1. The surface resistivity of the antenna is greater than 1GΩ. To avoid electrostatic charge build-up, it must not be rubbed or cleaned with solvents or dry cloth.
2. The Rosemount 775 enclosure may be made of aluminum alloy and given a protective polyurethane paint finish; however, care should be taken to protect it from impact or abrasion if located in zone 0.

14.8.2 N1 ATEX Type n

Certificate	Baseefa09ATEX0131
Standards	IEC 60079-0:2012 + A11:2013, EN 60079-15:2010;
Markings	Ⓔx II 3G Ex nA IIC T4 Gc, T4(–50 °C≤ T_a ≤ +70 °C) IP66

14.9 International

14.9.1 I7 IECEx Intrinsic Safety

Certificate	IECEx BAS 09.0050X
Standards	IEC 60079-0:2011, IEC 60079-11:2011
Markings	Ex ia IIC T4 Ga, T4(–50 °C≤ T_a ≤ +70 °C) IP66

Special Conditions for Safe Use (X):

1. The surface resistivity of the antenna is greater than 1 GΩ. To avoid electrostatic charge build-up, it must not be rubbed or cleaned with solvents or dry cloth.
2. The Rosemount 775 enclosure may be made of aluminum alloy and given a protective polyurethane paint finish; however, care should be taken to protect it from impact or abrasion if located in zone 0.

14.9.2 N7 IECEx Type n

Certificate IECEx BAS 09.0058

Standards IEC 60079-0:2011, IEC 60079-15:2010;

Markings Ex nA IIC T4 Gc, T4(–50 °C≤ T_a ≤ +70 °C) IP66

14.10 Brazil

14.10.1 I2 INMETRO Intrinsic Safety

Certificate UL-BR 15.0089X

Standards ABNT NBR IEC 60079-0:2013, ABNT NBR IEC 60079-11:2013

Markings Ex ia IIC T4 Ga (–50 °C≤ T_a ≤ +70 °C), IP66

Special Conditions for Safe Use (X):

1. The surface resistivity of the antenna is greater than 1 GΩ. To avoid electrostatic charge build-up, it must not be rubbed or cleaned with solvents or dry cloth.
2. The enclosure may be made of aluminum alloy and given a protective polyurethane paint finish; special care must be taken to minimize the risk of impact or friction of the housing which can cause the generation of sparks.

14.10.2 N2 INMETRO Type n

Certificate UL-BR 15.0027

Standards ABNT NBR IEC 60079-0:2008 + Errata 1:2011, IEC 60079-15:2012

Markings Ex nA IIC T4 Gc (–50 °C≤ T_a ≤ +70 °C) IP66

14.11 China

14.11.1 I3 NEPSI Instrinsic Safety

Certificate: GYJ20.1388X

Standards: GB/T 3836.1-2021, GB/T 3836.4-2021
Ex ia IIC T4 Ga, -50 ~ +70 °C

Markings: 产品使用特殊条件 (X)

1. 天线表面电阻率大于 1GΩ。为避免静电积聚，不得使用溶剂或干布擦拭。

2. 775 型外壳可由铝合金制成，并涂有保护性聚氨酯漆；但是应小心以保护

其免受冲击或磨损（此条不适用于不锈钢外壳版本）。

二、产品使用注意事项

1. 本安电气参数

Table 14-1:

最高输入电压	最大输入电流	最大输入功率	最大内部等效参数	
Ui (V)	**Ii (mA)**	**Pi (W)**	**Ci (nF)**	**Li (mH)**
30	200	1	0	0

2. 该产品必须与已通过防爆认证的关联设备配套共同组成本安防爆系统方可

使用于爆炸性气体环境。其系统接线必须同时遵守本产品和所配关联设备的使用说

明书要求，接线端子不得接错。

3. 用户不得自行更换该产品的零部件，应会同产品制造商共同解决运行中出

现的故障，以杜绝损坏现象的发生。

4. 产品的安装、使用和维护应同时遵守产品使用说明书、GB/

T3836.13-2021“爆炸性环境 第 13 部分：设备的修理、检修、修复和改造”、GB/

T3836.15-2017“爆炸性环境 第 15 部分：电气装置的设计、选型和安装”、GB/

T3836.16-2017“爆炸性环境 第 16 部分：电气装置的检查与维护”、GB/

T3836.18-2017“爆炸性环境 第 18 部分：本质安全电气系统”、GB50257-2014“电

气装置安装工程爆炸和火灾危险环境电力装置施工及验收规范”的有关规定。

14.12 Japan

14.12.1 I4 CML Intrinsically Safe

Certificate	CML19JPN2107X
Markings	Ex ia IIC T4 Ga, -50 °C~ +70 °C

Special Condition for Safe Use (X):

1. See certificate for special conditions.

14.13 EAC - Belarus, Kazakhstan, Russia, Armenia, Kyrgyzstan

14.13.1 IM Technical Regulation Customs Union (EAC) Intrinsic Safety

Certificate	ТОО Т-Стандарт ЕАЭС KZ 7500525.01.01.00689
Markings	0Ex ia IIC T4 Ga X; T4 (–50 °C≤ T_a ≤ +70 °C) IP66

Special Condition for Safe Use (X):

1. See certificate for special conditions.

14.13.2 NM Technical Regulation Customs Union (EAC) Type n

Certificate	ТОО Т-Стандарт ЕАЭС KZ 7500525.01.01.00689
Markings	2Ex nA IIC T4 Gc X; T4 (–50 °C≤ T_a ≤ +70 °C) IP66

Special Condition for Safe Use (X):

1. See certificate for special conditions.

14.14 Republic of Korea

14.14.1 IP Korea (KOSHA) Intrinsic Safety

Certificate	10-KB4BO-0010X
Markings	Ex ia IIC T4

Special Condition for Safe Use (X):

1. See certificate for special conditions.

14.15 India

14.15.1 IW India (CCOE) Intrinsic Safety

Certificates	A/P/HQ/MH/104/4259(P366317)
Markings	Ex ia IIC T4

14.16 Combinations

KM	Combination of IM and NM

14.17 Declaration of Conformity

Figure 14-1: Emerson THUM Wireless Adapter Declaration of Conformity

EMERSON

EU Declaration of Conformity

No: RMD 1077 Rev. J

We,

Rosemount, Inc.
6021 Innovation Boulevard
Shakopee, MN 55379-4676
USA

declare under our sole responsibility that the product,

Rosemount 775 THUM WirelessHART Adaptor

manufactured by,

Rosemount, Inc.
6021 Innovation Boulevard
Shakopee, MN 55379-4676USA

to which this declaration relates, is in conformity with the provisions of the European Union Directives, including the latest amendments, as shown in the attached schedule.

Assumption of conformity is based on the application of the harmonized standards and, when applicable or required, a European Union notified body certification, as shown in the attached schedule.

(signature)	Vice President of Global Quality (function)
Mark Lee (name)	5-Aug-2021; Boulder, CO USA (date of issue)

Page 1 of 3

EMERSON

EU Declaration of Conformity

No: RMD 1077 Rev. J

EMC Directive (2014/30/EU)

Harmonized Standards:
EN 61326-1: 2013

Radio Equipment Directive (RED) (2014/53/EU)

Harmonized Standards:
EN 300 328 V2.2.2: 2019
EN 301 489-1 V2.2.0
EN 301 489-17 V3.2.0
EN 61010-1: 2010
EN 62479: 2010

ATEX Directive (2014/34/EU)

Baseefa09ATEX0125X – Intrinsic Safety Certificate
Equipment Group II, Category 1 G
Ex ia IIC T4 Ga
Harmonized Standards:
EN IEC 60079-0:2018
EN 60079-11:2012

Baseefa09ATEX0131 – Type n Certificate
Equipment Group II, Category 3 G
Ex nA IIC T4 Gc
Harmonized Standards:
EN 60079-0:2012 +A11:2013
EN 60079-15:2010

*A review against EN IEC 60079-0:2018 which is harmonized, shows no significant changes relevant to this equipment so EN 60079-0:2012+A11:2013 continues to represent "State of the Art".

Page 2 of 3

EMERSON

EU Declaration of Conformity

No: RMD 1077 Rev. J

ATEX Notified Body

SGS FIMKO OY [Notified Body Number: 0598]
Takomotie 8
00380 HELSINKI
Finland

ATEX Notified Body for Quality Assurance

SGS FIMKO OY [Notified Body Number: 0598]
Takomotie 8
00380 HELSINKI
Finland

Page 3 of 3

14.18

含有China RoHS管控物质超过最大浓度限值的部件型号列表 Rosemount 775
List of Rosemount 775 Parts with China RoHS Concentration above MCVs

部件名称 Part Name	有害物质 / Hazardous Substances					
	铅 Lead (Pb)	汞 Mercury (Hg)	镉 Cadmium (Cd)	六价铬 Hexavalent Chromium (Cr +6)	多溴联苯 Polybrominated biphenyls (PBB)	多溴联苯醚 Polybrominated diphenyl ethers (PBDE)
电子组件 Electronics Assembly	X	O	O	O	O	O
壳体组件 Housing Assembly	O	O	O	X	O	O

本表格系依据SJ/T11364的规定而制作.
This table is proposed in accordance with the provision of SJ/T11364.

O: 意为该部件的所有均质材料中该有害物质的含量均低于GB/T 26572所规定的限量要求.
O: Indicate that said hazardous substance in all of the homogeneous materials for this part is below the limit requirement of GB/T 26572.

X: 意为在该部件所使用的所有均质材料里，至少有一类均质材料中该有害物质的含量高于GB/T 26572所规定的限量要求.
X: Indicate that said hazardous substance contained in at least one of the homogeneous materials used for this part is above the limit requirement of GB/T 26572.

Quick Start Guide
00825-0100-4075, Rev. GH
May 2023

For more information: **Emerson.com**

©2023 Emerson. All rights reserved.

Emerson Terms and Conditions of Sale are available upon request. The Emerson logo is a trademark and service mark of Emerson Electric Co. Rosemount is a mark of one of the Emerson family of companies. All other marks are the property of their respective owners.

ROSEMOUNT™

EMERSON™