Quick Start Guide
00825-0700-4410, Rev AG
August 2024

Emerson Wireless 781S Smart Antenna

ROSEMOUNT™

EMERSON.

Safety messages

NOTICE

This guide provides basic guidelines for the Emerson Wireless 781S Smart Antenna. It does not provide instructions for diagnostics, maintenance, service, or troubleshooting. Refer to the Emerson Wireless 1410S Gateway and 781S Smart Antenna Reference Manual for more information and instructions. The manuals and this guide are available electronically on Emerson.com.

⚠ WARNING

Failure to follow these installation guidelines could result in death or serious injury.

Ensure only qualified personnel perform the installation.

⚠ WARNING

Explosions could result in death or serious injury.

Installation of the transmitters in a hazardous environment must be in accordance with the appropriate local, national, and international standards, codes, and practices. Kindly review the Product Certifications section for any restrictions associated with a safe installation.

⚠ WARNING

Electrical shock could cause death or serious injury.

Avoid contact with the leads and terminals. High voltage that may be present on leads can cause electrical shock.

⚠ WARNING

Physical access

Unauthorized personnel may potentially cause significant damage to and/or misconfiguration of end users' equipment. This could be intentional or unintentional and needs to be protected against.

Physical security is an important part of any security program and fundamental in protecting your system. Restrict physical access by unauthorized personnel to protect end users' assets. This is true for all systems used within the facility.

NOTICE

This device complies with Part 15 of the Federal Communication Commission (FCC) Rules. Operation is subject to the following conditions:

This device may not cause harmful interference.

This device must accept any interference received, including interference that may cause undesired operation.

This device must be installed to ensure a minimum antenna separation distance of 8 in. (20 cm) from all persons.

Contents

Wireless planning....5
Intended use....7
Best practices.... 8
Physical installation.... 9
Legacy 781S installation....13
Verify operation....16
Product certifications.... 17

1 Wireless planning

For detailed guidance on *Wireless*HART® network planning, see Emerson white paper System Engineering Guidelines IEC 62591 *Wireless*HART.

1.1 Power up sequence

For a simpler and faster network installation, first install the Emerson Wireless Smart Antenna and wireless inputs and outputs and make sure they are functioning properly. Next, power up wireless field devices in order of proximity from the antenna, beginning with the closest.

1.2 Antenna location

Mount the antenna in a location that allows convenient access to the host system network (wireless inputs/outputs) as well as the wireless field device network.

Figure 1-1: Antenna mounting location

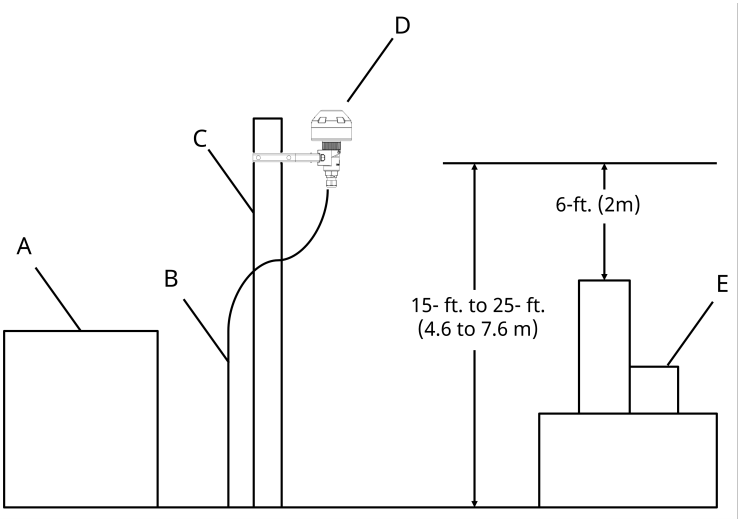

A. Control room
B. RS-485 cable
C. Mast or pipe for mounting
D. Emerson Wireless 781S Smart Antenna
E. Infrastructure

1.3 Antenna position

Position the Emerson 781S Smart Antenna vertically and approximately 3 ft. (1 m) from large structures, buildings, or conductive surfaces to allow for clear communication to other devices.

If installing multiple antennas, it is important that the antennas have 3 ft. (1 m) of horizontal separation from one another.

Figure 1-2: Antenna position

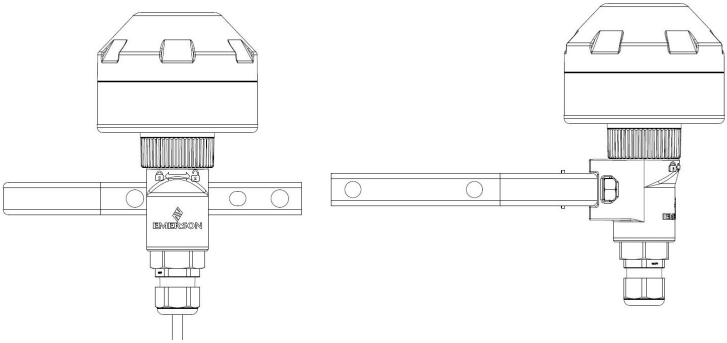

2 Intended use

2.1 System architecture

The 781S Smart Antenna was designed for use with the Emerson 1410S Gateway and should only be connected to the Emerson 1410S and/or other Emerson Gateway products. The 1410S Gateway provides the network manager for the *Wireless*HART® devices or ISA100 devices connected to the Gateway.

The 781S Smart Antenna then functions as the communication point between the 1410S and wireless field devices.

Figure 2-1: Example system architecture

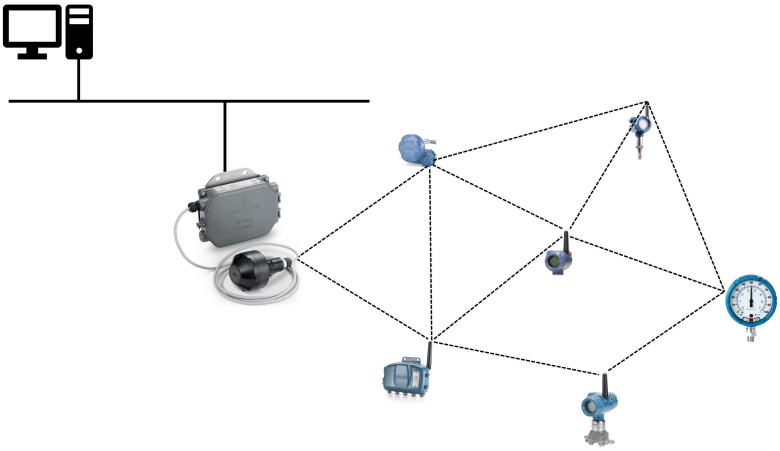

3 Best practices

3.1 Cable guidelines

Twisted shielded pair cable is generally used to wire the serial connection to the Gateway. Communication cable between 1410S and 781S must be Belden™ 3084A or cable with equivalent electrical specifications to Belden 3084A to ensure that all product certifications are met during operation.

Alternate cable can be used if the following are met according to the Canadian Electrical Code Part 1, the National Electrical Code (ANSI/NFPA 70), EN/IEC 60079-14, or local regulation requirements and installed by qualified individuals.

- Total capacitance and inductance must match product certification entity parameters for proper installation. Reference certificate ordered and Emerson installation drawing 01410-1300 for specific entity parameters.

3.2 Electrical surge

In installations with extreme electrical noise or significant historical electrical noise, consider using lightning and/or surge arrestors within the installation between the 1410S and 781S. Always ensure to adhere to all product certification requirements ordered with the product.

Typical installation does not require additional lightning and/or surge protection.

3.3 Physical installation best practices

Install the 781S Smart Antenna in a central location of the wireless field network so that it has the most direct connections to wireless devices as possible.

4 Physical installation

See Legacy 781S installation for installation a legacy design 781S Smart Antenna.

4.1 Mount the antenna to a pipe

Procedure

1. Insert U-bolt around 2-in. pipe or mast, through the saddle, through the L-shaped bracket, and through the washer plate.
2. Use a ½-in. socket-head wrench to fasten the nuts to the U-bolt.
3. Secure the antenna to the L-shaped bracket with a 5/16-18 x 1-¼ in., aligning the prongs from the 781S lower housing with the L-shaped bracket.
4. Use a 5/16-in. wrench to tighten the screw into the housing.

⚠ CAUTION

Using longer bolts other than provided by Emerson will potentially damage device housing. Mounting bolt to be 5/16-18 x 1-¼ in. used in conjunction with bracket and washer. Maximum torque to be 60 in-lb.

Figure 4-1: Mounting

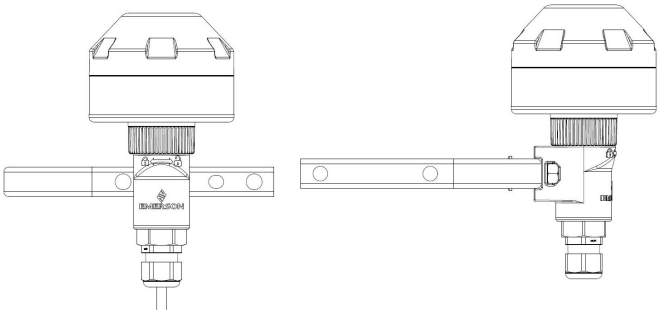

4.2 Connect to power and data

The Emerson 781S has a terminal block in lower housing of the antenna. Remove the lower housing to expose the terminals for connecting the cable between the 781S and 1410S. Use industrial grade cable suitable for hazardous environments such as Belden™

3084A or cable with electrical specifications equivalent to Belden 3084A.

Note

The 781S data and power conductors are part of separate intrinsically safe circuits. Follow requirements of the Canadian Electrical Code Part 1, the National Electrical Code (ANSI/NFPA 70), or IEC 60079-14 as applicable.

Procedure

1. If using a cable gland, make sure to loosen the cable gland such that the cable is able to freely rotate inside the cable gland.
2. Loosen collar on 781S lower housing and remove lower housing to expose the power and communications terminals on the 781S.
3. On the 781S terminals, connect the positive power lead to the '+' power terminal and the negative power lead to the '-' terminal.
4. On the 781S terminals, connect the data A conductor lead to the 'A' terminal and the data B conductor lead to the 'B' terminal.
5. Tape back shield wire and foils or cut shield wire entirely. Shield wire is only to be connected at the 1410S to prevent potential for a grounding loop to be introduced during operation.
6. On the 1410S terminals, connect the positive power lead to the '+' power terminal and the negative power lead to the '-' terminal.
7. On the 1410S terminals, connect the data A conductor lead to the 'A (+)' terminal and the data B conductor lead to the 'B (-)' terminal.
8. On the 1410S terminals, connect the shield wire to the middle 'S' shield terminal.
9. If connecting multiple antennas, repeat this process for the second antenna, using the second set of 781S terminals on the 1410S.
10. Re-install cable gland to 781S lower housing. Ensure that cable gland and the 781S lower housing collar are fully engaged to prevent moisture ingress. If using conduit, mount the 781S first before attaching the conduit. Use wrench flats on the 781S lower housing collar when torquing the cable gland or conduit. Do not apply excessive force to any other part of the 781S.

⚠ WARNING

The 781S Smart Antenna data communication terminals A (+) and B (-) must never be connected directly to a power supply. Doing so may damage the device.

After removing the terminal block cover, the communication terminals (Data A and Data B) are on the left side of the terminal block. Connecting these terminals to anything other than the corresponding data terminals of the 1410S or 1410D Gateway may damage the 781S Smart Antenna.

Figure 4-2: 781S lower housing wrench flats identifier

Figure 4-3: Emerson Wireless 781S Wiring Diagram for non-hazardous area 781S installations

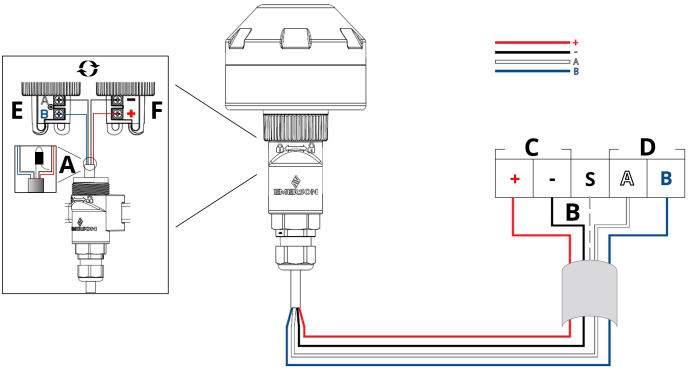

A. Tape back or cut cabling shield wire and foils at 781S side
B. Connect 781S cabling shield wire at 1410S shield terminal ("S" terminal)
C. 1410S power output
D. 1410S RS-485 comm output
E. 781S power input
F. 781S RS-485 comm input[1]

(1) *RS-485 communication terminals must never be connected directly to a power supply. See warning above.*

5 Legacy 781S installation

5.1 Verify type of 781S being installed

Verify that the 781S being installed is the legacy design. See Figure 5-1 for determining which is the legacy 781S design.

If confirmed legacy design, proceed to Section 5.2 for installation guidance. If 781S is the latest design, return to Section 3 for installation guidance.

Figure 5-1: Legacy 781S design (left) and latest 781S design (right)

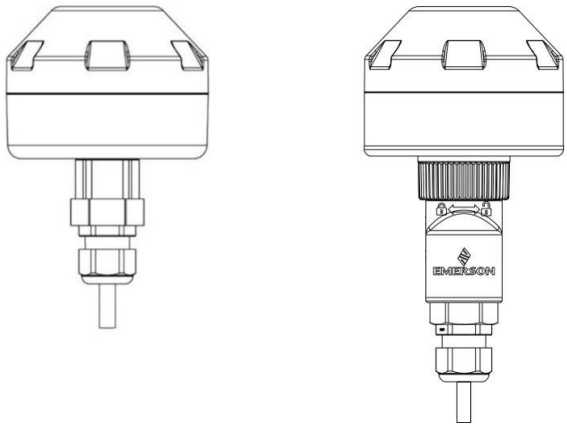

5.2 Mount the antenna to a pipe

Procedure

1. Insert U-bolt around 2-in. pipe or mast, through the saddle, through the L-shaped bracket, and through the washer plate.
2. Use a ½-in. socket-head wrench to fasten the nuts to the U-bolt.
3. Secure the antenna to the L-shaped bracket with a 5/16-in. threaded bolt.
4. Use a 5/16-in. wrench to tighten the screw into the housing.

Figure 5-2: Mounting

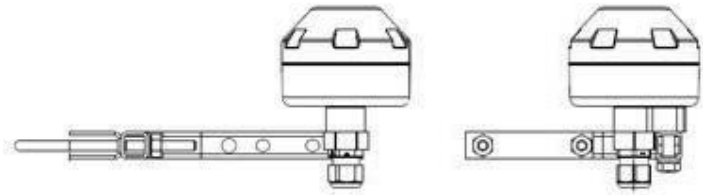

5.3 Connect to power and data

The legacy Emerson 781S is completely prewired and only needs to be connected and powered on the Gateway end. The housing is permanently sealed on the legacy Emerson 781S.

Prerequisites

If operating with more than one antenna, it is important the antenna is always connected to the antenna terminal connection 1 port.

Procedure

1. Connect the positive power lead to the “+” power terminal and the negative power lead to the “–” terminal.
2. Connect the data + lead to the “A (+)” terminal and the data – lead to the “B (–)” terminal.
3. Connect the grounding wire to the Gateway’s shield connection.
4. If connecting multiple antennas, repeat this process for terminal connection 2.

Figure 5-3: Wiring guide

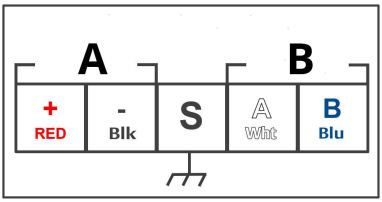

A. Power
B. Data

Red	Positive

Blk (Black)	Negative
Wht (White)	RS-485 comm A
Blu (Blue)	RS-485 comm B

Figure 5-4: Emerson Wireless 781S

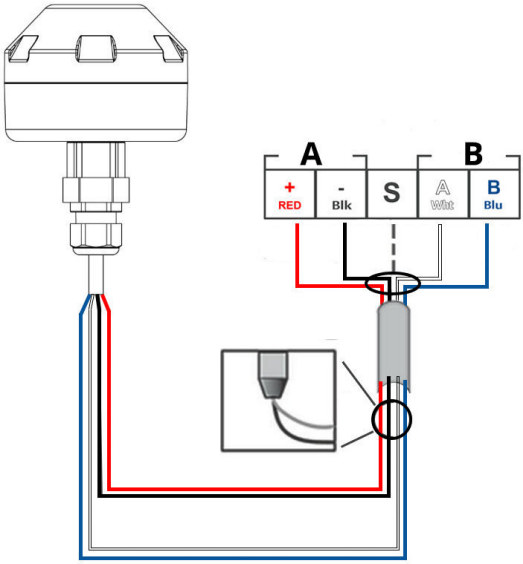

A. Power output
B. RS-485 comm

6 Verify operation

6.1 Verify antenna's operation through Gateway

The antenna has no exterior lights or LCD displays. Therefore, once it is powered up through the Gateway, you must verify its operation through the Gateway.

6.2 Power up sequence

The second and third LEDs in the Emerson 1410S correlate to the first and second terminal connections. These lights should be green when the antenna is connected properly.

6.3 Normal operation

You can assess the operation of the 781S Smart Antenna within the Gateway user interface.

To see the connection, allow the link to be seen as a field device in the ***System Settings*** menu. To verify operation, attempt to connect to a device.

7 Product certifications

Rev 2.5

7.1 European Directive Information

A copy of the EU Declaration of Conformity can be found at the end of the Quick Start Guide. The most recent revision of the EU Declaration of Conformity can be found at Emerson.com.

7.2 Telecommunication compliance

All wireless devices require certification to ensure they adhere to regulations regarding the use of the radio frequency (RF) spectrum. Nearly every country requires this type of product certification.

Emerson is working with governmental agencies around the world to supply fully compliant products and remove the risk of violating country directives or laws governing wireless device usage.

7.3 Federal Communications Commission (FCC) and Industry Canada (IC)

This device complies with Part 15 of the FCC Rules.

Operation is subject to the following conditions:

- This device may not cause harmful interference; this device must accept any interference received, including interference that may cause undesired operation.
- **This device must be professionally installed.**
- **This device must be used with 25 feet of cable.**
- This device must be installed to ensure a minimum antenna separation distance of 7.9 in. (20 cm) from all persons.

This device contains licence-exempt transmitter(s)/receiver(s) that comply with Innovation, Science and Economic Development

Canada's licence-exempt RSS(s) Operation is subject to the following two conditions:

1. This device may not cause interference.
2. This device must accept any interference, including interference that may cause undesired operation of the device.

Changes or modification to the equipment not expressly approved by Emerson could void the user's authority to operate the equipment.

This radio transmitter 2731A-781S58 has been approved by Innovation, Science and Economic Development Canada to operate with the antenna types listed below, with the maximum permissible gain indicated. Antenna types not included in this list that have a gain greater than the maximum gain indicated for any type listed are strictly prohibited for use with this device.

Cet émetteur radio 2731A-781S58 a été approuvé par Innovation, Sciences et Développement économique Canada pour fonctionner avec les types d'antennes répertoriés ci-dessous, avec le gain maximum autorisé indiqué. Les types d'antennes non inclus dans cette liste qui ont un gain supérieur au gain maximum indiqué pour tout type répertorié sont strictement interdits pour une utilisation avec cet appareil.

Approved Antennas:
Integral Monopole (2dBi)
Dipole (8dBi)
Yagi (14.5dBi)
Dipole (15dBi)
Panel (18dBi)
Sector (20dBi)

L'émetteur/récepteur exempt de licence contenu dans le présent appareil est conforme aux CNR d'Innovation, Sciences et Développement économique Canada applicables aux appareils radio exempts de licence. L'exploitation est autorisée aux deux conditions suivantes :

1. Cet appareil ne doit pas provoquer d'interférences.
2. Cet appareil doit accepter toute interférence, y compris les interférences pouvant causer un mauvais fonctionnement du dispositif.

Les changements ou les modifications apportés à l'équipement qui n'est pas expressément approuvé par Emerson pourraient annuler l'autorité de l'utilisateur à utiliser cet équipement.

7.4 Ordinary location certification

As standard, the transmitter has been examined and tested to determine that the design meets the basic electrical, mechanical, and fire protection requirements by a Nationally Recognized Test Laboratory (NRTL), as accredited by the Federal Occupational Safety and Health Administration (OSHA).

7.5 Installing equipment in North America

The US National Electrical Code® (NEC) and the Canadian Electrical Code (CEC) permit the use of Division marked equipment in Zones and Zone marked equipment in Divisions. The markings must be suitable for the area classification, gas, and temperature class. This information is clearly defined in the respective codes.

7.6 USA

I5 USA Intrinsic Safety

Certificate	80011679
Markings	Class I, II, III Division 1 Groups A, B, C, D, E, F, G T4; Class I, II, III Division 2, Groups A, B, C, D, F, G T4 T4 (–40 °C ≤ T_a ≤ +70 °C); Class I Zone 0, AEx ia IIC T4 Ga; Class I Zone 2, AEx ic IIC T4 Gc
Standards	FM 3600: 2011, FM 3610: 2018, FM 3611: 2018, ANSI/UL 60079-0: 2019, ANSI/UL 60079-11: 2014

Warnings/Conditions of Acceptability

1. Installed as per Control drawing 01410-1300 for Hazardous and Non-Hazardous areas.
2. Must be installed with a resistive barrier.

3. The plastic enclosure may constitute a potential electrostatic ignition risk and must not be rubbed or cleaned with a dry cloth.
4. The measured capacitance between the equipment enclosure and metallic conduit adapter is 21pF. This must be considered only when the Model 781S is integrated into a system where the process connection is not grounded.
5. The aluminum antenna adapter on the enclosure may be capable of producing incendive sparks when impacted. This equipment must be mounted and/or physically guarded such that it is not subjected to impact or friction.

7.7 Canada

I6 Canada Intrinsic Safety

Certificate 80011679

Markings Class I, II, III Division 1 Groups A, B, C, D, E, F, G T4; Class I, II, III Division 2, Groups A, B, C, D, F, G T4 T4 (–40 °C ≤ T_a ≤ +70 °C); Ex ia IIC T4 Ga; Ex ic IIC T4 Gc

Standards CAN/CSA C22.2 No 60079-0: 2019, CAN/CSA C22.2 No. 60079-11: 2014, CSA C22.2 No.213 – 2017, CSA C22.2 No. 94.2-15

Warnings

1. Installed as per Control drawing 01410-1300 for Hazardous and Non-Hazardous areas.
2. Must be installed with a resistive barrier.
3. The plastic enclosure may constitute a potential electrostatic ignition risk and must not be rubbed or cleaned with a dry cloth.
4. The measured capacitance between the equipment enclosure and metallic conduit adapter is 21pF. This must be considered only when the Model 781S is integrated into a system where the process connection is not grounded.
5. The aluminum antenna adapter on the enclosure may be capable of producing incendive sparks when impacted. This equipment must be mounted and/or physically guarded such that it is not subjected to impact or friction.

7.8 Europe

I1 ATEX Intrinsic Safety

Certificate	CSANe 21ATEX2301X
Markings	Ex ia IIC T4 Ga (–40 °C ≤ T_a ≤ +70 °C)
Standards	EN IEC 60079-0: 2018, EN 60079-11: 2012

Special Conditions for Safe Use (X):

1. Must be installed with a resistive barrier.
2. The plastic enclosure may constitute a potential electrostatic ignition risk and must not be rubbed or cleaned with a dry cloth.
3. The measured capacitance between the equipment enclosure and metallic conduit adapter is 21pF. This must be considered only when the Model 781S is integrated into a system where the process connection is not grounded.

ATEX Intrinsic Safety

Certificate	CSANe 21ATEX4302X
Markings	Ex ic IIC T4 Gc (–40 °C ≤ T_a ≤ +70 °C)
Standards	EN IEC 60079-0: 2018, EN 60079-11: 2012

Specific Conditions for Safe Use (X):

1. Must be installed with a resistive barrier.
2. The plastic enclosure may constitute a potential electrostatic ignition risk and must not be rubbed or cleaned with a dry cloth.
3. The measured capacitance between the equipment enclosure and metallic conduit adapter is 21pF. This must be considered only when the Model 781S is integrated into a system where the process connection is not grounded.
4. The aluminum antenna adapter on the enclosure may be capable of producing incendive sparks when impacted. This equipment must be mounted and/or physically guarded such that it is not subjected to impact or friction when located in Zone 0.
5. Installed as per control drawing 01410-1300 for Hazardous and Non-Hazardous areas.

7.9 International

I7 IECEx Intrinsic Safety

Certificate IECEx CSA 21.0052X

Markings Ex ia IIC T4 Ga (–40 °C ≤ T_a ≤ +70 °C), Ex ic IIC T4 Gc (–40 °C ≤ T_a ≤ +70 °C)

Standards IEC 60079-0: 2017, IEC 60079-11: 2011

Specific Conditions for Safe Use (X):

1. Must be installed with a Resistive barrier.
2. The plastic enclosure may constitute a potential electrostatic ignition risk and must not be rubbed or cleaned with a dry cloth.
3. The measured capacitance between the equipment enclosure and metallic conduit adapter is 21pF. This must be considered only when the Model 781S is integrated into a system where the process connection is not grounded.
4. The aluminum antenna adapter on the enclosure may be capable of producing incendive sparks when impacted. This equipment must be mounted and/or physically guarded such that it is not subjected to impact or friction when located in Zone 0.
5. Installed as per control drawing 01410-1300 for Hazardous and Non-Hazardous areas.

7.10 Brazil

I2 INMETRO Intrinsic Safety

Certificate UL-BR 20.1568X

Markings Ex ia IIC T4 Ga (–40 °C ≤ T_a ≤ +70 °C), Ex ic IIC T4 Gc (–40 °C ≤ T_a ≤ +70 °C)

Standards ABNT NBR IEC 60079-0: 2013, ABNT NBR IEC 60079-11: 2013

Special Conditions for Safe Use (X)

See certificate.

7.11 Japan

I4 CML Intrinsic Safety

Certificate CML20JPN2401X

Markings Ex ia IIC T4 Ga (–40 °C ≤ T_a ≤ +70 °C), Ex ic IIC T4 Gc (–40 °C ≤ T_a ≤ +70 °C)

Special Conditions for Safe Use (X)

See certificate.

7.12 Eurasian conformity

IM Intrinsic Safety

Certificate ТОО Т-Стандарт ЕАЭС KZ 7500525.01.01.00739

Markings 0Ex ia IIC T4 Ga X, 2Ex ic IIC T4 Gc X; (–40 °C ≤ T_a ≤ +70 °C)

Special Conditions for Safe Use (X)

See certificate.

7.13 China

I3 Nepsi Intrinsic Safety

Certificate GYJ21.1109X

Markings Ex ia IIC T4 Ga, Ex ic IIC T4 Gc (–40 °C ≤ T_a ≤ +70 °C)

Special Conditions for Safe Use (X)

See certificate.

7.14 Korea

IP KTL Intrinsic Safety

Certificate 21-KA4BO-0489X

Markings Ex ia IIC T4 Ga (–40 °C ≤ T_a ≤ +70 °C)

Certificate 21-KA4BO-0490X

Markings Ex ic IIC T4 Gc (–40 °C ≤ T_a ≤ +70 °C)

Special Conditions for Safe Use (X)

See certificate.

7.15 Combinations

KD Combination of I1, I5, and I6

KL Combination of I1, I5, I6, and I7

7.16 Declaration of Conformity

Emerson Wireless 781SA Smart Antenna

EMERSON.

EU DECLARATION OF CONFORMITY

CE

RMD 1155-J

This declaration of conformity is issued under the sole responsibility of

Rosemount Inc.
6021 Innovation Blvd
Shakopee, MN 55379
USA

that the following products,

Emerson Wireless 781SA Smart Antenna, WirelessHart

comply with the provisions of the European Union Directives, including the latest amendments, valid at the time this declaration was signed.

August 27, 2024 | Mark Lee | Vice President, Quality | Boulder, CO, USA

(signature & date of issue) (name) (function) (place of issue)

Authorized Representative in Europe:
Emerson S.R.L., company No. J12/88/2006
Emerson 4 street, Parcul Industrial
Tetarom II, Cluj-Napoca 400638, Romania

Regulatory Compliance Shared Services Department
Email: europeproductcompliance@emerson.com Phone: +40 374 132 035

ATEX Notified Bodies for EU Type Examination Certificates:
CSA Group Netherlands B.V. [Notified Body Number: 2813]
Takomotie 8
FI-00380 Helsinki
Finland

ATEX Notified Body for Quality Assurance:
SGS Fimko Oy [Notified Body Number: 0598]
Takomotie 8
FI-00380 Helsinki
Finland

EMC Directive (2014/30/EU)
Harmonized Standards:
EN 61326-1: 2013

RED Directive (2014/53/EU)
Harmonized Standards:
EN 300 328 V2.2.2
Other Standards:
EN 301 489-1 V2.2.3
EN 301 489-17 V3.2.4

Low Voltage (2014/35/EU)
Harmonized Standards:
EN 61010-1: 2010/AMD1:2016
EN 62311:2008

ATEX Directive (2014/34/EU)
CSANE 21ATEX2301X – Wireless Field Link
Equipment Group II, [Category 1G Ex ia IIC T4 Ga
(-40°C ≤ Ta ≤ 70°C)]
Harmonized Standards:
EN IEC 60079-0:2018
EN 60079-11:2012

CSANE 21ATEX4302X – Wireless Field Link
Equipment Group II, [Category 3G Ex ic IIC T4 Gc
(-40°C ≤ Ta ≤ 70°C)]
Harmonized Standards:
EN IEC 60079-0:2018
EN 60079-11:2012

RoHS Directive (2011/65/EU)
Harmonized Standards:
EN 63000:2018

Emerson Wireless 781SC Smart Antenna

EMERSON.

EU DECLARATION OF CONFORMITY

RMD 1156-I

This declaration of conformity is issued under the sole responsibility of

Rosemount Inc.
6021 Innovation Blvd
Shakopee, MN 55379
USA

that the following products,

Emerson Wireless 781SC Smart Antenna, ISA100

comply with the provisions of the European Union Directives, including the latest amendments, valid at the time this declaration was signed.

August 27, 2024 | Mark Lee | Vice President, Quality | Boulder, CO, USA
(signature & date of issue) (name) (function) (place of issue)

Authorized Representative in Europe:
Emerson S.R.L., company No. J12/88/2006
Emerson 4 street, Parcul Industrial
Tetarom II, Cluj-Napoca 400638, Romania

Regulatory Compliance Shared Services Department
Email: europeproductcompliance@emerson.com Phone: +40 374 132 035

ATEX Notified Bodies for EU Type Examination Certificates:
CSA Group Netherlands B.V. [Notified Body Number: 2813]
Takomotie 8
FI-00380 Helsinki
Finland

ATEX Notified Body for Quality Assurance:
SGS Fimko Oy [Notified Body Number: 0598]
Takomotie 8
FI-00380 Helsinki
Finland

EMC Directive (2014/30/EU)
Harmonized Standards:
EN 61326-1: 2013

RED Directive (2014/53/EU)
Harmonized Standards:
EN 300 328 V2.2.2
Other Standards:
EN 301 489-1 V2.2.3
EN 301 489-17 V3.2.4

Low Voltage (2014/35/EU)
Harmonized Standards:
EN 61010-1: 2010

ATEX Directive (2014/34/EU)
CSANE 21ATEX2301X – Wireless Field Link
Equipment Group II, [Category 1G Ex ia IIC T4 Ga
(-40°C ≤ Ta ≤ 70°C)]
Harmonized Standards:
EN IEC 60079-0:2018
EN 60079-11:2012

CSANE 21ATEX4302X – Wireless Field Link
Equipment Group II, [Category 3G Ex ic IIC T4 Gc
(-40°C ≤ Ta ≤ 70°C)]
Harmonized Standards:
EN IEC 60079-0:2018
EN 60079-11:2012

RoHS Directive (2011/65/EU)
Harmonized Standards:
EN 63000:2018

7.17 China RoHS table

含有China RoHS管控物质超过最大浓度限值的部件型号列表 781S
List of 781S Parts with China RoHS Concentration above MCVs

部件名称 Part Name	有害物质 / Hazardous Substances					
	铅 Lead (Pb)	汞 Mercury (Hg)	镉 Cadmium (Cd)	六价铬 Hexavalent Chromium (Cr +6)	多溴联苯 Polybrominated biphenyls (PBB)	多溴联苯醚 Polybrominated diphenyl ethers (PBDE)
电子组件 Electronics Assembly	O	O	O	O	O	O
壳体组件 Housing Assembly	O	O	O	O	O	O

SJ/T11364的规定而制作.
This table is proposed in accordance with the provision of SJ/T11364.

O: 表为该部件的所有均质材料中该有害物质的含量均低于GB/T 26572所规定的限量要求.
O: Indicate that said hazardous substance in all of the homogeneous materials for this part is below the limit requirement of GB/T 26572.

X: 表为在该部件所使用的所有均质材料里，至少有一类均质材料中该有害物质的含量高于GB/T 26572所规定的限量要求.
X: Indicate that said hazardous substance contained in at least one of the homogeneous materials used for this part is above the limit requirement of GB/T 26572.

Quick Start Guide
00825-0700-4410, Rev. AG
August 2024

For more information: **Emerson.com/global**

©2024 Emerson. All rights reserved.

Emerson Terms and Conditions of Sale are available upon request. The Emerson logo is a trademark and service mark of Emerson Electric Co. Rosemount is a mark of one of the Emerson family of companies. All other marks are the property of their respective owners.

ROSEMOUNT™

EMERSON™