Quick Start Guide
00825-0200-4708, Rev DB
February 2018

Rosemount™ 708 Wireless Acoustic Transmitter

IEC
WirelessHART

EMERSON™

NOTICE

This guide provides basic guidelines for the Rosemount 708. It does not provide instructions for detailed configuration, diagnostics, maintenance, service, troubleshooting, or installations. Refer to the Rosemount 708 Reference Manual (document number 00809-0100-4708) for more instruction. This guide and the manual are available electronically on www.rosemount.com.

⚠ WARNING

Explosions could result in death or serious injury.

- Installation of this transmitter in an explosive environment must be in accordance with the appropriate local, national, and international standards, codes, and practices. Review the Product Certifications section for any restrictions associated with a safe installation.
- Before connecting a Field Communicator in an explosive atmosphere, ensure the instruments are installed in accordance with intrinsically safe field wiring practices.

This device complies with Part 15 of the FCC Rules. Operation is subject to the following conditions:

- This device may not cause harmful interference.
- This device must accept any interference received, including interference that may cause undesired operation.
- This device must be installed to ensure a minimum antenna separation distance of 8-in. (20 cm) from all persons.

The power module may be replaced in a hazardous area. The power module has surface resistivity greater than one gigaohm and must be properly installed in the wireless device enclosure. Care must be taken during transportation to and from the point of installation to prevent a potential electrostatic charging hazard.

Polymer enclosure has surface resistivity greater than one gigaohm. Care must be taken during transportation to and from the point of installation to prevent a potential electrostatic charging hazard.

NOTICE

Shipping considerations for wireless products

The unit was shipped without the power module installed. Remove the power module prior to shipping the unit.

Each power module contains one “D” size primary lithium battery. Primary lithium batteries are regulated in transportation by the U.S. Department of Transportation, and are also covered by IATA (International Air Transport Association), ICAO (International Civil Aviation Organization), and ARD (European Ground Transportation of Dangerous Goods). It is the responsibility of the shipper to ensure compliance with these or any other local requirements. Consult current regulations and requirements before shipping.

Contents

Overview 3
Wireless considerations 3
Physical installation 4
Device network configuration 8
Verify operation. 9
Product certifications. 13

1.0 Overview

Figure 1. Rosemount 708 Wireless Acoustic Transmitter

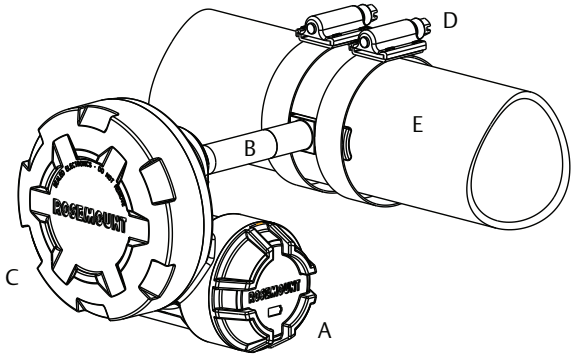

A. Power module cover — power module is inside device; unscrew cap for access
B. Waveguide — acoustic and temperature sensors
C. Electronics cover — cover is sealed and cannot be removed
D. Stainless steel mounting bands — used to connect the acoustic transmitter to the piping
E. Pipe — the acoustic transmitter is installed directly to the pipe

2.0 Wireless considerations

2.1 Power up sequence

The Emerson™ Smart Wireless Gateway should be installed and functioning properly before any wireless devices are powered. Install the power module, Smart Wireless 701PGNKF into the Rosemount 708 to power the device. This results in a simpler and faster network installation. Enabling active advertising on the Gateway ensures new devices are able to join the network faster. For more information see the Smart Wireless Gateway Manual (document number 00809-0200-4420).

2.2 Antenna position

The antenna is internal to the acoustic transmitter. To achieve optimal range, orient the transmitter with the waveguide horizontal and the power module closest to the ground as shown in Figure 2. Good connectivity can also be achieved in other orientations. The antenna should also be approximately 3 ft. (1 m) from any large structure, building, or conductive surface to allow for clear communication to other devices.

Figure 2. Antenna Position

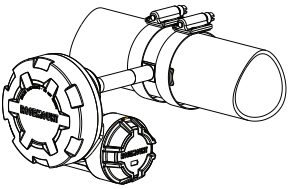

3.0 Field Communicator connections

The power module needs to be installed in the device for the Field Communicator to interface with the Rosemount 708. This transmitter uses the green power module; order model number 701PGNKF. Field communication with this device requires a HART® protocol-based Field Communicator using the correct 708 DD. Field Communicator connections are located on the power module. The power module is keyed and can only be inserted in one orientation. Refer to Figure 3 for instructions on connecting the Field Communicator to the Rosemount 708.

Figure 3. Connection Diagram

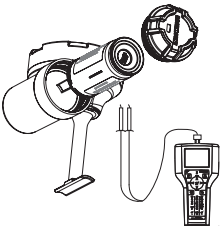

4.0 Physical installation

The acoustic transmitter is connected directly to the piping being measured.

4.1 Mounting

For high temperature mounting, see page 5.

1. Locate the Rosemount 708 on a horizontal section of piping as close as possible to the equipment to be monitored. Align the waveguide of the transmitter as shown in Figure 4 and Figure 5.
2. The mounting location should be free of foreign matter and corrosion to ensure good contact between the piping and the waveguide.
3. Tighten each clamp to 90 in-lb (10,2 N-m). Trim the excess clamp band material to prevent unwanted acoustic noise.
4. If commissioning the device, install the green power module (see Figure 6).

5. Ensure the power module cover is fully tightened to prevent moisture ingress. The lip of the polymer power module cover should be in contact with the surface of the polymer enclosure to ensure a proper seal. Do not over tighten.

Figure 4. Transmitter Alignment

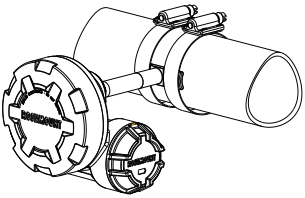

Figure 5. Transmitter Alignment Top View

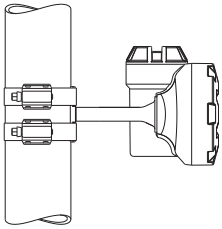

Figure 6. Power Module Installation

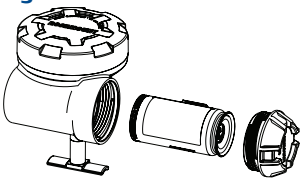

Note

Wireless devices should be powered up in order of proximity from the Smart Wireless Gateway, beginning with the closest device to the Smart Wireless Gateway. This will result in faster network formation.

4.2 Mounting in a high temperature application

High temperature mounting hardware should be used when process temperatures exceed 260 °C (500 °F).

1. Place the foot of the transmitter in between the standoff mounting hardware plates as shown in Figure 7.
2. Press standoff plates together so plates and transmitter foot are aligned.

3. Tighten each screw to 90 in-lb (10,2 N-m).
4. Locate the Rosemount 708 and high temperature mounting hardware on a horizontal section of the piping as close as possible to the equipment to be monitored. The mounting location should be free of foreign matter and corrosion to ensure good contact between the piping and the mounting hardware.
5. Insert the U-bolt through the standoff mounting hardware.
6. Tighten each bolt to 90 in-lb (10,2 N-m) (see Figure 8).
7. If commissioning the device, install the green power module (see Figure 6).
8. Ensure the power module cover is fully tightened to prevent moisture ingress. The lip of the polymer power module cover should be in contact with the surface of the polymer enclosure to ensure a proper seal. Do not over tighten.

Figure 7. High Temperature Mounting Hardware

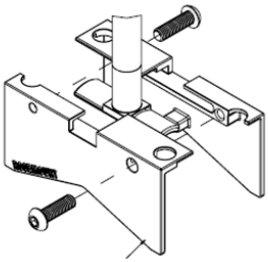

Figure 8. Rosemount 708 Acoustic Transmitter with High Temperature Standoff and Fastener Kit

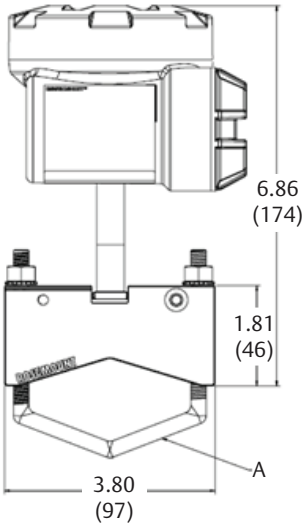

A. For pipe sizes 0.5 to 2.5-in.
Dimensions are in inches (millimeters).

4.3 Mounting considerations

1. Mounting bands should be inspected periodically and re-tightened if necessary. Some loosening may occur after initial installation due to thermal expansion/contraction.
2. The waveguide must be in direct contact with the pipe unless the high temperature mounting hardware is being used.
3. Insulate process piping to minimize ambient temperature effects (see Figure 9). Insulation thickness over the top of the waveguide foot should not exceed 1-in. (2,54 cm).
4. For best results, mount the transmitter within 6-in. (15,24 cm) of the equipment to be monitored.
5. The stainless steel mounting bands could be affected by stress corrosion and potentially fail when in the presence of chlorides.
6. The transmitter should be installed such that steam or other high temperature fluids do not directly impinge the housing of the device.
7. If installing the device on a steam trap, the device should be installed on the upstream side of the trap.

Figure 9. Piping Insulation Side View

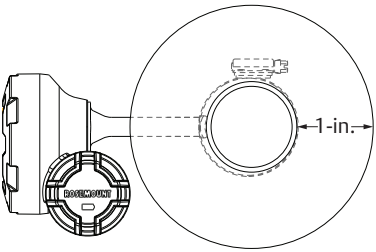

5.0 Device network configuration

In order to communicate with the Smart Wireless Gateway, and ultimately the information system, the transmitter must be configured to communicate with the wireless network. This step is the wireless equivalent of connecting wires from a transmitter to the host system. Using a Field Communicator or AMS Device Manager, enter the network ID and join key so they match the network ID and join key of the Gateway and other devices in the network. If the network ID and join key are not the same as the Gateway, the acoustic transmitter will not communicate with the network. The network ID and join key may be obtained from the Smart Wireless Gateway on the *Setup>Network>Settings* page on the web server, shown in Figure 10.

Figure 10. Gateway Network Settings

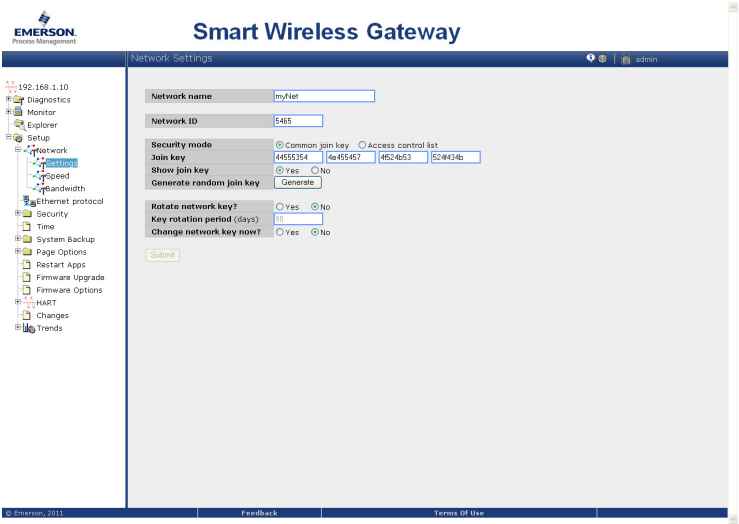

5.1 AMS Device Manager

Right click on the acoustic transmitter and select **Configure**. When the menu opens, select **Join Device to Network** and follow the method to enter the network ID and join key.

5.2 Field Communicator

The network ID and join key may be changed in the wireless device by using the following Fast Key sequence. Set both network ID and join key.

Table 1. Setting the Network ID and Join Key

Function	Fast Key sequence	Menu items
Join Device to Network	2, 1, 2	Network ID, Set Join Key

6.0 Verify operation

There are three ways to verify operation: using the Field Communicator, using the Smart Wireless Gateway's integrated web interface, or by using AMS Suite Wireless Configurator or AMS Device Manager.

If the Rosemount 708 was configured with the network ID and join key, and sufficient time has passed, the transmitter will be connected to the network. If network ID and join key were not configured, reference "Troubleshooting" on page 11.

Note
It may take several minutes for the device to join the network.

6.1 Field Communicator

For HART protocol Wireless transmitter communication, a Rosemount 708 Device Driver (DD) is required. To obtain the latest DD, visit the Emerson Process Management Easy Upgrade site at: http://www2.emersonprocess.com/en-US/documentation/deviceinstallkits. The communication status may be verified in the wireless device using the following Fast Key sequence.

Table 2. Communication Status Verification Fast Key Sequence

Function	Fast Key sequence	Menu items
Communications	3, 4	Join Status, Wireless Mode, Join Mode, Number of Available Neighbors, Number of Advertisements Heard, Number of Join Attempts

6.2 Smart Wireless Gateway

Using the Smart Wireless Gateway's integrated web interface, navigate to the Explorer page as shown in Figure 11. Locate the device in question and verify all status indicators are good (green).

Figure 11. Smart Wireless Gateway Explorer Page

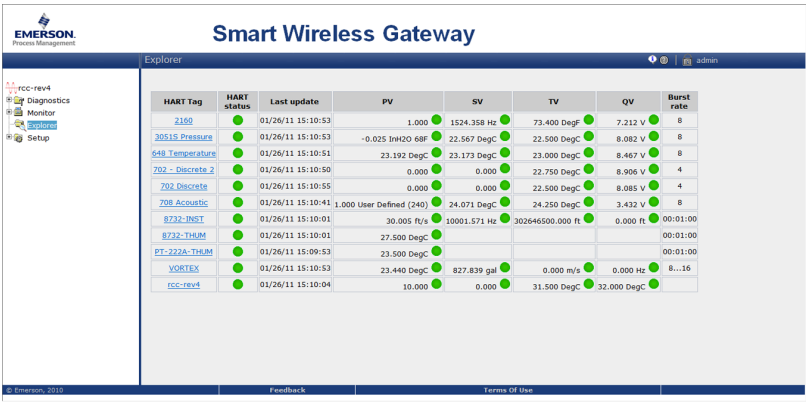

HART Tag	HART status	Last update	PV	SV	TV	QV	Burst rate
2160		01/26/11 15:10:53	1.000	1524.358 Hz	73.400 DegF	7.212 V	8
3051S Pressure		01/26/11 15:10:53	-0.025 InH2O 68F	22.567 DegC	22.500 DegC	8.082 V	8
648 Temperature		01/26/11 15:10:51	23.192 DegC	23.173 DegC	23.000 DegC	8.467 V	8
702 - Discrete 2		01/26/11 15:10:50	0.000	0.000	22.750 DegC	8.906 V	4
702 Discrete		01/26/11 15:10:55	0.000	0.000	22.500 DegC	8.085 V	4
708 Acoustic		01/26/11 15:10:41	1.000 User Defined (240)	24.071 DegC	24.250 DegC	3.432 V	8
8732-INST		01/26/11 15:10:01	30.005 ft/s	10001.571 Hz	302646500.000 ft	0.000 ft	00:01:00
8732-THUM		01/26/11 15:10:01	27.500 DegC				00:01:00
PT-222A-THUM		01/26/11 15:09:53	23.500 DegC				00:01:00
VORTEX		01/26/11 15:10:53	23.440 DegC	827.839 gal	0.000 m/s	0.000 Hz	8...16
rcc-rev4		01/26/11 15:10:04	10.000	0.000	31.500 DegC	32.000 DegC	

6.3 AMS Suite Wireless Configurator

When the device has joined the network, it will appear in the Device Manager as illustrated in Figure 12. For HART protocol Wireless transmitter communication, a 708 DD is required. To obtain the latest DD, visit the Emerson Process Management Easy Upgrade site at: http://www2.emersonprocess.com/en-US/documentation/deviceinstallkits.

Figure 12. Device Manager

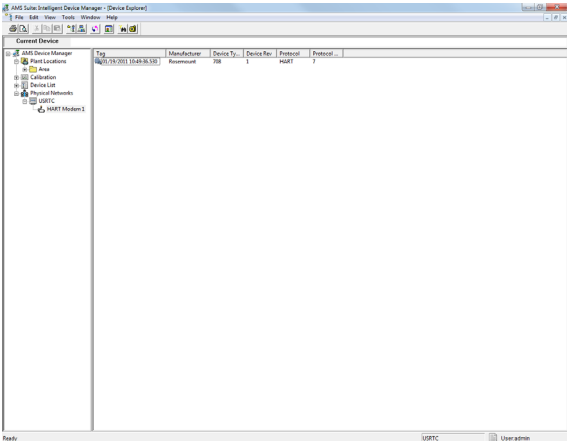

Note

SteamLogic™ software is provided for viewing steam trap status. Refer to the manual on the CD for more information.

6.4 Troubleshooting

If the device is not joined to the network after power up, verify the correct configuration of the network ID and join key, and that active advertising has been enabled on the Smart Wireless Gateway. The network ID and join key in the device must match the network ID and join key of the Gateway.

The network ID and join key may be obtained from the Gateway on the *Setup>Network>Settings* page of the web server (see Figure 13 on page 11). The network ID and join key may be changed in the wireless device by following the Fast Key sequence shown below.

Table 3. Changing Network ID and Join Key Fast Key Sequence

Function	Fast Key sequence	Menu items
Join Device to Network	2, 1, 2	Network ID, Set Join Key

Figure 13. Smart Wireless Gateway Network Settings

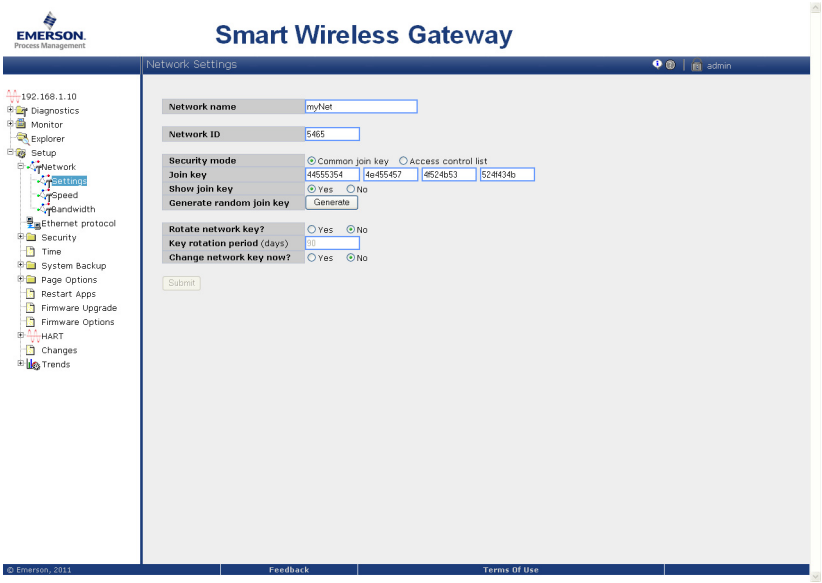

6.5 Field Communicator use

Note
In order to communicate with a Field Communicator, power the Rosemount 708 by connecting the power module. For more information on the power module, refer to the Product Data Sheet (document number 00813-0100-4701).

Table 4 includes Fast Key sequences frequently used to interrogate and configure the device. For additional information, refer to the Rosemount 708 Reference Manual (document number 00809-0100-4708).

Table 4. Rosemount Fast Key Sequence

Function	Fast Key sequence	Menu items
Device Information	2, 2, 5	Tag, Long Tag, Descriptor, Message, Date, Country, SI Unit Control
Guided Setup	2, 1	Basic Setup, Join Device to Network, Configure Update Rates, Alert Setup
Manual Setup	2, 2	Wireless, Sensor, HART, Security, Device Information, Power
Wireless	2, 2, 1	Network ID, Join Device to Network, Broadcast Information

Figure 14. Field Communicator Connections

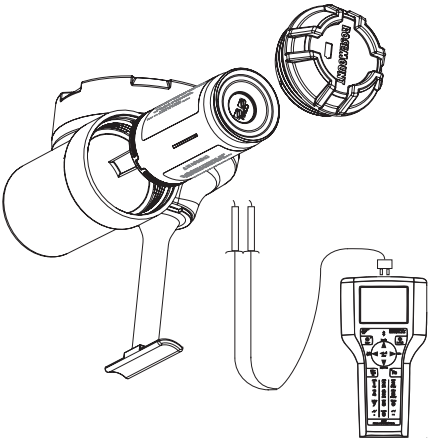

Product Certifications – 708 Wireless Acoustic Transmitter

Rev: 2.4

European Directive Information

Telecommunication compliance

All wireless devices require certification to ensure that they adhere to regulations regarding the use of the RF spectrum. Nearly every country requires this type of product certification. Emerson is working with governmental agencies around the world to supply fully compliant products and remove the risk of violating country directives or laws governing wireless device usage.

FCC and IC

This device complies with Part 15 of the FCC Rules. Operation is subject to the following conditions: This device may not cause harmful interference; this device must accept any interference received, including interference that may cause undesired operation. This device must be installed to ensure a minimum antenna separation distance of 20 cm from all persons.

Changes or modification to the equipment not expressly approved by Rosemount, Inc. could void the user's authority to operate the equipment.

This device contains licence-exempt transmitter(s)/receiver(s) that comply with Innovation, Science and Economic Development Canada's licence-exempt RSS(s). Operation is subject to the following two conditions: This device may not cause interference. This device must accept any interference, including interference that may cause undesired operation of the device.

Cet appareil est conforme à la norme RSS-247 Industrie Canada exempt de licence. Son fonctionnement est soumis aux deux conditions suivantes: (1) cet appareil ne doit pas provoquer d'interférences et (2) cet appareil doit accepter toute interférence, y compris les interférences pouvant causer un mauvais fonctionnement du dispositif.

Ordinary Location Certification

As standard, the transmitter has been examined and tested to determine that the design meets the basic electrical, mechanical, and fire protection requirements by a nationally recognized test laboratory (NRTL) as accredited by the Federal Occupational Safety and Health Administration (OSHA).

Installing in North America

The US National Electrical Code (NEC) and the Canadian Electrical Code (CEC) permit the use of Division marked equipment in Zones and Zone marked equipment in Divisions. The markings must be suitable for the area classification, gas, and temperature class. This information is clearly defined in the respective codes.

USA

I5 U.S.A. Intrinsically Safe (IS)
Certificate: (FM) 3043245
Standards: FM Class 3600 – 1998, FM Class 3610 – 2010, FM Class 3810 – 2005, NEMA 250 – 2003, ANSI/IEC 60529 - 2004

Markings: IS CL I, DIV 1, GP A, B, C, D T4;
CL 1, Zone 0 AEx ia IIC T4;
T4(-40°C ≤ Ta ≤ +70°C) when installed per Rosemount drawing 00708-1000;
Type 4X

Special Conditions for Safe Use (X):

1. The 708 Wireless acoustic Transmitter shall only be used with the 701PGNKF Rosemount Smartpower Battery Pack
2. Potential Electrostatic charging Hazard – See Instructions

Canada

I6 Canada Intrinsically Safe
Certificate: (CSA) 2439890
Standards: CAN/CSA C22.2 No. 0-M91, CAN/CSA C22.2 No. 94-M91, CSA Std C22.2 No. 142-M1987, CSA Std C22.2 No. 157-92, CSA Std C22.2 No. 60529:05
Markings: I.S. CL I, DIV 1, GP A, B, C, D when installed per Rosemount drawing 00708-1001; T3C; Type 4X

Europe

I1 ATEX Intrinsic Safety
Certificate: Baseefa11ATEX0174X
Standards: EN 60079-0: 2012, EN 60079-11: 2012
Markings: Ex II 1 G Ex ia IIC T4 Ga, T4(-40°C ≤ Ta ≤ +70°C)

Special Conditions for Safe Use (X):

1. The plastic enclosure of the Model 708 may constitute a potential electrostatic ignition risk and must not be rubbed or cleaned with a dry cloth.
2. The Model 701PGNKF Power Module may be replaced in a hazardous area. The power module has a surface resistivity greater than 1GΩ and must be properly installed in the wireless device enclosure. Care must be taken during transportation to and from the point of installation to prevent electrostatic charge build-up.

International

I7 IECEx Intrinsic Safety
Certificate: IECEx BAS 11.0091X
Standards: IEC 60079-0: 2011, IEC 60079-11: 2011
Markings: Ex ia IIC T4 Ga, T4(-40°C ≤ Ta ≤ +70°C)

Special Conditions for Safe Use (X):

1. The plastic enclosure of the Model 708 may constitute a potential electrostatic ignition risk and must not be rubbed or cleaned with a dry cloth.

Brazil

I2 INMETRO Intrinsic Safety
Certificate: UL-BR 16.0128X
Standards: ABNT NBR IEC 60079-0:2008 + Errata 1:2011, ABNT NBR IEC 60079-11:2009
Markings: Ex ia IIC T4 Ga, T4(-40°C ≤ Ta ≤ +70°C)

Special Conditions for Safe Use (X):

See certificate for special conditions

China

I3 China Intrinsic Safety
Certificate:GYJ18.1479X
Standards: GB3836.1-2010, GB3836.4-2010, GB3836.20-2010

Markings: Ex ia IIC Ga T4, -40 ~ +70°C

Special Conditions for Safe Use (X):
See certificate for special conditions

Japan

I4 TIIS Intrinsic Safety
Certificate: TC20395
Markings: Ex ia IIC T4 X (–20 ~ +60 °C)
Special Conditions for Safe Use (X):
See certificate for special conditions

EAC – Belarus, Kazakhstan, Russia

IM Technical Regulation Customs Union (EAC) Intrinsic Safety
Certificate: RU C-US.Gb05.B.00643
Markings: 0Ex ia IIC T4 Ga X
T4 (-40°C ≤ T_a ≤+70°C)

Special Conditions for Safe Use (X):
See certificate for special conditions

Korea

IP Korea Intrinsic Safety
Certificate: 13-KB4BO-0145X
Markings: Ex ia IIC T4
T4 (-40°C ≤ T_a ≤+70°C)

Special Conditions for Safe Use (X):
See certificate for special conditions

Figure 15. Rosemount 708 Declaration of Conformity

EMERSON

EU Declaration of Conformity

No: RMD 1084 Rev. G

We,

Rosemount, Inc.
8200 Market Boulevard
Chanhassen, MN 55317-9685
USA

declare under our sole responsibility that the product,

Rosemount 708 Wireless Acoustic Transmitter

manufactured by,

Rosemount, Inc.
8200 Market Boulevard
Chanhassen, MN 55317-9685
USA

to which this declaration relates, is in conformity with the provisions of the European Union Directives, including the latest amendments, as shown in the attached schedule.

Assumption of conformity is based on the application of the harmonized standards and, when applicable or required, a European Union notified body certification, as shown in the attached schedule.

	Vice President of Global Quality
(signature)	(function)
Chris LaPoint	May 24, 2017
(name)	(date of issue)

Page 1 of 3

EMERSON

EU Declaration of Conformity

No: RMD 1084 Rev. G

EMC Directive (2014/30/EU)

Harmonized Standards:
EN 61326-1: 2013
EN 61326-2-3: 2013

Radio Equipment Directive (RED) (2014/53/EU)

Harmonized Standards:
EN 300 328 V2.1.1
EN 301 489-1 V2.2.0
EN 301 489-17 V3.2.0
EN 61010-1: 2010
EN 62479: 2010

ATEX Directive (2014/34/EU)

Baseefa11ATEX0174X – Intrinsic Safety Certificate
Equipment Group II, Category 1 G
Ex ia IIC T4 Ga
Harmonized Standards:
EN 60079-0: 2012
EN 60079-11: 2012

EU Declaration of Conformity

No: RMD 1084 Rev. G

ATEX Notified Body

SGS Baseefa Limited[Notified Body Number: 1180]
Rockhead Business Park
Staden Lane
Buxton, Derbyshire SK17 9RZ
United Kingdom

ATEX Notified Body for Quality Assurance

SGS Baseefa Limited [Notified Body Number: 1180]
Rockhead Business Park
Staden Lane
Buxton, Derbyshire SK17 9RZ
United Kingdom

含有China RoHS管控物质超过最大浓度限值的部件型号列表 Rosemount 708
List of Rosemount 708 Parts with China RoHS Concentration above MCVs

部件名称 Part Name	有害物质 / Hazardous Substances					
	铅 Lead (Pb)	汞 Mercury (Hg)	镉 Cadmium (Cd)	六价铬 Hexavalent Chromium (Cr +6)	多溴联苯 Polybrominated biphenyls (PBB)	多溴联苯醚 Polybrominated diphenyl ethers (PBDE)
电子组件 Electronics Assembly	X	O	O	O	O	O
传感器组件 Sensor Assembly	X	O	O	O	O	O

本表格系依据SJ/T11364的规定而制作.
This table is proposed in accordance with the provision of SJ/T11364.

O: 意为该部件的所有均质材料中该有害物质的含量均低于GB/T 26572所规定的限量要求.
O: Indicate that said hazardous substance in all of the homogeneous materials for this part is below the limit requirement of GB/T 26572.

X: 意为在该部件所使用的所有均质材料里，至少有一类均质材料中该有害物质的含量高于GB/T 26572所规定的限量要求.
X: Indicate that said hazardous substance contained in at least one of the homogeneous materials used for this part is above the limit requirement of GB/T 26572.

00825-0200-4708

Quick Start Guide
00825-0200-4708, Rev DB
February 2018

Global Headquarters
Emerson Automation Solutions
6021 Innovation Blvd.
Shakopee, MN 55379, USA
+1 800 999 9307 or +1 952 906 8888
+1 952 949 7001
RFQ.RMD-RCC@Emerson.com

North America Regional Office
Emerson Automation Solutions
8200 Market Blvd.
Chanhassen, MN 55317, USA
+1 800 999 9307 or +1 952 906 8888
+1 952 949 7001
RMT-NA.RCCRFQ@Emerson.com

Latin America Regional Office
Emerson Automation Solutions
1300 Concord Terrace, Suite 400
Sunrise, FL 33323, USA
+1 954 846 5030
+1 954 846 5121
RFQ.RMD-RCC@Emerson.com

Europe Regional Office
Emerson Automation Solutions
Neuhofstrasse 19a P.O. Box 1046
CH 6340 Baar
Switzerland
+41 (0) 41 768 6111
+41 (0) 41 768 6300
RFQ.RMD-RCC@Emerson.com

Asia Pacific Regional Office
Emerson Automation Solutions
1 Pandan Crescent
Singapore 128461
+65 6777 8211
+65 6777 0947
Enquiries@AP.Emerson.com

Middle East and Africa Regional Office
Emerson Automation Solutions
Emerson FZE P.O. Box 17033
Jebel Ali Free Zone - South 2
Dubai, United Arab Emirates
+971 4 8118100
+971 4 8865465
RFQ.RMTMEA@Emerson.com

Linkedin.com/company/Emerson-Process-Management

Twitter.com/Rosemount_News

Facebook.com/Rosemount

Youtube.com/user/RosemountMeasurement

Google.com/+RosemountMeasurement

Standard Terms and Conditions of Sale can be found at
www.Emerson.com/en-us/pages/Terms-of-Use.aspx
The Emerson logo is a trademark and service mark of Emerson Electric Co.
SmartPower, SteamLogic, Rosemount, and Rosemount logotype are trademarks of Emerson Process Management.
HART is a registered trademark of the FieldComm Group.
National Electrical Code is a registered trademark of National Fire Protection Association, Inc.
All other marks are the property of their respective owners.
© 2018 Emerson Process Management. All rights reserved.

ROSEMOUNT™

EMERSON™