Reference Manual
00809-0100-4102, Rev AA
May 2013

Rosemount 2051 Wireless Pressure Transmitters

Pressure, Level, and Flow Solutions with WirelessHART™ Protocol

IEC

WirelessHART

ROSEMOUNT

EMERSON.
Process Management

Rosemount 2051 Wireless Pressure, Flow, and Level Solutions

⚠ WARNING

Read this manual before working with the product. For personal and system safety, and for optimum product performance, make sure you thoroughly understand the contents before installing, using, or maintaining this product.

For technical assistance, contacts are listed below:

Customer Central
Technical support, quoting, and order-related questions.

United States - 1-800-999-9307 (7:00 am to 7:00 pm CST)

Asia Pacific- 65 777 8211

Europe / Middle East / Africa - 49 (8153) 9390

North American Response Center
Equipment service needs.

1-800-654-7768 (24 hours—includes Canada)

Outside of these areas, contact your local Emerson Process Management representative.

⚠ CAUTION

The products described in this document are NOT designed for nuclear-qualified applications. Using non-nuclear qualified products in applications that require nuclear-qualified hardware or products may cause inaccurate readings.

For information on Emerson Process Management nuclear-qualified products, contact your local Rosemount Sales Representative.

⚠ WARNING

Explosions could result in death or serious injury:

Installation of this transmitter in an explosive environment must be in accordance with the appropriate local, national, and international standards, codes, and practices. Please review the approvals section of the 2051 reference manual for any restrictions associated with a safe installation.

- Before connecting a HART-based communicator in an explosive atmosphere, make sure the instruments in the loop are installed in accordance with intrinsically safe or non-incendive field wiring practices.

This device complies with Part 15 of the FCC Rules. Operation is subject to the following conditions.

This device may not cause harmful interference. This device must accept any interference received, including interference that may cause undesired operation.

This device must be installed to ensure a minimum antenna separation distance of 8 in. (20cm) from all persons.

Process leaks may cause harm or result in death.

- To avoid process leaks, only use the o-ring designed to seal with the corresponding flange adapter.

Electrical shock can result in death or serious injury.

- Avoid contact with the leads and the terminals. High voltage that may be present on leads can cause electrical shock.

⚠ CAUTION

The Rosemount 2051 and all other wireless devices should be installed only after the Smart Wireless Gateway has been installed and is functioning properly. Wireless devices should also be powered up in order of proximity from the Smart Wireless Gateway, beginning with the closest. This will result in a simpler and faster network installation.

⚠ CAUTION

Shipping considerations for wireless products (Lithium Batteries: Green Power Module, model number 701PGNKF):

The unit was shipped to you without the Power Module installed. Please remove the Power Module from the unit prior to shipping.

Each power module contains one "D" size primary lithium-thionyl chloride battery. Primary lithium batteries are regulated in transportation by the U.S. Department of Transportation, and are also covered by IATA (International Air Transport Association), ICAO (International Civil Aviation Organization), and ARD (European Ground Transportation of Dangerous Goods). It is the responsibility of the shipper to ensure compliance with these or any other local requirements. Please consult current regulations and requirements before shipping.

⚠ CAUTION

The power module with the wireless unit contains one "D" size primary lithium-thionyl chloride battery (Green Power Module, model number 701PGNKF). Each battery contains approximately 5.0 grams of lithium. Under normal conditions, the battery materials are self-contained and are not reactive as long as the battery and the pack integrity are maintained. Care should be taken to prevent thermal, electrical or mechanical damage. Contacts should be protected to prevent premature discharge.

Battery hazards remain when cells are discharged.

Power modules should be stored in a clean and dry area. For maximum battery life, storage temperature should not exceed 30 °C (86 °F).

The Power Module may be replaced in a hazardous area. The Power Module has surface resistivity greater than one gigaohm and must be properly installed in the wireless device enclosure. Care must be taken during transportation to and from the point of installation to prevent electrostatic charge build-up.

⚠ CAUTION

Using the Rosemount 2051 Wireless Pressure Transmitter in a manner other than what is specified by the manufacturer may impair the protection provided by the equipment.

Contents

Section 1: Introduction

1.1 Using this manual 1
1.2 Models covered 1
1.2.1 Rosemount 2051C Coplanar™ Pressure Transmitter 1
1.2.2 Rosemount 2051T in-line Pressure Transmitter 1
1.2.3 Rosemount 2051L Level Transmitter 2
1.2.4 Rosemount 2051CF Flowmeters 2
1.3 WirelessHART installation flowchart 3
1.4 Transmitter overview 4
1.5 Considerations before transmitter installation 5
1.5.1 Wireless considerations 5
1.5.2 Mechanical 6
1.5.3 Electrical 6
1.5.4 Environmental 7
1.6 Service support 7
1.7 Product Recycling/Disposal 8

Section 2: Configuration

2.1 Overview 9
2.2 Safety messages 9
2.3 Required bench top configuration 10
2.3.1 Connection diagrams 11
2.4 Basic setup 11
2.4.1 Set device tag 11
2.4.2 Join device to network 12
2.4.3 Configure update rate 12
2.4.4 Set process variable units 13
2.4.5 Remove Power Module 13
2.5 Configure for Pressure 13
2.5.1 Re-Mapping device variables 13
2.5.2 Set range points 14
2.5.3 Set transmitter percent of range (transfer function) 15
2.6 Configure for Level and Flow 16
2.6.1 Configuring scaled variable 16

2.6.2 Re-Mapping device variables 18
2.6.3 Set range points 19
2.7 Review configuration data 20
2.7.1 Review pressure information 20
2.7.2 Review device information 20
2.7.3 Review radio information 21
2.7.4 Review operating parameters 21
2.8 Configuring the LCD display 22
2.9 Detailed transmitter setup 23
2.9.1 Configure process alerts 23
2.9.2 Damping 23
2.9.3 Write protect 24
2.10 Diagnostics and service 24
2.10.1 Device reset 25
2.10.2 Join status 25
2.10.3 Number of available neighbors 26
2.11 Advanced Functions for HART Protocol 27
2.11.1 Saving, Recalling, and Cloning Configuration Data 27

Section 3: Installation

3.1 Overview 29
3.2 Safety messages 29
3.2.1 Warnings (). 30
3.3 Considerations 31
3.3.1 Installation considerations 31
3.3.2 Wireless considerations 31
3.3.3 Mechanical considerations 32
3.3.4 Environmental considerations 32
3.3.5 Draft range considerations 33
3.4 Installation procedures 35
3.4.1 Mount the transmitter 36
3.4.2 Impulse piping 41
3.4.3 Process connections 43
3.4.4 Inline process connection 44
3.4.5 Power Module installation 45
3.4.6 Installing the LCD display 46
3.5 Rosemount 304, 305 and 306 integral manifolds 47

3.5.1 Rosemount 305 Integral Manifold installation procedure 48
3.5.2 Rosemount 306 Integral Manifold installation procedure 49
3.5.3 Rosemount 304 Conventional Manifold installation procedure 50
3.5.4 Manifold operation 50

Section 4: Commissioning

4.1 Overview 55
4.2 Safety messages 55
4.2.1 Warnings (). 56
4.3 Viewing network status 57
4.4 Verifying operation 57
4.4.1 Using the Field Communicator 60
4.5 Configuring transmitter security 61

Section 5: Operation and maintenance

5.1 Overview 63
5.2 Safety messages 63
5.3 Calibration overview 63
5.3.1 Determining necessary Sensor Trims 64
5.3.2 Determining calibration frequency 65
5.3.3 Compensating for Span line pressure effects (range 4 and range 5) 66
5.4 Trim the pressure signal 67
5.4.1 Sensor Trim Overview 67
5.4.2 Sensor Trim 68
5.4.3 Recall Factory Trim—Sensor Trim..... 70
5.4.4 Line Pressure Effect (Range 2 and Range 3)..... 70
5.4.5 Compensating for Line Pressure (Range 4 and Range 5) 70
5.5 LCD Screen Messages 73
5.5.1 Startup Screen Sequence 73
5.5.2 Diagnostic Button Screen Sequence..... 75
5.5.3 Network Diagnostic Status Screens 76
5.5.4 Device Diagnostic Screens 79

Section 6: Troubleshooting

6.1 Overview 83
6.2 Safety messages 83
6.2.1 Warnings (). 84
6.3 Removing from service 88

Appendix A: Specifications and Reference Data

A.1 Performance Specifications 89
A.1.1 Conformance to specification (±3s (Sigma)) 89
A.1.2 Digital output 89
A.2 Functional Specifications 92
A.2.1 Service 92
A.2.2 Range and Sensor Limits 93
A.3 Wireless Self-Organizing Networks 93
A.3.1 Overpressure limits 94
A.3.2 Static pressure limit 95
A.3.3 Burst pressure limits 95
A.3.4 Temperature limits 95
A.3.5 Humidity Limits 96
A.3.6 Volumetric Displacement 96
A.3.7 Damping 96
A.4 Physical specifications 97
A.4.1 Electrical connections 97
A.4.2 Process connections 97
A.4.3 Process-Wetted parts 97
A.4.4 Rosemount 2051L Process Wetted Parts 98
A.4.5 Non-Wetted Parts 98
A.4.6 Shipping Weights for 2051 Wireless Pressure Transmitter 100
A.5 Dimensional Drawings 101
A.6 Ordering Information 103
A.7 Options 127
A.8 Spare parts 130

Appendix B: Product Certifications

B.1 Wireless Certifications 131
B.1.1 Approved manufacturing locations 131
B.1.2 European directive information 131
B.1.3 Telecommunication compliance 131
B.1.4 FCC and IC 131
B.1.5 Ordinary location certification for FM 132
B.1.6 North American certifications 132
B.1.7 CSA - Canadian Standards Association 132
B.1.8 European certifications 132

Appendix C: Field Communicator Menu Trees and Fast Keys

C.1 Field Communicator menu trees 135

Appendix D: Network design best practices

D.1 Effective range..... 139

Section 1 Introduction

Using this manual . . . . . **page 1**
Models covered . . . . . **page 1**
Service support . . . . . **page 7**
Product Recycling/Disposal . . . . . **page 8**

1.1 Using this manual

The sections in this manual provide information on installing, operating, and maintaining the Rosemount 2051 Wireless pressure transmitter with WirelessHART™ protocol. The sections are organized as follows:

- Section 2: Configuration provides instruction on commissioning and operating 2051 Wireless transmitters. Information on software functions, configuration parameters, and online variables is also included.
- Section 3: Installation contains mechanical and electrical installation instructions.
- Section 4: Commissioning contains techniques for properly commissioning the device.
- Section 5: Operation and maintenance contains operation and maintenance techniques.
- Section 6: Troubleshooting provides troubleshooting techniques for the most common operating problems.
- Appendix A: Specifications and Reference Data supplies reference and specification data, as well as ordering information.
- Appendix B: Product Certifications contains approval information.
- Appendix C: Field Communicator Menu Trees and Fast Keys provides full menu trees and abbreviated fast key sequences for commissioning tasks.
- Appendix D: Network design best practices provides information on how to optimize network reliability and performance.

1.2 Models covered

The following Rosemount 2051 Pressure Transmitters are covered by this manual:

1.2.1 Rosemount 2051C Coplanar™ Pressure Transmitter

- Measures differential and gage pressure up to 2000 psi (137,9 bar).
- Measures absolute pressure up to 4000 psi (275,8 bar)

1.2.2 Rosemount 2051T in-line Pressure Transmitter

- Measures gage / absolute pressure up to 10000 psi (689,5 bar).

1.2.3 Rosemount 2051L Level Transmitter

- Measures level and specific gravity up to 300 psi (20,7 bar)

1.2.4 Rosemount 2051CF Flowmeters

- Measures flow in line sizes from 1/2 in. (15 mm) to 96 in. (2400 mm)

1.3 WirelessHART installation flowchart

Figure 1-1. WirelessHART installation flowchart

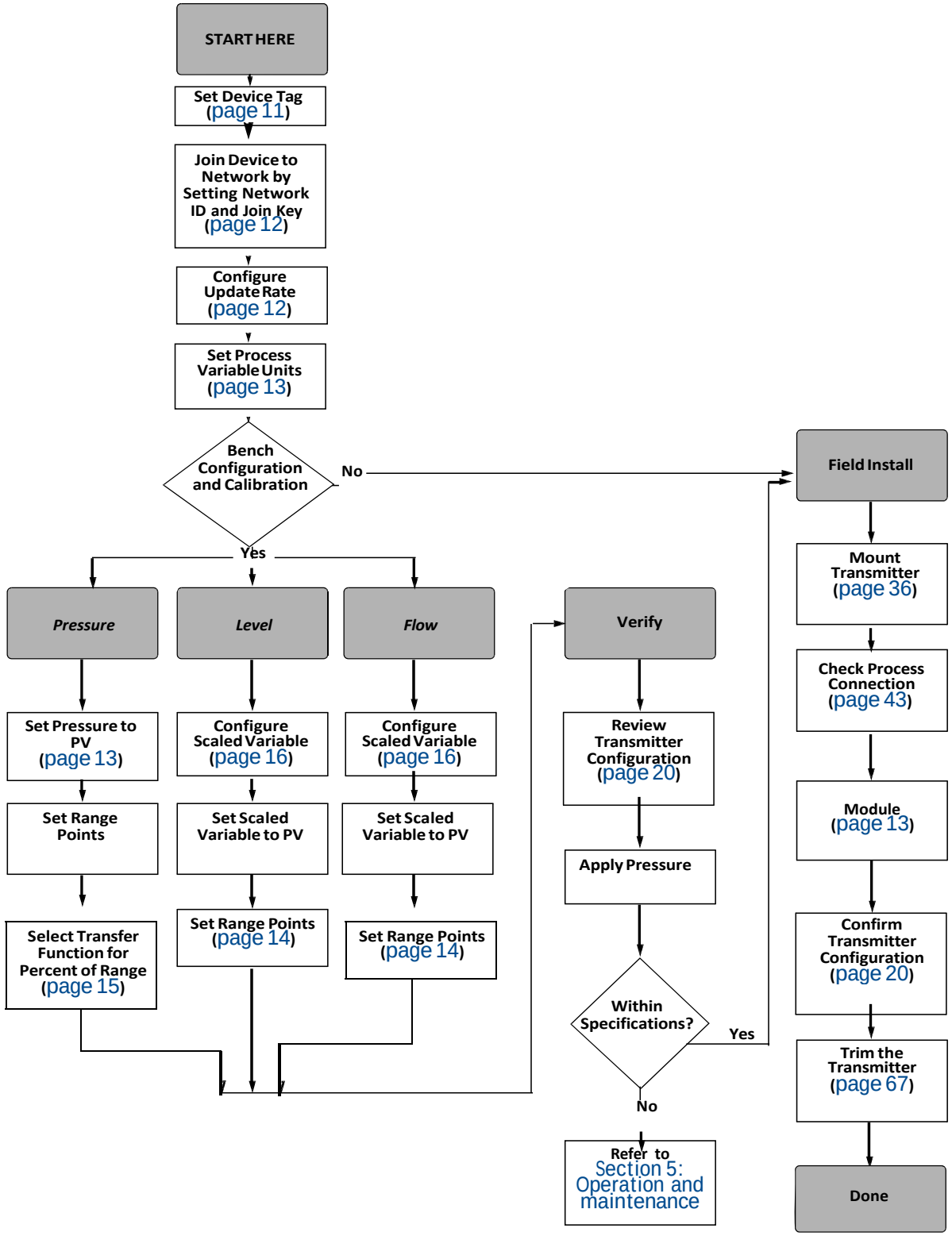

1.4 Transmitter overview

The Rosemount 2051C Coplanar design is offered for Differential Pressure (DP), Gage Pressure (GP) and Absolute Pressure (AP) measurements. The Rosemount 2051C utilizes capacitance sensor technology for DP and GP measurements. The Rosemount 2051T and 2051CA utilize piezo-resistive sensor technology for AP and GP measurements.

The major components of the Rosemount 2051 Wireless transmitter are the sensor module and the electronics housing. The sensor module contains the oil filled sensor system (isolating diaphragms, oil fill system, and sensor) and the sensor electronics. The sensor electronics are installed within the sensor module and include a temperature sensor, a memory module, and the analog to digital signal converter (A/D converter). The electrical signals from the sensor module are transmitted to the output electronics in the electronics housing. The electronics housing contains the output electronics board, the antenna, and the battery. The basic block diagram of the Rosemount 2051CD Wireless device is illustrated in Figure 1-3 on page 5.

For the Rosemount 2051, pressure is applied to the isolating diaphragm(s). The oil deflects the sensor which then changes its capacitance or voltage signal. This signal is then changed to a digital signal by the Signal Processing Module. The microprocessor then takes the signals from the Signal Processing Module and calculates the correct output of the transmitter. This signal is then sent via wireless communication to the Gateway.

An optional LCD can be ordered that connects directly to the output electronics board which maintains direct access to the signal terminals. The display indicates output and abbreviated diagnostic messages. A clear display cover is provided. For WirelessHART output, the LCD Display features a three-line display. The first line describes the process variable measured, the second line displays the measured value, and the third line displays engineering units. The LCD can also display diagnostics messages.

Note
LCD Display utilizes a 3-line, 7-digit character display and can display output and diagnostic messages. See Figure 1-2.

Figure 1-2. LCD Display

LCD Display

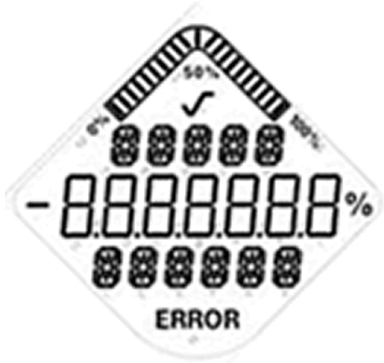

Figure 1-3. Block diagram of operation

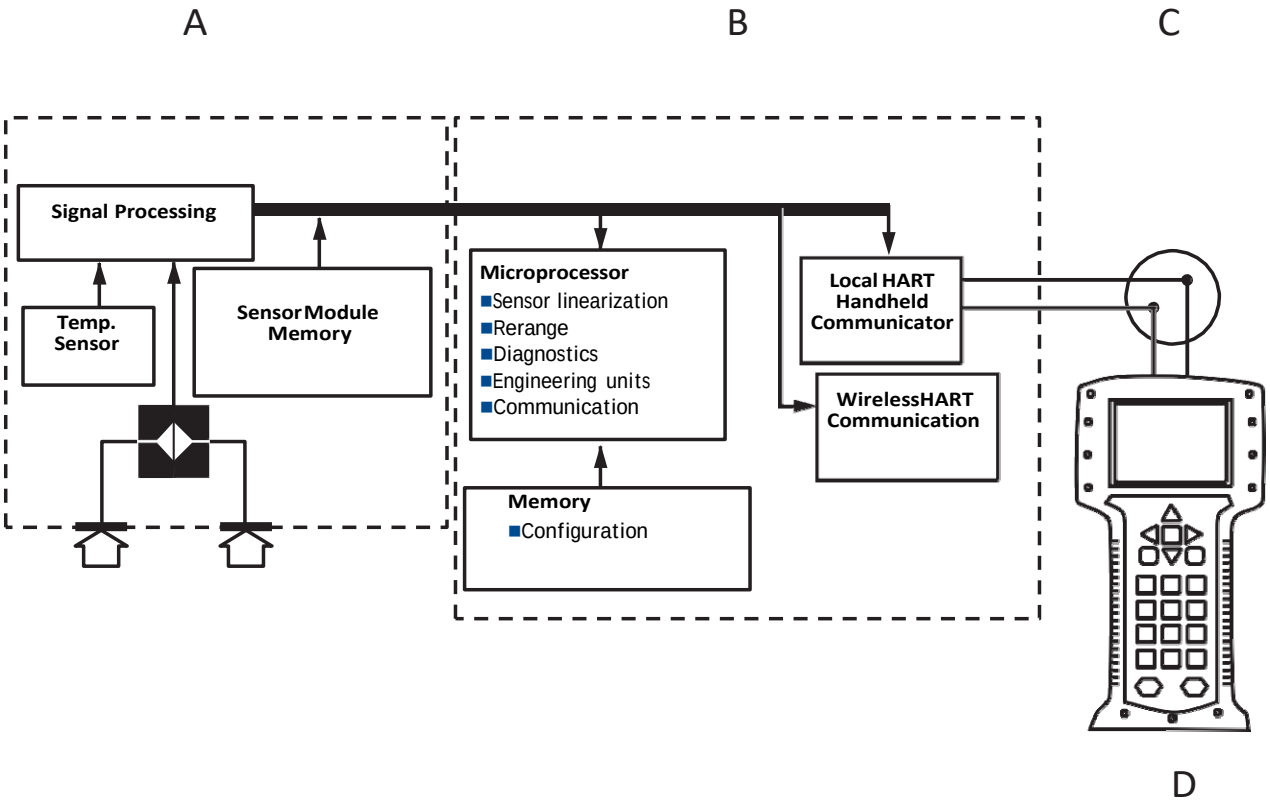

A. Sensor Module
B. Electronics Board
C. WirelessHART Signal to Control System
D. Field Communicator

1.5 Considerations before transmitter installation

1.5.1 Wireless considerations

Power up sequence

The Power Module should not be installed on any wireless device until the Smart Wireless Gateway is installed and functioning properly. This transmitter uses the Green Power Module (order model number 701PGNKF). Wireless devices should also be powered up in order of proximity from the Smart Wireless Gateway, beginning with the closest. This will result in a simpler and faster network installation. Enable Active Advertising on the Gateway to ensure that new devices join the network faster. For more information, see the Smart Wireless Gateway Manual (Doc. No. 00809-0200-4420).

Antenna position

The internal antenna is designed for multiple mounting orientations. The transmitter should be mounted according to best practices for your pressure measurement application.

Network design best practices

When mounting the device, recommended practices should be considered to achieve the best wireless performance. See Appendix D: Network design best practices for more information on recommended practices.

Field communicator connections

The Power Module needs to be installed in the device for the Field Communicator to interface with the Rosemount 2051. The Field Communicator connections are located on the Power Module. To communicate to the transmitter, connect the Field Communicator to the COMM port connections on the Power Module. This transmitter uses the Green Power Module; please order model number 701PGNKF. Field communication with this device requires a HART-based Field Communicator using the correct Rosemount 2051 Wireless DD. The Power Module is keyed and can only be inserted in one orientation. Refer to Figure 1-4 for instructions on connecting the Field Communicator to the 2051.

Figure 1-4. Field Communicator Connections

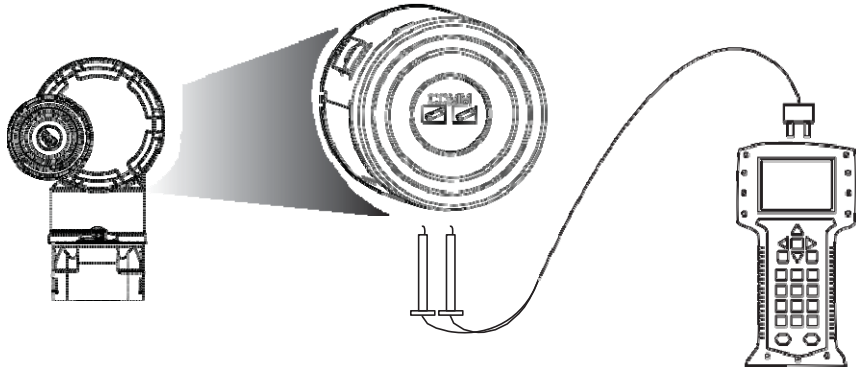

1.5.2 Mechanical

Location

When choosing an installation location and position, take into account access to the power module compartment for easy power module replacement.

Electronics cover

The electronics cover is tightened so that polymer contacts polymer. When removing the electronics cover, ensure that there is no damage done to the o-ring. If damaged replace before reattaching cover, ensuring polymer contacts polymer (i.e. no o-ring visible).

1.5.3 Electrical

Power module

The Rosemount 2051 Wireless Pressure Transmitter is self-powered. The Power Module contains a primary lithium-thionyl chloride battery (Green Power Module, model number

701PGNKF). Each battery contains approximately 5 grams of lithium. Under normal conditions, the battery materials are self-contained and are not reactive as long as the battery and the Power Module are maintained. Care should be taken to prevent thermal, electrical, or mechanical damage. Contacts should be protected to prevent premature discharge.

Use caution when handling the Power Module, it may be damaged if dropped from heights in excess of 6.10 m (20 ft).

1.5.4 Environmental

Verify that the operating atmosphere of the transmitter is consistent with the appropriate hazardous locations certifications.

Temperature effects

The transmitter will operate within specifications for ambient temperatures between -40 and 85 °C (-40 and 185 °F).

Heat from the process is transferred to the transmitter housing. If the process temperature is high, the ambient temperature will need to be lower to account for heat transferred to the transmitter housing. See "Process Temperature Limits" on page 96 for process temperature derating.

1.6 Service support

Within the United States, call the Emerson Process Management Instrument and Valve Response Center using the 1-800-654-RSMT (7768) toll-free number. This center, available 24 hours a day, will assist you with any needed information or materials.

The center will ask for product model and serial numbers, and will provide a Return Material Authorization (RMA) number. The center will also ask for the process material to which the product was last exposed.

For inquiries outside of the United States, contact the nearest Emerson Process Management representative for RMA instructions.

To expedite the return process outside of the United States, contact the nearest Emerson Process Management representative.

⚠ CAUTION

Individuals who handle products exposed to a hazardous substance can avoid injury if they are informed of and understand the hazard. The product being returned will require a copy of the required Material Safety Data Sheet (MSDS) for each substance must be included with the returned goods.

⚠ CAUTION

Shipping considerations for wireless products (Lithium Batteries: Green Power Module, model number 701PGNKF):

The unit was shipped to you without the Power Module installed. Please remove the Power Module from the unit prior to shipping.

Each power module contains a primary lithium-thionyl chloride battery. Primary lithium batteries are regulated in transportation by the U.S. Department of Transportation, and are also covered by IATA (International Air Transport Association), ICAO (International Civil Aviation Organization), and ARD (European Ground Transportation of Dangerous Goods). It is the responsibility of the shipper to ensure compliance with these or any other local requirements. Please consult current regulations and requirements before shipping.

The Power Module contains a primary lithium-thionyl chloride battery (Green Power Module, model number 701PGNKF). Each Power Module contains approximately 5 grams of lithium. Under normal conditions, the Power Module materials are self-contained and are not reactive as long as the batteries and the module integrity are maintained. Care should be taken to prevent thermal, electrical or mechanical damage. Contacts should be protected to prevent premature discharge. Power Module hazards remain when cells are discharged.

Power Module should be stored in a clean and dry area. For maximum battery life, storage temperature should not exceed 86 °F (30 °C).

Emerson Process Management Instrument and Valve Response Center representatives will explain the additional information and procedures necessary to return goods exposed to hazardous substances.

1.7 Product Recycling/Disposal

Recycling of equipment and packaging should be taken into consideration and disposed of in accordance with local and national legislation/regulations.

Section 2 Configuration

Overview . . . . . page 9
Safety messages . . . . . page 9
Required bench top configuration . . . . . page 10
Basic setup . . . . . page 11
Review configuration data . . . . . page 20
Review operating parameters . . . . . page 21
Review operating parameters . . . . . page 21
Configuring the LCD display . . . . . page 22
Configuring the LCD display . . . . . page 22
Detailed transmitter setup . . . . . page 23
Diagnostics and service . . . . . page 24
Advanced Functions for HART Protocol . . . . . page 27

2.1 Overview

This section contains information on commissioning and tasks that should be performed on the bench prior to installation.

Field Communicator and AMS Device Manager instructions are given to perform configuration functions. For convenience, Field Communicator fast key sequences are labeled "Fast Keys" for each software function below the appropriate headings.

Full Field Communicator menu trees and fast key sequences are available in Appendix C: Field Communicator Menu Trees and Fast Keys.

2.2 Safety messages

Procedures and instructions in this section may require special precautions to ensure the safety of the personnel performing the operations. Information that raises potential safety issues is indicated by a warning symbol (⚠. Refer to the following safety messages before performing an operation preceded by this symbol.

Warnings (⚠)

⚠ WARNING

Failure to follow these installation guidelines could result in death or serious injury.

- Make sure only qualified personnel perform the installation.

Explosions could result in death or serious injury:

Installation of this transmitter in an explosive environment must be in accordance with the appropriate local, national, and international standards, codes, and practices. Please review the approvals section of the 2051 Wireless reference manual for any restrictions associated with a safe installation.

- Before connecting a Field Communicator in an explosive atmosphere, make sure the instruments are installed in accordance with intrinsically safe or non-incendive field wiring practices.
- Verify that the operating atmosphere of the transmitter is consistent with the appropriate hazardous locations certifications

Process leaks could result in death or serious injury.

- Install and tighten process connectors before applying pressure.

Electrical shock could cause death or serious injury.

- Avoid contact with the leads and terminals. High voltage that may be present on leads can cause electrical shock.

This device complies with Part 15 of the FCC Rules. Operation is subject to the following conditions: This device may not cause harmful interference. This device must accept any interference received, including interference that may cause undesired operation.

- This device must be installed to ensure a minimum antenna separation distance of 20cm (8 in.) from all persons.

2.3 Required bench top configuration

Bench top configuration requires a Field Communicator, AMS, or any WirelessHART Communicator. Connect the Field Communicator leads to the terminals labeled "COMM" on the Power Module. See Figure 2-1 on page 11.

Bench top configuration consists of testing the transmitter and verifying transmitter configuration data. 2051 Wireless transmitters must be configured before installation. Configuring the transmitter on the bench before installation using a Field Communicator, AMS, or any WirelessHART Communicator ensures that all network settings are working correctly.

When using a Field Communicator, any configuration changes made must be sent to the transmitter by using the "Send" key (F2). AMS configuration changes are implemented when the "Apply" button is clicked.

AMS Wireless Configurator

AMS is capable of connecting to devices either directly, using a HART modem, or wirelessly via the Smart Wireless Gateway. When configuring the device, double click the device icon or right click and select Configure.

2.3.1 Connection diagrams

Bench hook-up

Connect the bench equipment as shown in Figure 2-1 on page 11, and turn on the Field Communicator by pressing the ON/OFF key or log into AMS. The Field Communicator or AMS will search for a HART-compatible device and indicate when the connection is made. If the Field Communicator or AMS fail to connect, it indicates that no device was found. If this occurs, refer to Section 6: Troubleshooting.

Field hook-up

Figure 2-1 on page 11 illustrates the wiring for a field hook-up with a Field Communicator or AMS. The Field Communicator or AMS may be connected at "COMM" on the transmitter Power Module.

Figure 2-1. Field Communicator Connection

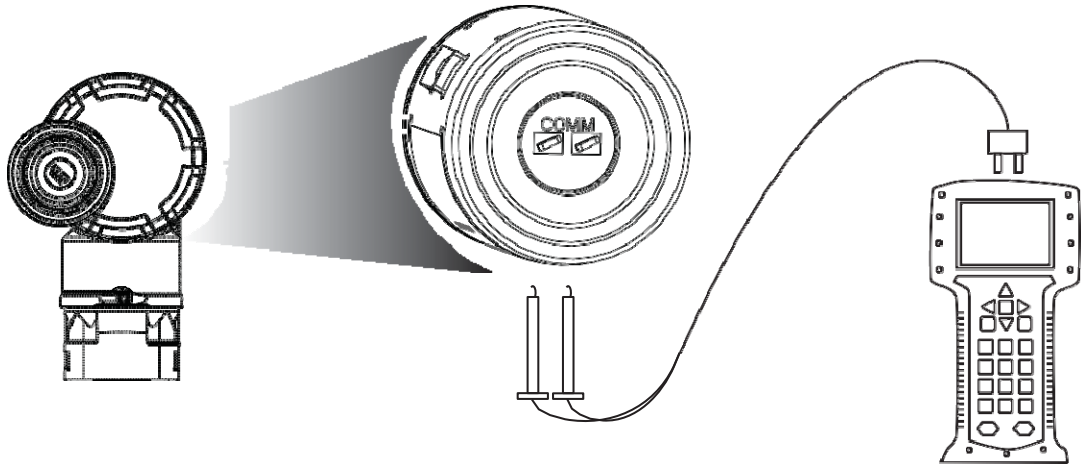

For HART communication, a 2051 WirelessHART DD is required.

2.4 Basic setup

2.4.1 Set device tag

Fast Keys	2, 2, 9, 1, 1

The tag is used to identify the device. You can use an 8 to 32 character tag.

1. From the *Home* screen, select **2: Configure**
2. Select **2: Manual Setup**
3. Select **9: Device Information**
4. Select **1: Identification**
5. Select **1: Tag**

2.4.2 Join device to network

Fast Keys	2, 1, 3

In order to communicate with the Smart Wireless Gateway, and ultimately the Host System, the transmitter must be configured to communicate over the wireless network. This step is the wireless equivalent of connecting wires from a transmitter to the host system.

1. From the *Home* screen, select **2: Configure**.
2. Select **1: Guided Setup**.
3. Select **3: Join Device to Network**.

Using a Field Communicator or AMS, enter the Network ID and Join Key so that they match the Network ID and Join Key of the Smart Wireless Gateway and other devices in the network. If the Network ID and Join Key are not identical to those set in the Gateway, the transmitter will not communicate with the network. The Network ID and Join Key may be obtained from the Smart Wireless Gateway on the Setup>Network>Settings page on the web server.

2.4.3 Configure update rate

Fast Keys	2, 1, 4

The Update Rate is the frequency at which a new measurement is taken and transmitted over the wireless network. This by default is 1 minute. This may be changed at commissioning, or at any time via AMS Wireless Configurator. The Update Rate is user selectable from 1 second to 60 minutes.

1. From the *Home* screen, select **2: Configure**.
2. Select **1: Guided Setup**.
3. Select **4: Configure Update Rate**.

2.4.4 Set process variable units

Fast Keys	2, 2, 2, 3

The PV Unit command sets the process variable units to allow you to monitor your process using the appropriate units of measure.

To select a unit of measure for the PV:

1. From the *Home* screen, select **2: Configure**.
2. Select **2: Manual Setup**.
3. Select **2: Pressure**.
4. Select **3: Unit** to select from the following engineering units:

- inH_2O at 4 °C
- inH_2O at 60 °F
- inH_2O at 68 °F
- ftH_2O at 4 °C
- ftH_2O at 60 °F
- ftH_2O at 68 °F
- mmH_2O at 4 °C
- mmH_2O at 68 °F
- cmH_2O at 4 °C
- mH_2O at 4 °C
- inHg at 0 °C
- mmHg at 0 °C
- cmHg at 0 °C
- mHg at 0 °C
- mmHg
- Psi
- Atm
- Torr
- Pascals
- hectoPascals
- Kilopascals
- Mpa
- Bar
- Mbar
- g/cm^2
- kg/cm^2
- kg/m^2

2.4.5 Remove Power Module

After the sensor and network have been configured, remove the Power Module and replace the housing cover. The Power Module should be inserted only when the device is ready to be commissioned.

Use caution when handling the Power Module. The Power Module may be damaged if dropped from heights in excess of 6.10 m (20 ft).

2.5 Configure for Pressure

2.5.1 Re-Mapping device variables

⚠ The re-mapping function allows the transmitter primary, secondary, tertiary, and quaternary variables (PV, SV, TV, and QV) to be configured in one of two configurations. The user may select either the option of Classic mapping or Scaled Variable Mapping, see Table 2-1 for what is mapped to each variable. All variables can be remapped with a Field Communicator or AMS Device Manager.

Table 2-1. Variable Mapping

	Classic Mapping	Scaled Variable Mapping
PV	Pressure	Scaled Variable
SV	Sensor Temperature	Pressure
TV	Electronics Temperature	Sensor Temperature
QV	Supply Voltage	Supply Voltage

Note
The variable assigned to the primary variable drives the output. This value can be selected as Pressure or Scaled Variable.

Re-mapping using a Field Communicator

From the *HOME* screen, enter the fast key sequence

Fast Keys	2, 2, 6, 1

Re-mapping using AMS Device Manager

Right click on the device and select **Configure**.

1. Select **Manual Setup** and click on the **HART** tab.
2. Assign Primary, secondary, tertiary and quaternary variables under *Variable Mapping*.
3. Click **Send**.
4. Carefully read the warning and click **Yes** if it is safe to apply the changes.

2.5.2 Set range points

From the *HOME* screen, enter the fast key sequence

Fast Keys	2, 1, 1, 5

The Range Values command sets the lower and upper range values used for the percent of range measurement.

Note
Transmitters are shipped from Rosemount Inc. fully calibrated per request or by the factory default of full scale (span = upper range limit).

1. From the *Home* screen, select **2: Configure**
2. Select **1: Guided Setup**
3. Select **1: Basic Setup**
4. Select **5: Range Values**

2.5.3 Set transmitter percent of range (transfer function)

The Rosemount 2051 Wireless transmitter has two transfer functions for pressure applications: Linear and Square Root. As shown in Figure 2-2 on page 15, activating the square root options the transmitter analog output proportional to flow.

However, for DP Flow and DP Level applications it is recommended to use Scaled Variable. Refer to "Diagnostics and service" on page 24 for setup instructions.

From 0 to 0.6 percent of the ranged pressure input, the slope of the curve is unity (y = x). This allows accurate calibration near zero. Greater slopes would cause large changes in output (for small changes at input). From 0.6 percent to 0.8 percent, curve slope equals 42 (y = 42x) to achieve continuous transition from linear to square root at the transition point.

Setting transmitter output with a Field Communicator

From the *HOME* screen, enter the fast key sequence

Fast Keys	2, 2, 4, 2

Setting transmitter output with AMS Device Manager

Right click on the device and select Configure.

1. Click **Manual Setup** and choose output type from *Transfer Function* and click **Send**.
2. Carefully read the warning and click **Yes** if it is safe to apply the changes.

Figure 2-2. Square Root Output Transition Point

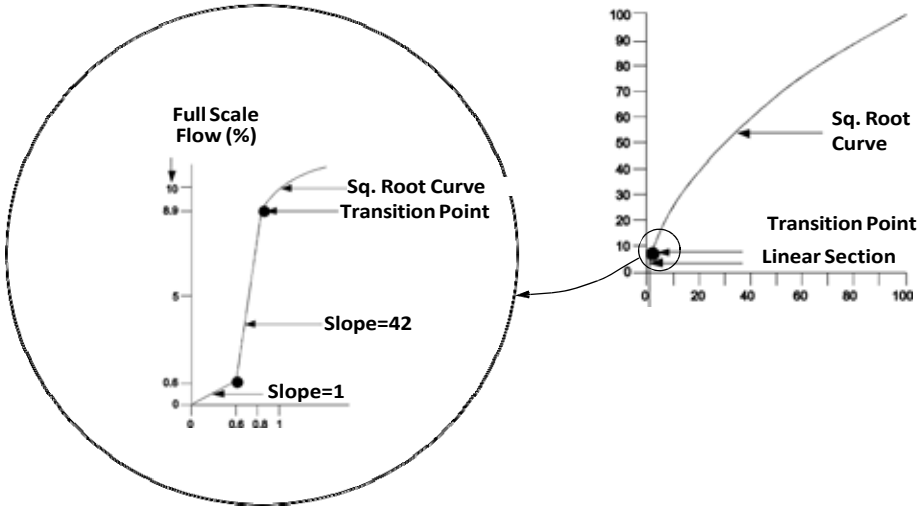

2.6 Configure for Level and Flow

2.6.1 Configuring scaled variable

The Scaled Variable configuration allows the user to create a relationship / conversion between the pressure units and user-defined / custom units. There are two use cases for Scaled Variable. The first use case is to allow custom units to be displayed on the transmitter's LCD Display. The second use case is to allow custom units to drive the transmitter's PV output.

If the user desires custom units to drive the PV output, Scaled Variable must be re-mapped as the primary variable. Refer to "Re-Mapping device variables" on page 18.

The Scaled Variable configuration defines the following items:

- Scaled Variable units - Custom units to be displayed.
- Scaled data options - Defines the transfer function for the application
  - Linear
  - Square root
- Pressure value position 1 - Lower known value point with consideration of linear offset.
- Scaled Variable value position 1 - Custom unit equivalent to the lower known value point.
- Pressure value position 2 - Upper known value point
- Scaled Variable value position 2 - Custom unit equivalent to the upper known value point
- Linear offset - The value required to zero out pressures affecting the desired pressure reading.
- Low flow cutoff - Point at which output is driven to zero to prevent problems caused by process noise. It is highly recommended to use the low flow cutoff function in order to have a stable output and avoid problems due to process noise at a low flow or no flow condition. A low flow cutoff value that is practical for the flow element in the application should be entered.

Configuring Scaled Variable using a Field Communicator

From the *HOME* screen, enter the fast key sequence

Device Dashboard Fast Keys	2, 1, 7

1. Follow the screen prompts to configure Scaled Variable.
   a. When configuring for level, select **Linear** under *Select Scaled data options*.
   b. When configuring for flow, select **Square Root** under *Select Scaled data options*.

Configuring Scaled Variable using AMS Device Manager

Right click on the device and, select **Configure**.

1. Select the **Scaled Variable** tab and click the **Scaled Variable** button.

2. Follow screen prompts to configure Scaled Variable

a. When configuring for level applications, select **Linear** under *Select Scaled data options*.
b. When configuring for flow applications, select **Square Root** under *Select Scaled data options*.

DP Level Example

Figure 2-3. Example tank

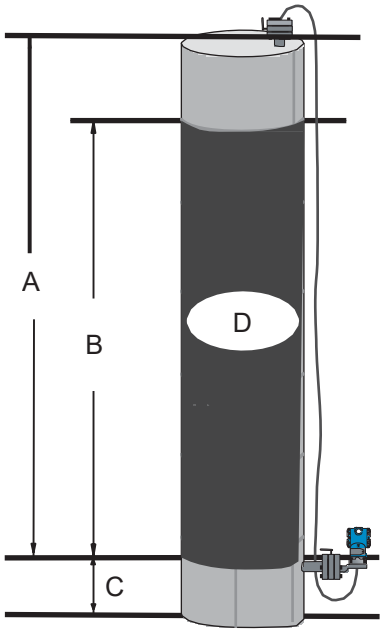

A. 230 in.
B. 200 in.
C. 12 in.
D. 0.94 sg

A differential transmitter is used in a level application. Once installed on an empty tank and taps vented, the process variable reading is -209.4 inH2O. The process variable reading is the head pressure created by fill fluid in the capillary. Based on Table 2-2 on page 2-17, the Scaled Variable configuration would be as follows:

Table 2-2. Scaled Variable Configuration for Tank Application

Scaled Variable units:	inch
Scaled data options:	linear
Pressure value position 1:	0 inH_2O
Scaled Variable position 1:	12 in.
Pressure value position 2:	188 inH_2O
Scaled Variable position 2:	212 in.
Linear offset:	-209.4 inH_2O

DP Flow example

A differential pressure transmitter is used in conjunction with an orifice plate in a flow application where the differential pressure at full scale flow is 125 inH2O. In this particular application, the flow rate at full scale flow is 20,000 gallons of water per hour. It is highly

recommended to use the low flow cutoff function in order to have a stable output and avoid problems due to process noise at a low flow or no flow condition. A low flow cutoff value that is practical for the flow element in the application should be entered. In this particular example, the low flow cutoff value is 1000 gallons of water per hour. Based on this information, the Scaled Variable configuration would be as follows:

Table 2-3. Scaled Variable Configuration for Flow Application

Scaled Variable units:	gal/h
Scaled data options:	square root
Pressure value position 2:	125 inH2O
Scaled Variable position 2:	20,000 gal/h
Low Flow Cutoff:	1000 gal/h

Note
Pressure value position 1 and Scaled Variable position 1 are always set to zero for a flow application. No configuration of these values is required.

2.6.2 Re-Mapping device variables

⚠ The re-mapping function allows the transmitter primary, secondary, tertiary, and quaternary variables (PV, SV, TV, and QV) to be configured in one of two configurations. The user may select either the option of Classic Mapping or Scaled Variable Mapping, see Table 2-4 for what is mapped to each variable. All variables can be remapped with a Field Communicator or AMS Device Manager.

Table 2-4. Variable Mapping

	Classic Mapping	Scaled Variable Mapping
PV	Pressure	Scaled Variable
SV	Sensor Temperature	Pressure
TV	Electronics Temperature	Sensor Temperature
QV	Supply Voltage	Supply Voltage

Note
The variable assigned to the primary variable drives the output. This value can be selected as Pressure or Scaled Variable.

Re-mapping using a Field Communicator

From the *HOME* screen, enter the fast key sequence

Fast Keys	2, 2, 6, 1, 1

Re-mapping using AMS Device Manager

Right click on the device and select **Configure**.

1. Select **Manual Setup** and click on the **HART** tab.
2. Assign Primary, secondary, tertiary and quaternary variables under *Variable Mapping*.
3. Click **Send**.
4. Carefully read the warning and click **Yes** if it is safe to apply the changes.

2.6.3 Set range points

From the *HOME* screen, enter the fast key sequence

Fast Keys	2, 1, 1, 5

The Range Values command sets the lower and upper range values used for the percent of range measurement.

Note
Transmitters are shipped from Rosemount Inc. fully calibrated per request or by the factory default of full scale (span = upper range limit).

1. From the *Home* screen, select **2: Configure**
2. Select **1: Guided Setup**
3. Select **1: Basic Setup**
4. Select **5: Range Values**

2.7 Review configuration data

The following is a list of factory default configurations that can be viewed by using the Field Communicator or AMS. Follow the steps below to review the transmitter configuration information.

Note
Information and procedures in this section that make use of Field Communicator fast key sequences and AMS assume that the transmitter and communication equipment are connected, powered, and operating correctly.

2.7.1 Review pressure information

Fast Keys	2, 2, 2

To view pressure information:

1. From the *Home* screen, select **2: Configure**.
2. Select **2: Manual Setup**.
3. Select **2: Pressure**.
4. Select from the corresponding number to view each field:

1	Pressure
2	Pressure Status
3	Units
4	Damping

2.7.2 Review device information

Fast Keys	2, 2, 9

To view device information:

1. From the *Home* screen, select **2: Configure**.
2. Select **2: Manual Setup**.
3. Select **9: Device Information**.
4. Select from the corresponding number to view each field:

1	Identification
2	Revisions
3	Radio
4	Sensor Information
5	Flange Information
6	Remote Seal

2.7.3 Review radio information

Fast Keys	1, 7, 3

To view radio information:

1. From the *Home* screen, select **1: Overview**.
2. Select **7: Device Information**.
3. Select **3: Radio**.
4. Select from the corresponding number to view each field:

1	Manufacturer
2	Device Type
3	Device Revision
4	Software Revision
5	Hardware Revision
6	Transmit Power Level
7	Minimum Update Rate

2.7.4 Review operating parameters

Fast Keys	3, 2

The pressure output value in both engineering units and percent of range will reflect the applied pressure even when the applied pressure is outside of the configured range as long as the applied pressure is between the upper and lower range limit of the transmitter. For example, if a Range 2 2051T (LRL = 0 psi, URL = 150 psi) is ranged from 0 to 100 psi, an applied pressure of 150 psi will return a % of range output of 150% and an engineering output of 150 psi.

To view the *Operating Parameters* menu:

1. From the *Home* screen, select **3: Service Tools**.
2. Select **2: Variables**.

The Operating Parameters menu displays the following information pertaining to the device:

1. Process
   - Pressure
   - Percent of Range
   - Last Update Time
   - Scaled Variable
   - Enter Fast Update Mode
2. Device
   - Sensor Temperature
   - Supply Voltage

2.8 Configuring the LCD display

The LCD Display configuration command allows customization of the LCD to suit application requirements. The LCD will alternate between the selected items.

- Pressure Units
- % of Range
- Scaled Variable
- Sensor Temperature
- Supply Voltage

In the following instructions, the LCD can also be configured to display configuration information during the device startup. Select **Review Parameters at Startup** to enable or disable this functionality.

Reference Figure 1-2 on page 4 LCD with Local Operator Interface for image of LCD screen.

Configuring LCD display with a Field Communicator

From the *HOME* screen, enter the fast key sequence

Device Dashboard Fast Keys	2, 2, 5

Configuring LCD display with AMS Device Manager

Right click on the device and select **Configure**.

1. Click **Manual Setup,** select the **Display** tab.
2. Select desired display options and click **Send.**

2.9 Detailed transmitter setup

2.9.1 Configure process alerts

Fast Keys	2, 1, 6

Process alerts allow the transmitter to indicate when the configured data point is exceeded. Process alerts can be set for pressure, temperature, or both. An alert will be displayed on a Field Communicator, AMS Device Manager status screen or in the error section of the LCD Display. The alert will reset once the value returns within range.

Note
HI alert value must be higher than the LO alert value. Both alert values must be within the pressure or temperature sensor limits.

Example 1: Rising Alert

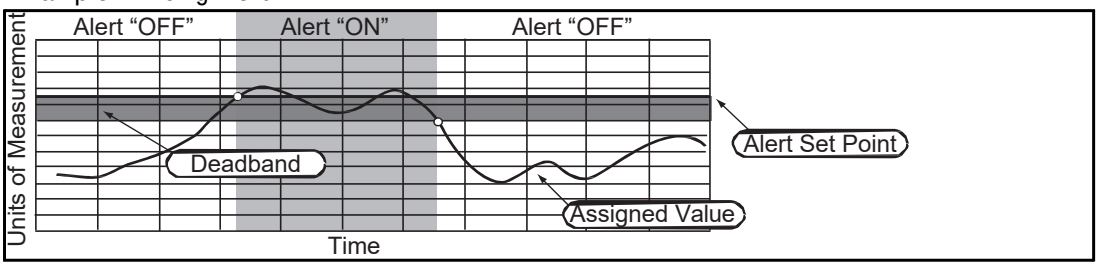

Example 2: Falling Alert

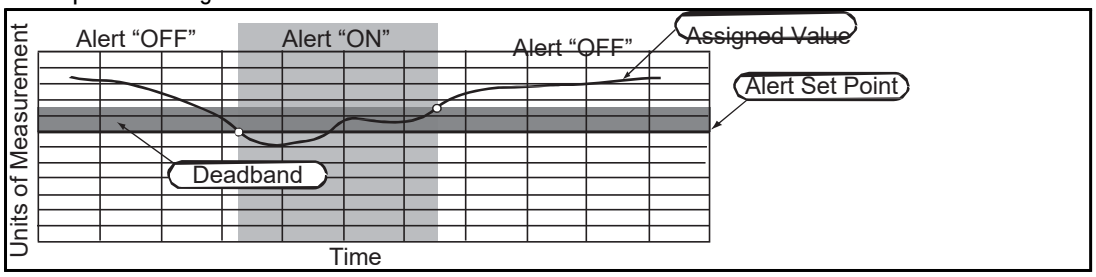

To configure the process alerts, perform the following procedure:

1. From the *Home* screen, select **2: Configure**.
2. Select **1: Guided Setup**.
3. Select **6: Configure Process Alerts** and follow the on-screen instructions to complete configure of process alarms.

2.9.2 Damping

The Damping command introduces a delay in processing which increases the response time of the transmitter; smoothing variations in output readings caused by rapid input changes. In the

2051 Wireless pressure transmitter, damping only takes effect when the device is placed in high power refresh mode and during calibration. In normal power mode, the effective damping is 0. Note that when the device is in high power refresh mode, battery power will be depleted rapidly. Determine the appropriate damp setting based on the necessary response time, signal stability, and other requirements of the loop dynamics of your system. The damping value of your device is user selectable from 0 to 60 seconds.

Damping with a Field Communicator

From the *HOME* screen, enter the fast key sequence

Device Dashboard Fast Keys	2, 2, 2, 4

Enter desired Damping Value and select **APPLY**.

Damping with AMS Device Manager

Right click on the device and select Configure.

1. Select **Manual Setup**.
2. Within the *Pressure Setup* box, enter desired damping value and click **Send**.
3. Carefully read the warning and click **Yes** if it is safe to apply the changes.

2.9.3 Write protect

The Rosemount 2051 Wireless pressure transmitter has a software write protect security feature.

Enabling write protect with a Field Communicator

From the *HOME* screen, enter the fast key sequence

Device Dashboard Fast Keys	2, 2, 7, 1

Select **Write Protect** to enable.

Enabling write protect with AMS Device Manager

Right click on device and select **Configure.**

1. Select **Manual Setup.**
2. Select the tab labeled **Device Information.**
3. Select **Write Protect** to enable this feature.

2.10 Diagnostics and service

Diagnostics and service functions listed below are primarily for use after field installation. The Transmitter Test feature is designed to verify that the transmitter is operating properly, and can be performed either on the bench or in the field.

2.10.1 Device reset

The master reset function will reset the device electronics. To perform a device reset:

Performing master reset using a Field Communicator

From the *HOME* screen, enter the fast key sequence

Device Dashboard Fast Keys	3, 5, 5

Performing master reset using AMS Device Manager

1. From the *Home* screen, select **3: Service Tools**.
2. Select **5: Maintenance**
3. Select **5: Device Reset**

2.10.2 Join status

Viewing join status using a Field Communicator

From the *HOME* screen, enter the fast key sequence

Device Dashboard Fast Keys	3, 4, 1

Viewing join status using AMS Device Manager

To view the join status of the device, perform the following procedure:

1. From the *Home* screen, select **3: Service Tools**.
2. Select **4: Communications**.
3. Select **1: Join Status**.

Wireless devices join the secure network through a four step process:

- Step 1. Network Found
- Step 2. Network Security Clearance Granted
- Step 3. Network Bandwidth Allocated
- Step 4. Network Join Complete

2.10.3 Number of available neighbors

Viewing number of available neighbors using a Field Communicator

From the *HOME* screen, enter the fast key sequence

Device Dashboard Fast Keys	3, 4, 3

Viewing number of available neighbors using AMS Device Manager

In a self-organizing network, the more neighbors a device has, the more robust the network will be. To view the number of available neighbors for the wireless device, perform the following procedure:

1. From the *Home* screen, select **3: Service Tools**.
2. Select **4: Routine Maintenance**.
3. Select **3: Number of Available Neighbors**.

2.11 Advanced Functions for HART Protocol

2.11.1 Saving, Recalling, and Cloning Configuration Data

Fast Keys	left arrow, 1, 2

Use the cloning feature of the Field Communicator or the AMS "User Configuration" feature to configure several 2051 Wireless transmitters similarly. Cloning involves configuring a transmitter, saving the configuration data, then sending a copy of the data to a separate transmitter. Several possible procedures exist when saving, recalling, and cloning configuration data. For complete instructions refer to the Field Communicator manual (publication no. 00809-0100-4276) or AMS Books Online. One common method is as follows:

Field Communicator

1. Completely configure the first transmitter.
2. Save the configuration data:
   a. Select **F2 SAVE** from the Field Communicator **HOME/ONLINE** screen.
   b. Ensure that the location to which the data will be saved is set to **MODULE**. If it is not, select 1: Location to set the save location to **MODULE**.
   c. Select 2: Name, to name the configuration data. The default is the transmitter tag number.
   d. Ensure that the data type is set to **STANDARD**. If the data type is NOT **STANDARD**, select 3: Data Type to set the data type to **STANDARD**.
   e. Select **F2 SAVE**.
3. Connect and power the receiving transmitter and Field Communicator.
4. Select the back arrow from the **HOME/ONLINE** screen. The Field Communicator menu appears.
5. Select 1: Offline, 2: Saved Configuration, 1: Module Contents to reach the **MODULE CONTENTS** menu.
6. Use the **DOWN ARROW** to scroll through the list of configurations in the memory module, and use the **RIGHT ARROW** to select and retrieve the required configuration.
7. Select 1: Edit.
8. Select 1: Mark All.
9. Select **F2 SAVE**.
10. Use the **DOWN ARROW** to scroll through the list of configurations in the memory module, and use the **RIGHT ARROW** to select the configuration again.
11. Select 3: Send to download the configuration to the transmitter.
12. Select OK after the control loop is set to manual.
13. After the configuration has been sent, select OK.

When finished, the Field Communicator informs you of the status. Repeat Steps 3 through 13 to configure another transmitter.

Note
The transmitter receiving cloned data must have the same software version (or later) as the original transmitter.

AMS creating a Reusable Copy

To create a reusable copy of a configuration perform the following procedure:

1. Completely configure the first transmitter.
2. Select View then User Configuration View from the menu bar (or click the toolbar button).
3. In the User Configuration window, right click and select New from the context menu.
4. In the New window, select a device from the list of templates shown, and click OK.
5. The template is copied into the User Configurations window, with the tag name highlighted; rename it as appropriate and press Enter.

Note
A device icon can also be copied by dragging and dropping a device template or any other device icon from AMS Explorer or Device Connection View into the User Configurations window.

The "Compare Configurations" window appears, showing the Current values of the copied device on one side and mostly blank fields on the other (User Configuration) side.

6. Transfer values from the current configuration to the user configuration as appropriate or enter values by typing them into the available fields.
7. Click Apply to apply the values, or click OK to apply the values and close the window.

AMS Applying a User Configuration

Any amount of user configurations can be created for the application. They can also be saved, and applied to connected devices or to devices in the Device List or Plant Database.

To apply a user configuration perform the following procedure:

1. Select the desired user configuration in the User Configurations window.
2. Drag the icon onto a like device in AMS Explorer or Device Connection View. The Compare Configurations window opens, showing the parameters of the target device on one side and the parameters of the user configuration on the other.
3. Transfer parameters from the user configuration to the target device as desired, Click OK to apply the configuration and close the window.

Section 3 Installation

Overview . . . . . page 29
Safety messages . . . . . page 29
Considerations . . . . . page 31
Installation procedures . . . . . page 35
Installing the LCD display . . . . . page 46
Rosemount 304, 305 and 306 integral manifolds . . . . . page 47

3.1 Overview

The information in this section covers installation considerations. A Quick Installation Guide (document number 00825-0100-4102) is shipped with every transmitter to describe basic installation and start up procedures. Dimensional drawings for each Rosemount 2051 Wireless variation and mounting configuration are included in Appendix A: Specifications and Reference Data.

Note
For transmitter disassembly refer to 6.3: Removing from service on page 88.

3.2 Safety messages

Procedures and instructions in this section may require special precautions to ensure the safety of the personnel performing the operation. Information that raises potential safety issues is indicated with a warning symbol (⚠). Refer to the following safety messages before performing an operation preceded by this symbol.

3.2.1 Warnings (⚠)

⚠ WARNING

Failure to follow these installation guidelines could result in death or serious injury.

- Make sure only qualified personnel perform the installation.

Explosions could result in death or serious injury:

Installation of this transmitter in an explosive environment must be in accordance with the appropriate local, national, and international standards, codes, and practices. Please review the approvals section of the 2051 Wireless reference manual for any restrictions associated with a safe installation.

- Before connecting a Field Communicator in an explosive atmosphere, make sure the instruments are installed in accordance with intrinsically safe or non-incendive field wiring practices.
- Verify that the operating atmosphere of the transmitter is consistent with the appropriate hazardous locations certifications

Process leaks could result in death or serious injury.

- Install and tighten process connectors before applying pressure.

Electrical shock could cause death or serious injury.

- Avoid contact with the leads and terminals. High voltage that may be present on leads can cause electrical shock.

This device complies with Part 15 of the FCC Rules. Operation is subject to the following conditions: This device may not cause harmful interference. This device must accept any interference received, including interference that may cause undesired operation.

- This device must be installed to ensure a minimum antenna separation distance of 20 cm (8 in.) from all persons.

⚠ WARNING

Electrical shock can result in death or serious injury.

- Avoid contact with the leads and terminals.

Process leaks could result in death or serious injury.

- Install and tighten all four flange bolts before applying pressure.
- Do not attempt to loosen or remove flange bolts while the transmitter is in service.

Replacement equipment or spare parts not approved by Emerson Process Management for use as spare parts could reduce the pressure retaining capabilities of the transmitter and may render the instrument dangerous.

- Use only bolts supplied or sold by Emerson Process Management as spare parts.

Improper assembly of manifolds to traditional flange can damage sensor module.

- For safe assembly of manifold to traditional flange, bolts must break back plane of flange web (i.e., bolt hole) but must not contact sensor module housing.

The Power Module with the wireless unit contains a primary lithium-thionyl chloride battery. Each Power Module contains approximately 5.0 grams of lithium. Under normal conditions, the Power Module materials are self-contained and are not reactive as long as the batteries and the pack integrity are maintained. Care should be taken to prevent thermal, electrical or mechanical damage. Contacts should be protected to prevent premature discharge.

3.3 Considerations

3.3.1 Installation considerations

Measurement performance depends upon proper installation of the transmitter and impulse piping. Mount the transmitter close to the process and use a minimum of piping to achieve best performance. Also, consider the need for easy access, personnel safety, practical field calibration, and a suitable transmitter environment. Install the transmitter to minimize vibration, shock, and temperature fluctuation.

3.3.2 Wireless considerations

Power up sequence

The Power Module should not be installed on any wireless device until the Smart Wireless Gateway is installed and functioning properly. This transmitter uses the Green Power Module (order model number 701PGNKF). Wireless devices should also be powered up in order of proximity from the Smart Wireless Gateway, beginning with the closest. This will result in a simpler and faster network installation. Enable Active Advertising on the Gateway to ensure that new devices join the network faster. For more information, see the Smart Wireless Gateway Manual (Doc. No. 00809-0200-4420).

Internal antenna position

The internal antenna is designed for multiple mounting orientations. The transmitter should be mounted according to measurement best practices for your pressure measurement application. The antenna should be approximately 3 ft (1 m) from any large structure or building to allow clear communication to other devices.

Field communicator connections

In order for the Field Communicator to interface with the Rosemount 2051 Wireless Transmitter, the Power Module must be connected. Refer to Figure 3-1 for a diagram on how to connect the Field Communicator.

Figure 3-1. Field Communicator Connections

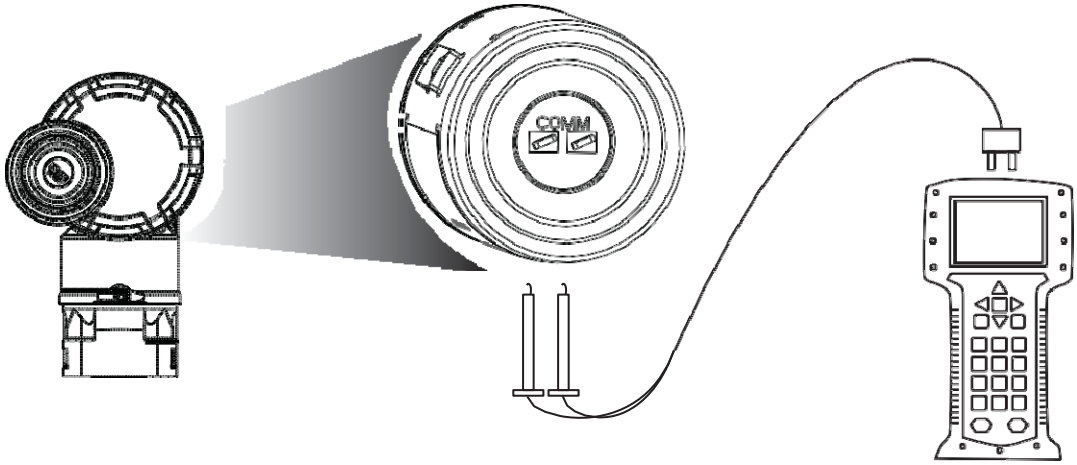

3.3.3 Mechanical considerations

Steam service

For steam service or for applications with process temperatures greater than the limits of the transmitter, do not blow down impulse piping through the transmitter. Flush lines with the blocking valves closed and refill lines with water before resuming measurement. Refer to Figure 3-11 on page 43 for correct mounting orientation.

Side mounted

When the transmitter is mounted on its side, position the Coplanar flange to ensure proper venting or draining. Mount the flange as shown in Figure 3-11 on page 43, keeping drain/vent connections on the bottom for gas service and on the top for liquid service.

3.3.4 Environmental considerations

Best practice is to mount the transmitter in an environment that has minimal ambient temperature change. The transmitter electronics temperature operating limits are –40 to 185 °F (–40 to 85 °C). Refer to Appendix A: Specifications and Reference Data that lists the sensing element operating limits. Mount the transmitter so that it is not susceptible to vibration and mechanical shock and does not have external contact with corrosive materials.

Figure 3-2. Installation Flowchart

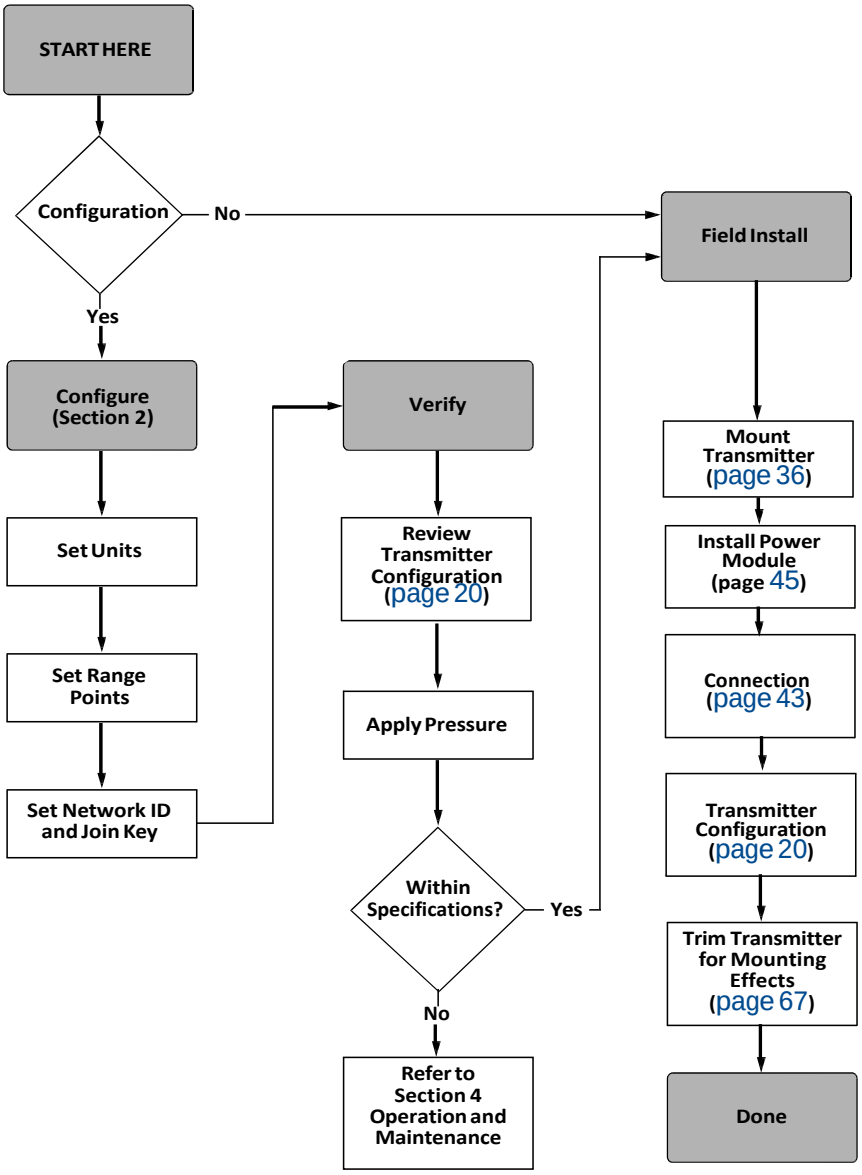

3.3.5 Draft range considerations

Installation

For the Rosemount 2051CD0 draft range pressure transmitter, it is best to mount the transmitter with the isolators parallel to the ground. See Figure 3-3 on page 34 for a draft range installation example on a 304 manifold. Installing the transmitter in this way reduces oil head effect.

Tilting of the transmitter may cause a zero shift in the transmitter output, but can be eliminated by performing a trim procedure.

Figure 3-3. Draft range installation example

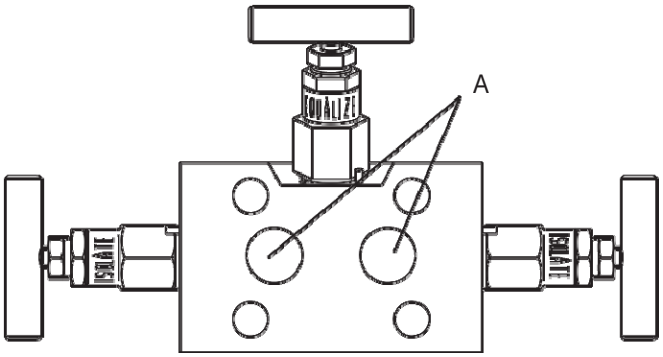

A. Isolators

Reducing process noise

Rosemount 2051CD0 draft transmitters are sensitive to small pressure changes. Increasing the damping will decrease output noise, but will further reduce response time. In gage applications, it is important to minimize pressure fluctuations to the low side isolator.

Output damping

The Damping command introduces a delay in processing which increases the response time of the transmitter; smoothing variations in output readings caused by rapid input changes. In the Rosemount 2051 Wireless pressure transmitter, damping only takes effect when the device is placed in high power refresh mode and during calibration. In normal power mode, the effective damping is 0. Note that when the device is in high power refresh mode, battery power will be depleted rapidly. Determine the appropriate damp setting based on the necessary response time, signal stability, and other requirements of the loop dynamics of your system. The damping value of your device is user selectable from 0 to 60 seconds.

Reference side filtering

In gage applications it is important to minimize fluctuations in atmospheric pressure to which the low side isolator is exposed.

One method of reducing fluctuations in atmospheric pressure is to attach a length of tubing to the reference side of the transmitter to act as a pressure buffer.

3.4 Installation procedures

For dimensional drawing information refer to Appendix A: Specifications and Reference Data on page 89.

Process flange orientation

Mount the process flanges with sufficient clearance for process connections. For safety reasons, place the drain/vent valves so the process fluid is directed away from possible human contact when the vents are used. In addition, consider the need for a testing or calibration input.

Note
Most transmitters are calibrated in the horizontal position. Mounting the transmitter in any other position will shift the zero point to the equivalent amount of liquid head pressure caused by the varied mounting position. To reset zero point, refer to "Sensor Trim" on page 68.

Consider housing rotation

The electronics housing can be rotated up to 180 degrees in either direction to improve field access, or to better view the optional LCD Display. To rotate the housing, perform the following procedure:

1. Loosen the housing rotation set screw using a $\frac{5}{64}$-in. hex wrench.
2. Retighten the housing rotation set screw.

Figure 3-4. Housing rotation

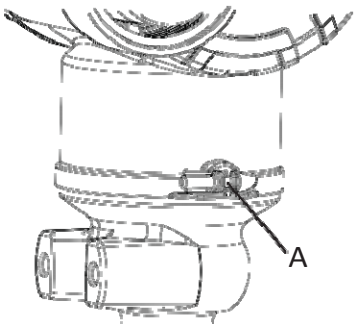

A. Housing Rotation Set Screw (5/64-in.)

Power Module side of electronics housing

Mount the transmitter so the Power Module side is accessible. Clearance of 3.5-in. (89 mm) is required for cover and Power Module removal.

Circuit side of electronics housing

Provide 1.75 in. (45 mm) of clearance for units without an LCD display. Three inches of clearance is required for cover removal if a meter is installed.

Environmental seal for housing

Always ensure a proper seal by installing the electronics housing cover(s) so that polymer contacts polymer (i.e. no o-ring visible). Use Rosemount O-rings.

3.4.1 Mount the transmitter

Mounting brackets

Rosemount 2051 transmitters may be panel-mounted or pipe-mounted via an optional mounting bracket. Refer to Table 3-1 for the complete offering and see Figure 3-5 on page 37 for dimensional and mounting configuration information.

Table 3-1. Mounting brackets

2051 brackets										
	Process connections			Mounting			Materials			
Option code	Coplanar	In-line	Traditional	Pipe mount	Panel mount	Flat panel mount	CS bracket	SST bracket	CS bolts	SST bolts
B4	X	X		X	X	X		X		X
B1			X	X			X		X	
B2			X		X		X		X	
B3			X			X	X		X	
B7			X	X			X			X
B8			X		X		X			X
B9			X			X	X			X
BA			X	X				X		X
BC			X			X		X		X

Figure 3-5. Mounting bracket option code B4

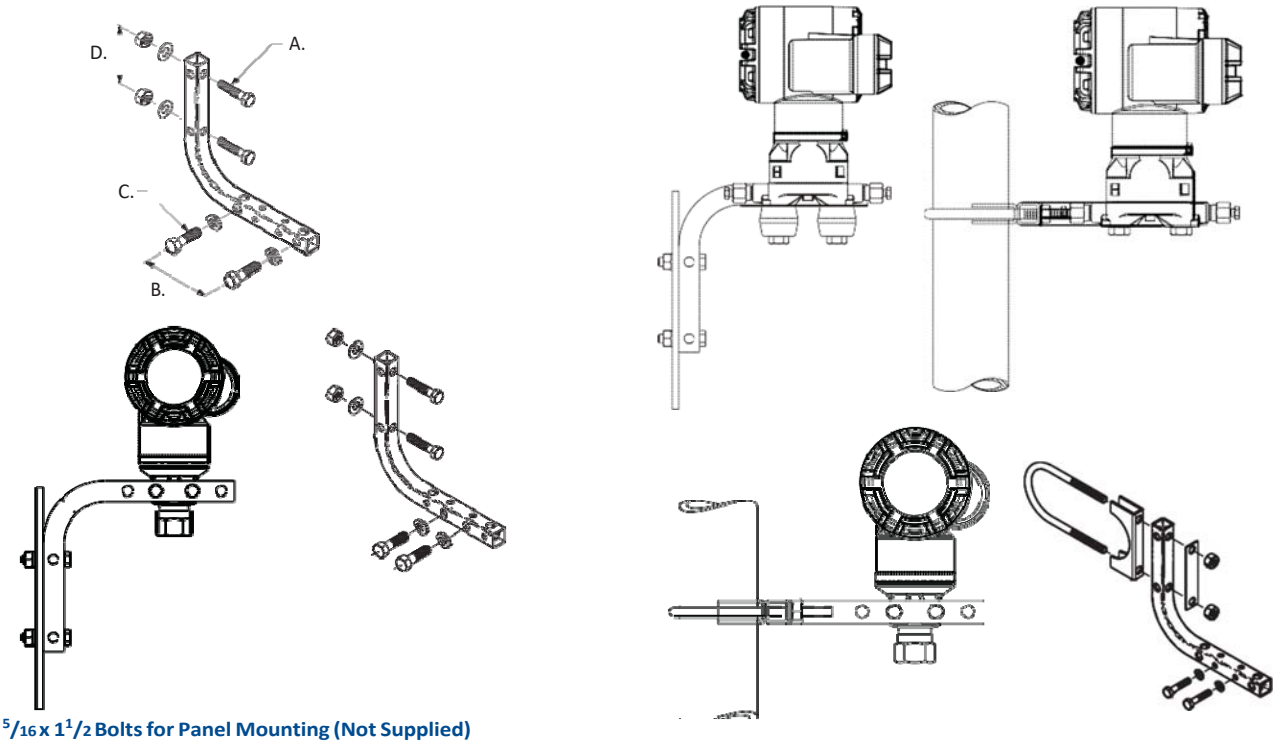

A. $^{5}/_{16}$ x $1^{1}/_{2}$ Bolts for Panel Mounting (Not Supplied)
B. 3.4 (85)
C. $^{3}/_{8}$-16 x $1^{1}/_{4}$ Bolts for Mounting to Transmitter
D. 2.8 (71)
Note: Dimensions are in inches (millimeters).

Flange bolts

The Rosemount 2051 can be shipped with a Coplanar flange or a Traditional flange installed with four 1.75-inch flange bolts. Mounting bolts and bolting configurations for the Coplanar and Traditional flanges can be found in Figure 3-6 on page 38. Stainless steel bolts supplied by Emerson Process Management are coated with a lubricant to ease installation. Carbon steel bolts do not require lubrication. No additional lubricant should be applied when installing either type of bolt. Bolts supplied by Emerson Process Management are identified by their head markings:

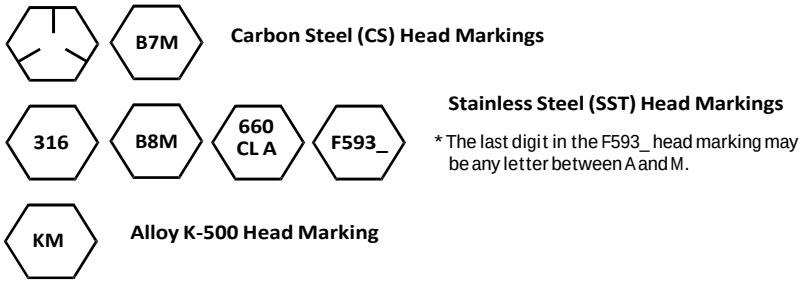

Bolt installation

⚠ Only use bolts supplied with the Rosemount 2051 or sold by Emerson Process Management as spare parts. When installing the transmitter to one of the optional mounting brackets, torque the bolts to 125 in-lb. (0,9 N-m). Use the following bolt installation procedure:

1. Finger-tighten the bolts.
2. Torque the bolts to the initial torque value using a crossing pattern.
3. Torque the bolts to the final torque value using the same crossing pattern.

Torque values for the flange and manifold adapter bolts are as follows:

Table 3-2. Bolt Installation Torque Values

Bolt Material	Initial Torque Value	Final Torque Value
CS-ASTM-A445 Standard	300 in.-lb (34 N-m)	650 in.-lb (73 N-m)
316 SST—Option L4	150 in.-lb (17 N-m)	300 in.-lb (34 N-m)
ASTM-A-193-B7M—Option L5	300 in.-lb (34 N-m)	650 in.-lb (73 N-m)
Alloy K-500—Option L6	300 in.-lb (34 N-m)	650 in.-lb (73 N-m)
ASTM-A-453-660—Option L7	150 in.-lb (17 N-m)	300 in.-lb (34 N-m)
ASTM-A-193-B8M—Option L8	150 in.-lb (17 N-m)	300 in.-lb (34 N-m)

Figure 3-6. Traditional flange bolt configurations

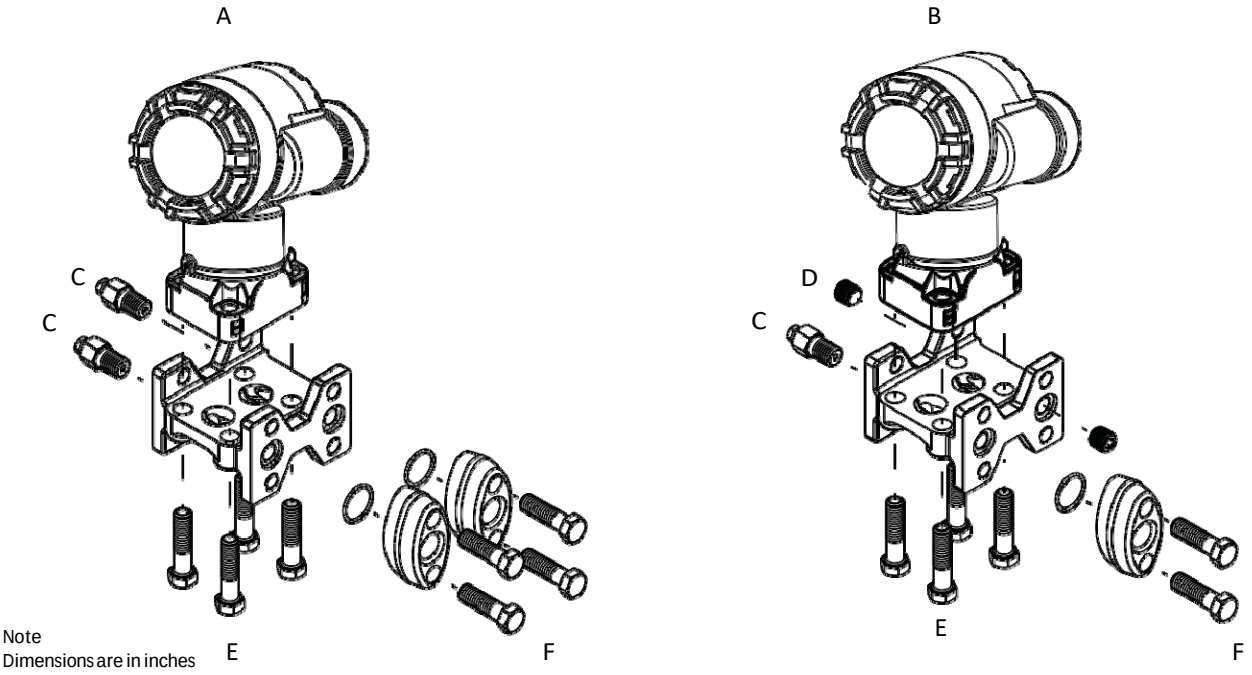

A. Differential Transmitter
B. Gage/Absolute Transmitter
C. Drain/Vent
D. Vented fitting
E. 1.75 (44) × 4
F. 1.50 (38) × 4[(1)]

(1) For Gage and Absolute Transmitters: 150 (38) x 2

Figure 3-7. Mounting bolts and bolt configurations for coplanar flange

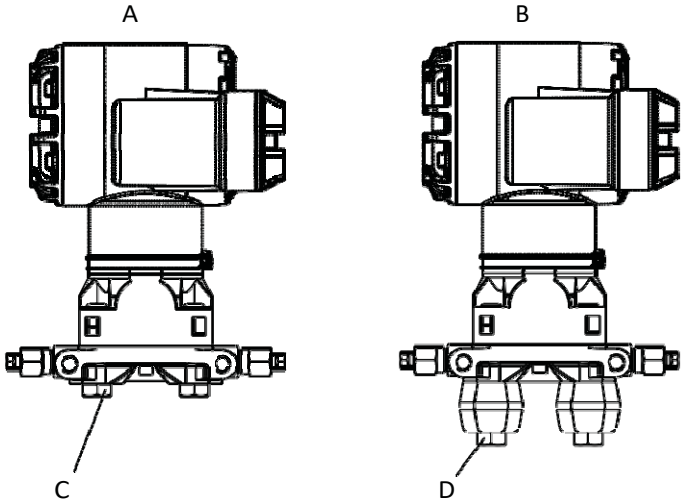

Description	Qty	Size in. (mm)
Differential Pressure		
Flange Bolts	4	1.75 (44)
Flange/Adapter Bolts	4	2.88 (73)
Gage/Absolute Pressure [(1)]		
Flange Bolts	4	1.75 (44)
Flange/Adapter Bolts	2	2.88 (73)

(1) Rosemount 2051T transmitters are direct mount and do not require bolts for process connection.

A. Transmitter with flange bolts
B.Transmitter with flange adapters and flange/adapter bolts
C. 1.75 (44) × 4
D. 2.88 (73) × 4
Note: Dimensions are in inches (millimeters).

Figure 3-8. Mounting bracket option codes B1, B7, and BA

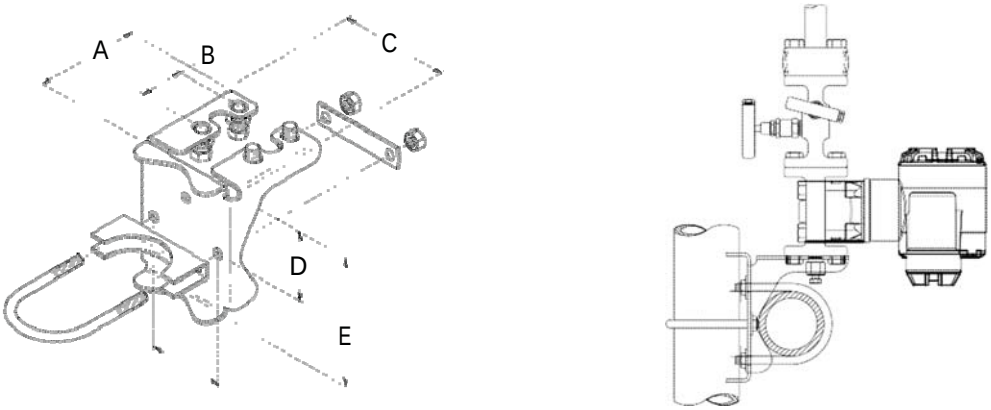

A. 3.75 (95)
B. 1.63 (41)
C. 4.09 (104)
D. 2.73 (69)
E. 4.97 (126)

Figure 3-9. Panel mounting bracket option codes B2 and B8

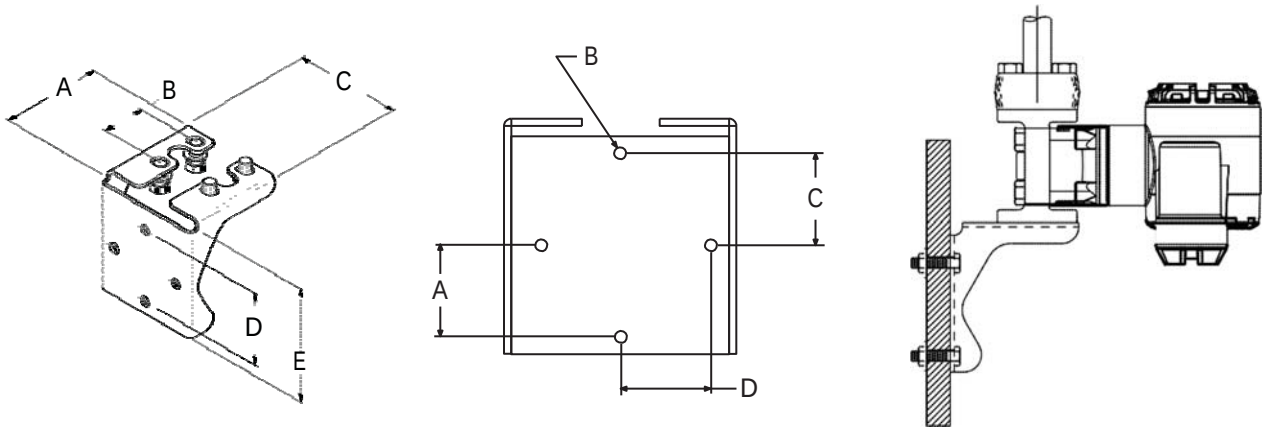

A. 3.75 (95)
B. 1.63 (41)
C. 4.09 (104)
D. 2.81 (71)
E. 4.5 (114)

A. 1.40 (36)
B. Mounting Holes 0.375 Diameter (10)
C. 1.405 (35,7)
D. 1.405 (35,7)

Figure 3-10. Flat mounting bracket option codes B3 and BC

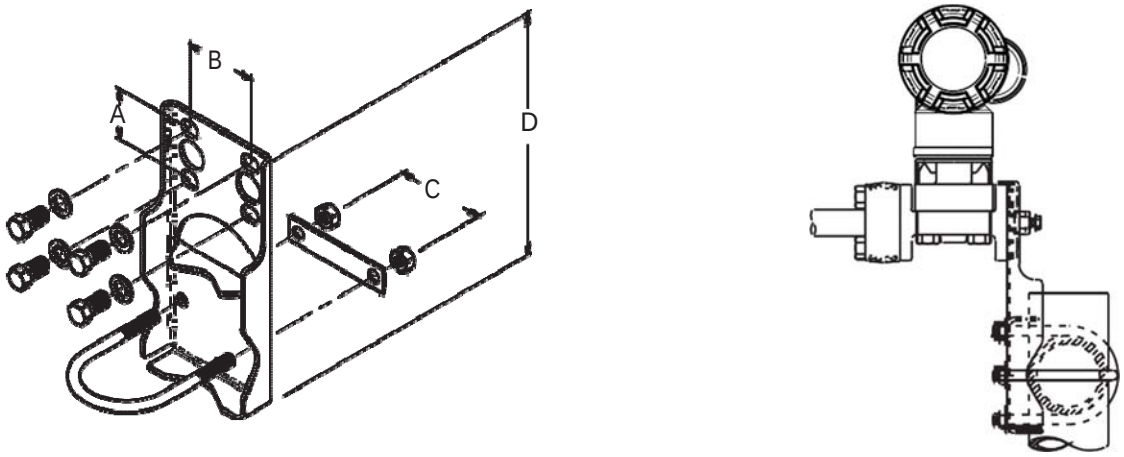

A. 1.625 (41)
B. 2.125 (54)
C. 2.81 (71)
D. 8.00 (203)
Note: Dimensions are in inches (millimeters).

3.4.2 Impulse piping

Best practices

The piping between the process and the transmitter must accurately transfer the pressure to obtain accurate measurements. There are five possible sources of error: leaks, friction loss (particularly if purging is used), trapped gas in a liquid line, liquid in a gas line, and density variations between the legs.

The best location for the transmitter in relation to the process pipe depends on the process itself. Use the following guidelines to determine transmitter location and placement of impulse piping:

- Keep impulse piping as short as possible.
- For liquid service, slope the impulse piping at least 1 inch per foot (8 cm per m) upward from the transmitter toward the process connection.
- For gas service, slope the impulse piping at least 1 inch per foot (8 cm per m) downward from the transmitter toward the process connection.
- Avoid high points in liquid lines and low points in gas lines.
- Make sure both impulse legs are the same temperature.
- Use impulse piping large enough to avoid friction effects and blockage.
- Vent all gas from liquid piping legs.
- When using a sealing fluid, fill both piping legs to the same level.
- When purging, make the purge connection close to the process taps and purge through equal lengths of the same size pipe. Avoid purging through the transmitter.
- Keep corrosive or hot (above 250 °F [121 °C]) process material out of direct contact with the sensor module and flanges.
- Prevent sediment deposits in the impulse piping.
- Keep the liquid head balanced on both legs of the impulse piping.
- Avoid conditions that might allow process fluid to freeze within the process flange.

Mounting Requirements

Refer to Figure 3-11 on page 43 for examples of the following mounting configurations:

Liquid Flow Measurement

- Place taps to the side of the line to prevent sediment deposits on the process isolators.
- Mount the transmitter beside or below the taps so gases vent into the process line.
- Mount drain/vent valve upward to allow gases to vent.

Gas Flow Measurement

- Place taps in the top or side of the line.
- Mount the transmitter beside or above the taps so to drain liquid into the process line.

Steam Flow Measurement

- Place taps to the side of the line.
- Mount the transmitter below the taps to ensure that impulse piping will remain filled with condensate.
- Fill impulse lines with water to prevent steam from contacting the transmitter directly and to ensure accurate measurement start-up.

Note
For steam or other elevated temperature services, it is important that temperatures at the Coplanar process flanges must not exceed 250 °F (121 °C) for transmitters with silicone fill, or 185 °F (85 °C) for inert fill. For vacuum service, these temperature limits are reduced to 220 °F (104 °C) for silicone fill and 160 °F (71 °C) for inert fill.

Figure 3-11. Installation examples

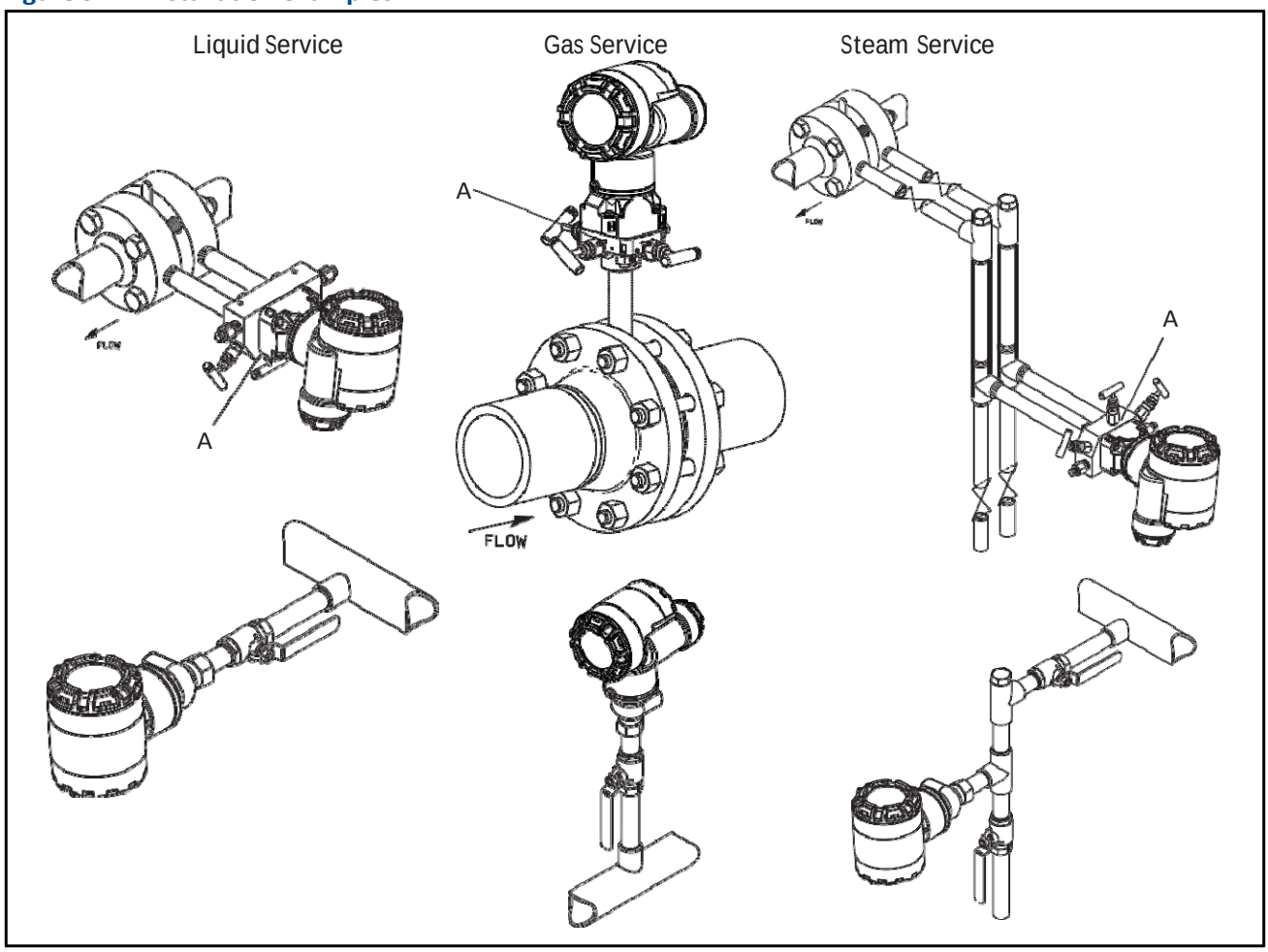

A. Drain/vent valves

3.4.3 Process connections

Coplanar or traditional process connection

⚠ Install and tighten all four flange bolts before applying pressure to avoid leakage. When properly installed, the flange bolts will protrude through the top of the sensor module housing. Do not attempt to loosen or remove the flange bolts while the transmitter is in service.

Flange adapters

⚠ Rosemount 2051DP and GP process connections on the transmitter flanges are 1/4–18 NPT. Flange adapters are available with standard 1/2–14 NPT Class 2 connections. The flange adapters allow users to disconnect from the process by removing the flange adapter bolts. Use plant-approved lubricant or sealant when making the process connections. Refer to Dimensional Drawings on page 101 for the distance between pressure connections. This distance may be varied ±1/4 in. (6.4 mm) by rotating one or both of the flange adapters.

To install adapters to a Coplanar flange, perform the following procedure:

1. Remove the flange bolts.
2. Leaving the flange in place, move the adapters into position with the O-ring installed.
3. Clamp the adapters and the Coplanar flange to the transmitter module using the longer of the bolts supplied.
4. Tighten the bolts. Refer to "Flange bolts" on page 37 for torque specifications.

⚠ WARNING

Failure to install proper flange adapter o-rings may cause process leaks, which can result in death or serious injury. The two flange adapters are distinguished by unique o-ring grooves. Only use the o-ring that is designed for its specific flange adapter, as shown below.

ROSEMOUNT 2051S / 2051 / 2051 / 3001 / 3095

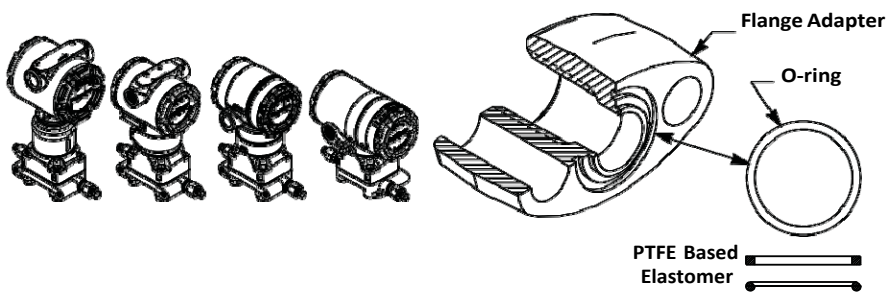

Note
PTFE O-rings should be replaced if the flange adapter is removed.

Whenever you remove flanges or adapters, visually inspect the PTFE O-rings. Replace them if there are any signs of damage, such as nicks or cuts. If you replace the O-rings, re-torque the flange bolts after installation to compensate for cold flow. Refer to the process sensor body reassembly procedure in Section 6: Troubleshooting on page 83.

3.4.4 Inline process connection

Inline gage transmitter orientation

⚠ CAUTION

Interfering or blocking the atmospheric reference port will cause the transmitter to output erroneous pressure values.

The low side pressure port on the inline gage transmitter is located in the neck of the transmitter, behind the housing. The vent path is 360 degrees around the transmitter between the housing and sensor (See Figure 3-12).

Keep the vent path free of any obstruction, such as paint, dust, and lubrication by mounting the transmitter so that the process can drain away.

Figure 3-12. Inline gage low side pressure port

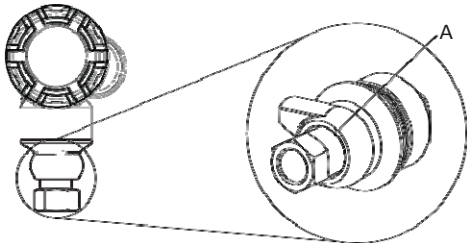

A. Low side pressure port (atmospheric reference)

⚠ WARNING

Do not apply torque directly to the sensor module. Rotation between the sensor module and the process connection can damage the electronics. To avoid damage, apply torque only to the hex-shaped process connection.

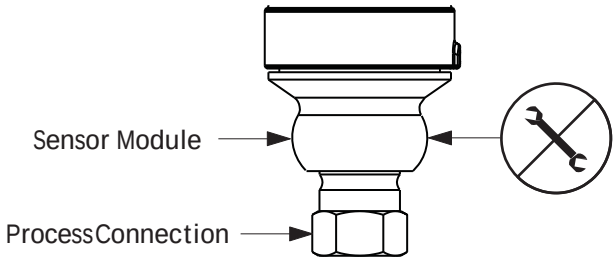

3.4.5 Power Module installation

Figure 3-13. Power Module

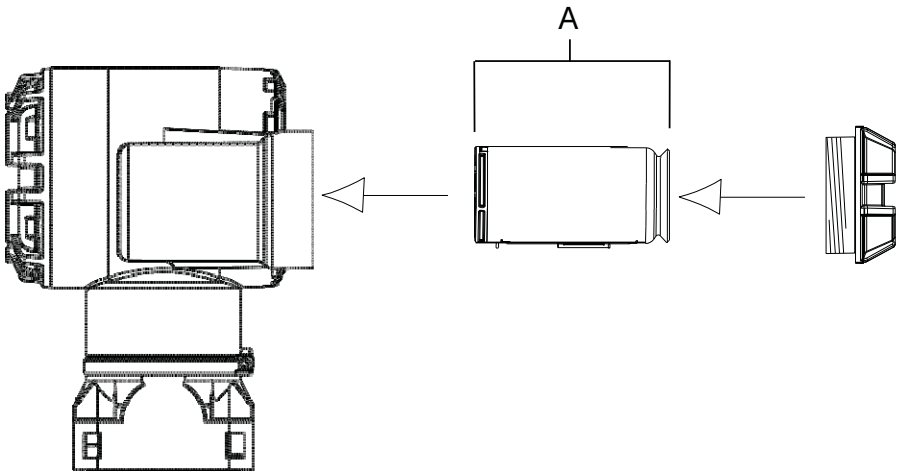

A. Power Module (5/64-inch hex wrench required)

To make connections, perform the following procedure:

1. Remove the housing cover on the Power Module compartment side. The Power Module supplies all power to the transmitter.
2. Connect Power Module 701PGNKF.
3. Replace the Power Module cover and tighten to safety specification (polymer to polymer).

3.4.6 Installing the LCD display

Transmitters ordered with the LCD display will be shipped with the display installed.

Note
Only use Rosemount Wireless LCD Part Number: 00753-9004-0002

Note
An LCD from a wired device will not function in a wireless device.

In addition to housing rotation, the optional LCD display can be rotated in 90-degree increments by squeezing the two tabs, pulling out, rotating and snapping back into place.

If LCD pins are inadvertently removed from the interface board, carefully re-insert the pins before snapping the LCD display back into place.

Use the following procedure and Figure 3-14 to install the LCD display:

1. Remove the back cover and Power Module.
2. Remove the transmitter cover opposite the field terminal side. Do not remove the instrument covers in explosive environments when the circuit is live.
3. Engage the four-pin connector into the LCD display and snap into place.

Note the following LCD temperature limits:

Operating: –40 to 175 °F (–40 to 80 °C)

Storage: –40 to 185 °F (–40 to 85 °C)

Figure 3-14. Optional LCD Display

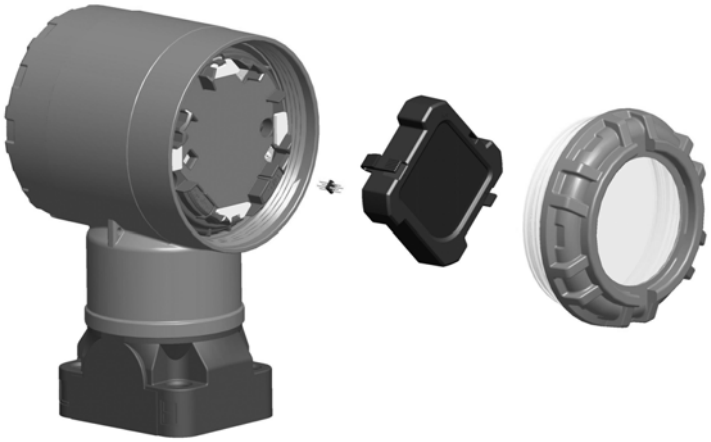

3.5 Rosemount 304, 305 and 306 integral manifolds

The Rosemount 305 Integral Manifold mounts directly to the transmitter and is available in two designs: Traditional and Coplanar. The traditional 305 Integral Manifold can be mounted to most primary elements with mounting adapters in the market today. The Rosemount 306 Integral Manifold is used with Rosemount 2051T In-line transmitters to provide block-and-bleed valve capabilities of up to 10000 psi (690 bar). The Rosemount 304 comes in two basic styles: traditional (flange x flange and flange x pipe) and wafer. The 304 traditional manifold comes in 2, 3, and 5-valve configurations. The 304 wafer manifold comes in 3 and 5 valve configurations.

Figure 3-15. Integral Manifold Designs

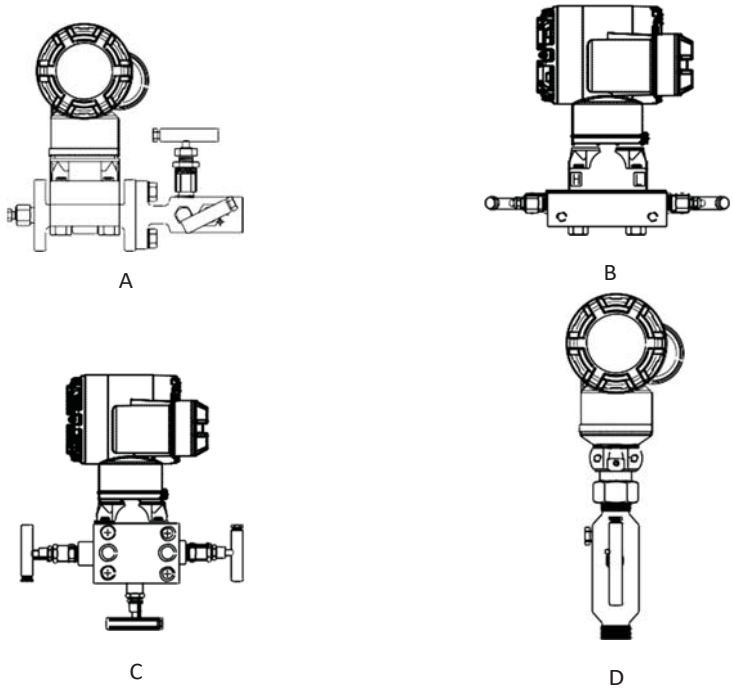

A. 2051C and 304 Conventional
B. 2051C and 305 Integral Coplanar
C. 2051C and 305 Integral Traditional
D. 2051T and 306 In-Line

3.5.1 Rosemount 305 Integral Manifold installation procedure

To install a 305 Integral Manifold to a 2051 Wireless transmitter:

1. Inspect the PTFE sensor module O-rings. If the O-rings are undamaged, reusing them is recommended. If the O-rings are damaged (if they have nicks or cuts, for example), replace them with new O-rings.

Important
If replacing the O-rings, take care not to scratch or deface the O-ring grooves or the surface of the isolating diaphragm while you remove the damaged O-rings.

2. Install the Integral Manifold on the sensor module. Use the four 2.25-in. manifold bolts for alignment. Finger tighten the bolts, then tighten the bolts incrementally in a cross pattern as seen in Figure 3-16 on page 49 to final torque value. See "Flange bolts" on page 37 for complete bolt installation information and torque values. When fully tightened, the bolts should extend through the top of the module housing.

Figure 3-16. Bolt tightening pattern

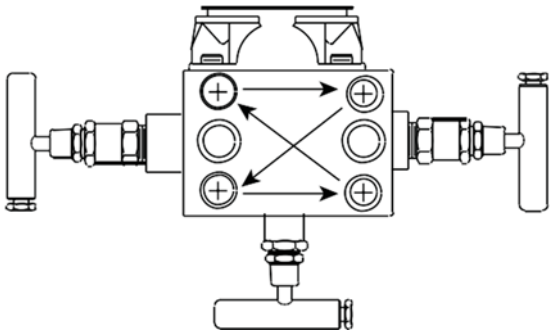

3. If the PTFE sensor module O-rings have been replaced, the flange bolts should be re-tightened after installation to compensate for cold flow of the O-rings.

4. If applicable, install flange adapters on the process end of the manifold using the 1.75-in. flange bolts supplied with the transmitter.

Note
Always perform a zero trim on the transmitter/manifold assembly after installation to eliminate mounting effects. See Section 5: Operation and maintenance, "Sensor Trim" on page 68.

3.5.2 Rosemount 306 Integral Manifold installation procedure

The 306 Manifold is for use only with a 2051T Wireless In-line transmitter.

⚠ Assemble the 306 Manifold to the 2051T Wireless In-line transmitter with a thread sealant.

1. Place transmitter into holding fixture.

2. Apply appropriate thread paste or tape to threaded instrument end of the manifold.

3. Count total threads on the manifold before starting assembly.

4. Start turning the manifold by hand into the process connection on the transmitter.

Note
If using thread tape, be sure the thread tape does not strip when the manifold assembly is started.

5. Wrench tighten manifold into process connection. (Note: Minimum toque value is 425 in-lbs)

6. Count how many threads are still showing. (Note: Minimum engagement is 3 revolutions)

7. Subtract the number of threads showing (after tightening) from the total threads to calculate the revolutions engaged. Further tighten until a minimum of 3 rotations is achieved.

8. For block and bleed manifold, verify the bleed screw is installed and tightened. For two-valve manifold, verify the vent plug is installed and tightened.

9. Leak-check assembly to maximum pressure range of transmitter.

3.5.3 Rosemount 304 Conventional Manifold installation procedure

To install a 304 Conventional Manifold to a 2051 Wireless transmitter:

1. Align the Conventional Manifold with the transmitter flange. Use the four manifold bolts for alignment.

2. Finger tighten the bolts, then tighten the bolts incrementally in a cross pattern to final torque value. See "Flange bolts" on page 37 for complete bolt installation information and torque values. When fully tightened, the bolts should extend through the top of the sensor module housing.

3. If applicable, install flange adapters on the process end of the manifold using the 1.75-in. flange bolts supplied with the transmitter.

3.5.4 Manifold operation

⚠ Improper installation or operation of manifolds may result in process leaks, which may cause death or serious injury.

Always perform a zero trim on the transmitter/manifold assembly after installation to eliminate any shift due to mounting effects. See Section 5: Operation and maintenance, "Sensor Trim Overview" on page 67.

Three and five-valve configurations shown:

In normal operation the two block valves between the process and instrument ports will be open and the equalizing valve will be closed.

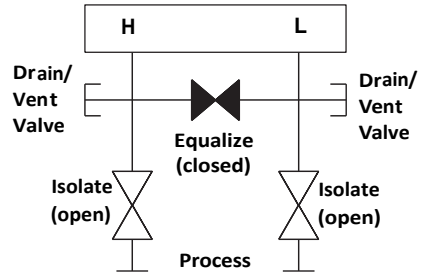

1. To zero the 2051, close the block valve to the low pressure (downstream) side of the transmitter first.

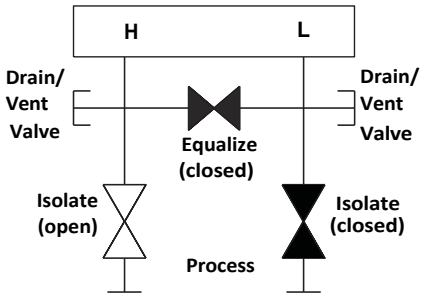

2. Open the center (equalize) valve to equalize the pressure on both sides of the transmitter. The manifold valves are now in the proper configuration for zeroing the transmitter.

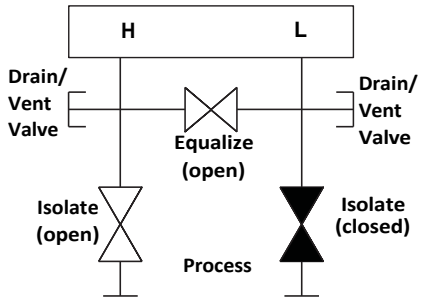

3. After zeroing the transmitter, close the equalizing valve.

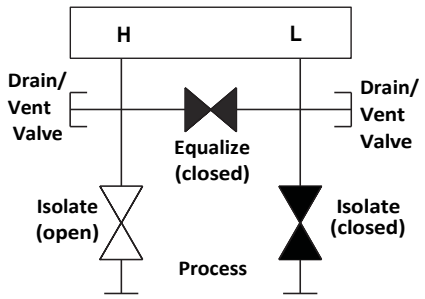

4. Open the block valve on the low pressure side of the transmitter to return the transmitter to service.

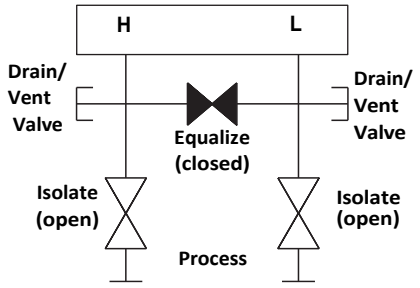

Five-valve Natural Gas configurations shown:

In normal operation, the two block valves between the process and instrument ports will be open, and the equalizing valves will be closed.

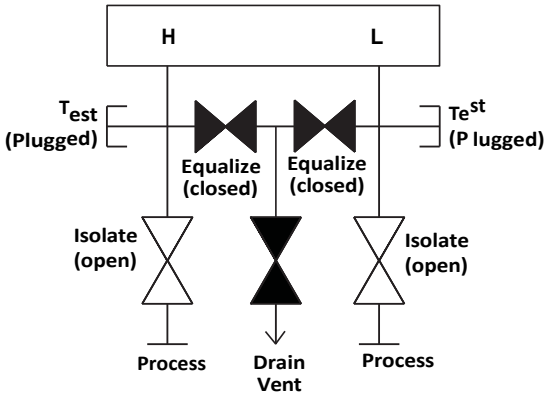

1. To zero the 2051, first close the block valve on the low pressure (downstream) side of the transmitter.

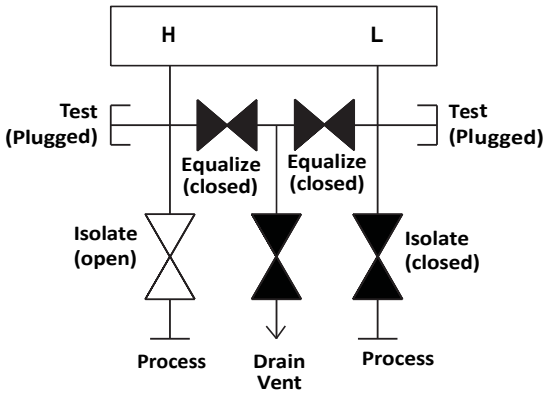

Note
Do not open the low side equalize valve before the high side equalize valve. Doing so will overpressure the transmitter.

2. Open the equalize valve on the high pressure (upstream) side of the transmitter.

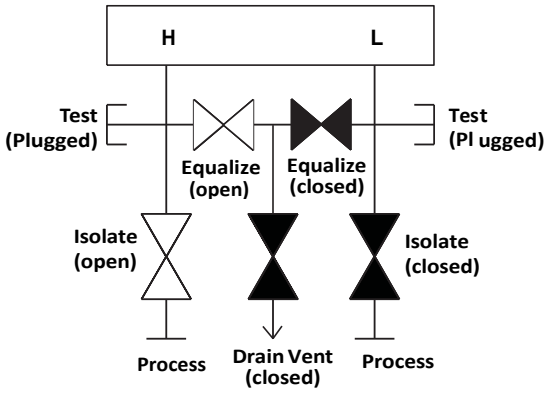

3. Open the equalize valve on the low pressure (downstream) side of the transmitter. The manifold is now in the proper configuration for zeroing the transmitter.

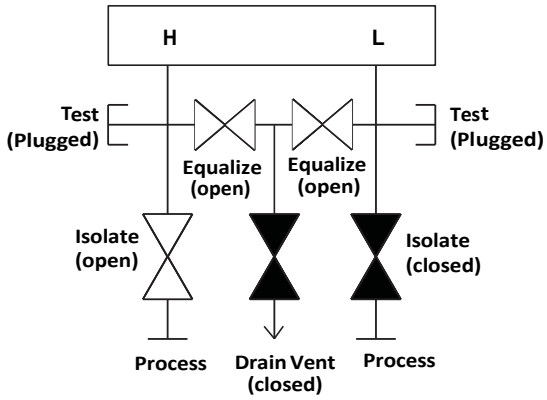

4. After zeroing the transmitter, close the equalize valve on the low pressure (downstream) side of the transmitter.

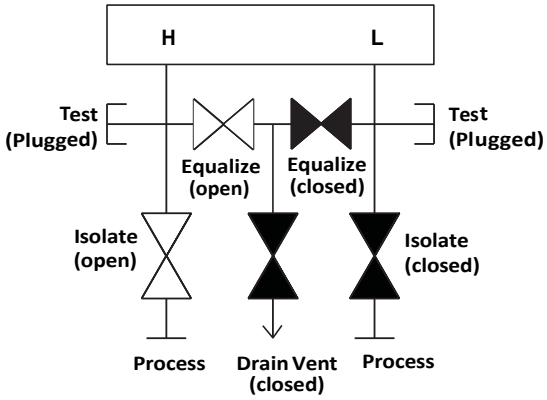

5. Close the equalize valve on the high pressure (upstream) side.

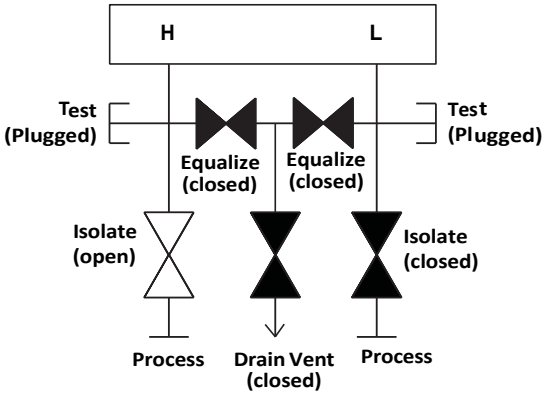

6. Finally, to return the transmitter to service, open the low side isolation valve.

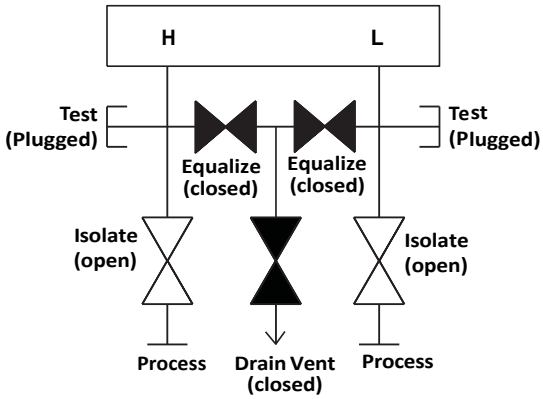

Section 4 Commissioning

Safety messages . . . . . **page 55**
Viewing network status . . . . . **page 57**
Verifying operation . . . . . **page 57**

4.1 Overview

The information in this section covers installation considerations for the Rosemount 2051 Wireless Pressure Transmitter. A Quick Installation Guide is shipped with every transmitter to describe pipe-fitting, wiring procedures and basic configuration for initial installation.

Note
For transmitter disassembly refer to sections 6.3: Removing from service on page 88.

4.2 Safety messages

Instructions and procedures in this section may require special precautions to ensure the safety of the personnel performing the operations. Information that potentially raises safety issues is indicated by a warning symbol (⚠. Please refer to the following safety messages before performing an operation preceded by this symbol.

4.2.1 Warnings (⚠)

⚠ WARNING

Failure to follow these installation guidelines could result in death or serious injury.

- Make sure only qualified personnel perform the installation.

Explosions could result in death or serious injury:

Installation of this transmitter in an explosive environment must be in accordance with the appropriate local, national, and international standards, codes, and practices. Please review the approvals section of the 2051 Wireless reference manual for any restrictions associated with a safe installation.

- Before connecting a Field Communicator in an explosive atmosphere, make sure the instruments are installed in accordance with intrinsically safe or non-incendive field wiring practices.
- Verify that the operating atmosphere of the transmitter is consistent with the appropriate hazardous locations certifications

Process leaks could result in death or serious injury.

- Install and tighten process connectors before applying pressure.

Electrical shock could cause death or serious injury.

- Avoid contact with the leads and terminals. High voltage that may be present on leads can cause electrical shock.

This device complies with Part 15 of the FCC Rules. Operation is subject to the following conditions: This device may not cause harmful interference. This device must accept any interference received, including interference that may cause undesired operation.

- This device must be installed to ensure a minimum antenna separation distance of 20 cm (8 in.) from all persons.

4.3 Viewing network status

If the Rosemount 2051 Wireless was configured with the Network ID and Join Key and sufficient time for network polling has passed, the transmitter should be connected to the network. To verify connectivity, open the Smart Wireless Gateway's integral web interface and navigate to the Explorer page.

This page will display the transmitter's HART tag, PV, SV, TV, QV, and Update Rate. A green status indicator means that the device is working properly. A red indicator means that there is a problem with either the device or its communication path. For more detail on a specific device, click on the tag name.

4.4 Verifying operation

Operation can be verified in four locations, at the device via the Local Display, using the Field Communicator, at the Smart Wireless Gateway's integrated web interface, or by using AMS Suite Wireless Configurator or AMS Device Manager.

Local Display

The LCD will display the PV value at the same rate as the configured update rate. Press the Diagnostic button to display the TAG, Device ID, Network ID, Network Join Status and Device Status screens.

For Device Status screens, see "LCD Screen Messages" on page 73.

Figure 4-1. Diagnostic Screen Sequence

Tag	Device ID	Network ID	Network Join Status	Device Status
Abcde fgh	id - 12 345678	netwk 1305 ID	netwk OK	Suply 3.60 volts

Figure 4-2. Network Join Status Screens

Searching for Network	Joining Network	Connected with Limited Bandwidth	Connected
NETwK SRCHNG	netwk NEGOT	netwk LIM-OP	netwk OK

Field Communicator

For HART Wireless transmitter communication, a Rosemount 2051 Wireless DD is required. To obtain the latest DD, visit the Emerson Process Management Easy Upgrade site at: http://www2.emersonprocess.com/en-US/documentation/deviceinstallkits. The communication status may be verified in the wireless device using the following Fast Key sequence.

Function	Key Sequence	Menu Items
Communications	3, 4	Join Status, Join Mode, Number of Available Neighbors, Number of Advertisements Heard, Number of Join Attempts

Smart Wireless Gateway

Using the Gateway's web interface, navigate to the Explorer page as shown in Figure 4-3 on page 59. Locate the device in question and verify all status indicators are good (green).

Figure 4-3. Smart Wireless Gateway Explorer page.

AMS Suite Wireless Configurator

When the device has joined the network, it will appear in the Device Manager as illustrated in Figure 4-4. For HART Wireless transmitter communication, a Rosemount 2051 Wireless DD is required. To obtain the latest DD, visit the Emerson Process Management Easy Upgrade site at: http://www2.emersonprocess.com/en-US/documentation/deviceinstallkits.

Figure 4-4. Device Manager

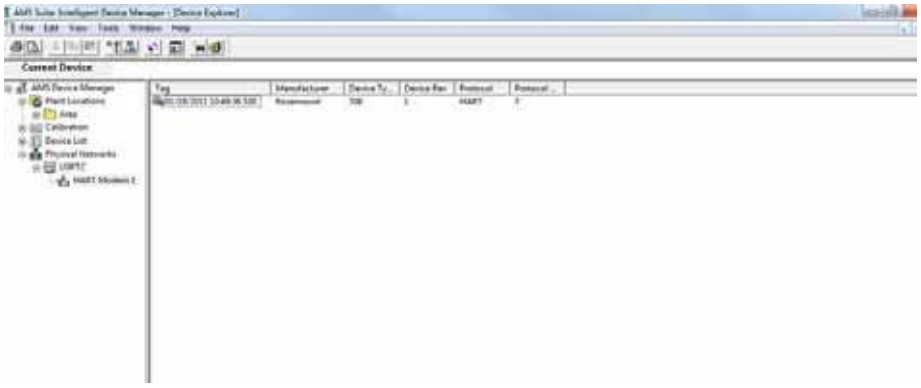

Troubleshooting

If the device is not joined to the network after power up, verify the correct configuration of the Network ID and Join Key, and that Active Advertising has been enabled on the Gateway. The Network ID and Join Key in the device must match the Network ID and Join Key of the Gateway.

The Network ID and Join Key may be obtained from the Gateway on the Setup>Network>Settings page of the web server (see Figure 4-5 on page 60). The Network ID and Join Key may be changed in the wireless device by following the Fast Key sequence shown below.

Function	Key Sequence	Menu Items
Join Device to Network	2, 1, 3	Network ID, Set Join Key

Figure 4-5. Smart Wireless Gateway Network Settings

4.4.1 Using the Field Communicator

Note
In order to communicate with a Field Communicator, power the Rosemount 2051 Wireless Transmitter by connecting the Power Module. For more information on the Power Module, refer to the Power Module product data sheet (Document No 00813-0100-4701).

Table 4-1 includes Fast Key sequences frequently used to interrogate and configure the device.

Table 4-1. Rosemount 2051 Wireless Fast Key Sequence

Function	Key Sequence	Menu Items
Device Information	2, 2, 9	Identification, Model Numbers, Flange Information, Remote Seal Information, Serial Number
Guided Setup	2, 1	Basic Setup, Join Device to Network, Configure Update Rates, Alert Setup
Manual Setup	2, 2	Wireless, Sensor, HART, Security, Device Information, Power
Wireless	2, 2, 1	Network ID, Join Device to Network, Broadcast Information

Figure 4-6. Field Communicator Connections

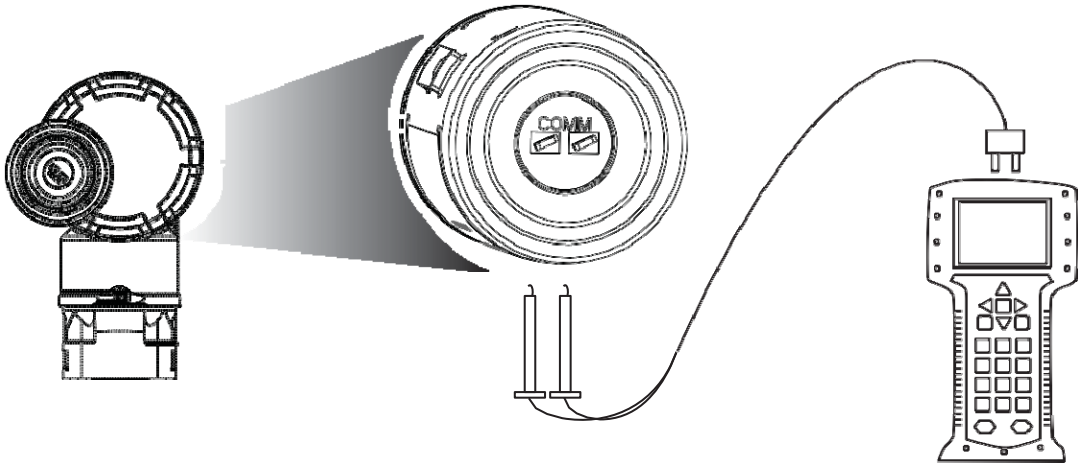

4.5 Configuring transmitter security

There are two security methods with the Rosemount 2051 Wireless transmitter.

- HART Lock
- Configuration Buttons lock

HART lock

The HART Lock prevents changes to the transmitter configuration from all sources; all changes requested via HART and local configuration buttons will be rejected. The HART Lock can only be set via HART communication. The HART Lock can be enabled or disabled with a Field Communicator or AMS Device Manager.

Configuring HART Lock using Field Communicator

From the *HOME* screen, enter the fast key sequence

Device Dashboard Fast Keys	2, 2, 7, 2

Configuring HART Lock using AMS Device Manager

1. Right click on the device and select **Configure**.
2. Under Manual Setup select the **Security** tab.
3. Click **Lock/Unlock** button under HART Lock (Software) and follow the screen prompts.

Configuration Button lock

The configuration button lock disables all local button functionality. Changes to the transmitter configuration from the local buttons will be rejected. Local external keys can be locked via HART communication only.

Configuring configuration button lock using a Field Communicator

From the *HOME* screen, enter the fast key sequence

Device Dashboard Fast Keys	2, 2, 7, 4

Configuring configuration button lock using AMS device Manager

1. Right click on the device and select **Configure**.
2. Under Manual Setup select the **Security** tab.
3. Within the Configuration Buttons dropdown menu select **Disabled** to lock external local keys.
4. Click **Send**.
5. Confirm service reason and click **Yes**.

Section 5 Operation and maintenance

Overview . . . . . page 63
Calibration overview . . . . . page 63
LCD Screen Messages . . . . . page 73

5.1 Overview

This section contains information on commissioning and operating 2051 Wireless Pressure Transmitters.

Field Communicator and AMS instructions are given to perform configuration functions. For convenience, Field Communicator fast key sequences are labeled "Fast Keys" for each software function below the appropriate headings.

5.2 Safety messages

Instructions and procedures in this section may require special precautions to ensure the safety of the personnel performing the operations. Information that potentially raises safety issues is indicated by a warning symbol (⚠. Please refer to the following safety messages before performing an operation preceded by this symbol.

5.3 Calibration overview

Calibrating a 2051 Wireless transmitter may include the following procedures:

- Sensor Trim: Adjusts the position of the factory sensor characterization curve to optimize performance over a specified pressure range, or to adjust for mounting effects.

The Rosemount 2051 sensor module contains information about the sensor's specific characteristics in response to pressure and temperature inputs. A smart transmitter compensates for these sensor variations. The process of generating the sensor performance profile is called factory sensor characterization.

Sensor trimming requires an accurate pressure input and adds additional compensation that adjusts the position of the factory sensor characterization curve to optimize performance over a specific pressure range.

Note
Sensor trimming adjusts the position of the factory sensor characterization curve. It is possible to degrade performance of the transmitter if the trim is done improperly or with inaccurate equipment.

⚠ CAUTION

Absolute pressure transmitters (2051CA and 2051TA) are calibrated at the factory. Trimming adjusts the position of the factory characterization curve. It is possible to degrade performance of the transmitter if any trim is done improperly or with inaccurate equipment.

Table 5-1. Recommended Calibration Tasks

Transmitter	Bench Calibration Tasks	Field Calibration Tasks
2051CD 2051CG 2051L 2051TG, Range 1-4	1. Set output configuration parameters: a. Set the range points. b. Set the output units. c. Set the output type. 2. *Optional*: Perform a sensor trim. (Accurate pressure source required.)	1. Reconfigure parameters if necessary. 2. Zero trim the transmitter to compensate for mounting effects or static pressure effects.
2051CA 2051TA 2051TG, Range 5	1. Set output configuration parameters: a. Set the range points. b. Set the output units. c. Set the output type. 2. *Optional*: Perform a sensor trim if equipment available (accurate absolute pressure source required), otherwise perform the low trim value section of the sensor trim procedure.	1. Reconfigure parameters if necessary. 2. Perform low trim value section of the sensor trim procedure to correct for mounting position effects.

Note:
For 2051CA, 2051TA range 0 and range 5 devices, an accurate absolute pressure source is required.

5.3.1 Determining necessary Sensor Trims

Bench calibrations allow for calibrating the instrument for its desired range of operation. Straight forward connections to pressure source allow for a full calibration at the planned operating points. Exercising the Transmitter over the desired pressure range allows for verification of the output value. "Sensor Trim" on page 68 discusses how the trim operations change the calibration. It is possible to degrade the performance of the transmitter if a trim is done improperly or with inaccurate equipment. The transmitter can be set back to factory settings using the Recall Factory Trim command in "Recall Factory Trim—Sensor Trim" on page 70.

For transmitters that are field installed, the manifolds discussed in "Rosemount 304, 305 and 306 integral manifolds" on page 47 allow the differential transmitter to be zeroed using the zero trim function. Both 3-valve and 5-valve manifolds are discussed. This field calibration will eliminate any pressure offsets caused by mounting effects (head effect of the oil fill) and static pressure effects of the process.

Determine the necessary trims with the following steps.

1. Apply Pressure
2. Check digital pressure, if the digital pressure does not match the applied pressure, perform a digital zero trim. See "Sensor Trim" on page 68.

Trimming with configuration buttons

Local configuration buttons are buttons located inside the housing of the transmitter. To access the buttons, remove the housing cover.

- **Digital Zero Trim (DZ):** Used for performing a sensor zero trim. See "Recommended Calibration Tasks" on page 64 for trim instructions.

Figure 5-1 shows the location of the digital zero button.

Figure 5-1. Digital zero button location

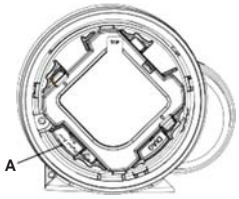

A. Digital zero button

5.3.2 Determining calibration frequency

Calibration frequency can vary greatly depending on the application, performance requirements, and process conditions. Use the following procedure to determine calibration frequency that meets the needs of your application.

1. Determine the performance required for your application.
2. Determine the operating conditions.
3. Calculate the Total Probable Error (TPE).
4. Calculate the stability per month.
5. Calculate the calibration frequency.

Sample calculation for 2051 (0.04% accuracy & 5-year stability)

Step 1: Determine the performance required for your application.

Required Performance:	0.20% of span

Step 2: Determine the operating conditions.

Transmitter:	2051CD, Range 2 [URL=250 inH_2O(623 mbar)]
Calibrated Span:	150 inH_2O (374 mbar)
Ambient Temperature Change:	±50 °F (28 °C)
Line Pressure:	500 psig (34,5 bar)

Step 3: Calculate total probable error (TPE).

$$TPE = \sqrt{(\text{Reference Accuracy})^2 + (\text{Temperature Effect})^2 + (\text{Static Pressure Effect})^2} = 0.105\% \text{ of span}$$

Where:

Reference Accuracy = ± 0.04% of span

Ambient Temperature Effect = $\left(\frac{(0.0125 \times \text{URL})}{\text{Span}} + 0.0625\right)$% per 50 °F = ±0.0833% of span

Span Static Pressure Effect[1] =

0.1% reading per 1000 psi (69 bar) = ±0.05% of span at maximum span

(1)Zero static pressure effect removed by zero trimming at line pressure.

Step 4: Calculate the stability per month.

$$\text{Stability} = \pm\left[\frac{(0.125 \times \text{URL})}{\text{Span}}\right]\% \text{ of span for 5 years} = \pm 0.0021\% \text{ of URL for 1 month}$$

Step 5: Calculate calibration frequency.

$$\text{Cal. Freq.} = \frac{(\text{Req. Performance} - \text{TPE})}{\text{Stability per Month}} = \frac{(0.2\% - 0.105\%)}{0.0021\%} = 45 \text{ months}$$

5.3.3 Compensating for Span line pressure effects (range 4 and range 5)

Rosemount 2051 Range 4 and 5 pressure transmitters require a special calibration procedure when used in differential pressure applications. The purpose of this procedure is to optimize transmitter performance by reducing the effect of static line pressure in these applications. The 2051 differential pressure transmitters (ranges 0 through 3) do not require this procedure because optimization occurs at the sensor.

The systematic span shift caused by the application of static line pressure is -0.95% of reading per 1000psi (69 bar) for Range 4 transmitters, and -1% of reading per 1000psi (69 bar) for Range 5 transmitters. Using the following procedure, the span effect can be corrected to ±0.2% of reading per 1000 psi (69 bar) for line pressures from 0 to 3626 psi (0 to 250 bar).

Use the following example to compute correct input values.

Example

A range 4 differential pressure HART transmitter (2051CD4...) will be used in an application with a static line pressure of 1200 psi (83 bar). The transmitter output is ranged with the Lower Range Value at 500 inH20 (1, 2 bar) and the Upper Range Value at 1500 inH20 (3, 7 bar). To correct for systematic error caused by high static line pressure, first use the following formulas to determine the corrected values for the high trim value.

High Trim Value:

HT = (URV - (S/100 x P/1000 x LRV))

Where:	HT =	Corrected High Trim Value
	URV =	Upper Range Value
	S =	Span shift per specification (as a percent of reading)
	P =	Static Line Pressure in psi

In this example:

URV =	1500 inH_2O (3.74 bar)
S =	-0.95%
P =	1200 psi
LT =	1500 - (-0.95%/100 x 1200 psi/1000 psi x 1500 inH_2O)
LT =	1517.1 inH_20

Complete the Upper Sensor Trim procedure as described in "Sensor Trim" on page 68. In the example above, at step 4, apply the nominal pressure value of 1500 inH_20. However, enter the calculated correct upper Sensor Trim value of 1517.1 inH_20 with a Field Communicator.

Note
The Range Values for the upper and lower range points should be at the nominal URV and LRV. In the example above, the values are 1500 inH_20 and 500 inH_20 respectively. Confirm the values on the HOME screen of the Field Communicator. Modify, if needed, by following the steps in "Set range points" on page 19.

5.4 Trim the pressure signal

5.4.1 Sensor Trim Overview

A Sensor Trim corrects the pressure offset and pressure range to match a pressure standard. The Upper Sensor Trim corrects the pressure range and the Lower Sensor Trim (Zero Trim) corrects the pressure offset. An accurate pressure standard is required for full calibration. A zero trim can be performed if the process is vented, or the high and low side pressure are equal (for differential pressure transmitters).

Zero trim is a single-point offset adjustment. It is useful for compensating for mounting position effects and is most effective when performed with the transmitter installed in its final mounting

position. Since this correction maintains the slope of the characterization curve, it should not be used in place of a sensor trim over the full sensor range.

When performing a zero trim, ensure that the equalizing valve is open and all wet legs are filled to the correct levels. Line pressure should be applied to the transmitter during a zero trim to eliminate line pressure errors. Refer to "Manifold operation" on page 50.

Note
Do not perform a zero trim on 2051 Wireless absolute pressure transmitters. Zero trim is zero based, and absolute pressure transmitters reference absolute zero. To correct mounting position effects on a 2051 Wireless absolute pressure transmitter, perform a low trim within the sensor trim function. The low trim function provides an offset correction similar to the zero trim function, but it does not require zero-based input.

Sensor trim is a two-point sensor calibration where two end-point pressures are applied, and all output is linearized between them. Always adjust the low trim value first to establish the correct offset. Adjustment of the high trim value provides a slope correction to the characterization curve based on the low trim value. The trim values allow you to optimize performance over your specified measuring range at the calibration temperature.

During a trim operation, the 2051 Wireless is placed in high power refresh mode, which provides frequent pressure measurement updates and allows the configured damping to take effect. This behavior allows for more accurate calibration of the device. When the device is in high power refresh mode, the battery power supply will be depleted more rapidly.

Figure 5-2. Sensor Trim example

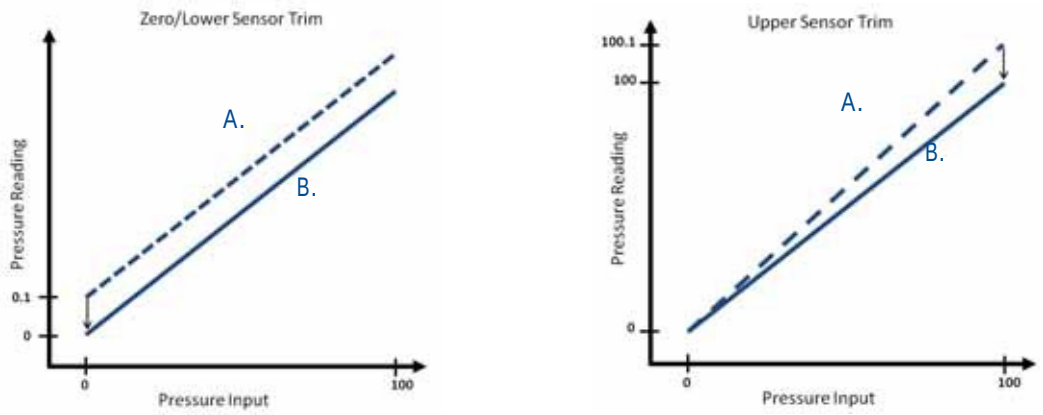

A. Before Trim
B. After Trim

5.4.2 Sensor Trim

When performing a Sensor Trim, both the upper and lower limits can be trimmed. If both upper and lower trims are to be performed, the lower trim must be done prior to the upper trim.

Note
Use a pressure input source that is at least four times more accurate than the transmitter, and allow the input pressure to stabilize for ten seconds before entering any values.

Performing a Sensor Trim with a Field Communicator

From the *Home* screen, enter the fast key sequence and follow the steps within the Field Communicator to complete the Sensor Trim.

Fast Keys	3, 5, 1

To calibrate the transmitter using the sensor trim function:

1. Assemble and power the entire calibration system including the 2051, Field Communicator / AMS, power supply, pressure input source, and readout device.
2. From the *Home* screen, select **3: Service Tools**.
3. Select **5: Maintenance**
4. Select **1: Pressure Calibration**.

Note
Select pressure points so that lower and upper values are equal to or outside the expected process operation range.

5. Follow the on-screen instructions to complete the adjustment of the lower value.
6. Repeat the procedure for the upper value. Select 1: Upper Sensor Trim and follow the on-screen instructions to complete the adjustment of the upper value.

Performing a Sensor Trim with AMS Device Manager

Right click on the device and, under the *Method* drop down menu, move cursor over *Calibrate* and, under *Sensor Trim*, select **Lower Sensor Trim**.

1. Follow the screen prompts to perform a Sensor Trim using AMS Device Manager.
2. If desired right click on the device and under the *Method* drop down menu, move cursor over *Calibrate* and under *Sensor Trim* and select **Upper Sensor Trim**

Performing a Digital Zero Trim (option DZ)

A Digital Zero Trim (option DZ) provides the same function as a zero / lower Sensor Trim, but can be completed in hazardous areas at any given time by simply pushing the Zero Trim button when the transmitter is at zero pressure. If the transmitter is not close enough to zero when the button is pushed, the command may fail due to excess correction. If ordered, a Digital Zero Trim can be performed by utilizing configuration buttons located inside the housing of the transmitter, see Figure 5-1 on page 65 for DZ button location.

1. Remove the electronics housing cover.
2. Press and hold the Digital zero button for at least two seconds then release to perform a Digital Zero Trim

5.4.3 Recall Factory Trim—Sensor Trim

The Recall Factory Trim—Sensor Trim command allows the restoration of the as-shipped factory settings of the Sensor Trim. This command can be useful for recovering from an inadvertent zero trim of an absolute pressure unit or inaccurate pressure source.

Recalling factory trim with AMS

Right click on the device and, under the *Method* drop down menu, move cursor over *Calibrate* and select **Restore Factory Calibration**.

1. Click **Next** after setting the control loop to manual.
2. Select **Sensor Trim** under *Trim to recall* and click **Next**.
3. Follow the screen prompts to recall Sensor Trim.

5.4.4 Line Pressure Effect (Range 2 and Range 3)

The following specifications show the static pressure effect for the Rosemount 2051 Range 2 and Range 3 pressure transmitters used in differential pressure applications where line pressure exceeds 2000 psi (138 bar).

Zero Effect

± 0.1% of the upper range limit plus an additional ± 0.1% of upper range limit error for each 1000 psi (69 bar) of line pressure above 2000 psi (138 bar).

Example: Line pressure is 3000 psi (207 bar) for Ultra performance transmitter. Zero effect error calculation:

± {0.05 + 0.1 x [3 kpsi - 2 kpsi]} = ± 0.15% of the upper range limit

Span Effect

Refer to "Line Pressure Effect" on page 91.

5.4.5 Compensating for Line Pressure (Range 4 and Range 5)

The Rosemount 2051 Wireless Range 4 and 5 pressure transmitters require a special calibration procedure when used in differential pressure applications. The purpose of this procedure is to optimize transmitter performance by reducing the effect of static line pressure in these applications. The 2051 Wireless differential pressure transmitters (Ranges 1, 2, and 3) do not require this procedure because optimization occurs in the sensor.

Applying high static pressure to the 2051 Wireless Range 4 and Range 5 pressure transmitters causes a systematic shift in the output. This shift is linear with static pressure; correct it by performing the "Sensor Trim" procedure on page 68.

The following specifications show the static pressure effect for the 2051 Wireless Range 4 and Range 5 transmitters used in differential pressure applications:

Zero Effect:

± 0.1% of the upper range limit per 1000 psi (69 bar) for line pressures from 0 to 2000 psi (0 to 138 bar)

For line pressures above 2000 psi (138 bar), the zero effect error is ± 0.2% of the upper range limit plus an additional ± 0.2% of upper range limit error for each 1000 psi (69 bar) of line pressure above 2000 psi (138 bar).

Example: Line pressure is 3000 psi (3 kpsi). Zero effect error calculation:

± {0.2 + 0.2 x [3 kpsi - 2 kpsi]} = ± 0.4% of the upper range limit

Span Effect:

Correctable to ±0.2% of reading per 1000 psi (69 bar) for line pressures from 0 to 3626 psi (0 to 250 bar)

The systematic span shift caused by the application of static line pressure is -1.00% of reading per 1000 psi (69 bar) for Range 4 transmitters, and -1.25% of reading per 1000 psi (69 bar) for Range 5 transmitters.

Use the following example to compute corrected input values.

Example

A transmitter with model number 2051_CD4 will be used in a differential pressure application where the static line pressure is 1200 psi (83 bar). The transmitter output is ranged with 4 mA at 500 inH_2O (1,2 bar) and 20 mA at 1500 inH_2O (3,7 bar).

To correct for systematic error caused by high static line pressure, first use the following formulas to determine corrected values for the low trim and high trim.

LT = LRV + S x (LRV) x P

Where:	LT =	Corrected Low Trim Value
	LRV =	Lower Range Value
	S =	–(Span shift per specification)
	P =	Static Line Pressure

HT = URV + S x (URV) x P

Where:	HT =	Corrected High Trim Value
	URV =	Upper Range Value
	S =	–(Span shift per specification)
	P =	Static Line Pressure

In this example:

URV =	1500 inH_2O (3.74 bar)
LRV =	500 inH_2O (1.25 bar)
P =	1200 psi (82.74 bar)
S =	± 0.01/1000

To calculate the low trim (LT) value:

LT = 500 + (0.01/1000)(500)(1200)

LT = 506 inH_2O (1.26 bar)

To calculate the high trim (HT) value:

HT = 1500 + (0.01/1000)(1500)(1200)

HT = 1518 inH_2O (3.78 bar)

Complete a 2051 Wireless sensor trim and enter the corrected values for low trim (LT) and high trim (HT), refer to "Sensor Trim" on page 68.

Enter the corrected input values for low trim and high trim through the Field Communicator keypad after you apply the nominal value of pressure as the transmitter input.

Note
After sensor trimming 2051 Wireless Range 4 and 5 transmitters for high differential pressure applications, verify that the Lower and Upper Operating points are at nominal values using the Field Communicator.

5.5 LCD Screen Messages

5.5.1 Startup Screen Sequence

The following screens will display when the Power Module is first connected to the Rosemount 2051 Wireless.

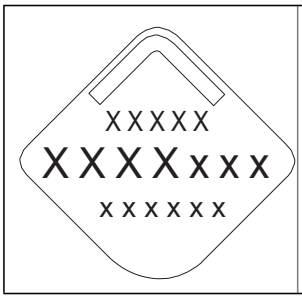	All Segments On: used to visually determine if there are any bad segments on the LCD
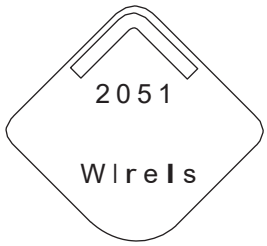	Device Identification: used to determine Device Type.
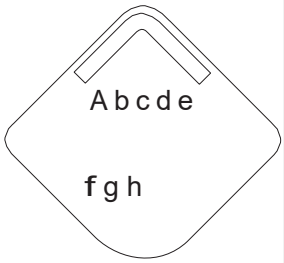	Device Information - Tag: user entered tag which is eight characters long - will not display if all characters are blank
	PV Screen - process pressure

SNSR 25.00 deg c	SV Screen - sensor temperature value
DEV 25.25 deg c	TV Screen - device temperature value
Suply 3.60 volts	QV Screen - voltage reading at the power supply terminals
PRCNT 7.21 RANGE	Percent Range Screen - percent range reading
alert presnt	Alert Screen - at least one alert is present - this screen will not display if no alerts are present

5.5.2 Diagnostic Button Screen Sequence

The following five screens will display when the device is operating properly and the Diagnostic Button has been pressed.

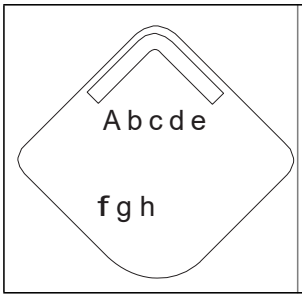

Device Information - Tag: user entered tag which is eight characters long - will not display if all characters are blank

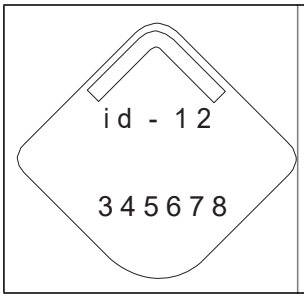

Device Identification: used to determine Device ID

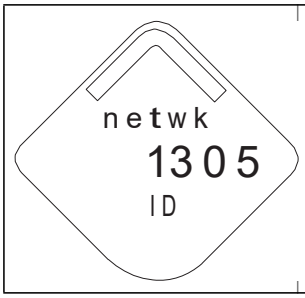

Diagnostic Button Screen 3: assuming the device has the correct join key, this ID tells the user what network the device can connect with

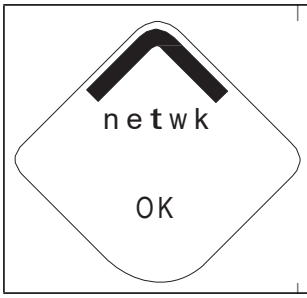

Diagnostic Button Screen 4: the device has joined a network and has been fully configured and has multiple parents

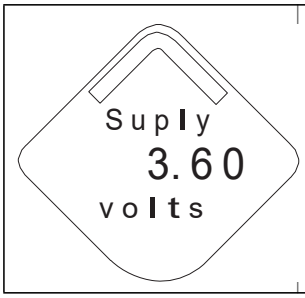

Diagnostic Button Screen 5: voltage reading at the power supply terminals

5.5.3 Network Diagnostic Status Screens

These screens display the network status of the device. Only one will be shown during the startup sequence or diagnostic sequence.

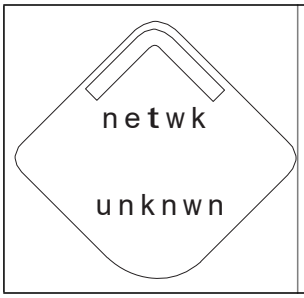

Diagnostic Button Screen 4.1: the device is attempting to start the radio

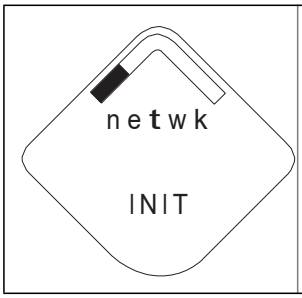

Diagnostic Button Screen 4.2: the device has just restarted

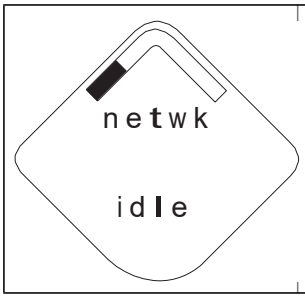

Diagnostic Button Screen 4.3: the device is starting to join the process

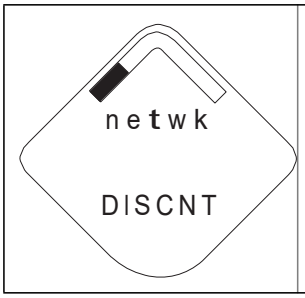

Diagnostic Button Screen 4.4: the device is in a disconnected state and requires a "Force Join" command to join the network

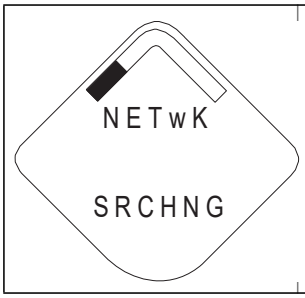

Diagnostic Button Screen 4.5: the device is searching for the Network

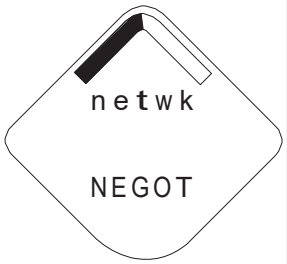

Diagnostic Button Screen 4.6: the device is attempting to join a network

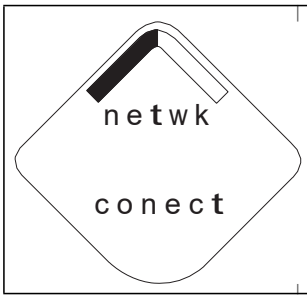

Diagnostic Button Screen 4.7: the device is connected to the Network, but is in a "Quarantined" state

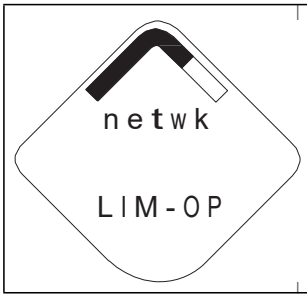

Diagnostic Button Screen 4.8: the device is joined and operational, but is running with limited bandwidth for sending periodic data

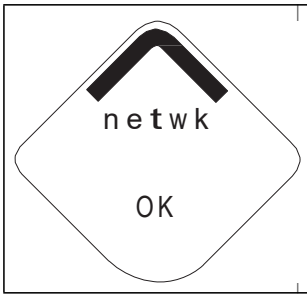	Diagnostic Button Screen 4.9: the device has joined a network and has been fully configured and has multiple parents

5.5.4 Device Diagnostic Screens

The following screens will show the device diagnostics depending on the state of the device.

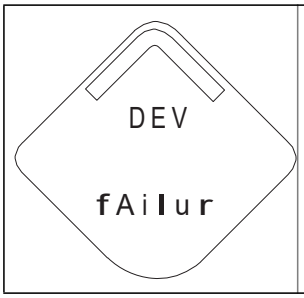	Device Information - Status: there is a critical error which may prevent the device from operating correctly. Check additional status screens for more information.
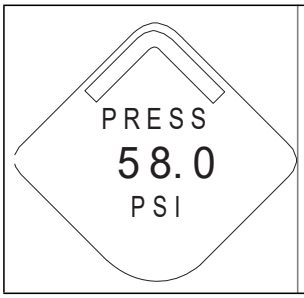	PV Screen - process pressure value
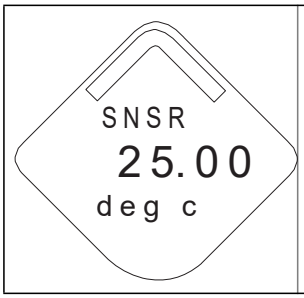	SV Screen - sensor temperature value
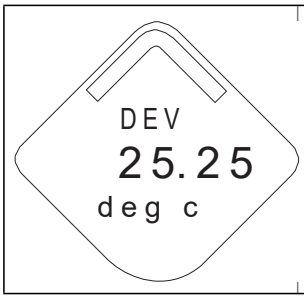	TV Screen - device temperature value

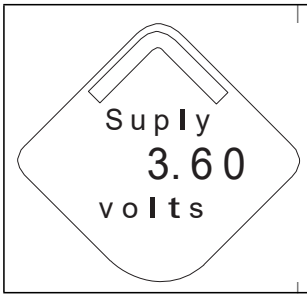

QV Screen - voltage reading at the power supply terminals

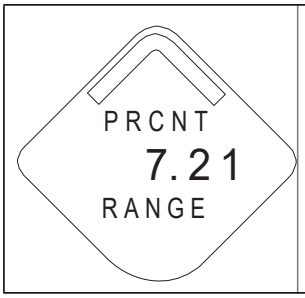

Percent Range Screen - percent range reading

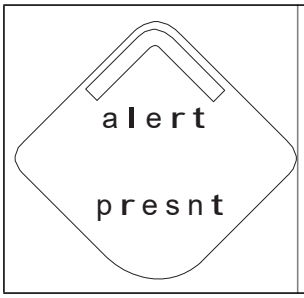

Alert Screen - at least one alert is present - this screen will not display if no alerts are present

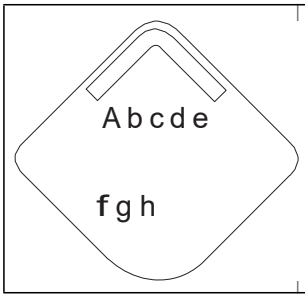

Diagnostic Button Screen 1 - Tag: user entered tag which is eight characters long - will not display if all characters are blank

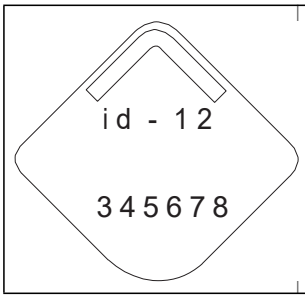

Diagnostic Button Screen 2: the device's identifier that is used to make up the HART long address - the Smart Wireless Gateway may use this to help identify devices if no unique user tag is available

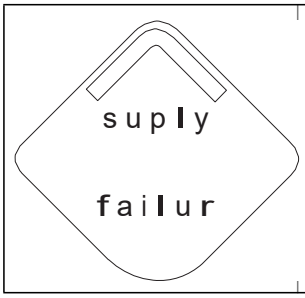

Diagnostic Button Screen 7.1: the terminal voltage has dropped below level of operating limit. Replace the Power Module (Part Number: 701PGNKF)

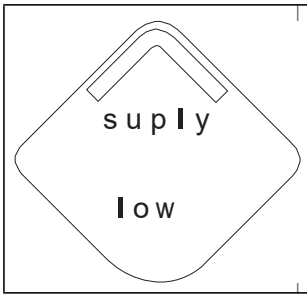

Diagnostic Button Screen 7.2: the terminal voltage is below the recommended operating range - the Power Module should be replaced

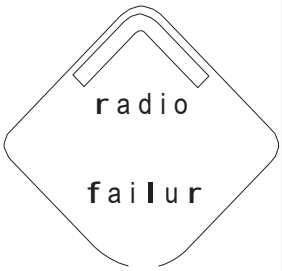

Diagnostic Button Screen 8: the device may not be able to communicate with the radio or the radio has an internal error. In this state the device may still be operational and publishing HART data

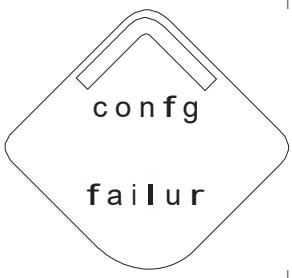

Diagnostic Button Screen 9.1: configuration of the transmitter is invalid such that critical operation of the device may be affected - check the extended configuration status to identify which configuration item(s) need to be corrected

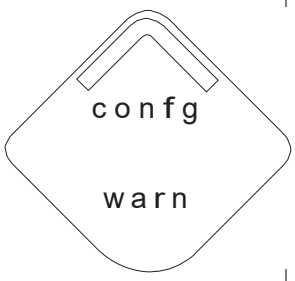	Diagnostic Button Screen 9.2: configuration of the transmitter is invalid such that non-critical operation of the device may be affected - check the extended configuration status to identify which configuration item(s) need to be corrected
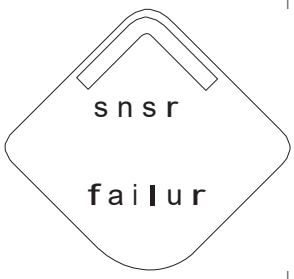	Diagnostic Button Screen 10.1: a sensor attached to the transmitter has failed, and valid readings from that sensor are no longer possible - check the sensor and sensor wiring connections - check additional status for more detailed information of the failure source
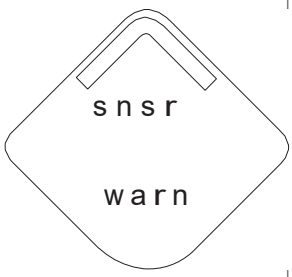	Diagnostic Button Screen 10.2: a sensor attached to the transmitter is degraded, readings from that sensor may not be within accuracy specifications - check the process, and sensor wiring connections - check additional status for more detailed information of the warning source

Note
Use the Rosemount Wireless LCD Part Number: 00753-9004-0002.

Section 6 Troubleshooting

Overview . . . . . page 83
Safety messages . . . . . page 83
Removing from service . . . . . page 88

6.1 Overview

Table 6-1, Table 6-2, and Table 6-3 provide summarized maintenance and troubleshooting suggestions for the most common operating problems for the transmitter and the wireless network connection.

6.2 Safety messages

Procedures and instructions in this section may require special precautions to ensure the safety of the personnel performing the operations. Information that raises potential safety issues is indicated by a warning symbol (⚠. Refer to the following safety messages before performing an operation preceded by this symbol.

6.2.1 Warnings (⚠)

⚠ WARNING

Explosions could result in death or serious injury:

Installation of this transmitter in an explosive environment must be in accordance with the appropriate local, national, and international standards, codes, and practices. Please review the approvals section of the 2051 reference manual for any restrictions associated with a safe installation.

- Before connecting a HART-based communicator in an explosive atmosphere, make sure the instruments in the loop are installed in accordance with intrinsically safe or non-incendive field wiring practices.

This device complies with Part 15 of the FCC Rules. Operation is subject to the following conditions.

This device may not cause harmful interference. This device must accept any interference received, including interference that may cause undesired operation.

This device must be installed to ensure a minimum antenna separation distance of 8 in. (20 cm) from all persons.

Process leaks may cause harm or result in death.

- To avoid process leaks, only use the o-ring designed to seal with the corresponding flange adapter.

Electrical shock can result in death or serious injury.

- Avoid contact with the leads and the terminals. High voltage that may be present on leads can cause electrical shock.

Table 6-1. Rosemount 2051 Wireless Device Status Information

Device Status	Description	Recommended Action
Electronics Failure	An electronics error that could impact the device measurement reading has occurred.	1. Reset the device 2. Reconfirm all configuration items in the device 3. If the condition persists, replace the electronics
Radio Failure	The wireless radio has detected a failure or stopped communicating.	1. Reset the device 2. If the condition persists, replace the electronics
Supply Voltage Failure	The supply voltage is too low for the device to function properly.	1. Replace the Power Module
Electronics Warning	The device has detected an electronics error that does not currently impact the device measurement reading.	1. Reset the device 2. Reconfirm all configuration items in the device 3. If the condition persists, replace the electronics

Device Status	Description	Recommended Action
Pressure has Exceeded Limits	The sensor has exceeded the maximum measurement range.	1. Check process for possible saturation condition 2. Verify that the appropriate sensor was chosen for the application 3. Reconfirm sensor configuration 4. Reset the device 5. Replace the sensor
Electronics Temperature has Exceeded Limits	The electronics temperature has exceeded the transmitter's maximum range.	1. Verify environmental temperature is within the transmitter's range 2. Remote mount the transmitter away from process and environmental conditions 3. Reset the device 4. If the condition persists, replace the electronics
Supply Voltage Low	The supply voltage is low and may soon affect broadcast updates.	1. Replace the Power Module
Database Memory Warning	The device has failed to write to the database memory. Any data written during this time may have been lost.	1. Reset the device 2. Reconfirm all configuration items in the device 3. If logging dynamic data not needed, this advisory can be safely ignored 4. If the condition persists, replace the electronics
Configuration Error	The device has detected a configuration error based on a change to the device.	1. Click on details for more information 2. Correct the parameter that has a configuration error 3. Reset the device 4. If the condition persists, replace the electronics
HI HI Alarm	The primary variable has surpassed the user defined limit.	1. Verify that the process variable is within user specified limits 2. Reconfirm the user defined alarm limit 3. If not needed, disable this alert
HI Alarm	The primary variable has surpassed the user defined limit.	1. Verify that the process variable is within user specified limits 2. Reconfirm the user defined alarm limit 3. If not needed, disable this alert

Device Status	Description	Recommended Action
LO Alarm	The primary variable has surpassed the user defined limit.	1. Verify that the process variable is within user specified limits 2. Reconfirm the user defined alarm limit 3. If not needed, disable this alert
LO LO Alarm	The primary variable has surpassed the user defined limit.	1. Verify that the process variable is within user specified limits 2. Reconfirm the user defined alarm limit 3. If not needed, disable this alert
Button Stuck	A buttons on the Electronics Board is detected as stuck in the active position.	1. Check the buttons for obstructions 2. Reset the device 3. If the condition persists, replace the electronics
Simulation Active	The device is in simulation mode and may not be reporting actual information.	1. Verify that simulation is no longer required 2. Disable Simulation mode in Service Tools 3. Reset the device

Table 6-2. Rosemount 2051 Wireless Troubleshooting

Symptom	Recommended Actions
Transmitter will not respond to changes in applied pressure	Check test equipment
	Check impulse piping or manifold for blockage
	Verify applied pressure is within sensor limits
Digital Pressure Variable reading is low or high	Check test equipment (verify accuracy)
	Check impulse piping for blockage or low fill in wet leg
	Verify transmitter is calibrated properly
	Verify pressure calculations for application
Digital Pressure Variable reading is erratic	Check application for faulty equipment in pressure line
	Verify transmitter is not reacting directly to equipment turning on/off
LCD display is not functioning	Reseat the LCD according to "Installing the LCD display" on page 46
	Verify that the LCD display is a wireless LCD Meter. An LCD from a wired device will not function in a wireless device. Rosemount part number: 00753-9004-0002 Verify that the LCD display mode is not disabled.

Table 6-3. Wireless Network Troubleshooting

Symptom	Recommended Actions
Device not joining the network	Verify network ID and join key
	Wait longer (30 min.)
	Enable High Speed Operation (Active Advertising) on Smart Wireless Gateway
	Check Power Module
	Verify device is within range of at least one other device
	Verify network is in active network advertise
	Power Cycle device to try again
	Verify device is configured to join. Send the "Force Join" command to the device
	See troubleshooting section of Smart Wireless Gateway for more information
Short battery life	Check that "Power Always On" mode is off
	Verify device is not installed in extreme temperatures
	Verify that device is not a network pinch point
	Check for excessive network rejoins due to poor connectivity
Limited Bandwidth Error	Reduce the Update Rate on transmitter
	Increase communication paths by adding more wireless points
	Check that device has been online for at least an hour
	Check that device is not routing through a "limited" routing node
	Create a new network with an additional Smart Wireless Gateway

6.3 Removing from service

Follow these steps:

1. Follow all plant safety rules and procedures.
2. Isolate and vent the process from the transmitter before removing the transmitter from service.
3. Remove the transmitter from the process connection.
   a. The Rosemount 2051C Wireless transmitter is attached to the process connection by four bolts and two cap screws. Remove the bolts and screws and separate the transmitter from the process connection. Leave the process connection in place and ready for re-installation. Reference Figure 3-8 on page 39 for coplanar flange.
   b. The Rosemount 2051T Wireless transmitter is attached to the process by a single hex nut process connection. Loosen the hex nut to separate the transmitter from the process. Do not wrench on neck of transmitter. See warning in "Inline process connection' on page 45.
4. Do not scratch, puncture, or depress the isolating diaphragms.
5. Clean isolating diaphragms with a soft rag and a mild cleaning solution, and rinse with clear water.
6. Whenever you remove the process flange or flange adapters, visually inspect the PTFE o-rings. Replace the o-rings if they show any signs of damage, such as nicks or cuts. Undamaged o-rings may be reused.

Appendix A Specifications and Reference Data

Performance Specifications . . . . . page 89
Functional Specifications . . . . . page 92
Physical specifications . . . . . page 97
Dimensional Drawings . . . . . page 101
Ordering Information . . . . . page 103

A.1 Performance Specifications

For zero-based spans, reference conditions, silicone oil fill, glass-filled PTFE o-rings, SST materials, *Coplanar* flange (2051C) or
1/2 in.-14 NPT (2051T) process connections, digital trim values set to equal range points.

A.1.1 Conformance to specification (±3σ (Sigma))

Technology leadership, advanced manufacturing techniques and statistical process control ensure specification conformance to ±3σ or better.

A.1.2 Digital output

For wireless devices, use calibrated range in place of span.

Reference Accuracy[1]

Models[1]	Standard	High Accuracy Option
2051CD, 2051CG Range 0 (CD)	±0.10% of span For spans less than 2:1, accuracy = ±0.05% of URL	
Range 1	±0.10% of span For spans less than 15:1, accuracy = $\pm\left[0.025 + 0.005\left(\frac{URL}{Span}\right)\right]$% of Span	
Ranges 2-5	±0.065% of span For spans less than 10:1, accuracy = $\pm\left[0.015 + 0.005\left(\frac{URL}{Span}\right)\right]$% of Span	Ranges 2-4 High Accuracy Option, P8 ±0.04% of span For spans less than 5:1, accuracy = $\pm\left[0.015 + 0.005\left(\frac{URL}{Span}\right)\right]$% of Span
2051T Ranges 1-4	±0.065% of span For spans less than 10:1, accuracy = $\pm\left[0.0075\left(\frac{URL}{Span}\right)\right]$% of Span	Ranges 1-4 High Accuracy Option, P8 ±0.04% of span For spans less than 5:1, accuracy = $\pm\left[0.0075\left(\frac{URL}{Span}\right)\right]$% of Span
Range 5	±0.075% of span	
2051CA Ranges 1-4	±0.065% of span For spans less than 10:1, accuracy = $\pm\left[0.0075\left(\frac{URL}{Span}\right)\right]$% of Span	Ranges 2-4 High Accuracy Option, P8 ±0.04% of span For spans less than 5:1, accuracy = $\pm\left[0.0075\left(\frac{URL}{Span}\right)\right]$% of Span
2051H/2051L All Ranges	±0.075% of span For spans less than 10:1, accuracy = $\pm\left[0.025 + 0.005\left(\frac{URL}{Span}\right)\right]$% of Span	

(1) Total performance is determined by performing a root sum square calculation on reference accuracy, ambient temperature effect, and line pressure effect errors. For FOUNDATION fieldbus transmitters, use calibrated range in place of span. For zero based spans, reference conditions, silicone oil fill, SST materials, Coplanar flange (2051C) or 1/2 in. - 18 NPT (2051T) process connections, digital trim values set to equal range points.

Total Performance

For ±50 °F (28 °C) temperature changes, up to 1000 psi (6,9 MPa) line pressure (CD only), from 1:1 to 5:1 rangedown.

Models	Total Performance
2051C Ranges 2-5	±0.15% of span
2051T Ranges 1-4	±0.15% of span

Long Term Stability

Models	Long Term Stability
2051C Ranges 2-5	±0.125% of URL for 5 years ±50 °F (28 °C) temperature changes, and up to 1000 psi (6,9 MPa) line pressure.
2051CD Low/Draft Range Ranges 0-1	±0.2% of URL for 1 year
2051T Ranges 1-4	±0.125% of URL for 5 years ±50 °F (28 °C) temperature changes, and up to 1000 psi (6,9 MPa) line pressure.

Dynamic Performance

	4 - 20 mA (*HART* protocol)(1)	Fieldbus protocol(3)	Typical HART Transmitter Response Time
Total Response Time ($T_d + T_c$)(2):			
2051C, Ranges 2-5: Range 1: Range 0: 2051T: 2051H/L:	100 ms 255 ms 700 ms 100 ms Consult factory	152 ms 307 ms 752 ms 152 ms Consult factory	
Dead Time (Td)	45 ms (nominal)	97 ms	
Update Rate	22 times per second	22 times per second	

(1) Dead time and update rate apply to all models and ranges; analog output only
(2) Nominal total response time at 75 °F (24 °C) reference conditions.
(3) Transmitter fieldbus output only, segment macro-cycle not included.

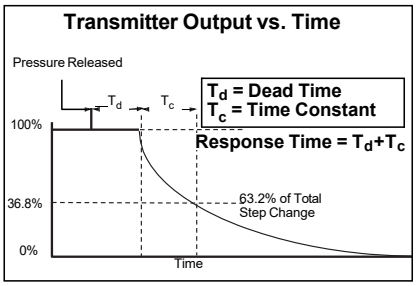

Line Pressure Effect per 1000 psi (6,9 MPa)(1)

Models(1)	Line Pressure Effect
2051CD Range 0	Zero Error(2) ±0.125% of URL/100 psi (6,89 bar)
Range 1	±0.25% of URL/1000 psi (68,9 bar)
Ranges 2-3	±0.05% of URL/1000 psi (68,9 bar) for line pressures from 0 to 2000 psi (0 to 13,7 MPa)
Range 0	Span Error ±0.15% of reading/100 psi (6,89 bar)
Range 1	±0.4% of reading/1000 psi (68,9 bar)
Ranges 2-3	±0.1% of reading/1000 psi (68,9 bar)
2051HD All Ranges	Zero Error(1) ±0.1% of URL/1000 psi (68,9 bar) for line pressures from 0 to 2000 psi (0 to 13,7 MPa)
All Ranges	Span Error ±0.1% of reading/1000 psi (68,9 bar)

(1) For zero error specifications for line pressures above 2000 psi (137,9 bar) or line pressure effect specifications for DP Ranges 4-5, see "Compensating for Line Pressure (Range 4 and Range 5)" on page 70.
(2) Can be calibrated out at line pressure.

Ambient Temperature Effect per 50°F (28°C)

Models	Ambient Temperature Effect
2051CD/CG Range 0	±(0.25% URL + 0.05% span)
Range 1	±(0.1% URL + 0.25% span)
Ranges 2-5	±(0.0125% URL + 0.0625% span) from 1:1 to 5:1 ±(0.025% URL + 0.125% span) from 5:1 to 100:1
2051T Range 1	±(0.025% URL + 0.125% span) from 1:1 to 10:1 ±(0.05% URL + 0.125% span) from 10:1 to 100:1
Range 2-4	±(0.025% URL + 0.125% span) from 1:1 to 30:1 ±(0.035% URL + 0.125% span) from 30:1 to 100:1
Range 5	±(0.1% URL + 0.15% span)
2051CA All Ranges	±(0.025% URL + 0.125% span) from 1:1 to 30:1
	±(0.035% URL + 0.125% span) from 30:1 to 100:1
2051L	See Rosemount Inc. Instrument Toolkit® software.

Mounting Position Effects

Models	Mounting Position Effects
2051C	Zero shifts up to ±1.25 inH_2O (3,11 mbar), which can be calibrated out. No span effect.
2051L	With liquid level diaphragm in vertical plane, zero shift of up to 1 inH_2O (2,49 mbar). With diaphragm in horizontal plane, zero shift of up to 5 inH_2O (12,43 mbar) plus extension length on extended units. All zero shifts can be calibrated out. No span effect.
2051T/CA	Zero shifts up to 2.5 inH_2O (6,22 mbar), which can be calibrated out. No span effect.

Vibration Effect

Less than ±0.1% of URL when tested per the requirements of IEC60770-1 field or pipeline with high vibration level (10-60 Hz 0.21mm displacement peak amplitude / 60-2000 Hz 3g).

Electromagnetic Compatibility (EMC)

Meets all relevant requirements of EN 61326 and NAMUR NE-21[(1)].

A.2 Functional Specifications

A.2.1 Service

Liquid, gas, and vapor applications

(1) NAMUR NE-21 does not apply to Wireless

A.2.2 Range and Sensor Limits

Table A-1. 2051CD, 2051CG, 2051L, and 2051H Range and Sensor Limits

Range	Minimum Span		Range and Sensor Limits				
			Lower (LRL)				
	2051CD[1], CG, L, H	Upper (URL)	2051C Differential	2051C/ Gage	2051L Differential	2051L Gage	2051H Differential
0	0.1 inH_2O (0,25 mbar)	3.0 inH_2O (7,47 mbar)	–3.0 inH_2O (-7,47 mbar)	NA	NA	NA	NA
1	0.5 inH_2O (1,2 mbar)	25 inH_2O (62,3 mbar)	–25 inH_2O (–62,1 mbar)	–25 inH_2O (–62,1 mbar)	NA	NA	NA
2	2.5 inH_2O (6,2 mbar)	250 inH_2O (0,62 bar)	–250 inH_2O (–0,62 bar)	–250 inH_2O (–0,62 bar)	–250 inH_2O (–0,62 bar)	–250 inH_2O (–0,62 bar)	–250 inH_2O (–0,62 bar)
3	10 inH_2O (24,9 mbar)	1000 inH_2O (2,49 bar)	–1000 inH_2O (–2,49 bar)	0.5 psia (34,5 mbar abs)	–1000 inH_2O (–2,49 bar)	0.5 psia (34,5 mbar abs)	–1000 inH_2O (–2,49 bar)
4	3 psi (0,20 bar)	300 psi (20,6 bar)	–300 psi (–20,6 bar)	0.5 psia (34,5 mbar abs)	–300 psi (–20,6 bar)	0.5 psia (34,5 mbar abs)	–300 psi (–20,6 bar)
5	20 psi (1,38 bar)	2000 psi (137,9 bar)	–2000 psi (–137,9 bar)	0.5 psia (34,5 mbar abs)	NA	NA	–2000 psi (–137,9 bar)

(1) Range 0 only available with 2051CD. Range 1 only available with 2051CD or 2051CG.

Zero and Span Adjustment Requirements

Zero and span values can be set anywhere within the range limits stated in Table A-1.

Span must be greater than or equal to the minimum span stated in Table A-1.

A.3 Wireless Self-Organizing Networks

Output

IEC 62591 (WirelessHART) 2.4 GHz DSSS

Wireless Radio (Internal Antenna, WP Option)

- Frequency: 2.4 - 2.4835 GHz
- Channels: 15
- Modulation: IEEE 802.15.4 compliant DSSS
- Transmission: Maximum of 10 dBm EIRP

Local Display

The optional 3-line, 7-digit LCD can display user-selectable information such as primary variable in engineering units, scaled variable, percent of range, sensor module temperature, and electronics temperature. The display updates based on the wireless update rate.

Digital Zero trim

Digital Zero trim (option DZ) is an offset adjustment to compensate for mounting position effects, up to 5% of URL.

Update rate

User selectable, 1 second to 60 minutes.

Wireless sensor module for in-line transmitters

The 2051 wireless transmitter requires the engineered polymer housing to be selected. The standard sensor module will come with aluminum material. If stainless steel is required, the option WSM must be selected.

Wireless power module

Field replaceable, keyed connection eliminates the risk of incorrect installation. Intrinsically Safe Lithium-thionyl chloride Power Module (Green Power Module, model number 701PGNKF) with PBT/PC enclosure. Ten-year life at one minute update rate.[1]

(1) Reference conditions are 70 °F (21 °C), and routing data for three additional network devices.
NOTE: Continuous exposure to ambient temperature limits of
-40 °F or 185 °F (-40 °C or 85 °C) may reduce specified life by less than 20 percent.

A.3.1 Overpressure limits

Rosemount 2051CD/CG

- Range 0: 750 psi (51,7 bar)
- Range 1: 2000 psig (137,9 bar)
- Ranges 2–5: 3626 psig (250 bar)
  4500 psig (310,3 bar) for option code P9

Rosemount 2051CA

- Range 1: 750 psia (51,7 bar)
- Range 2: 1500 psia (103,4 bar)
- Range 3: 1600 psia (110,3 bar)
- Range 4: 6000 psia (413,7 bar)

Rosemount 2051TG/TA

- Range 1: 750 psi (51,7 bar)
- Range 2: 1500 psi (103,4 bar)
- Range 3: 1600 psi (110,3 bar)
- Range 4: 6000 psi (413,7 bar)
- Range 5: 15000 psi (1034,2 bar)

Rosemount 2051L

Limit is flange rating or sensor rating, whichever is lower (see the table below).

Standard	Type	CS Rating	SST Rating
ANSI/ASME	Class 150	285 psig	275 psig
ANSI/ASME	Class 300	740 psig	720 psig
ANSI/ASME	Class 600	1480 psig	1440 psig
At 100 °F (38 °C), the rating decreases with increasing temperature, per ANSI/ASME B16.5.			
DIN	PN 10–40	40 bar	40 bar
DIN	PN 10/16	16 bar	16 bar
DIN	PN 25/40	40 bar	40 bar
At 248 °F (120 °C), the rating decreases with increasing temperature, per DIN 2401.			

A.3.2 Static pressure limit

Rosemount 2051CD Only

Operates within specifications between static line pressures of 0.5 psia and 3626 psig (4500 psig (310, 3 bar) for
Option Code P9).

Range 0: 0.5 psia and 750 psig (3, 4 bar and 51, 7 bar)

Range 1: 0.5 psia and 2000 psig (3, 4 bar and 137, 9 bar)

A.3.3 Burst pressure limits

Coplanar or traditional process flange

- 10000 psig (689,5 bar).

Rosemount 2051T

- Ranges 1–4: 11000 psi (758,4 bar)
- Range 5: 26000 psig (1792,64 bar)

A.3.4 Temperature limits

Ambient

–40 to 185 °F (–40 to 85 °C)
With LCD display[1]: –40 to 175 °F (–40 to 80 °C)

(1) LCD display may not be readable and LCD updates will be slower at temperatures below -4 °F (-20 °C).

Storage

–40 to 185 °F (–40 to 85 °C)

With LCD display: –40 to 185 °F (–40 to 85 °C)

Process Temperature Limits

At atmospheric pressures and above.

2051C Coplanar	
Silicone Fill Sensor[1]	
with Coplanar Flange	–40 to 250 °F (–40 to 121 °C)[2]
with Traditional Flange	–40 to 300 °F (–40 to 149 °C)[2][3]
with Level Flange	–40 to 300 °F (–40 to 149 °C)[2]
with 305 Integral Manifold	–40 to 300 °F (–40 to 149 °C)[2][3]
Inert Fill Sensor[1]	-40 to 185 °F (–40 to 85 °C)[4][5]
2051T In-Line (Process Fill Fluid)	
Silicone Fill Sensor[1]	–40 to 250 °F (–40 to 121 °C)[2]
Inert Fill Sensor[1]	–22 to 250 °F (–30 to 121 °C)[2]
2051L Low-Side Temperature Limits	
Silicone Fill Sensor[1]	–40 to 250 °F (–40 to 121 °C)[2]
Inert Fill Sensor[1]	–40 to 185 °F (–40 to 85 °C)[2]
2051L High-Side Temperature Limits (Process Fill Fluid)	
Syltherm® XLT	–102 to 293 °F (–75 to 145 °C)
D. C.® Silicone 704[6]	32 to 401 °F (0 to 205 °C)
D. C. Silicone 200	–49 to 401 °F (–45 to 205 °C)
Inert (Halocarbon)	–49 to 320 °F (–45 to 160 °C)
Glycerin and Water	5 to 203 °F (–15 to 95 °C)
Neobee M-20®	5 to 401 °F (–15 to 205 °C)
Propylene Glycol and Water	5 to 203 °F (–15 to 95 °C)

(1) Process temperatures above 185 °F (85 °C) require derating the ambient limits by a 1.5:1 ratio.
(2) 220 °F (104 °C) limit in vacuum service; 130 °F (54 °C) for pressures below 0.5 psia.
(3) -20 °F (-29 °C) is the lower process temperature limit with option code P0.
(4) 160 °F (71 °C) limit in vacuum service.
(5) Not available for 2051_CA.
(6) Upper limit of 600 °F (315 °C) is available with 1199 seal assemblies mounted away from the transmitter with the use of capillaries and up to 500 °F (260 °C) with direct mount extension.

A.3.5 Humidity Limits

0–100% relative humidity

A.3.6 Volumetric Displacement

Less than 0.005 in^3 (0,08 cm^3)

A.3.7 Damping

The Damping command introduces a delay in processing which increases the response time of the transmitter; smoothing variations in output readings caused by rapid input changes. In the 2051 Wireless pressure transmitter, damping only takes effect when the device is placed in high power refresh mode and during calibration. In normal power mode, the effective damping is 0. Note that when the device is in high power refresh mode, battery power will be depleted rapidly.

A.4 Physical specifications

A.4.1 Electrical connections

HART interface connections fixed to the Power Module.

A.4.2 Process connections

Rosemount 2051C

1/4–18 NPT on 2 1/8-in. centers

1/2–14 NPT on 2-in. (50.8 mm), 2 1/8-in. (54.0 mm), or 2 1/4-in. (57.2 mm) centers

Rosemount 2051T

1/2–14 NPT female,
G 1/2 A DIN 16288 Male (available in SST for Range 1–4 transmitters only)

Rosemount 2051L

High pressure side: 2-in. (50.8mm), 3-in. (72 mm), or 4-in. (102mm), ASME B 16.5 (ANSI) Class 150, 300 or 600 flange; 50, 80 or 100 mm, DIN 2501 PN 40 or 10/16 flange

Low pressure side: 1/4–18 NPT on flange, 1/2–14 NPT on process adapter

Rosemount 2051CF

For Rosemount 2051CFA, see 00813-0100-4485 Rosemount 485 Annubar
For Rosemount 2051CFC, see 00813-0100-4485 Rosemount 405 Compact Orifice Plate
For Rosemount 2051CFP, see 00813-0100-4485 Rosemount 1195 Integral Orifice

A.4.3 Process-Wetted parts

Process isolating diaphragms

Isolating Diaphragm Material	2051CD/CG	2051T	2051CA	2051H
316L SST	•	•	•	•
Alloy C-276	•	•	•	•

Drain/vent valves

316 SST, Alloy C-276, or Alloy 400/K-500 material
(Alloy 400/K-500 is not available with 2051L).

Process flanges and adapters

Plated carbon steel
SST: CF-8M (Cast 316 SST) per ASTM A743
Cast C-276: CW-12MW per ASTM A494
Cast Alloy 400: M-30C per ASTM A494

Wetted O-rings

Glass-filled PTFE
(Graphite-filled PTFE with Isolating Diaphragm code 6)

A.4.4 Rosemount 2051L Process Wetted Parts

Flanged Process Connection (Transmitter High Side)

Process diaphragms, including process gasket surface

316L SST, Alloy C-276, or Tantalum

Extension

CF-3M (Cast 316L SST, material per ASTM A743), or CW-12MW (Cast C-276, material ASTM A494); fits schedule 40 and 80 pipe

Mounting flange

Zinc-cobalt plated CS or 316 SST

Reference Process Connection (Transmitter Low Side)

Isolating Diaphragms

316L SST or Alloy C-276

Reference Flange and Adapter

CF-8M (Cast version of 316 SST, material per ASTM-A743)

A.4.5 Non-Wetted Parts

Electronics housing

PBT/PC with NEMA 4X and IP66/67

Sensor module housing

Coplanar: CF-3M (Cast version of 316L SST)

Inline: Aluminum module painted with polyurethane or CF-3M (Cast version of 316L SST, material per ASTM-A743)

Bolts

Plated carbon steel per ASTM A449, Type 1
Austenitic 316 SST per ASTM F593
ASTM A453, Class D, Grade 660 SST
ASTM A193, Grade B7M alloy steel
ASTM A193, Class 2, Grade B8M SST
Alloy K-500

Sensor Module Fill Fluid

Silicone

Process Fill Fluid (Liquid Level Only)

2051L: *Syltherm* XLT, *D.C.* Silicone 704,
D.C. Silicone 200, inert, glycerin and water,
Neobee M-20, propylene glycol and water.

Cover O-rings

Silicone

Power module

Field replaceable, keyed connection eliminates the risk of incorrect installation, Intrinsically Safe Lithium-thionyl chloride Power Module (Green Power Module, model number 701PGNKF) with PBT enclosure

A.4.6 Shipping Weights for 2051 Wireless Pressure Transmitter

Table A-2. Transmitter weights without options

Complete Transmitter[1]	Weight In lb (kg)
2051C with engineered polymer housing	3.90 (1,8)
2051T with engineered polymer housing	1.9 (0,86)

(1) Transmitter weights include the sensor module and housing only.

Table A-3. 2051L weights without options

Flange	Flush lb. (kg)	2-in. Ext. lb (kg)	4-in. Ext. lb (kg)	6-in. Ext. lb (kg)
2-in., 150	6.1 (2,8)	—	—	—
3-in., 150	12.3 (5,6)	13.0 (5,9)	14.2 (6,4)	15.5 (7,0)
4-in., 150	17.8 (8,1)	17.5 (7,9)	18.7 (8,4)	20.0 (9,1)
2-in., 300	7.9 (3,6)	—	—	—
3-in., 300	16.2 (7,3)	16.9 (7,7)	18.1 (8,2)	19.4 (8,8)
4-in., 300	27 (12,2)	26.9 (12,2)	28.1 (12,7)	29.4 (13,3)
2-in., 600	9.4 (4,3)	—	—	—
3-in., 600	18.7 (8,5)	19.4 (8,8)	20.6 (9,3)	21.9 (9,9)
DN 50 / PN 40	7.9 (3,6)	—	—	—
DN 80 / PN 40	12.6 (5,7)	13.3 (6,0)	14.5 (6,6)	15.8 (7,2)
DN 100 / PN 10/16	7.8 (3,5)	8.5 (3,9)	9.7 (4,4)	11.0 (5,0)
DN 100 / PN 40	9.2 (4,2)	9.9 (4,5)	11.1 (5,0)	12.4 (5,6)

Table A-4. Transmitter option weights

Code	Option	Add lb. (kg)
M5	LCD Display	0.1 (0,04)
B4	SST Mounting Bracket for Coplanar Flange	1.0 (0,5)
B1, B2, B3	Mounting Bracket for Traditional Flange	2.3 (1,0)
B7, B8, B9	Mounting Bracket for Traditional Flange	2.3 (1,0)
BA, BC	SST Bracket for Traditional Flange	2.3 (1,0)
H2	Traditional Flange	2.4 (1,1)
H3	Traditional Flange	2.7 (1,2)
H4	Traditional Flange	2.6 (1,2)
H7	Traditional Flange	2.5 (1,1)
FC	Level Flange—3 in., 150	10.8 (4,9)
FD	Level Flange—3 in., 300	14.3 (6,5)
FA	Level Flange—2 in., 150	10.7 (4,8)
FB	Level Flange—2 in., 300	14.0 (6,3)
FP	DIN Level Flange, SST, DN 50, PN 40	8.3 (3,8)
FQ	DIN Level Flange, SST, DN 80, PN 40	13.7 (6,2)
WSM	SST sensor module	1.0 (0,45)
	Coplanar Flange	1.91 (0,87)
	Power Module (701PGNKF)	0.4 (0,18)

A.5 Dimensional Drawings

Dimensions are in inches (millimeters).
Process adapters (option D2) and Rosemount 305 integral manifolds must be ordered with the transmitter.

2051 Wireless Housing with In-Line and Coplanar SuperModule Platform

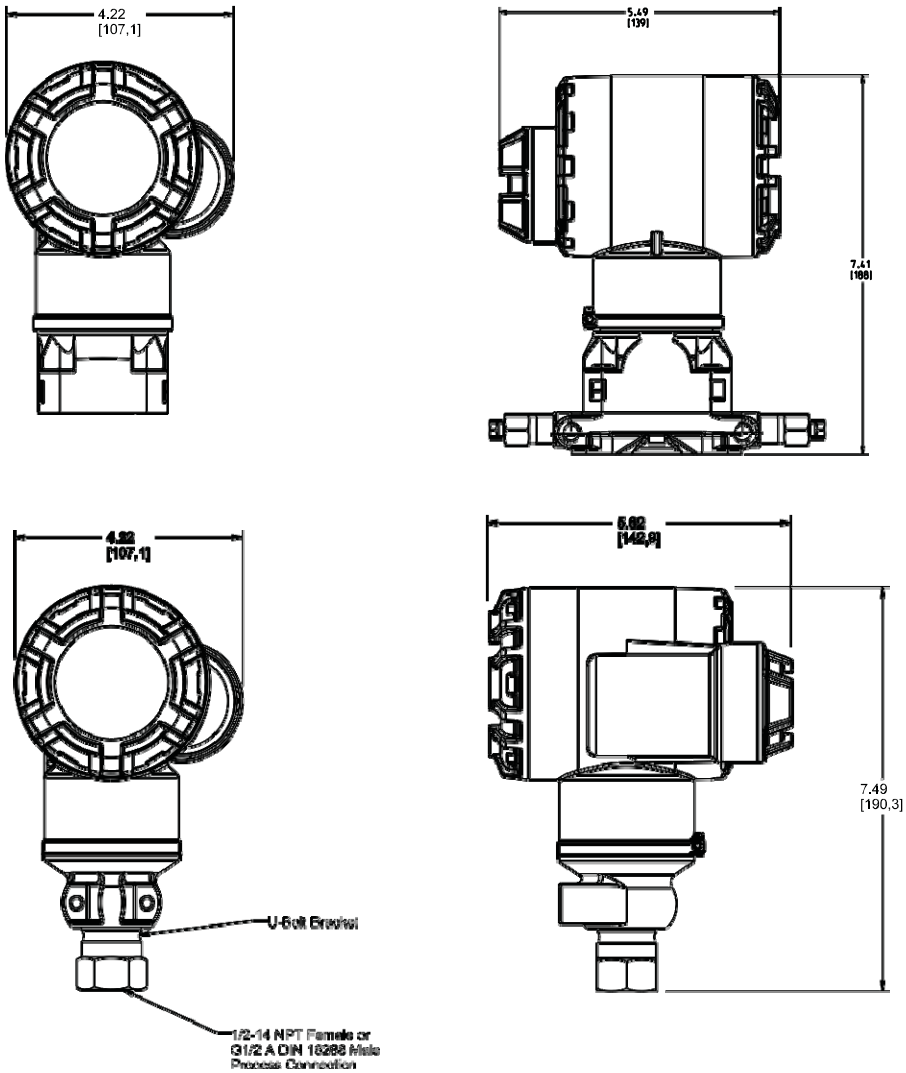

Table A-5. 2051L Dimensional Specifications

Except where indicated, dimensions are in inches (millimeters).

Class	Pipe Size	Flange Thickness A	Bolt Circle Diameter B	Outside Diameter C	No. of Bolts	Bolt Hole Diameter	Extension Diameter[1] D	O.D. Gasket Surface E
ASME B16.5 (ANSI) 150	2 (51)	0.69 (18)	4.75 (121)	6.0 (152)	4	0.75 (19)	NA	3.6 (92)
	3 (76)	0.88 (22)	6.0 (152)	7.5 (191)	4	0.75 (19)	2.58 (66)	5.0 (127)
	4 (102)	0.88 (22)	7.5 (191)	9.0 (229)	8	0.75 (19)	3.5 (89)	6.2 (158)
ASME B16.5 (ANSI) 300	2 (51)	0.82 (21)	5.0 (127)	6.5 (165)	8	0.75 (19)	NA	3.6 (92)
	3 (76)	1.06 (27)	6.62 (168)	8.25 (210)	8	0.88 (22)	2.58 (66)	5.0 (127)
	4 (102)	1.19 (30)	7.88 (200)	10.0 (254)	8	0.88 (22)	3.5 (89)	6.2 (158)
ASME B16.5 (ANSI) 600	2 (51)	1.00 (25)	5.0 (127)	6.5 (165)	8	0.75 (19)	NA	3.6 (92)
	3 (76)	1.25 (32)	6.62 (168)	8.25 (210)	8	0.88 (22)	2.58 (66)	5.0 (127)
DIN 2501 PN 10–40	DN 50	20 mm	125 mm	165 mm	4	18 mm	NA	4.0 (102)
DIN 2501 PN 25/40	DN 80	24 mm	160 mm	200 mm	8	18 mm	65 mm	5.4 (138)
	DN 100	24 mm	190 mm	235 mm	8	22 mm	89 mm	6.2 (158)
DIN 2501 PN 10/16	DN 100	20 mm	180 mm	220 mm	8	18 mm	89 mm	6.2 (158)

Class	Pipe Size	Process Side F	Lower Housing G		H
			1/4 NPT	1/2 NPT	
ASME B16.5 (ANSI) 150	2 (51)	2.12 (54)	0.97 (25)	1.31 (33)	6.66 (169)
	3 (76)	3.6 (91)	0.97 (25)	1.31 (33)	6.66 (169)
	4 (102)	3.6 (91)	0.97 (25)	1.31 (33)	6.66 (169)
ASME B16.5 (ANSI) 300	2 (51)	2.12 (54)	0.97 (25)	1.31 (33)	6.66 (169)
	3 (76)	3.6 (91)	0.97 (25)	1.31 (33)	6.66 (169)
	4 (102)	3.6 (91)	0.97 (25)	1.31 (33)	6.66 (169)
ASME B16.5 (ANSI) 600	2 (51)	2.12 (54)	0.97 (25)	1.31 (33)	8.66 (219)
	3 (76)	3.6 (91)	0.97 (25)	1.31 (33)	8.66 (219)
DIN 2501 PN 10–40	DN 50	2.4 (61)	0.97 (25)	1.31 (33)	6.66 (169)
DIN 2501 PN 25/40	DN 80	3.6 (91)	0.97 (25)	1.31 (33)	6.66 (169)
	DN 100	3.6 (91)	0.97 (25)	1.31 (33)	6.66 (169)
DIN 2501 PN 10/16	DN 100	3.6 (91)	0.97 (25)	1.31 (33)	6.66 (169)

(1) Tolerances are 0.040 (1,02), –0.020 (0,51).

A.6 Ordering Information

Table A-6. 2051C Coplanar Pressure Transmitters Ordering Information

★ The Standard offering represents the most common options. The starred options (★) should be selected for best delivery. The Expanded offering is subject to additional delivery lead time.

Model	Transmitter Type			
2051C	Coplanar Pressure Transmitter			
Measurement Type				
Standard				Standard
D	Differential			★
G	Gage			★
Expanded				
A(1)	Absolute			
Pressure Range				
	2051CD	2051CG	2051CA	
Standard				Standard
1	–25 to 25 inH$_2$O (–62.2 to 62.2 mbar)	–25 to 25 inH$_2$O (–62,1 to 62.2 mbar)	0 to 30 psia (0 to 2.1 bar)	★
2	–250 to 250 inH2O (–623 to 623 mbar)	–250 to 250 inH$_2$O (–621 to 623 mbar)	0 to 150 psia (0 to 10.3 bar)	★
3	–1000 to 1000 inH$_2$O (–2.5 to 2.5 bar)	–393 to 1000 inH$_2$O (–0.98 to 2.5 bar)	0 to 800 psia (0 to 55.2 bar)	★
4	–300 to 300 psi (–20.7 to 20.7 bar)	–14.2 to 300 psi (–0.98 to 20.7 bar)	0 to 4000 psia (0 to 275.8 bar)	★
5	–2000 to 2000 psi (–137.9 to137.9 bar)	–14.2 to 2000 psi (–0.98 to 137.9 bar)	Not Applicable	★
Expanded				
0(2)	–3 to 3 inH$_2$O (–7.5 to 7.5 mbar)	Not Applicable	Not Applicable	
Transmitter Output				
Standard				Standard
X	Wireless			★
Materials of Construction				
	Process Flange Type	Flange Material	Drain/Vent	
Standard				Standard
2	Coplanar	SST	SST	★
3(3)	Coplanar	Cast C-276	Alloy C-276	★
4	Coplanar	Cast Alloy 400	Alloy 400/K-500	★
5	Coplanar	Plated CS	SST	★
7(3)	Coplanar	SST	Alloy C-276	★
8(3)	Coplanar	Plated CS	Alloy C-276	★
0	Alternate Process Connection			★
Isolating Diaphragm				
Standard				Standard
2(3)	316L SST			★
3(3)	Alloy C-276			★

Table A-6. 2051C Coplanar Pressure Transmitters Ordering Information

★ The Standard offering represents the most common options. The starred options (★) should be selected for best delivery. The Expanded offering is subject to additional delivery lead time.

O-ring			
Standard			Standard
A	Glass-filled PTFE		★
B	Graphite-filled PTFE		★
Sensor Fill Fluid			
Standard			Standard
1	Silicone		★
Housing Material		**Conduit Entry Size**	
Standard			Standard
P	Engineered Polymer	N/A	★

Wireless Options (Requires Wireless output code X and Engineered Polymer housing code P)

Wireless Transmit Rate, Operating Frequency and Protocol		
Standard		Standard
WA3	User Configurable Transmit Rate, 2.4 GHz WirelessHART	★
Antenna and SmartPower		
Standard		Standard
WP5	Internal Antenna, Compatible with Green Power Module (I.S. Power Module Sold Separately)	★

Options (Include with selected model number)

Alternate Flange(4)		
Standard		Standard
H2	Traditional Flange, 316 SST, SST Drain/Vent	★
H3(3)	Traditional Flange, Alloy C, Alloy C-276 Drain/Vent	★
H4	Traditional Flange, Cast Alloy 400, Alloy 400/K-500 Drain/Vent	★
H7(3)	Traditional Flange, 316 SST, Alloy C-276 Drain/Vent	★
HJ	DIN Compliant Traditional Flange, SST, 1/16 in. Adapter/Manifold Bolting	★
FA	Level Flange, SST, 2 in., ANSI Class 150, Vertical Mount	★
FB	Level Flange, SST, 2 in., ANSI Class 300, Vertical Mount	★
FC	Level Flange, SST, 3 in., ANSI Class 150, Vertical Mount	★
FD	Level Flange, SST, 3 in., ANSI Class 300, Vertical Mount	★
FP	DIN Level Flange, SST, DN 50, PN 40, Vertical Mount	★
FQ	DIN Level Flange, SST, DN 80, PN 40, Vertical Mount	★
Expanded		
HK(5)	DIN Compliant Traditional Flange, SST, 10 mm Adapter/Manifold Bolting	
HL	DIN Compliant Traditional Flange, SST, 12mm Adapter/Manifold Bolting (Not available on 2051CD0)	
Manifold Assembly(5)(9)		
Standard		Standard
S5	Assemble to Rosemount 305 Integral Manifold	★
S6	Assemble to Rosemount 304 Manifold or Connection System	★
Integral Mount Primary Element(5)(9)		
Standard		Standard
S4(6)	Assemble to Rosemount Annubar or Rosemount 1195 Integral Orifice	★
S3	Assemble to Rosemount 405 Compact Orifice Plate	★

Table A-6. 2051C Coplanar Pressure Transmitters Ordering Information

★ The Standard offering represents the most common options. The starred options (★) should be selected for best delivery. The Expanded offering is subject to additional delivery lead time.

Seal Assemblies[9]		
Standard		Standard
S1[7]	Assemble to one Rosemount 1199 seal	★
S2[8]	Assemble to two Rosemount 1199 seals	★
All-Welded Seal Assemblies (for high vacuum applications)[9]		
Standard		Standard
S0	One Seal, All-Welded System (Direct Mount Connection Type)	★
S7	One Seal, All-Welded System (Capillary Connection Type)	★
S8	Two Seals, All-Welded System (Capillary Connection Type)	★
S9	Two Seals, All-Welded System (One Direct Mount and One Capillary Connection Type)	★
Mounting Bracket		
Standard		Standard
B1	Traditional Flange Bracket for 2-in. Pipe Mounting, CS Bolts	★
B2	Traditional Flange Bracket for Panel Mounting, CS Bolts	★
B3	Traditional Flange Flat Bracket for 2-in. Pipe Mounting, CS Bolts	★
B4	Coplanar Flange Bracket for 2-in. Pipe or Panel Mounting, all SST	★
B7	B1 Bracket with Series 300 SST Bolts	★
B8	B2 Bracket with Series 300 SST Bolts	★
B9	B3 Bracket with Series 300 SST Bolts	★
BA	SST B1 Bracket with Series 300 SST Bolts	★
BC	SST B3 Bracket with Series 300 SST Bolts	★
Product Certifications		
Standard		Standard
I1	ATEX Intrinsic Safety	★
I2	INMETRO Intrinsic Safety	★
I3	China Intrinsic Safety	★
I4	TIIS Intrinsic Safety	★
I5	FM Intrinsically Safe, Division 2	★
I6	CSA Intrinsic Safety	★
I7	IECEx Intrinsic Safety	★
Drinking Water Approval		
Standard		Standard
DW[10]	NSF drinking water approval	★
Bolting Material		
Standard		Standard
L4	Austenitic 316 SST Bolts	★
L5	ASTM A 193, Grade B7M Bolts	★
L6	Alloy K-500 Bolts	★
Display and Interface Options		
Standard		Standard
M5	LCD Display	★

Table A-6. 2051C Coplanar Pressure Transmitters Ordering Information

★ The Standard offering represents the most common options. The starred options (★) should be selected for best delivery. The Expanded offering is subject to additional delivery lead time.

Calibration Certificate		
Standard		Standard
Q4	Calibration Certificate	★
QG	Calibration Certificate and GOST Verification Certificate	★
QP	Calibration certification and tamper evident seal	★
Material Traceability Certification		
Standard		Standard
Q8	Material Traceability Certification per EN 10204 3.1.B	★
Hardware Adjustments		
Standard		Standard
DZ	Digital Zero Trim	★
Software Configuration		
Standard		Standard
C1(11)	Custom Software Configuration (Completed CDS 00806-0100-4001 required with order)	★
Gage Pressure Calibration		
Standard		Standard
C3	Gage Calibration (Model 2051CA4 only)	★
Pressure Testing		
Expanded		
P1	Hydrostatic Testing with Certificate	
Cleaning Process Area		
Expanded		
P2	Cleaning for Special Service	
P3	Cleaning for <1 PPM Chlorine / Fluorine	
Pressure Calibration		
Expanded		
P4	Calibrate at Line Pressure *(Specify Q48 on order for corresponding certificate)*	
Performance		
Standard		Standard
P8(12)	High Performance Option	★
Flange Adapters		
Standard		Standard
DF(13)	1/2-14 NPT flange adapter(s)	★
Vent/Drain Valves		
Expanded		
D7	Coplanar Flange Without Drain / Vent Ports	

Table A-6. 2051C Coplanar Pressure Transmitters Ordering Information

★ The Standard offering represents the most common options. The starred options (★) should be selected for best delivery. The Expanded offering is subject to additional delivery lead time.

RC¹/₄ RC¹/₂ Process Connection		
Expanded		
D9(14)	RC ¼ Flange with RC ½ Flange Adapter, CS - SST	
Max Static Line Pressure		
Standard		Standard
P9	4500 psig (310 bar) Static Pressure Limit (2051CD Ranges 2–5 only)	★
Surface Finish		
Standard		Standard
Q16	Surface finish certification for sanitary remote seals	★
Toolkit Total System Performance Reports		
Standard		Standard
QZ	Remote Seal System Performance Calculation Report	★
Typical Model Number: 2051CD 2 X 2 2 A 1 P WA3 WP5 B4 M5		

(1) Wireless output (code X) available in absolute measurement type (code A) with only range 1-4, 316 SST isolating diaphragm material (code 2), silicone fill fluid (code 1), and housing code (code P).
(2) 2051CD0 is available only with Output Code A, Process Flange Code 0 (Alternate Flange H2, H7, HJ, or HK), Isolating Diaphragm Code 2, O-ring Code A, and Bolting Option L4.
(3) Materials of Construction comply with recommendations per NACE MR0175/ISO 15156 for sour oil field production environments. Environmental limits apply to certain materials. Consult latest standard for details. Selected materials also conform to NACE MR0103 for sour refining environments.
(4) Requires 0 code in Materials of Construction for Alternate Process Connection.
(5) Not valid with optional code P9 for 4500 psi Static Pressure.
(6) Process Flange limited to Coplanar (codes 2, 3, 5, 7, 8) or Traditional (H2, H3, H7).
(7) Not valid with optional code D9 for RC1/2 Adaptors.
(8) Not valid for optional codes DF and D9 for Adaptors.
(9) "Assemble-to" items are specified separately and require a completed model number.
(10) Not available with Alloy C-276 isolator (3 code), tantalum isolator (5 code), all cast C-276 flanges, all plated CS flanges, all DIN flanges, all Level flanges, assemble-to manifolds (S5 and S6 codes), assemble-to seals (S1 and S2 codes), assemble-to primary elements (S3 and S4 codes), surface finish certification (Q16 code), and remote seal system report (QZ code).
(11) Not available with Fieldbus (output code F) or Profibus (output code W).
(12) High Performance Option includes 0.04% Reference Accuracy. See Performance Specifications *for details.*
(13) Not valid with Alternate Process Connection options S3, S4, S5, and S6.
(14) Not available with Alternate Process Connection; DIN Flanges and Level Flanges.

Table A-7. 2051T In-Line Pressure Transmitter Ordering Information

★ The Standard offering represents the most common options. The starred options (★) should be selected for best delivery. The Expanded offering is subject to additional delivery lead time.

Model	Transmitter Type		
2051T	In-Line Pressure Transmitter		
Pressure Type			
Standard			Standard
G	Gage		★
A(1)	Absolute		★
Pressure Range			
	2051TG(2)	**2051TA**	
Standard			Standard
1	-14.7 to 30 psi (-1.0 to 2.1 bar)	0 to 30 psia (0 to 2.1 bar)	★
2	-14.7 to 150 psi (-1.0 to 10.3 bar)	0 to 150 psia (0 to 10.3 bar)	★
3	-14.7 to 800 psi (-1.0 to 55 bar)	0 to 800 psia (0 to 55 bar)	★
4	-14.7 to 4000 psi (-1.0 to 276 bar)	0 to 4000 psia (0 to 276 bar)	★
5	-14.7 to 10000 psi (-1.0 to 689 bar)	0 to 10000 psia (0 to 689 bar)	★
Transmitter Output			
Standard			Standard
X	Wireless		★
Process Connection Style			
Standard			Standard
2B	1/2–14 NPT Female		★
2C(3)	G½ A DIN 16288 Male (Available in SST for Range 1–4 only)		★
Isolating Diaphragm		**Process Connection Wetted Parts Material**	
Standard			Standard
2(4)	316L SST	316L SST	★
3(4)	Alloy C-276	Alloy C-276	★
Sensor Fill Fluid			
Standard			Standard
1	Silicone		★
Housing Material		**Conduit Entry Size**	
Standard			Standard
P	Engineered Polymer with Aluminum Module Material	N/A	★

Wireless Options (Requires Wireless output code X and Engineered Polymer housing code P)

Wireless Transmit Rate, Operating Frequency and Protocol		
Standard		Standard
WA3	User Configurable Transmit Rate, 2.4 GHz WirelessHART	★
Antenna and SmartPower		
Standard		Standard
WP5	Internal Antenna, Compatible with Green Power Module (I.S. Power Module Sold Separately)	★

Options (Include with selected model number)

Manifold Assemblies		
Standard		Standard
S5(5)	Assemble to Rosemount 306 Integral Manifold	★
Seal Assemblies		
Standard		Standard
S1(5)	Assemble to one Rosemount 1199 seal	★

Table A-7. 2051T In-Line Pressure Transmitter Ordering Information

★ The Standard offering represents the most common options. The starred options (★) should be selected for best delivery. The Expanded offering is subject to additional delivery lead time.

Mounting Bracket		
Standard		Standard
B4	Bracket for 2-in. Pipe or Panel Mounting, All SST	★
Product Certifications		
Standard		Standard
I1	ATEX Intrinsic Safety	★
I2	INMETRO Intrinsic Safety	★
I3	China Intrinsic Safety	★
I4	TIIS Intrinsic Safety	★
I5	FM Intrinsically Safe, Division 2	★
I6	CSA Intrinsic Safety	★
I7	IECEx Intrinsic Safety	★
Drinking Water Approval		
Standard		Standard
DW(6)	NSF drinking water approval	★
Calibration Certification		
Standard		Standard
Q4	Calibration Certificate	★
QG	Calibration Certificate and GOST Verification Certificate	★
QP	Calibration Certification and tamper evident seal	★
Material Traceability Certification		
Standard		Standard
Q8	Material Traceability Certification per EN 10204 3.1.B	★
Zero/Span Adjustment		
Standard		Standard
DZ	Digital Zero Trim	★
Display and Interface Options		
Standard		Standard
M5	LCD Display	★
Wireless Sensor Module		
Standard		Standard
WSM	Wireless SST Sensor Module	★
Software Configuration		
Standard		Standard
C1(7)	Custom Software Configuration (Completed CDS 00806-0100-4001 required with order)	★
Pressure Testing		
Expanded		
P1	Hydrostatic Testing with Certificate	
Cleaning Process Area(8)		
Expanded		
P2	Cleaning for Special Service	
P3	Cleaning for <1 PPM Chlorine / Fluorine	
Performance		
Standard		Standard
P8(9)	High Performance Option	★

Table A-7. 2051T In-Line Pressure Transmitter Ordering Information

★ The Standard offering represents the most common options. The starred options (★) should be selected for best delivery. The Expanded offering is subject to additional delivery lead time.

Surface Finish		
Standard		Standard
Q16	Surface finish certification for sanitary remote seals	★
Toolkit Total System Performance Reports		
Standard		Standard
QZ	Remote Seal System Performance Calculation Report	★
Typical Model Number:	**2051T G 5 X 2A 2 1 P WA3 WP5 B4 M5**	

(1) Wireless output (code X) available in absolute measurement type (code A) with only range 1-5, with 1/2 14-NPT process connection (code 2B) and housing code P.
(2) 2051TG lower range limit varies with atmospheric pressure.
(3) Wireless output (code X) only available in G1/2 A DIN 16288 Male process connection (code 2C) with range 1-4, 316L SST isolating diaphragm 9code 2), silicone fill fluid (code 1), and housing code (code P).
(4) Materials of Construction comply with recommendations per NACE MR0175/ISO 15156 for sour oil field production environments. Environmental limits apply to certain materials. Consult latest standard for details. Selected materials also conform to NACE MR0103 for sour refining environments.
(5) "Assemble-to" items are specified separately and require a completed model number.
(6) Not available with Alloy C-276 isolator (3 code), tantalum isolator (5 code), all cast C-276 flanges, all plated CS flanges, all DIN flanges, all Level flanges, assemble-to manifolds (S5 and S6 codes), assemble-to seals (S1 and S2 codes), assemble-to primary elements (S3 and S4 codes), surface finish certification (Q16 code), and remote seal system report (QZ code).
(7) Not available with fieldbus (output code F) or Profibus protocols (output code W).
(8) Not valid with Alternate Process Connection S5.
(9) High Performance Option includes 0.04% Reference Accuracy. See Performance Specifications *for details.*

Table A-8. Rosemount 2051L Liquid Level Transmitter Ordering Information

★ The Standard offering represents the most common options. The starred options (★) should be selected for best delivery. The Expanded offering is subject to additional delivery lead time.

Model	**Transmitter Type**			
2051L	Liquid Level Transmitter			
Pressure Range				
Standard				**Standard**
2	–250 to 250 inH_2O (–0,6 to 0,6 bar)			★
3	–1000 to 1000 inH_2O (–2,5 to 2,5 bar)			★
4	–300 to 300 psi (–20,7 to 20,7 bar)			★
Transmitter Output				
Standard				**Standard**
X	Wireless			★
Process Connection Size, Material, Extension length (High Side)				
Standard				**Standard**
Code	**Process Connection Size**	**Material**	**Extension Length**	★
G0(1)	2-in./DN50	316L SST	Flush Mount Only	★
H0(1)	2-in./DN50	Alloy C-276	Flush Mount Only	★
J0	2-in./DN50	Tantalum	Flush Mount Only	★
A0(1)	3-in./DN80	316L SST	Flush Mount	★
A2(1)	3-in./DN80	316L SST	2-in./50 mm	★
A4(1)	3-in./DN80	316L SST	4-in./100mm	★
A6(1)	3-in./DN80	316L SST	6-in./150mm	★
B0(1)	4-in./DN100	316L SST	Flush Mount	★
B2(1)	4-in./DN100	316L SST	2-in./50 mm	★
B4(1)	4-in./DN100	316L SST	4-in./100mm	★
B6(1)	4-in./DN100	316L SST	6-in./150mm	★
C0(1)	3-in./DN80	Alloy C-276	Flush Mount	★
C2(1)	3-in./DN80	Alloy C-276	2-in./50 mm	★
C4(1)	3-in./DN80	Alloy C-276	4-in./100mm	★
C6(1)	3-in./DN80	Alloy C-276	6-in./150mm	★
D0(1)	4-in./DN100	Alloy C-276	Flush Mount	★
D2(1)	4-in./DN100	Alloy C-276	2-in./50 mm	★
D4(1)	4-in./DN100	Alloy C-276	4-in./100mm	★
D6(1)	4-in./DN100	Alloy C-276	6-in./150mm	★
E0	3-in./DN80	Tantalum	Flush Mount Only	★
F0	4-in./DN100	Tantalum	Flush Mount Only	★
Mounting Flange Size, Rating, Material (High Side)				
	Size	Rating	Material	
Standard				**Standard**
M	2-in.	ANSI/ASME B16.5 Class 150	CS	★
A	3-in.	ANSI/ASME B16.5 Class 150	CS	★
B	4-in.	ANSI/ASME B16.5 Class 150	CS	★
N	2-in.	ANSI/ASME B16.5 Class 300	CS	★
C	3-in.	ANSI/ASME B16.5 Class 300	CS	★
D	4-in.	ANSI/ASME B16.5 Class 300	CS	★

Table A-8. Rosemount 2051L Liquid Level Transmitter Ordering Information

★ The Standard offering represents the most common options. The starred options (★) should be selected for best delivery. The Expanded offering is subject to additional delivery lead time.

P	2-in.	ANSI/ASME B16.5 Class 600	CS	★
E	3-in.	ANSI/ASME B16.5 Class 600	CS	★
X(1)	2-in.	ANSI/ASME B16.5 Class 150	SST	★
F(1)	3-in.	ANSI/ASME B16.5 Class 150	SST	★
G(1)	4-in.	ANSI/ASME B16.5 Class 150	SST	★
Y(1)	2-in.	ANSI/ASME B16.5 Class 300	SST	★
H(1)	3-in.	ANSI/ASME B16.5 Class 300	SST	★
J(1)	4-in.	ANSI/ASME B16.5 Class 300	SST	★
Z(1)	2-in.	ANSI/ASME B16.5 Class 600	SST	★
L(1)	3-in.	ANSI/ASME B16.5 Class 600	SST	★
Q	DN 50	PN 10-40 per EN 1092-1	CS	★
R	DN 80	PN 40 per EN 1092-1	CS	★
S	DN 100	PN 40 per EN 1092-1	CS	★
V	DN 100	PN 10/16 per EN 1092-1	CS	★
K(1)	DN 50	PN 10-40 per EN 1092-1	SST	★
T(1)	DN 80	PN 40 per EN 1092-1	SST	★
U(1)	DN 100	PN 40 per EN 1092-1	SST	★
W(1)	DN 100	PN 10/16 per EN 1092-1	SST	★
7(1)	4 in.	ANSI/ASME B16.5 Class 600	SST	★
Expanded				
1	—	10K per JIS B2238	CS	
2	—	20K per JIS B2238	CS	
3	—	40K per JIS B2238	CS	
4(1)	—	10K per JIS B2238	316 SST	
5(1)	—	20K per JIS B2238	316 SST	
6(1)	—	40K per JIS B2238	316 SST	

Seal Fill Fluid (High Side)		**Specific Gravity**	**Temperature Limits (Ambient Temperature of 70° F (21° C))**	
Standard				**Standard**
A	Syltherm XLT	0.85	-102 to 293 °F (-75 to 145 °C)	★
C	Silicone 704	1.07	32 to 401 °F (0 to 205 °C)	★
D	Silicone 200	0.93	-49 to 401 °F (-45 to 205 °C)	★
H	Inert (Halocarbon)	1.85	-49 to 320 °F (-45 to 160 °C)	★
G	Glycerine and Water	1.13	5 to 203 °F (-15 to 95 °C)	★
N	Neobee M-20	0.92	5 to 401 °F (-15 to 205 °C)	★
P	Propylene Glycol and Water	1.02	5 to 203 F (-15 to 95 °C)	★

Low Pressure Side					
	Configuration	**Flange Adapter**	**Diaphragm Material**	**Sensor Fill Fluid**	
Standard					**Standard**
11(1)	Gage	SST	316L SST	Silicone	★
21(1)	Differential	SST	316L SST	Silicone	★
22(1)	Differential	SST	Alloy C-276	Silicone	★
31(1)	Tuned-System Assembly with Remote Seal	None	316L SST	Silicone *(Requires Option Code S1)*	★

Table A-8. Rosemount 2051L Liquid Level Transmitter Ordering Information

★ The Standard offering represents the most common options. The starred options (★) should be selected for best delivery. The Expanded offering is subject to additional delivery lead time.

O-ring			
Standard			**Standard**
A	Glass-filled PTFE		★
Housing Material		Conduit Entry Size	
Standard			**Standard**
P	Engineered Polymer	N/A	★

Wireless Options (Requires Wireless output code X and Engineered Polymer housing code P)

Wireless Transmit Rate, Operating Frequency and Protocol		
Standard		**Standard**
WA3	User Configurable Transmit Rate, 2.4 GHz WirelessHART	★
Antenna and SmartPower		
Standard		**Standard**
WP5	Internal Antenna, Compatible with Green Power Module (I.S. Power Module Sold Separately)	★

Options (Include with selected model number)

Seal Assemblies		
Standard		**Standard**
S1(2)	Assembled to One Rosemount 1199 Seal (Requires 1199M)	★
Product Certifications		
Standard		**Standard**
I1	ATEX Intrinsic Safety	★
I4	TIIS Intrinsic Safety	★
I5	FM Intrinsically Safe, Division 2	★
I6	CSA Intrinsic Safety	★
I7	IECEx Intrinsic Safety	★
I2	INMETRO Intrinsic Safety	★
I3	China Intrinsic Safety	★
Bolting Material		
Standard		**Standard**
L4	Austenitic 316 SST Bolts	★
L5	ASTM A 193, Grade B7M bolts	★
L6	Alloy K-500 Bolts	★
L8	ASTM A 193 Class 2, Grade B8M Bolts	★
Display and Interface Options		
Standard		**Standard**
M5	LCD Display	★
Calibration Certification		
Standard		**Standard**
Q4	Calibration Certificate	★
QP	Calibration Certificate and tamper evident seal	★
QG	Calibration Certificate and GOST Verification Certificate	★
Material Traceability Certification		
Standard		**Standard**
Q8	Material Traceability Certification per EN 102043.1	★

Table A-8. Rosemount 2051L Liquid Level Transmitter Ordering Information

★ The Standard offering represents the most common options. The starred options (★) should be selected for best delivery. The Expanded offering is subject to additional delivery lead time.

Toolkit Total System Performance Reports				
Standard				**Standard**
QZ	Remote Seal System Performance Calculation Report			★
Hardware Adjustments				
Standard				**Standard**
DZ	Digital Zero Trim			★
Software Configuration				
Standard				**Standard**
C1	Custom Software Configuration (Completed CDS 00806-0100-4001 required with order)			★
Lower Housing Flushing Connection Options				
	Ring Material	**Number**	**Size (NPT)**	
Standard				**Standard**
F1	316 SST	1	1/4-18 NPT	★
F2	316 SST	2	1/4-18 NPT	★
F3	Alloy C-276	1	1/4-18 NPT	★
F4	Alloy C-276	2	1/4-18 NPT	★
F7	316 SST	1	1/2-14 NPT	★
F8	316 SST	2	1/2-14 NPT	★
F9	Alloy C-276	1	1/2-14 NPT	★
F0	Alloy C-276	2	1/2-14 NPT	★
Typical Model Number: 2051L 2 X A0 D 21 A P WA3 WP5 M5 DZ F1				

(1) Materials of Construction comply with metallurgical requirements highlighted within NACE MR0175/ISO 15156 for sour oil field production environments. Environmental limits apply to certain materials. Consult latest standard for details. Selected materials also conform to NACE MR0103 for sour refining environments.

(2) "Assemble-to" items are specified separately and require a completed model number.

Table A-9. Rosemount 2051CFA Annubar Flowmeter Ordering Information

★ The Standard offering represents the most common options. The starred options (★) should be selected for best delivery. The Expanded offering is subject to additional delivery lead time.

Model	Product Description	
2051CFA	Annubar Flowmeter	
Measurement Type		
Standard		Standard
D	Differential Pressure	★
Fluid Type		
Standard		Standard
L	Liquid	★
G	Gas	★
S	Steam	★
Line Size		
Standard		Standard
020	2-in. (50 mm)	★
025	2 1/2-in. (63.5 mm)	★
030	3-in. (80 mm)	★
035	3 1/2-in. (89 mm)	★
040	4-in. (100 mm)	★
050	5-in. (125 mm)	★
060	6-in. (150 mm)	★
070	7-in. (175 mm)	★
080	8-in. (200 mm)	★
100	10-in. (250 mm)	★
120	12-in. (300 mm)	★
Expanded		
140	14-in. (350 mm)	
160	16-in. (400 mm)	
180	18-in. (450 mm)	
200	20-in. (500 mm)	
240	24-in. (600 mm)	
300	30-in. (750 mm)	
360	36-in. (900 mm)	
420	42-in. (1066 mm)	
480	48-in. (1210 mm)	
600	60-in. (1520 mm)	
720	72-in. (1820 mm)	
780	78-in (1950 mm)	
840	84-in. (2100 mm)	
900	90-in. (2250 mm)	
960	96-in (2400 mm)	
Pipe I.D. Range		
Standard		Standard
C	Range C from the Pipe I.D. table	★
D	Range D from the Pipe I.D. table	★
Expanded		
A	Range A from the Pipe I.D. table	
B	Range B from the Pipe I.D. table	
E	Range E from the Pipe I.D. table	
Z	Non-standard Pipe I.D. Range or Line Sizes greater than 12 inches	

Table A-9. Rosemount 2051CFA Annubar Flowmeter Ordering Information

★ The Standard offering represents the most common options. The starred options (★) should be selected for best delivery. The Expanded offering is subject to additional delivery lead time.

Pipe Material / Mounting Assembly Material		
Standard		Standard
C	Carbon steel (A105)	★
S	316 Stainless Steel	★
0	No Mounting (Customer Supplied)	★
Expanded		
G	Chrome-Moly Grade F-11	
N	Chrome-Moly Grade F-22	
J	Chrome-Moly Grade F-91	
Piping Orientation		
Standard		Standard
H	Horizontal Piping	★
D	Vertical Piping with Downwards Flow	★
U	Vertical Piping with Upwards Flow	★
Annubar Type		
Standard		Standard
P	Pak-Lok	★
F	Flanged with opposite side support	★
Expanded		
L	Flange-Lok	
G	Gear-Drive Flo-Tap	
M	Manual Flo-Tap	
Sensor Material		
Standard		Standard
S	316 Stainless Steel	★
Expanded		
H	Alloy C-276	
Sensor Size		
Standard		Standard
1	Sensor size 1 — Line sizes 2-in. (50 mm) to 8-in. (200 mm)	★
2	Sensor size 2 — Line sizes 6-in. (150 mm) to 96-in. (2400 mm)	★
3	Sensor size 3 — Line sizes greater than 12-in. (300 mm)	★
Mounting Type		
Standard		Standard
T1	Compression or Threaded Connection	★
A1	150# RF ANSI	★
A3	300# RF ANSI	★
A6	600# RF ANSI	★
D1	DN PN16 Flange	★
D3	DN PN40 Flange	★
D6	DN PN100 Flange	★
Expanded		
A9(1)	900# RF ANSI	
AF(1)	1500# RF ANSI	
AT(1)	2500 # RF ANSI	
R1	150# RTJ Flange	
R3	300# RTJ Flange	

Table A-9. Rosemount 2051CFA Annubar Flowmeter Ordering Information

★ The Standard offering represents the most common options. The starred options (★) should be selected for best delivery. The Expanded offering is subject to additional delivery lead time.

R6	600#RTJFlange	
R9(1)	900#RTJFlange	
RF(1)	1500#RTJFlange	
RT(1)	2500#RTJFlange	
Opposite Side Support or Packing Gland		
Standard		Standard
0	No opposite side support or packing gland (Required for Pak-Lok and Flange-Lok models)	★
	Opposite Side Support – Required for Flanged Models	
C	NPT Threaded Opposite Support Assembly – Extended Tip	★
D	Welded Opposite Support Assembly – Extended Tip	★
Isolation Valve for Flo-Tap Models		
Standard		Standard
0	Not Applicable or Customer Supplied	★
Temperature Measurement		
Standard		Standard
T	Integral RTD – not available with Flanged model greater than class 600#	★
0	No Temperature Sensor	★
Transmitter Connection Platform		
Standard		Standard
3	Direct-mount, Integral 3-valve Manifold–not available with Flanged model greater than class 600	★
5	Direct -mount, 5-valve Manifold – not available with Flanged model greater than class 600	★
7	Remote-mount NPT Connections (1/2-in. NPT)	★
Expanded		
8	Remote-mount SW Connections (1/2-in.)	
Differential Pressure Range		
Standard		Standard
1	0 to 25 in H_2O (0 to 62,3 mbar)	★
2	0 to 250 in H_2O (0 to 623 mbar)	★
3	0 to 1000 in H_2O (0 to 2,5 bar)	★
Transmitter Output		
Standard		Standard
X	Wireless	★

Transmitter Housing Material		**Conduit Entry Size**	
Standard			Standard
P	Engineered Polymer	N/A	★

Transmitter Performance Class		
Standard		Standard
1	2.30% flow rate accuracy, 8:1 flow turndown, 5-yr. stability	★

Wireless options (Requires wireless output code X and Engineered Polymer housing code P)

Wireless Transmit Rate, Operating Frequency and Protocol	
Standard	
WA3	User Configurable Transmit Rate, 2.4GHz WirelessHART
Antenna and SmartPower	
Standard	
WP5	Internal Antenna, Compatible with Green Power Module (I.S. Power Module Sold Separately)

Table A-9. Rosemount 2051CFA Annubar Flowmeter Ordering Information

★ The Standard offering represents the most common options. The starred options (★) should be selected for best delivery. The Expanded offering is subject to additional delivery lead time.

Options (Include with selected model number)

Pressure Testing		
Expanded		
P1[2]	Hydrostatic Testing with Certificate	
PX[2]	Extended Hydrostatic Testing	
Special Cleaning		
Expanded		
P2	Cleaning for Special Services	
PA	Cleaning per ASTM G93 Level D (Section 11.4)	
Material Testing		
Expanded		
V1	Dye Penetrant Exam	
Material Examination		
Expanded		
V2	Radiographic Examination	
Flow Calibration		
Expanded		
W1	Flow Calibration (Average K)	
Special Inspection		
Standard		Standard
QC1	Visual & Dimensional Inspection with Certificate	★
QC7	Inspection & Performance Certificate	★
Surface Finish		
Standard		Standard
RL	Surface finish for Low Pipe Reynolds # in Gas & Steam	★
RH	Surface finish for High Pipe Reynolds # in Liquid	★
Material Traceability Certification		
Standard		Standard
Q8[3]	Material Traceability Certification per EN 10474:20043.1	★
Code Conformance[4]		
Expanded		
J2	ANSI / ASME B31.1	
J3	ANSI / ASME B31.3	
Materials Conformance		
Expanded		
J5[5]	NACE MR-0175 / ISO 15156	
Country Certification		
Standard		Standard
J6	European Pressure Directive (PED)	★
Expanded		
J1	Canadian Registration	
Installed in Flanged Pipe Spool Section		
Expanded		
H3	150# Flanged Connection with Rosemount Standard Length and Schedule	
H4	300# Flanged Connection with Rosemount Standard Length and Schedule	
H5	600# Flanged Connection with Rosemount Standard Length and Schedule	
Instrument Connections for Remote Mount Options		
Standard		Standard
G2	Needle Valves, Stainless Steel	★
G6	OS&Y Gate Valve, Stainless Steel	★

Table A-9. Rosemount 2051CFA Annubar Flowmeter Ordering Information

★ The Standard offering represents the most common options. The starred options (★) should be selected for best delivery. The Expanded offering is subject to additional delivery lead time.

Expanded		
G1	Needle Valves, Carbon Steel	
G3	Needle Valves, Alloy C-276	
G5	OS&Y Gate Valve, Carbon Steel	
G7	OS&Y Gate Valve, Alloy C-276	
Special Shipment		
Standard		Standard
Y1	Mounting Hardware Shipped Separately	★
Special Dimensions		
Expanded		
VM	Variable Mounting	
VT	Variable Tip	
VS	Variable length Spool Section	
Product Certifications		
Standard		Standard
I1	ATEX Intrinsic Safety	★
I2	INMETRO Intrinsic Safety	★
I3	China Intrinsic Safety	★
I4	TIIS Intrinsic Safety	★
I5	FM Intrinsically Safe, Division 2	★
I6	CSA Intrinsic Safety	★
I7	IECEx Intrinsic Safety	★
Sensor Fill Fluid and O-ring Options		
Standard		Standard
L2	Graphite-Filled (PTFE) O-ring	★
Display and Interface Options		
Standard		Standard
M5	LCD Display	★
Transmitter Calibration Certification		
Standard		Standard
Q4	Calibration Certificate for Transmitter	★
Manifold for Remote Mount Option		
Standard		Standard
F2	3-Valve Manifold, Stainless Steel	★
F6	5-Valve Manifold, Stainless Steel	★
Expanded		
F1	3-Valve Manifold, Carbon Steel	
F3	3-Valve Manifold, Alloy C-276	
F5	5-Valve Manifold, Carbon Steel	
F7	5-Valve Manifold, Alloy C-276	
Hardware Adjustments		
Standard		Standard
DZ	Digital Zero Sensor Trim Configuration Button	★
Typical Model Number:	**2051CFA D L 060 D C H P S 2 T1 0 0 0 3 2 X P 1 WA3 WP5 M5**	

(1) Available in remote mount applications only.
(2) Applies to assembled flowmeter only, mounting not tested.
(3) Instrument Connections for Remote Mount Options and Isolation Valves for Flo-tap Models are not included in the Material Traceability Certification.
(4) Not available with Transmitter Connection Platform 6.
(5) Materials of Construction comply with metallurgical requirements within NACE MR0175/ISO for sour oil field production environments. Environmental limits apply to certain materials. Consult latest standard for details. Selected materials also conform to NACE MR0103 for sour refining environments.

Table A-10. Rosemount 2051CFC Compact Flowmeter Ordering Information

★ The Standard offering represents the most common options. The starred options (★) should be selected for best delivery. The Expanded offering is subject to additional delivery lead time.

Model	Product Description	
2051CFC	Compact Flowmeter	
Measurement Type		
Standard		Standard
D	Differential Pressure	★
Primary Element Technology		
Standard		Standard
C	Conditioning Orifice Plate	★
P	Orifice Plate	★
A	Annubar® Averaging Pitot Tube	★
Material Type		
Standard		Standard
S	316 SST	★
Line Size		
Standard		Standard
005(1)	1/2-in. (15 mm)	★
010(1)	1-in. (25 mm)	★
015(1)	1 1/2-in. (40 mm)	★
020	2-in. (50 mm)	★
030	3-in. (80 mm)	★
040	4-in. (100 mm)	★
060	6-in. (150 mm)	★
080	8-in. (200 mm)	★
100(2)	10-in. (250 mm)	★
120	12-in. (300 mm)	★
Primary Element Type		
Standard		Standard
N000	Annubar Sensor Size 1	★
N040	0.40 Beta Ratio	★
N065(3)	0.65 Beta Ratio	★
Temperature Measurement		
Standard		Standard
0	No Temperature Sensor	★
Expanded		
R	Remote Thermowell and RTD	
Transmitter Connection Platform		
Standard		Standard
3	Direct Mount	★
7	Remote-mount, NPT Connections	★
Differential Pressure Range		
Standard		Standard
1	0 to 25 in H_2O (0 to 62,3 mbar)	★
2	0 to 250 in H_2O (0 to 623 mbar)	★
3	0 to 1000 in H_2O (0 to 2,5 bar)	★
Transmitter Output		
Standard		Standard
X	Wireless	★

Table A-10. Rosemount 2051CFC Compact Flowmeter Ordering Information

★ The Standard offering represents the most common options. The starred options (★) should be selected for best delivery. The Expanded offering is subject to additional delivery lead time.

Transmitter Housing Material		**Conduit Entry Size**	
Standard			Standard
P	Engineered Polymer	N/A	★
Transmitter Performance Class			
Standard			Standard
1	Up to ±2.00% flow rate accuracy, 8:1 flow turndown, 5-year stability		★

Wireless options (Requires wireless output code X and Engineered Polymer housing code P)

Wireless Transmit Rate, Operating Frequency and Protocol	
Standard	
WA3	User Configurable Transmit Rate, 2.4GHz WirelessHART
Antenna and SmartPower	
Standard	
WP5	Internal Antenna, Compatible with Green Power Module (I.S. Power Module Sold Separately)

Options (Include with selected model number)

Installation Accessories		
Standard		Standard
AB	ANSI Alignment Ring (150#) (Only required for 10-in. (250 mm) and 12-in. (300mm) line sizes)	★
AC	ANSI Alignment Ring (300#) (Only required for 10-in. (250 mm) and 12-in. (300mm) line sizes)	★
AD	ANSI Alignment Ring (600#) (Only required for 10-in. (250 mm) and 12-in. (300mm) line sizes)	★
DG	DIN Alignment Ring (PN16)	★
DH	DIN Alignment Ring (PN40)	★
DJ	DIN Alignment Ring (PN100)	★
Expanded		
JB	JIS Alignment Ring (10K)	
JR	JIS Alignment Ring (20K)	
JS	JIS Alignment Ring (40K)	
Remote Adapters		
Standard		Standard
FE	Flange Adapters 316 SST (1/2-in NPT)	★
High Temperature Application		
Expanded		
HT	Graphite Valve Packing (T_{max} = 850 °F)	
Flow Calibration		
Expanded		
WC(4)	Flow Calibration, 3 Pt, Conditioning Orifice Option C (All Pipe Schedules)	
WD(4) (5)	Flow Calibration, 10 Pt, Conditioning Option C (All Schedules), Annubar Option A (Schedule 40)	
Pressure Testing		
Expanded		
P1	Hydrostatic Testing with Certificate	
Special Cleaning		
Expanded		
P2(6)	Cleaning for Special Services	
PA	Cleaning per ASTM G93 Level D (Section 11.4)	
Special Inspection		
Standard		Standard
QC1	Visual & Dimensional Inspection with Certificate	★
QC7	Inspection and Performance Certificate	★

Table A-10. Rosemount 2051CFC Compact Flowmeter Ordering Information

★ The Standard offering represents the most common options. The starred options (★) should be selected for best delivery. The Expanded offering is subject to additional delivery lead time.

Transmitter Calibration Certification		
Standard		Standard
Q4	Calibration Certificate for Transmitter	★
Material Traceability Certification		
Standard		Standard
Q8	Material Traceability Certification per EN 10204:2004 3.1	★
Code Conformance		
Expanded		
J2	ANSI / ASME B31.1	
J3	ANSI / ASME B31.3	
J4	ANSI / ASME B31.8	
Materials Conformance		
Expanded		
J5(7)	NACE MR-0175 / ISO 15156	
Country Certification		
Expanded		
J1	Canadian Registration	
Product Certifications		
Standard		Standard
I1	ATEX Intrinsic Safety	★
I2	INMETRO Intrinsic Safety	★
I3	China Intrinsic Safety	★
I4	TIIS Intrinsic Safety	★
I5	FM Intrinsically Safe, Division 2	★
I6	CSA Intrinsic Safety	★
I7	IECEx Intrinsic Safety	★
Sensor Fill Fluid and O-ring Options		
Standard		Standard
L2	Graphite-Filled (PTFE) O-ring	★
Display and Interface Options		
Standard		Standard
M5	LCD Display	★
Manifold for Remote Mount Option		
Standard		Standard
F2	3-Valve Manifold, Stainless Steel	★
F6	5-Valve Manifold, Stainless Steel	★
Hardware Adjustments		
Standard		Standard
DZ	Digital Zero Sensor Trim Configuration Button	★
Typical Model Number: 2051CFC D C S 060 N 065 0 3 2 X P 1 WA3 WP5 WC M5 DZ		

(1) Available with primary element technology P only.
(2) 10-in. (250 mm) and 12-in. (300 mm) line sizes not available with Primary Element Technology A.
(3) For 2-in. (50 mm) line sizes the Primary Element Type is 0.6 for Primary Element Technology Code C.
(4) Not available with Primary Element Technology P.
(5) For Annubar Option A, consult factory for pipe schedules other than Sch. 40.
(6) Available with primary element technology C or P only.
(7) Materials of Construction comply with metallurgical requirements within NACE MR0175/ISO for sour oil field production environments. Environmental limits apply to certain materials. Consult latest standard for details. Selected materials also conform to NACE MR0103 for sour refining environments.

Table A-11. Rosemount 2051CFP Integral Orifice Flowmeter Ordering Information

★ The Standard offering represents the most common options. The starred options (★) should be selected for best delivery. The Expanded offering is subject to additional delivery lead time.

Model	Product Description	
2051CFP	Integral Orifice Flowmeter	
Measurement Type		
Standard		Standard
D	Differential Pressure	★
Body Material		
Standard		Standard
S	316 SST	★
Line Size		
Standard		Standard
005	1/2-in. (15 mm)	★
010	1-in. (25 mm)	★
015	1 1/2-in. (40 mm)	★
Process Connection		
Standard		Standard
T1	NPT Female Body (Not Available with Remote Thermowell and RTD)	★
S1(1)	Socket Weld Body (Not Available with Remote Thermowell and RTD)	★
P1	Pipe Ends: NPT Threaded	★
P2	Pipe ends: Beveled	★
D1	Pipe Ends: Flanged, DIN PN16, slip-on	★
D2	Pipe Ends: Flanged, DIN PN40, slip-on	★
D3	Pipe Ends: Flanged, DIN PN100, slip-on	★
W1	Pipe Ends: Flanged, RF, ANSI Class 150, weld-neck	★
W3	Pipe Ends: Flanged, RF, ANSI Class 300, weld-neck	★
W6	Pipe Ends: Flanged, RF, ANSI Class 600, weld-neck	★
Expanded		
A1	Pipe Ends: Flanged, RF, ANSI Class 150, slip-on	
A3	Pipe Ends: Flanged, RF, ANSI Class 300, slip-on	
A6	Pipe Ends: Flanged, RF, ANSI Class 600, slip-on	
R1	Pipe Ends: Flanged, RTJ, ANSI Class 150, slip-on	
R3	Pipe Ends: Flanged, RTJ, ANSI Class 300, slip-on	
R6	Pipe Ends: Flanged, RTJ, ANSI Class 600, slip-on	
Orifice Plate Material		
Standard		Standard
S	316 SST	★
Expanded		
H	Alloy C-276	
M	Alloy 400	
Bore Size Option		
Standard		Standard
0066	0.066-in. (1.68 mm) for 1/2-in. Pipe	★
0109	0.109-in. (2.77 mm) for 1/2-in. Pipe	★
0160	0.160-in. (4.06 mm) for 1/2-in. Pipe	★
0196	0.196-in. (4.98 mm) for 1/2-in. Pipe	★
0260	0.260-in. (6.60 mm) for 1/2-in. Pipe	★
0340	0.340-in. (8.64 mm) for 1/2-in. Pipe	★
0150	0.150-in. (3.81 mm) for 1-in. Pipe	★

Table A-11. Rosemount 2051CFP Integral Orifice Flowmeter Ordering Information

★ The Standard offering represents the most common options. The starred options (★) should be selected for best delivery. The Expanded offering is subject to additional delivery lead time.

0250	0.250-in. (6.35 mm) for 1-in. Pipe		★
0345	0.345-in. (8.76 mm) for 1-in. Pipe		★
0500	0.500-in. (12.70 mm) for 1-in. Pipe		★
0630	0.630-in. (16.00 mm) for 1-in. Pipe		★
0800	0.800-in. (20.32 mm) for 1-in. Pipe		★
0295	0.295-in. (7.49 mm) for 1 1/2-in. Pipe		★
0376	0.376-in. (9.55 mm) for 1 1/2-in. Pipe		★
0512	0.512-in. (13.00 mm) for 1 1/2-in. Pipe		★
0748	0.748-in. (19.00 mm) for 1 1/2-in. Pipe		★
1022	1.022-in. (25.96 mm) for 1 1/2-in. Pipe		★
1184	1.184-in. (30.07 mm) for 1 1/2-in. Pipe		★
Expanded			
0010	0.010-in. (0.25 mm) for 1/2-in. Pipe		
0014	0.014-in. (0.36 mm) for 1/2-in. Pipe		
0020	0.020-in. (0.51 mm) for 1/2-in. Pipe		
0034	0.034-in. (0.86 mm) for 1/2-in. Pipe		
Transmitter Connection Platform			
Standard			Standard
D3	Direct-mount, 3-Valve Manifold, SST		★
D5	Direct-mount, 5-Valve Manifold, SST		★
R3	Remote-mount, 3-Valve Manifold, SST		★
R5	Remote-mount, 5-Valve Manifold, SST		★
Expanded			
D4	Direct-mount, 3-Valve Manifold, Alloy C-276		
D6	Direct-mount, 5-Valve Manifold, Alloy C-276		
D7	Direct-mount, High Temperature, 5-Valve Manifold, SST		
R4	Remote-mount, 3-Valve Manifold, Alloy C-276		
R6	Remote-mount, 5-Valve Manifold, Alloy C-276		
Differential Pressure Ranges			
Standard			Standard
1	0 to 25 in H_2O (0 to 62,3 mbar)		★
2	0 to 250 in H_2O (0 to 623 mbar)		★
3	0 to 1000 in H_2O (0 to 2,5 bar)		★
Transmitter Output			
Standard			Standard
X	Wireless		★
Transmitter Housing Material		**Conduit Entry Size**	
Standard			Standard
P	Engineered Polymer	N/A	★
Transmitter Performance Class			
Standard			Standard
1	up to ±2.25% flow rate accuracy, 8:1 flow turndown, 5-year stability		★

Wireless options (Requires wireless option code X and Engineered Polymer housing code P)

Wireless Transmit Rate, Operating Frequency and Protocol	
Standard	
WA3	User Configurable Transmit Rate, 2.4GHz WirelessHART
Antenna and SmartPower	

Table A-11. Rosemount 2051CFP Integral Orifice Flowmeter Ordering Information

★ The Standard offering represents the most common options. The starred options (★) should be selected for best delivery. The Expanded offering is subject to additional delivery lead time.

Standard		
WP5	Internal Antenna, Compatible with Green Power Module (I.S. Power Module Sold Separately)	

Options (Include with selected model number)

Transmitter Body / Bolt Material		
Expanded		
GT	High Temperature (850 °F / 454 °C)	
Temperature Sensor		
Expanded		
RT(2)	Thermowell and RTD	
Optional Connection		
Standard		Standard
G1	DIN 19213 Transmitter Connection	★
Pressure Testing		
Expanded		
P1(3)	Hydrostatic Testing with Certificate	
Special Cleaning		
Expanded		
P2	Cleaning for Special Services	
PA	Cleaning per ASTM G93 Level D (Section 11.4)	
Material Testing		
Expanded		
V1	Dye Penetrant Exam	
Material Examination		
Expanded		
V2	Radiographic Examination	
Flow Calibration		
Expanded		
WD(4)	Discharge Coefficient Verification	
Special Inspection		
Standard		Standard
QC1	Visual & Dimensional Inspection with Certificate	★
QC7	Inspection and Performance Certificate	★
Material Traceability Certification		
Standard		Standard
Q8	Material Traceability Certification per EN 10204:2004 3.1	★
Code Conformance		
Expanded		
J2(5)	ANSI / ASME B31.1	
J3(5)	ANSI / ASME B31.3	
J4(5)	ANSI / ASME B31.8	
Materials Conformance		
Expanded		
J5(6)	NACE MR-0175 / ISO 15156	
Country Certification		
Standard		Standard
J6	European Pressure Directive (PED)	★
Expanded		
J1	Canadian Registration	

Table A-11. Rosemount 2051CFP Integral Orifice Flowmeter Ordering Information

★ The Standard offering represents the most common options. The starred options (★) should be selected for best delivery. The Expanded offering is subject to additional delivery lead time.

Transmitter Calibration Certification		
Standard		Standard
Q4	Calibration Certificate for Transmitter	★
Product Certifications		
Standard		Standard
I1	ATEX Intrinsic Safety	★
I2	INMETRO Intrinsic Safety	★
I3	China Intrinsic Safety	★
I4	TIIS Intrinsic Safety	★
I5	FM Intrinsically Safe, Division 2	★
I6	CSA Intrinsic Safety	★
I7	IECEx Intrinsic Safety	★
Sensor Fill Fluid and O-ring Options		
Standard		Standard
L2	Graphite-Filled (PTFE) O-ring	★
Display and Interface Options		
Standard		Standard
M5	LCD Display	★
Hardware Adjustments		
Standard		Standard
DZ	Digital Zero Sensor Trim Configuration Button	★
Typical Model Number: 2051CFP D S 010 W1 S 0500 D3 2 X P 1 WA3 WP5 I7 M5 DZ		

(1) To improve pipe perpendicularity for gasket sealing, socket diameter is smaller than standard pipe O.D.
(2) Thermowell Material is the same as the body material.
(3) Does not apply to Process Connection codes T1 and S1.
(4) Not available for bore sizes 0010, 0014, 0020, 0034, 0066, or 0109.
(5) Not available with DIN Process Connection codes D1, D2, or D3.
(6) Materials of Construction comply with metallurgical requirements within NACE MR0175/ISO for sour oil field production environments. Environmental limits apply to certain materials. Consult latest standard for details. Selected materials also conform to NACE MR0103 for sour refining environments.

A.7 Options

Standard configuration

Unless otherwise specified, transmitter is shipped as follows:

Engineering units ***Differential/Gage*:** ***Absolute/2051TA*:**	 inH_2O (Range 0, 1, 2, and 3) psi (Range 4 and 5) psi (all ranges)
Low Limit:	0 (engineering units above)
High Limit:	Upper range limit
Output:	Linear
Flange type:	Specified model code option
Flange material:	Specified model code option
O-ring material:	Specified model code option
Drain/vent:	Specified model code option
LCD Display:	Installed or none
Software tag:	(Blank)

Custom configuration

If Option Code C1 is ordered, the customer may have the factory pre-configure special parameters in the transmitter.

Refer to the "Rosemount 2051 Wireless Configuration Data Sheet" document number 00806-0100-4102.

Tagging (3 options available)

- Standard SST hardware tag is wired to the transmitter. Tag character height is 0.125 in. (3,18 mm), 56 characters maximum.
- Tag may be permanently stamped on transmitter nameplate upon request, 56 characters maximum.
- Tag may be stored in transmitter memory. Character limit is dependent on protocol.
  - WirelessHART: 32 characters

Optional Rosemount 304, 305, or 306 Integral Manifolds

Factory assembled to 2051C and 2051T transmitters. Refer to the following Product Data Sheet (document number 00813-0100-4839 for Rosemount 304 and 00813-0100-4733 for Rosemount 305 and 306) for additional information.

Other seals

Refer to Product Data Sheet 00813-0100-4016 for additional information.

Output information

Output range points must be the same unit of measure. Available units of measure include:

Pressure			
atm	inH_20@4 °C	g/cm^2	psi
mbar	mmH_2O	kg/cm^2	torr
bar	mmHg	Pa	cmH_20@4 °C
inH_20	mmH_20@4 °C	kPa	cmHG@0 °C
inHg	ftH_20	MPa	ftH_20@60 °F
hPa	inH_20@60 °F	kg/SqM	mH_20@4 °C
mHg@0 °C	Psf	ftH_2O@4C	

Display and interface options

Digital display option provides diagnostic messages for local troubleshooting and has 90 degree rotation capability for easy viewing.

M5 Digital Display

- 3-Line, 7-Digit LCD for wireless

Configuration buttons

The Rosemount 2051 Wireless transmitter comes with a Digital Zero trim installed with or without the LCD digital display.

Bolts for flanges and adapters

- Options permit bolts for flanges and adapters to be obtained in various materials
- Standard material is plated carbon steel per ASTM A449, Type 1 L4

Austenitic 316 Stainless Steel Bolts

L5 ASTM A 193, Grade B7M Bolts

L6 Alloy K-500 Bolts

Rosemount 2051C Coplanar Flange and 2051T bracket option

B4 Bracket for 2-in. Pipe or Panel Mounting

- For use with the standard Coplanar flange configuration
- Bracket for mounting of transmitter on 2-in. pipe or panel
- Stainless steel construction with stainless steel bolts

Rosemount 2051C Traditional Flange bracket options

B1 Bracket for 2-in. Pipe Mounting

- For use with the traditional flange option
- Bracket for mounting on 2-in. pipe
- Carbon steel construction with carbon steel bolts
- Coated with polyurethane paint B2

Bracket for Panel Mounting

- For use with the traditional flange option
- Bracket for mounting transmitter on wall or panel
- Carbon steel construction with carbon steel bolts
- Coated with polyurethane paint

B3 Flat Bracket for 2-in. Pipe Mounting

- For use with the traditional flange option
- Bracket for vertical mounting of transmitter on 2-in. pipe
- Carbon steel construction with carbon steel bolts
- Coated with polyurethane paint

B7 B1 Bracket with SST Bolts

- Same bracket as the B1 option with Series 300 stainless steel bolts B8

B2 Bracket with SST Bolts

- Same bracket as the B2 option with Series 300 stainless steel bolts

B9 B3 Bracket with SST Bolts

- Same bracket as the B3 option with Series 300 stainless steel bolts BA

Stainless Steel B1 Bracket with SST Bolts

- B1 bracket in stainless steel with Series 300 stainless steel bolts

BC Stainless Steel B3 Bracket with SST Bolts

- B3 bracket in stainless steel with Series 300 stainless steel bolts

A.8 Spare parts

Meter Kit	**02051-9020-0001**
Meter Cover	
O-ring, Silicone, #235	
grease, o-ring	
LCD Assembly	
Connector, 4-Position	
LCD Assembly Kit	**02051-9020-0002**
LCD Assembly	
Connector, 4-Position	
Meter Cover Assembly Kit	**02051-9020-0003**
Meter Cover	
O-ring, Silicone, #235	
grease, o-ring	
Standard Cover Assembly Kit	**02051-9021-0001**
Standard Cover	
O-ring, Silicone, #235	
grease, o-ring	
Main Cover O-ring	**02051-9021-0002**
O-ring, Silicone, #235	
Battery Compartment Cover Assy Kit	**00708-9050-0001**
Battery Compartment Cover Assy	
O-ring, Silicone, #134	
grease, o-ring	
Lock Ring Screw	**02051-9022-0001**
Screw (lock ring), Qty: 1	
Lock Ring Screw	**02051-9022-0002**
10 Screw	

Appendix B Product Certifications

Wireless Certifications . . . . . **page 131**

B.1 Wireless Certifications

B.1.1 Approved manufacturing locations

Rosemount Inc. — Chanhassen, Minnesota USA
Fisher-Rosemount GmbH & Co. — Wessling, Germany
Emerson Process Management Asia Pacific Private Limited — Singapore
Beijing Rosemount Far East Instrument Co., LTD — Beijing, China

B.1.2 European directive information

The most recent revision of the EC declaration of conformity can be found at www.rosemount.com.

B.1.3 Telecommunication compliance

All wireless devices require certification to ensure that they adhere to regulations regarding the use of the RF spectrum. Nearly every country requires this type of product certification. Emerson is working with governmental agencies around the world to supply fully compliant products and remove the risk of violating country directives or laws governing wireless device usage.

B.1.4 FCC and IC

C This device complies with part 15 of the FCC Rules. Operation is subject to the following two conditions: (1) This device may not cause harmful interference, and (2) this device must accept any interference received, including interference that may cause undesired operation

D

E IC This device contains license-exempt transmitter(s)/receiver(s) that comply with Innovation, Science and Economic Development Canada's license-exempt RSS(s). Operation is subject to the following two conditions: This device may not cause interference. This device must accept any interference, including interference that may cause undesired operation of the device

F IC Cet appareil contient des émetteurs / récepteurs exemptés de licence qui sont conformes aux RSS exempts de licence d'Innovation, Sciences et Développement économique Canada. Son fonctionnement est soumis aux deux conditions suivantes: Cet appareil ne doit pas provoquer d'interférences. Cet appareil doit accepter toute interférence, y compris les interférences pouvant entraîner un fonctionnement indésirable de l'appareil

.

F.1.1 Ordinary location certification for FM

As standard, the transmitter has been examined and tested to determine that the design meets basic electrical, mechanical, and fire protection requirements by FM, a nationally recognized testing laboratory (NRTL) as accredited by the Federal Occupational Safety and Health Administration (OSHA).

F.1.2 North American certifications

Factory Mutual (FM) approvals

I5 FM Intrinsically Safe
Certificate No: 3045342
Applicable Standards: Class 3600:2011, Class 3610:2010, Class 3810:2005
Markings: Intrinsically Safe for Class 1, Division 1, Groups A, B, C, D
Zone Marking: Class 1 Zone 0, AEx ia IIC
T4 (-40 °C to 70 °C)
Intrinsically Safe when installed according to Rosemount Drawing 03031-1062
Enclosure Type 4X / IP66 / 68

Specific Conditions for Safe Use:

1. The Model 2051 Wireless pressure Transmitter shall only be used with the 701PGNKF Rosemount Smartpower Battery Pack.

2. The inline pressure sensor may contain more than 10% aluminum and is considered a potential risk of ignition by impact or friction. Care must be taken into account during installation and use to prevent impact and friction.

3. The surface resistivity of the transmitter housing is greater than one gigaohm. To avoid electrostatic charge build-up, it must not be rubbed or cleaned with solvents or a dry cloth.

F.1.3 CSA - Canadian Standards Association

I6 CSA Intrinsically Safe
Certificate No: 2526009
Applicable Standards: CSA 22.2 No. 0-M91, CSA C22.2 No. 159-92
Markings: Intrinsically Safe For Class 1, Division 1, Groups A, B, C, D
T4 (-40 °C to 70 °C)
Intrinsically safe when installed according to Rosemount drawing 03031-1063
Enclosure Type 4X / IP66 / IP68

F.1.4 European certifications

I1 ATEX Intrinsic Safety
Certificate No.: Baseefa12ATEX0228X
Applicable Standards: EN60079-11:2012, EN60079-0:2012
Markings: Ex ia IIC T4 Ga (-40 °C ≤ Ta ≤ 70 °C)
Ⓔx II 1G
IP66 / 68
CE 1180

Special Conditions for Safe Use (X)

The plastic enclosure may constitute a potential electrostatic ignition risk and must not be rubbed or cleaned with a dry cloth.

For use with Rosemount 701PGNKF only.

I7 IECEx Intrinsic Safety
Certificate No: IECEx BAS 12.0124X
Applicable Standards: IEC60079-11:2011, IEC60079-0:2011
Markings: Ex ia IIC T4 Ga (-40 °C ≤ Ta ≤ 70 °C)
IP66/68

Special Conditions for Safe Use (X)

The plastic enclosure may constitute a potential electrostatic ignition risk and must not be rubbed or cleaned with a dry cloth.

For use with Rosemount 701PGNFK only.

注意！

依據　低功率電波輻射性電機管理辦法
第十二條
　　經型式認證合格之低功率射頻電機，非經許可，公司、商號或使用者均不得擅自變更頻率、加大功率或變更原設計之特性及功能。
第十四條
　　低功率射頻電機之使用不得影響飛航安全及干擾合法通信；經發現有干擾現象時，應立即停用，並改善至無干擾時方得繼續使用。
　　前項合法通信，指依電信法規定作業之無線電通信。

低功率射頻電機須忍受合法通信或工業、科學及醫療用電波輻射性電機設備之干擾。

Appendix C Field Communicator Menu Trees and Fast Keys

Field Communicator menu trees . . . . . **page 135**

C.1 Field Communicator menu trees

Figure C-1. Rosemount 2051 Field Communicator menu tree: Overview

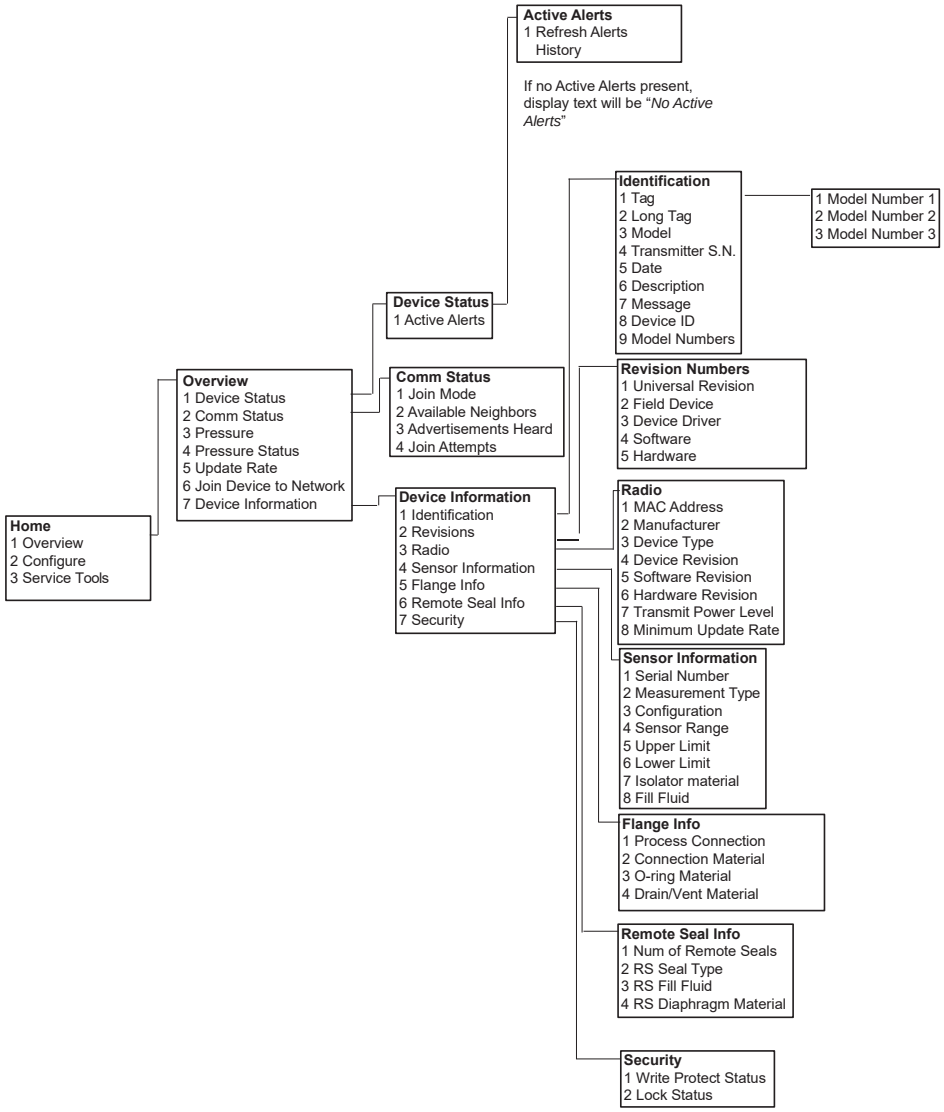

Figure C-2. Rosemount 2051 Field Communicator menu tree: Configure

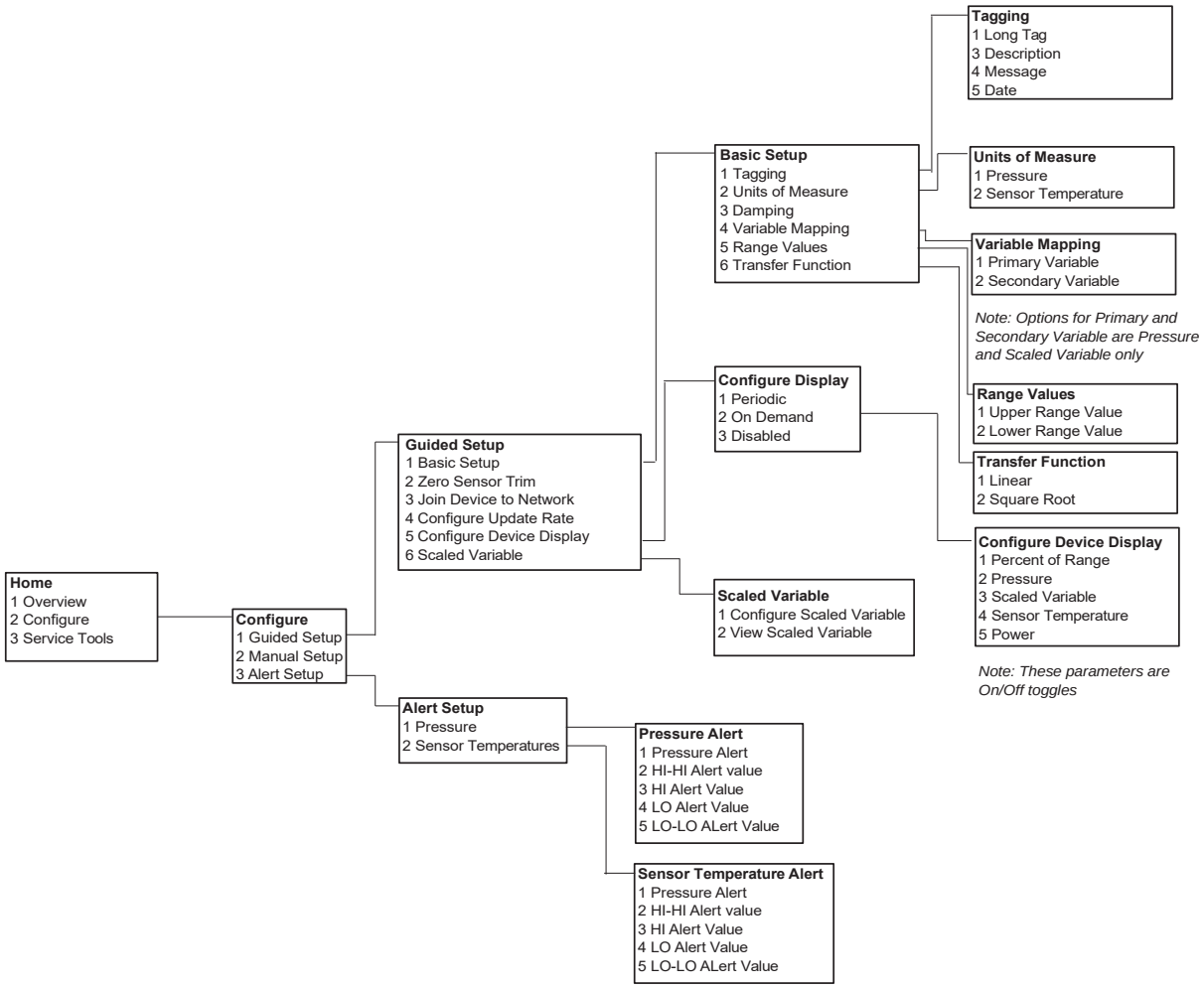

Figure C-3. Rosemount 2051 Field Communicator menu tree: Manual Setup

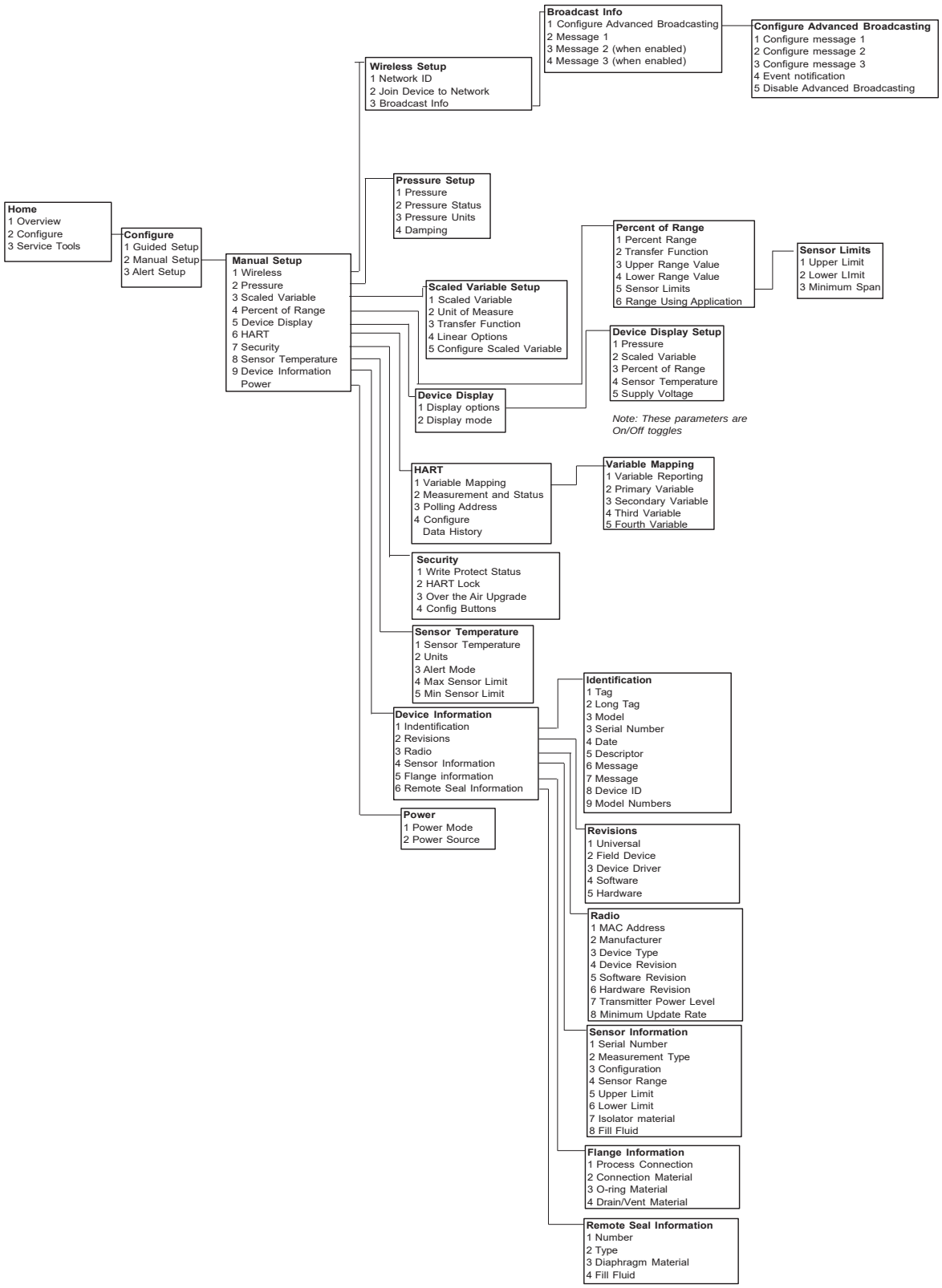

Figure C-4. Rosemount 2051 Field Communicator menu tree: Manual Setup

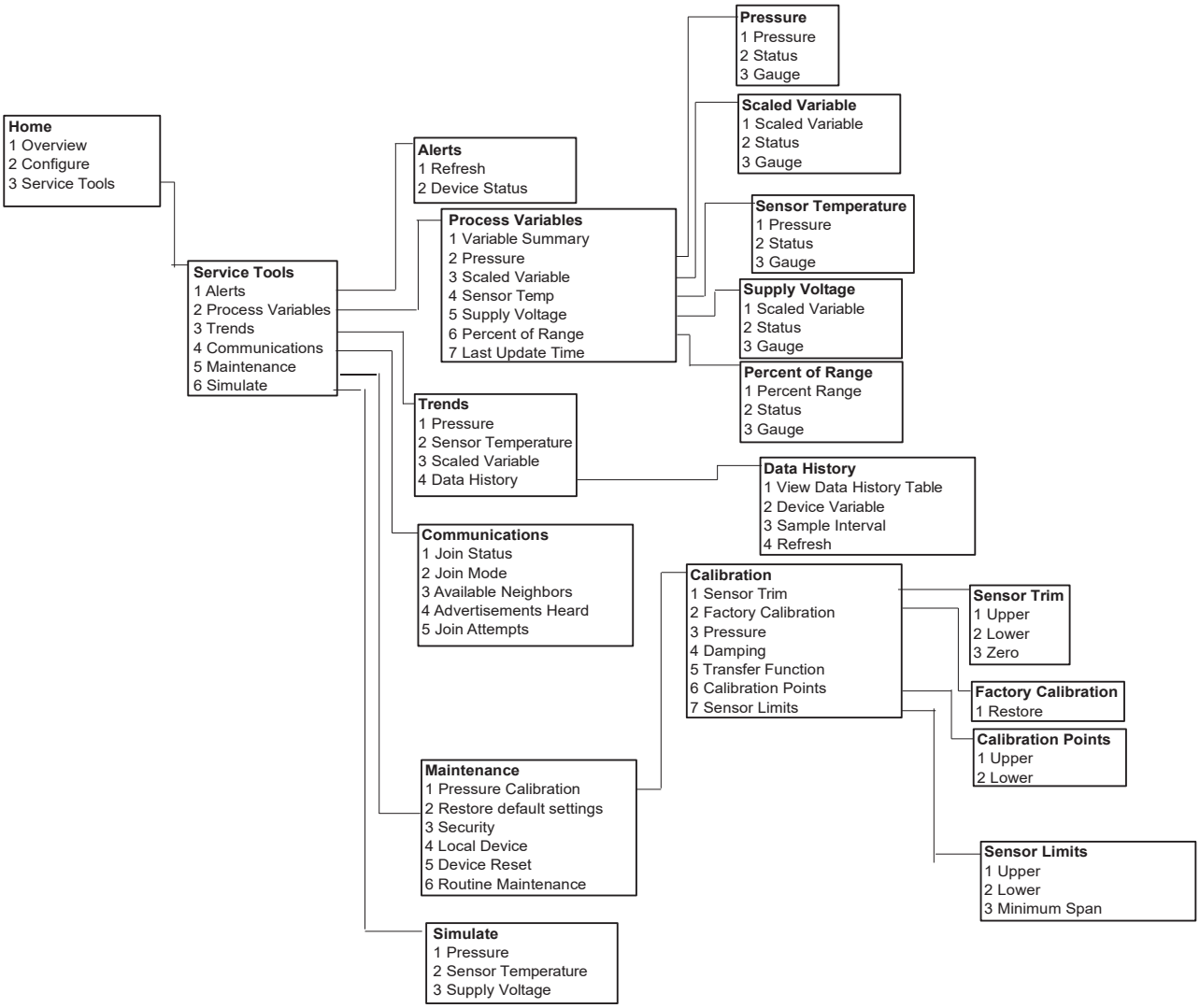

Appendix D Network design best practices

Effective range . . . . . **page 139**

All recommended practices should be followed to ensure highest data reliability. Deviation from these best practices may require device repeaters in the network to maintain 99% data reliability. The following are guidelines to achieve the best possible Smart Wireless Network.

1. Each wireless network field should be scoped to a single process unit.
2. Minimize the number of hops to the Gateway in order to reduce latency. A minimum of five wireless instruments should be within effective range of the Smart Wireless Gateway.
3. Each device in the network should have at minimum three devices with potential communication paths. A mesh network gets its reliability from multiple communication pathways. Ensuring each device has multiple neighbors within range will result in the most reliable network.
4. Have 25 percent of wireless instruments in the network within range of Smart Wireless Gateway. Other enhancing modifications include creating a higher percentage of devices within effective range of the gateway to 35 percent or more. This clusters more devices around the gateway and ensures fewer hops and more bandwidth available to *Wireless*HART devices with fast scan rates.
5. Effective range is determined by type of process unit and the density of the infrastructure that surrounds the network.

D.1 Effective range

Heavy Obstruction: 100 ft. (30 m). Typical heavy density plant environment. Cannot drive a truck or equipment through.

Medium Obstruction: 250 ft. (76 m). Typical light process areas, lots of space between equipment and infrastructure.

Light Obstruction: 500 ft. (152 m). Typical of tank farms. Despite tanks being big obstructions themselves, lots of space between and above makes for good RF propagation.

Line of Sight: 750 ft. (230 m). No obstructions between *Wireless*HART devices and devices mounted a minimum of 6 ft. (2 m) above ground or obstructions.

For examples and complete explanations, refer to the IEC62591 *Wireless*HART System Engineering Guide:

http://www2.emersonprocess.com/siteadmincenter/PM%20Central%20Web%20Documents/EMR_WirelessHART_SysEngGuide.pdf

Standard Terms and Conditions of Sale can be found at www.rosemount.com/terms_of_sale
The Emerson logo is a trademark and service mark of Emerson Electric Co.
Rosemount. the Rosemount logotype, and SMART FAMILY are registered trademarks of Rosemount Inc.
Coplanar is a trademark of Rosemount Inc.
Halocarbon is a trademark of the Halocarbon Products Corporation.o.
Fluorinert is a registered trademark of Minnesota Mining and Manufacturing Company Corporation
Syltherm 800 and D.C. 200 are registered trademarks of Dow Corning Corporation.
Neobee M-20 is a registered trademark of PVO International, Inc.
HART is a registered trademark of the HART Communication Foundation.
Foundation fieldbus is a registered trademark of the Fieldbus Foundation.
All other marks are the property of their respective owners.

© May 2013 Rosemount, Inc. All rights reserved.

Emerson Process Management
Rosemount Measurement
8200 Market Boulevard
Chanhassen MN 55317 USA
Tel (USA) 1 800 999 9307
Tel (International) +1 952 906 8888
Fax +1 952 906 8889

Emerson Process Management
GmbH & Co.
Argelsrieder Feld 3
82234 Wessling
Germany
Tel 49 (8153) 9390
Fax 49 (8153) 939172

Emerson Process Management Asia
Pacific Private Limited
1 Pandan Crescent
Singapore 128461
T (65) 6777 8211
F (65) 6777 0947
Enquiries@AP.EmersonProcess.com

Beijing Rosemount Far East
Instrument Co., Limited
No. 6 North Street,
Hepingli, Dong Cheng District
Beijing 100013, China
T (86) (10) 6428 2233
F (86) (10) 6422 8586

Emerson Process Management
Latin America
1300 Concord Terrace, Suite 400
Sunrise Florida 33323 USA
Tel + 1 954 846 5030

ROSEMOUNT®

EMERSON.
Process Management