owner.ford.com

ford.ca

May 2015
First Printing
Owner's Manual
Fiesta
Litho in U.S.A.

GE8J 19A321 AA

FIESTA

FSC
MIX
Paper
FSC® C102270

2016 FIESTA Owner's Manual

Information Provided by:
DEALER E-PROCESS

The information contained in this publication was correct at the time of going to print. In the interest of continuous development, we reserve the right to change specifications, design or equipment at any time without notice or obligation. No part of this publication may be reproduced, transmitted, stored in a retrieval system or translated into any language in any form by any means without our written permission. Errors and omissions excepted.

© Ford Motor Company 2015

All rights reserved.

Part Number: 20150504145621

Information Provided by:
DEALER E-PROCESS

Information Provided by:
DEALER
E-PROCESS

Table of Contents

Introduction
About This Manual....7
Symbols Glossary....7
Data Recording....9
California Proposition 65....11
Perchlorate....11
Ford Credit....11
Replacement Parts Recommendation....11
Special Notices....12
Mobile Communications Equipment....12
Export Unique Options....13

Environment
Protecting the Environment....14

Child Safety
General Information....15
Installing Child Seats....16
Booster Seats....22
Child Seat Positioning....24
Child Safety Locks....26

Safety Belts
Principle of Operation....28
Fastening the Safety Belts....29
Safety Belt Height Adjustment....31
Safety Belt Warning Lamp and Indicator Chime....32
Safety Belt Minder....32
Child Restraint and Safety Belt Maintenance....34

Personal Safety System™
Personal Safety System™....35

Supplementary Restraints System
Principle of Operation....36
Driver and Passenger Airbags....37
Front Passenger Sensing System....38
Side Airbags....40
Driver Knee Airbag....41
Side Curtain Airbags....42
Crash Sensors and Airbag Indicator....43
Airbag Disposal....44

Keys and Remote Controls
General Information on Radio Frequencies....45
Remote Control....45
Replacing a Lost Key or Remote Control....49

MyKey™
Principle of Operation....50
Creating a MyKey....51
Clearing All MyKeys....51
Checking MyKey System Status....53
Using MyKey With Remote Start Systems....53
MyKey Troubleshooting....53

Locks
Locking and Unlocking....55
Manual Liftgate....58
Keyless Entry....59
Interior Luggage Compartment Release....61

Security
Passive Anti-Theft System....63
Anti-Theft Alarm....64

Steering Wheel
Adjusting the Steering Wheel....66
Audio Control....66
Voice Control....67
Cruise Control....67

Information Provided by: DEALER E-PROCESS

Table of Contents

Wipers and Washers
Windshield Wipers.....68
Windshield Washers.....68
Rear Window Wiper and Washers.....69

Lighting
General Information.....70
Lighting Control.....70
Autolamps.....71
Instrument Lighting Dimmer.....72
Headlamp Exit Delay.....72
Daytime Running Lamps.....72
Front Fog Lamps.....73
Direction Indicators.....73
Interior Lamps.....73
Ambient Lighting.....74

Windows and Mirrors
Power Windows.....75
Exterior Mirrors.....76
Interior Mirror.....77
Moonroof.....78

Instrument Cluster
Gauges.....79
Warning Lamps and Indicators.....80
Audible Warnings and Indicators.....83

Information Displays
General Information.....84
Clock.....87
Trip Computer.....87
Personalized Settings.....88
Information Messages.....88

Climate Control
Manual Climate Control.....96
Automatic Climate Control.....97
Hints on Controlling the Interior Climate.....98
Heated Windows and Mirrors.....101
Cabin Air Filter.....101

Seats
Sitting in the Correct Position.....103
Head Restraints.....103
Manual Seats.....105
Rear Seats.....106
Heated Seats.....107

Auxiliary Power Points
Auxiliary Power Points.....109
Cigar Lighter.....109

Storage Compartments
Center Console.....110
Overhead Console.....110

Starting and Stopping the Engine
General Information.....111
Ignition Switch.....111
Keyless Starting.....111
Starting a Gasoline Engine.....113
Switching Off the Engine.....114
Engine Block Heater.....114

Fuel and Refueling
Safety Precautions.....116
Fuel Quality - Gasoline.....117
Running Out of Fuel.....117
Refueling.....118
Fuel Consumption.....119
Emission Control System.....120

Transmission
Manual Transmission - 1.0L EcoBoost™/ 1.6L Duratec-16V Ti-VCT (Sigma).....123

Information Provided by: DEALER E-PROCESS

Table of Contents

Manual Transmission - 1.6L EcoBoost™ 124
Automatic Transmission....126
Hill Start Assist....129

Brakes

General Information....131
Hints on Driving With Anti-Lock Brakes....131
Parking Brake....132

Traction Control

Principle of Operation....133
Using Traction Control....133

Stability Control

Principle of Operation....134
Using Stability Control - 1.0L EcoBoost™/1.6L Duratec-16V Ti-VCT (Sigma)....135
Using Stability Control - 1.6L EcoBoost™....135

Parking Aids

Principle of Operation....136
Parking Aid....136
Rear View Camera....138

Cruise Control

Principle of Operation....140
Using Cruise Control....140

Driving Aids

Steering....142

Load Carrying

Rear Under Floor Storage....143
Cargo Nets....143
Luggage Covers....143
Load Limit....144

Towing

Towing a Trailer....151
Transporting the Vehicle....151
Towing the Vehicle on Four Wheels....151

Driving Hints

Breaking-In....154
Economical Driving....154
Driving Through Water....154
Floor Mats....155

Roadside Emergencies

Roadside Assistance....157
Hazard Warning Flashers....158
Fuel Shutoff....158
Jump Starting the Vehicle....159

Customer Assistance

Getting the Services You Need....162
In California (U.S. Only)....163
The Better Business Bureau (BBB) Auto Line Program (U.S. Only)....164
Utilizing the Mediation/Arbitration Program (Canada Only)....164
Getting Assistance Outside the U.S. and Canada....165
Ordering Additional Owner's Literature....166
Reporting Safety Defects (U.S. Only)....166
Reporting Safety Defects (Canada Only)....167

Fuses

Fuse Specification Chart....168
Changing a Fuse....176

Maintenance

General Information....177
Opening and Closing the Hood....177

Information Provided by: DEALER E-PROCESS

Fiesta (CCT) Canada/United States of America, enUSA, First Printing

Table of Contents

Under Hood Overview - 1.0L EcoBoost™ 179
Under Hood Overview - 1.6L Duratec-16V Ti-VCT (Sigma) 180
Under Hood Overview - 1.6L EcoBoost™ 181
Engine Oil Dipstick - 1.0L EcoBoost™ 182
Engine Oil Dipstick - 1.6L Duratec-16V Ti-VCT (Sigma) 182
Engine Oil Dipstick - 1.6L EcoBoost™ 182
Engine Oil Check 182
Oil Change Indicator Reset 183
Engine Coolant Check 184
Automatic Transmission Fluid Check 186
Brake Fluid Check 186
Power Steering Fluid Check 186
Washer Fluid Check 186
Fuel Filter 186
Changing the 12V Battery 186
Checking the Wiper Blades 187
Changing the Wiper Blades 187
Adjusting the Headlamps 187
Removing a Headlamp 189
Changing a Bulb - 4-Door 189
Changing a Bulb - 5-Door 195
Bulb Specification Chart 200
Changing the Engine Air Filter 201

Vehicle Care

Cleaning Products 203
Cleaning the Exterior 203
Waxing 204
Cleaning the Engine 204
Cleaning the Windows and Wiper Blades 205
Cleaning the Interior 205
Cleaning the Instrument Panel and Instrument Cluster Lens 206
Cleaning Leather Seats 206
Repairing Minor Paint Damage 207
Cleaning the Alloy Wheels 207
Vehicle Storage 207

Wheels and Tires

General Information 210
Tire Care 210
Using Summer Tires 225
Using Winter Tires 225
Using Snow Chains 225
Tire Pressure Monitoring System 225
Changing a Road Wheel 229
Technical Specifications 233

Capacities and Specifications

Engine Specifications 234
Motorcraft Parts 235
Vehicle Identification Number 236
Vehicle Certification Label 237
Transmission Code Designation 237
Capacities and Specifications - 1.0L EcoBoost™ 238
Capacities and Specifications - 1.6L EcoBoost™ 241
Capacities and Specifications - 1.6L Duratec-16V Ti-VCT (Sigma) 244

Audio System

General Information 248
Audio Unit - Vehicles With: AM/FM/CD 249
Audio Unit - Vehicles With: AM/FM/CD/SYNC 253
Audio Unit - Vehicles With: Touchscreen Display 257
Audio Unit - Vehicles With: Sony Audio System/Touchscreen Display 258
Digital Radio 260
Satellite Radio 262

Information Provided by: DEALER E-PROCESS

Audio Input Jack.....265
USB Port.....266
Media Hub.....266

SYNC™

General Information.....267
Using Voice Recognition.....269
Using SYNC™ With Your Phone.....272
SYNC™ Applications and Services.....284
SYNC™ AppLink™.....292
Using SYNC™ With Your Media Player.....293
SYNC™ Troubleshooting.....303

Accessories

Accessories.....312

Extended Service Plan (ESP)

Extended Service Plan (ESP).....314

Scheduled Maintenance

General Maintenance Information.....316
Normal Scheduled Maintenance.....319
Special Operating Conditions Scheduled Maintenance.....322
Scheduled Maintenance Record.....324

Appendices

End User License Agreement.....334

Information Provided by:
DEALER E-PROCESS

Information Provided by:
DEALER E-PROCESS

ABOUT THIS MANUAL

Thank you for choosing Ford. We recommend that you take some time to get to know your vehicle by reading this manual. The more that you know about your vehicle, the greater the safety and pleasure you will get from driving it.

WARNING

Driving while distracted can result in loss of vehicle control, crash and injury. We strongly recommend that you use extreme caution when using any device that may take your focus off the road. Your primary responsibility is the safe operation of your vehicle. We recommend against the use of any hand-held device while driving and encourage the use of voice-operated systems when possible. Make sure you are aware of all applicable local laws that may affect the use of electronic devices while driving.

Note: *This manual describes product features and options available throughout the range of available models, sometimes even before they are generally available. It may describe options not fitted to the vehicle you have purchased.*

Note: *Some of the illustrations in this manual may show features as used in different models, so they may appear different to you on your vehicle.*

Note: *Always use and operate your vehicle in line with all applicable laws and regulations.*

Note: *Pass on this manual when selling your vehicle. It is an integral part of your vehicle.*

This manual may qualify the location of a component as left-hand side or right-hand side. The side is determined when facing forward in the seat.

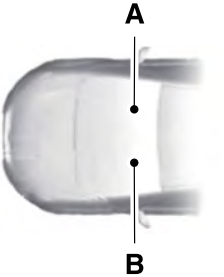

E154903

A Right-hand side.

B Left-hand side.

SYMBOLS GLOSSARY

These are some of the symbols you may see on your vehicle.

Safety alert

See Owner's Manual

Air conditioning system

Anti-lock braking system

Avoid smoking, flames or sparks

Battery

Battery acid

Brake fluid - non petroleum based

Information Provided by:
DEALER E-PROCESS

Brake system

Cabin air filter

Check fuel cap

Child safety door lock or unlock

Child seat lower anchor

Child seat tether anchor

Cruise control

Do not open when hot

Engine air filter

Engine coolant

Engine coolant temperature

Engine oil

Explosive gas

Fan warning

Fasten safety belt

Front airbag

Front fog lamps

Fuel pump reset

Fuse compartment

Hazard warning flashers

Heated rear window

Heated windshield

Interior luggage compartment release

Jack

Keep out of reach of children

Lighting control

Low tire pressure warning

Maintain correct fluid level

Note operating instructions

Panic alarm

Information Provided by:
DEALER E-PROCESS

Parking aid

Parking brake

Power steering fluid

Power windows front/rear

Power window lockout

Service engine soon

Side airbag

Shield the eyes

Stability control

Windshield wash and wipe

DATA RECORDING

Service Data Recording

Service data recorders in your vehicle are capable of collecting and storing diagnostic information about your vehicle. This potentially includes information about the performance or status of various systems and modules in the vehicle, such as engine, throttle, steering or brake systems. In order to properly diagnose and service your vehicle, Ford Motor Company, Ford of Canada, and service and repair facilities may access or share among them vehicle diagnostic information received through a direct connection to your vehicle when diagnosing or servicing your vehicle. Additionally, when your vehicle is in for service or repair, Ford Motor Company, Ford of Canada, and service and repair facilities may access or share among them data for vehicle improvement purposes. For U.S. only (if equipped), if you choose to use the SYNC Vehicle Health Report, you consent that certain diagnostic information may also be accessed electronically by Ford Motor Company and Ford authorized service facilities, and that the diagnostic information may be used for any purpose. See **SYNC™** (page 267).

Event Data Recording

This vehicle is equipped with an event data recorder. The main purpose of an event data recorder is to record, in certain crash or near crash-like situations, such as an airbag deployment or hitting a road obstacle; this data will assist in understanding how a vehicle's systems performed. The event data recorder is designed to record data related to vehicle dynamics and safety systems for a short period of time, typically 30 seconds or less.

The event data recorder in this vehicle is designed to record such data as:

- **How various systems in your vehicle were operating;**
- **Whether or not the driver and passenger safety belts were buckled/fastened;**
- **How far (if at all) the driver was depressing the accelerator and/or the brake pedal; and**
- **How fast the vehicle was traveling; and**
- **Where the driver was positioning the steering wheel.**

Information Provided by: DEALER E-PROCESS

This data can help provide a better understanding of the circumstances in which crashes and injuries occur.

Note: *Event data recorder data is recorded by your vehicle only if a non-trivial crash situation occurs; no data is recorded by the event data recorder under normal driving conditions and no personal data or information (e.g., name, gender, age, and crash location) is recorded (see limitations regarding 911 Assist and Traffic, directions and Information privacy below). However, parties, such as law enforcement, could combine the event data recorder data with the type of personally identifying data routinely acquired during a crash investigation.*

To read data recorded by an event data recorder, special equipment is required, and access to the vehicle or the event data recorder is needed. In addition to the vehicle manufacturer, other parties, such as law enforcement, that have such special equipment, can read the information if they have access to the vehicle or the event data recorder. Ford Motor Company and Ford of Canada do not access event data recorder information without obtaining consent, unless pursuant to court order or where required by law enforcement, other government authorities or other third parties acting with lawful authority. Other parties may seek to access the information independently of Ford Motor Company and Ford of Canada.

Note: *Including to the extent that any law pertaining to Event Data Recorders applies to SYNC or its features, please note the following: Once 911 Assist (if equipped) is enabled (set ON), 911 Assist may, through any paired and connected cell phone, disclose to emergency services that the vehicle has been in a crash involving the deployment of an airbag or, in certain vehicles, the activation of the fuel pump shut-off. Certain versions or updates to 911 Assist may also be capable of being used to electronically or verbally provide to 911 operators the vehicle location (such as latitude and longitude), and/or other details about the vehicle or crash or personal information about the occupants to assist 911 operators to provide the most appropriate emergency services. If you do not want to disclose this information, do not activate the 911 Assist feature.* See **SYNC™** *(page 267).*

Additionally, when you connect to Traffic, Directions and Information (if equipped, U.S. only), the service uses GPS technology and advanced vehicle sensors to collect the vehicle's current location, travel direction, and speed ("vehicle travel information"), only to help provide you with the directions, traffic reports, or business searches that you request. If you do not want Ford or its vendors to receive this information, do not activate the service. For more information, see Traffic, Directions and Information, Terms and Conditions. See **SYNC™** (page 267).

Information Provided by:
DEALER E-PROCESS

CALIFORNIA PROPOSITION 65

WARNING

Some constituents of engine exhaust, certain vehicle components, certain fluids contained in vehicles and certain products of component wear contain or emit chemicals known to the State of California to cause cancer and birth defects or other reproductive harm.

PERCHLORATE

Certain components in your vehicle such as airbag modules, safety belt pretensioners and remote control batteries may contain perchlorate material. Special handling may apply for service or vehicle end of life disposal.

For more information visit:

Web Address
www.dtsc.ca.gov/hazardouswaste/perchlorate

FORD CREDIT

(U.S. Only)

Ford Credit offers a full range of financing and lease plans to help you acquire your vehicle. If you have financed or leased your vehicle through Ford Credit, thank you for your business.

For your convenience we offer a number of ways to contact us, as well as to help manage your account.

Phone: 1-800-727-7000

For more information regarding Ford Credit, as well as to access Account Manager, please go to www.fordcredit.com.

REPLACEMENT PARTS RECOMMENDATION

Your vehicle has been built to the highest standards using quality parts. We recommend that you demand the use of genuine Ford and Motorcraft parts whenever your vehicle requires scheduled maintenance or repair. You can clearly identify genuine Ford and Motorcraft parts by looking for the Ford, FoMoCo or Motorcraft branding on the parts or their packaging.

Scheduled Maintenance and Mechanical Repairs

One of the best ways for you to make sure that your vehicle provides years of service is to have it maintained in line with our recommendations using parts that conform to the specifications detailed in this Owner's Manual. Genuine Ford and Motorcraft parts meet or exceed these specifications.

Collision Repairs

We hope that you never experience a collision, but accidents do happen. Genuine Ford replacement collision parts meet our stringent requirements for fit, finish, structural integrity, corrosion protection and dent resistance. During vehicle development we validate these parts deliver the intended level of protection as a whole system. A great way to know for sure you are getting this level of protection is to use genuine Ford replacement collision parts.

Information Provided by: DEALER E-PROCESS

Warranty on Replacement Parts

Genuine Ford and Motorcraft replacement parts are the only replacement parts that benefit from a Ford Warranty. Damage caused to your vehicle as a result of the failure of non-Ford parts may not be covered by the Ford Warranty. For additional information, refer to the terms and conditions of the Ford Warranty.

SPECIAL NOTICES

New Vehicle Limited Warranty

For a detailed description of what is covered and what is not covered by your vehicle's New Vehicle Limited Warranty, refer to the Warranty Manual that is provided to you along with your Owner's Manual.

Special Instructions

For your added safety, your vehicle is fitted with sophisticated electronic controls.

WARNINGS

You risk death or serious injury to yourself and others if you do not follow the instruction highlighted by the warning symbol. Failure to follow the specific warnings and instructions could result in personal injury.

Front seat mounted rear-facing child or infant seats should **NEVER** be placed in front of an active passenger airbag.

On-board Diagnostics (OBD-II)

Your vehicle's On-board Diagnostics (OBD-II) system has a data port for diagnostics, repair and reprogramming services with diagnostic scan tools. Installing a non-Ford-approved aftermarket OBD plug-in device that uses the port during normal driving, for example remote insurance company monitoring, remote vehicle diagnostics, telematics or engine reprogramming, may cause interference or damage to vehicle systems. We do not recommend or endorse the use of any non-Ford-approved aftermarket OBD plug-in devices. The vehicle Warranty may not cover damage caused by any non-Ford-approved aftermarket OBD plug-in device.

MOBILE COMMUNICATIONS EQUIPMENT

Using mobile communications equipment is becoming increasingly important in the conduct of business and personal affairs. However, you must not compromise your own or others' safety when using such equipment. Mobile communications can enhance personal safety and security when appropriately used, particularly in emergency situations. Safety must be paramount when using mobile communications equipment to avoid negating these benefits. Mobile communication equipment includes, but is not limited to, cellular phones, pagers, portable email devices, text messaging devices and portable two-way radios.

WARNING

Driving while distracted can result in loss of vehicle control, crash and injury. We strongly recommend that you use extreme caution when using any device that may take your focus off the road. Your primary responsibility is the safe operation of your vehicle. We recommend against the use of any hand-held device while driving and encourage the use of voice-operated systems when possible. Make sure you are aware of all applicable local laws that may affect the use of electronic devices while driving.

Information Provided by: DEALER E-PROCESS

EXPORT UNIQUE OPTIONS

For your particular global region, your vehicle may be equipped with features and options that are different from the features and options that are described in this Owner's Manual. A market unique supplement may be supplied that complements this book. By referring to the market unique supplement, if provided, you can properly identify those features, recommendations and specifications that are unique to your vehicle. This Owner's Manual is written primarily for the U.S. and Canadian Markets. Features or equipment listed as standard may be different on units built for Export. **Refer to this Owner's Manual for all other required information and warnings.**

Information Provided by:
DEALER E-PROCESS

PROTECTING THE ENVIRONMENT

You must play your part in protecting the environment. Correct vehicle usage and the authorized disposal of waste, cleaning and lubrication materials are significant steps toward this aim.

Information Provided by:
DEALER E-PROCESS

GENERAL INFORMATION

See the following sections for directions on how to properly use safety restraints for children.

WARNINGS

Always make sure your child is secured properly in a device that is appropriate for their height, age and weight. Child safety restraints must be bought separately from your vehicle. Failure to follow these instructions and guidelines may result in an increased risk of serious injury or death to your child.

All children are shaped differently. The recommendations for safety restraints are based on probable child height, age and weight thresholds from National Highway Traffic Safety Administration and other safety organizations, or are the minimum requirements of law. Ford recommends checking with a NHTSA Certified Child Passenger Safety Technician (CPST) and consult your pediatrician to make sure your child seat is appropriate for your child, and

WARNINGS

is compatible with and properly installed in your vehicle. To locate a child seat fitting station and CPST, contact the NHTSA toll free at 1-888-327-4236 or go to http://www.nhtsa.dot.gov. In Canada, check with your local St. John Ambulance office for referral to a CPST or for further information, contact your provincial ministry of transportation, locate your local St. John Ambulance office by searching for St. John Ambulance on the internet, or Transport Canada at 1-800-333-0371 (http://www.tc.gc.ca). Failure to properly restrain children in safety seats made especially for their height, age, and weight may result in an increased risk of serious injury or death to your child.

Do not leave children or animals unattended in the vehicle. On hot days, the temperature in the trunk or vehicle interior can rise very quickly. Exposure of people or animals to these high temperatures for even a short time can cause death or serious heat-related injuries, including brain damage. Small children are particularly at risk.

Information Provided by:
DEALER E-PROCESS

Recommendations for Safety Restraints for Children

Child	Child size, height, weight, or age	Recommended restraint type
Infants or toddlers	Children weighing 40 lb (18 kg) or less (generally age four or younger).	Use a child safety seat (sometimes called an infant carrier, convertible seat, or toddler seat).
Small children	Children who have outgrown or no longer properly fit in a child safety seat (generally children who are less than 4 ft. 9 in. (1.45 m) tall, are greater than age four and less than age 12, and between 40 lb (18 kg) and 80 lb (36 kg) and upward to 100 lb (45 kg) if recommended by your child restraint manufacturer).	Use a belt-positioning booster seat.
Larger children	Children who have outgrown or no longer properly fit in a belt-positioning booster seat (generally children who are at least 4 ft. 9 in. (1.45 m) tall or greater than 80 lb (36 kg) or 100 lb (45 kg) if recommended by child restraint manufacturer).	Use a vehicle safety belt having the lap belt snug and low across the hips, shoulder belt centered across the shoulder and chest, and seat back upright.

- You are required by law to properly use safety seats for infants and toddlers in the United States and Canada.
- Many states and provinces require that small children use approved booster seats until they reach age eight, a height of 4 feet 9 inches (1.45 meters) tall, or 80 pounds (36 kilograms). Check your local and state or provincial laws for specific requirements about the safety of children in your vehicle.
- When possible, always properly restrain children 12 years of age and under in a rear seating position of your vehicle. Accident statistics suggest that children are safer when properly restrained in the rear seating positions than in a front seating position. See **Front Passenger Sensing System** (page 38).

INSTALLING CHILD SEATS

Child Seats

E142594

Information Provided by: DEALER E-PROCESS

Use a child safety seat (sometimes called an infant carrier, convertible seat, or toddler seat) for infants, toddlers, or children weighing 40 pounds (18 kilograms) or less (generally age four or younger).

Using Lap and Shoulder Belts

WARNINGS

Airbags can kill or injure a child in a child seat. NEVER place a rear-facing child seat in front of an active airbag. If you must use a forward-facing child seat in the front seat, move the seat all the way back.

Children 12 and under should be properly restrained in the rear seat whenever possible.

Depending on where you secure a child restraint, and depending on the child restraint design, you may block access to certain safety belt buckle assemblies and LATCH lower anchors, rendering those features potentially unusable. To avoid risk of injury, occupants should only use seating positions where they are able to be properly restrained.

When installing a child safety seat with combination lap and shoulder belts:

- Use the correct safety belt buckle for that seating position.
- Insert the belt tongue into the proper buckle until you hear a snap and feel it latch. Make sure the tongue is securely fastened in the buckle.
- Keep the buckle release button pointing up and away from the safety seat, with the tongue between the child seat and the release button, to prevent accidental unbuckling.
- Place your vehicle seat back in the upright position.
- Put the safety belt in the automatic locking mode. See Step 5. This vehicle does not require the use of a locking clip.

Perform the following steps when installing the child seat with combination lap and shoulder belts:

Note: *Although the child seat illustrated is a forward facing child seat, the steps are the same for installing a rear facing child seat.*

E142528

1. Position the child safety seat in a seat with a combination lap and shoulder belt.

E142529

2. Pull down on the shoulder belt and then grasp the shoulder belt and lap belt together.

Information Provided by:
DEALER E-PROCESS

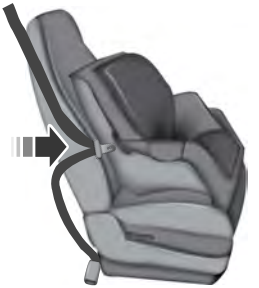

E142530

3. While holding the shoulder and lap belt portions together, route the tongue through the child seat according to the child seat manufacturer's instructions. Be sure the belt webbing is not twisted.

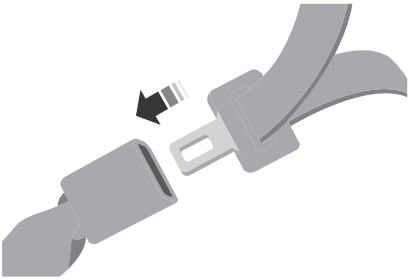

E142531

4. Insert the belt tongue into the proper buckle (the buckle closest to the direction the tongue is coming from) for that seating position until you hear a snap and feel the latch engage. Make sure the tongue is latched securely by pulling on it.

E142875

5. To put the retractor in the automatic locking mode, grasp the shoulder portion of the belt and pull downward until all of the belt is pulled out.

Note: *The automatic locking mode is available on the front passenger and rear seats. This vehicle does not require the use of a locking clip.*

6. Allow the belt to retract to remove slack. The belt will click as it retracts to indicate it is in the automatic locking mode.
7. Try to pull the belt out of the retractor to make sure the retractor is in the automatic locking mode (you should not be able to pull more belt out). If the retractor is not locked, unbuckle the belt and repeat Steps 5 and 6.

E142533

Information Provided by:
DEALER E-PROCESS

8. Remove remaining slack from the belt. Force the seat down with extra weight, e.g., by pressing down or kneeling on the child restraint while pulling up on the shoulder belt in order to force slack from the belt. This is necessary to remove the remaining slack that will exist once the extra weight of the child is added to the child restraint. It also helps to achieve the proper snugness of the child seat to your vehicle. Sometimes, a slight lean toward the buckle will additionally help to remove remaining slack from the belt.
9. Attach the tether strap (if the child seat is equipped). See **Using Tether Straps** later in this section.

E142534

10. Before placing the child in the seat, forcibly move the seat forward and back to make sure the seat is securely held in place. To check this, grab the seat at the belt path and attempt to move it side to side and forward and back. There should be no more than 1 inch (2.5 centimeters) of movement for proper installation.

Ford recommends checking with a NHTSA Certified Child Passenger Safety Technician (CPST) to make certain the child restraint is properly installed. In Canada, check with your local St. John Ambulance office for referral to a Certified Passenger Seat Technician.

Using Lower Anchors and Tethers for Children (LATCH)

WARNINGS

Never attach two child safety seats to the same anchor. In a crash, one anchor may not be strong enough to hold two child safety seat attachments and may break, causing serious injury or death.

Depending on where you secure a child restraint, and depending on the child restraint design, you may block access to certain safety belt buckle assemblies or LATCH lower anchors, rendering those features potentially unusable. To avoid risk of injury, occupants should only use seating positions where they are able to be properly restrained.

The LATCH system is composed of three vehicle anchor points: two lower anchors located where your vehicle seat back and seat cushion meet (called the seat bight) and one top tether anchor located behind that seating position.

LATCH compatible child safety seats have two rigid or webbing mounted attachments that connect to the two lower anchors at the LATCH equipped seating positions in your vehicle. This type of attachment method eliminates the need to use safety belts to attach the child seat, however the safety belt can still be used to attach the child seat. For forward-facing child seats, the top tether strap must also be attached to the proper top tether anchor, if a top tether strap has been provided with your child seat.

Information Provided by: DEALER E-PROCESS

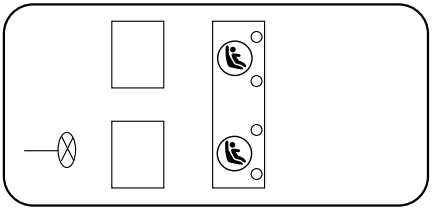

E142535

Your vehicle has LATCH lower anchors for child seat installation at the seating positions marked with the child seat symbol.

E144054

The LATCH anchors are located at the rear section of the rear seat between the cushion and seat back below the symbols as shown. Follow the child seat manufacturer's instructions to properly install a child seat with LATCH attachments. Follow the instructions on attaching child safety seats with tether straps.

Attach LATCH lower attachments of the child seat only to the anchors shown.

Use of Inboard Lower Anchors from the Outboard Seating Positions (Center Seating Use)

WARNING

The standardized spacing for LATCH lower anchors is 11 inches (28 centimeters) center to center. Do not use LATCH lower anchors for the center seating position unless the child seat manufacturer's instructions permit and specify using anchors spaced at least as far apart as those in this vehicle.

The lower anchors at the center of the second row rear seat are spaced 15 inches (39 centimeters) apart. A child seat with rigid LATCH attachments cannot be installed at the center seating position. LATCH compatible child seats (with attachments on belt webbing) can only be used at this seating position provided that the child seat manufacturer's instructions permit use with the anchor spacing stated. Do not attach a child seat to any lower anchor if an adjacent child seat is attached to that anchor.

Each time you use the safety seat, check that the seat is properly attached to the lower anchors and tether anchor, if applicable. Tug the child seat from side to side and forward and back where it is secured to your vehicle. The seat should move less than one inch when you do this for a proper installation.

If the safety seat is not anchored properly, the risk of a child being injured in a crash greatly increases.

Information Provided by:
DEALER E-PROCESS

Combining Safety Belt and LATCH Lower Anchors for Attaching Child Safety Seats

When used in combination, either the safety belt or the LATCH lower anchors may be attached first, provided a proper installation is achieved. Attach the tether strap afterward, if included with the child seat.

Using Tether Straps

Many forward-facing child safety seats include a tether strap which extends from the back of the child safety seat and hooks to an anchoring point called the top tether anchor. Tether straps are available as an accessory for many older safety seats.

Contact the manufacturer of your child seat for information about ordering a tether strap, or to obtain a longer tether strap if the tether strap on your safety seat does not reach the appropriate top tether anchor in your vehicle.

Once the child safety seat has been installed using either the safety belt, the lower anchors of the LATCH system, or both, you can attach the top tether strap.

The tether strap anchors in your vehicle are in the following positions (shown from top view):

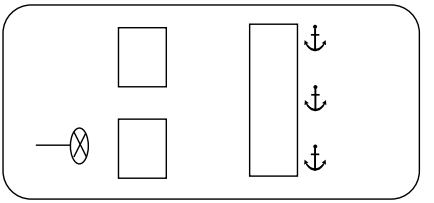

E142537

Perform the following steps to install a child safety seat with tether anchors:

Note: *If you install a child seat with rigid LATCH attachments, do not tighten the tether strap enough to lift the child seat off your vehicle seat cushion when the child is seated in it. Keep the tether strap just snug without lifting the front of the child seat. Keeping the child seat just touching your vehicle seat gives the best protection in a severe crash.*

Four Door

The tether anchors in your vehicle are located under a cover marked with the tether anchor symbol.

1. Route the child safety seat tether strap over the back of the seat. For outboard seating positions, route the tether strap under the head restraint and between the head restraint posts. For the center seating positions, route the tether strap over the top of the head restraint. If needed, the head restraints can also be removed.

E144274

2. Locate the correct anchor for the selected seating position, then open the tether anchor cover.

Information Provided by: DEALER E-PROCESS

E144275

3. Clip the tether strap to the anchor as shown.
4. Tighten the child safety seat tether strap according to the manufacturer's instructions. If your child restraint system is equipped with a tether strap, and the child restraint manufacturer recommends its use, Ford also recommends its use.

Five Door

The tether anchors in your vehicle are located on the back panel of the rear seat. These are marked with the tether anchor symbol.

1. Route the child safety seat tether strap over the back of the seat. For outboard seating positions, route the tether strap under the head restraint and between the head restraint posts. For the center seating positions, route the tether strap over the top of the head restraint. If needed, the head restraints can also be removed.

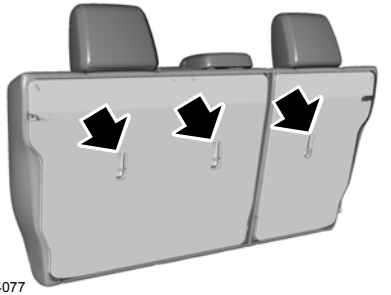

E164077

2. Locate the correct anchor on the back panel of the rear seat for the selected seating position.

E142539

3. Clip the tether strap to the anchor as shown.
4. Tighten the child safety seat tether strap according to the manufacturer's instructions. If your child restraint system is equipped with a tether strap, and the child restraint manufacturer recommends its use, Ford also recommends its use.

BOOSTER SEATS

WARNING

Never place, or allow a child to place, the shoulder belt under a child's arm or behind the back because it reduces the protection for the upper part of the body and may increase the risk of injury or death in a crash.

Use a belt-positioning booster seat for children who have outgrown or no longer properly fit in a child safety seat (generally children who are less than 4 feet 9 inches (1.45 meters) tall, are greater than age four (4) and less than age twelve (12), and between 40 pounds (18 kilograms) and 80 pounds (36 kilograms) and upward to 100 pounds (45 kilograms) if

Information Provided by: DEALER E-PROCESS

recommended by your child restraint manufacturer). Many state and provincial laws require that children use approved booster seats until they reach age eight, a height of 4 feet 9 inches (1.45 meters) tall, or 80 pounds (36 kilograms).

Booster seats should be used until you can answer YES to ALL of these questions when seated without a booster seat:

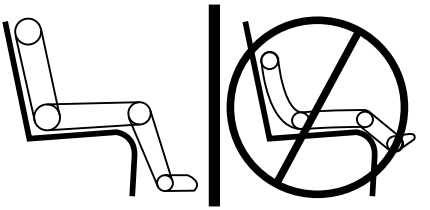

E142595

- Can the child sit all the way back against their vehicle seat back with knees bent comfortably at the edge of the seat cushion?
- Can the child sit without slouching?
- Does the lap belt rest low across the hips?
- Is the shoulder belt centered on the shoulder and chest?
- Can the child stay seated like this for the whole trip?

Always use booster seats in conjunction with your vehicle lap and shoulder belt.

Types of Booster Seats

E68924

- Backless booster seats

If your backless booster seat has a removable shield, remove the shield. If a vehicle seating position has a low seat back or no head restraint, a backless booster seat may place your child's head (as measured at the tops of the ears) above the top of the seat. In this case, move the backless booster to another seating position with a higher seat back or head restraint and lap and shoulder belts, or consider using a high back booster seat.

E70710

- High back booster seats

If, with a backless booster seat, you cannot find a seating position that adequately supports your child's head, a high back booster seat would be a better choice.

Information Provided by:
DEALER E-PROCESS

Children and booster seats vary in size and shape. Choose a booster that keeps the lap belt low and snug across the hips, never up across the stomach, and lets you adjust the shoulder belt to cross the chest and rest snugly near the center of the shoulder. The following drawings compare the ideal fit (center) to a shoulder belt uncomfortably close to the neck and a shoulder belt that could slip off the shoulder. The drawings also show how the lap belt should be low and snug across the child's hips.

E142596

E142597

If the booster seat slides on the vehicle seat upon which it is being used, placing a rubberized mesh sold as shelf or carpet liner under the booster seat may improve this condition. Do not introduce any item thicker than this under the booster seat. Check with the booster seat manufacturer's instructions.

CHILD SEAT POSITIONING

WARNINGS

Airbags can kill or injure a child in a child seat. Never place a rear-facing child seat in front of an active airbag. If you must use a forward-facing child seat in the front seat, move the vehicle seat upon which the child seat is installed all

Information Provided by: DEALER E-PROCESS

WARNINGS

the way back. When possible, all children age 12 and under should be properly restrained in a rear seating position. If all children cannot be seated and restrained properly in a rear seating position, properly restrain the largest child in the front seat.

Always carefully follow the instructions and warnings provided by the manufacturer of any child restraint to determine if the restraint device is appropriate for your child's size, height, weight, or age. Follow the child restraint manufacturer's instructions and warnings provided for installation and use in conjunction with the instructions and warnings provided by your vehicle manufacturer. A safety seat that is improperly installed or utilized, is inappropriate for your child's height, age, or weight or does not properly fit the child may increase the risk of serious injury or death.

WARNINGS

Never let a passenger hold a child on his or her lap while your vehicle is moving. The passenger cannot protect the child from injury in a crash, which may result in serious injury or death.

Never use pillows, books, or towels to boost a child. They can slide around and increase the likelihood of injury or death in a crash.

Always restrain an unoccupied child seat or booster seat. These objects may become projectiles in a crash or sudden stop, which may increase the risk of serious injury.

Never place, or allow a child to place, the shoulder belt under a child's arm or behind the back because it reduces the protection for the upper part of the body and may increase the risk of injury or death in a crash.

To avoid risk of injury, do not leave children or pets unattended in your vehicle.

Information Provided by:
DEALER E-PROCESS

Recommendations for attaching child safety restraints for children

Restraint Type	Combined weight of child and child seat	Use any attachment method as indicated below by X				
		LATCH (lower anchors and top tether anchor)	LATCH (lower anchors only)	Safety belt and top tether anchor	Safety belt and LATCH (lower anchors and top tether anchor)	Safety belt only
Rear facing child seat	Up to 65 lb (29.5 kg)		X			X
Rear facing child seat	Over 65 lb (29.5 kg)					X
Forward facing child seat	Up to 65 lb (29.5 kg)	X		X	X	
Forward facing child seat	Over 65 lb (29.5 kg)			X	X	

Note: *The child seat must rest tightly against the vehicle seat upon which it is installed. It may be necessary to lift or remove the head restraint. See* ***Seats*** *(page 103).*

CHILD SAFETY LOCKS

WARNING

You cannot open the rear doors from inside if you have put the child safety locks on.

Information Provided by: DEALER E-PROCESS

Left-Hand Side

Turn counterclockwise to lock and clockwise to unlock.

Right-Hand Side

Turn clockwise to lock and counterclockwise to unlock.

Information Provided by:
DEALER E-PROCESS

PRINCIPLE OF OPERATION

WARNINGS

Always drive and ride with your seatback upright and the lap belt snug and low across the hips.

To reduce the risk of injury, make sure children sit where they can be properly restrained.

Never let a passenger hold a child on his or her lap while your vehicle is moving. The passenger cannot protect the child from injury in a crash.

All occupants of your vehicle, including the driver, should always properly wear their safety belts, even when an airbag supplemental restraint system is provided. Failure to properly wear your safety belt could seriously increase the risk of injury or death.

It is extremely dangerous to ride in a cargo area, inside or outside of a vehicle. In a crash, people riding in these areas are more likely to be seriously injured or killed. Do not allow people to ride in any area of your vehicle that is not equipped with seats and safety belts. Be sure everyone in your vehicle is in a seat and using a safety belt properly.

In a rollover crash, an unbelted person is significantly more likely to die than a person wearing a safety belt.

Each seating position in your vehicle has a specific safety belt assembly which is made up of one buckle and one tongue that are designed to be used as a pair. 1) Use the shoulder belt on the outside shoulder only. Never wear the shoulder belt under the arm. 2) Never swing the safety belt around your neck over the inside shoulder. 3) Never use a single belt for more than one person.

WARNINGS

When possible, all children 12 years old and under should be properly restrained in a rear seating position. Failure to follow this could seriously increase the risk of injury or death.

Safety belts and seats can become hot in a vehicle that has been closed up in sunny weather; they could burn a small child. Check seat covers and buckles before you place a child anywhere near them.

Front and rear seat occupants, including pregnant women, should wear safety belts for optimum protection in an accident.

All seating positions in your vehicle have lap and shoulder safety belts. All occupants of the vehicle should always properly wear their safety belts, even when an airbag supplemental restraint system is provided.

The safety belt system consists of:

- Lap and shoulder safety belts.
- Shoulder safety belt with automatic locking mode, (except driver safety belt).
- Height adjuster at the front outboard seating positions.
- Safety belt pretensioner at the front outboard seating positions.
- Belt tension sensor at the front outboard passenger seating position.

· Safety belt warning light and chime.

· Crash sensors and monitoring system with readiness indicator.

Information Provided by:
DEALER E-PROCESS

The safety belt pretensioners at the front seating positions are designed to tighten the safety belts when activated. In frontal and near-frontal crashes, the safety belt pretensioners may be activated alone or, if the crash is of sufficient severity, together with the front airbags. The pretensioners may also activate when a side curtain airbag is deployed.

FASTENING THE SAFETY BELTS

The front outboard and rear safety restraints in the vehicle are combination lap and shoulder belts.

E142587

1. Insert the belt tongue into the proper buckle (the buckle closest to the direction the tongue is coming from) until you hear a snap and feel it latch. Make sure the tongue is securely fastened in the buckle.

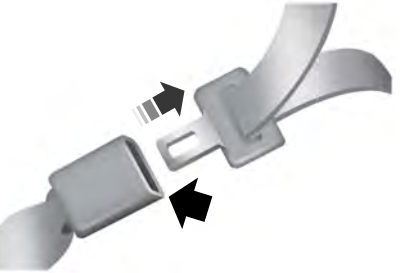

E142588

2. To unfasten, press the release button and remove the tongue from the buckle.

E142589

When in use, the rear safety belts should be placed in the belt guides on the outboard seatbacks.

Using Safety Belts During Pregnancy

WARNING

Always ride and drive with your seatback upright and the safety belt properly fastened. The lap portion of the safety belt should fit snug and be positioned low across the hips. The shoulder portion of the safety belt should be positioned across the chest. Pregnant women should also follow this practice. See the following figure.

Information Provided by: DEALER E-PROCESS

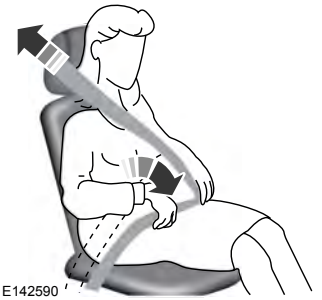

Pregnant women should always wear their safety belt. The lap belt portion of a combination lap and shoulder belt should be positioned low across the hips below the belly and worn as tight as comfort will allow. The shoulder belt should be positioned to cross the middle of the shoulder and the center of the chest.

Safety Belt Locking Modes

WARNINGS

After any vehicle crash, the safety belt system at all passenger seating positions must be checked by an authorized dealer to verify that the automatic locking retractor feature for child seats is still functioning properly. In addition, all safety belts should be checked for proper function.

Belt and retractor assembly must be replaced if the safety belt assembly automatic locking retractor feature or any other safety belt function is not operating properly when checked by an authorized dealer. Failure to replace the belt and retractor assembly could increase the risk of injury in crashes.

All safety restraints in the vehicle are combination lap and shoulder belts. The driver safety belt has the first type of locking mode, and the front outboard passenger and rear seat safety belts have both types of locking modes described as follows:

Vehicle Sensitive Mode

This is the normal retractor mode, which allows free shoulder belt length adjustment to your movements and locking in response to vehicle movement. For example, if the driver brakes suddenly or turns a corner sharply, or the vehicle receives an impact of about 5 mph (8 km/h) or more, the combination safety belts will lock to help reduce forward movement of the driver and passengers.

In addition, the retractor is designed to lock if the webbing is pulled out too quickly. If this occurs, let the belt retract slightly and pull webbing out again in a slow and controlled manner.

Automatic Locking Mode

In this mode, the shoulder belt is automatically pre-locked. The belt will still retract to remove any slack in the shoulder belt. The automatic locking mode is not available on the driver safety belt.

When to Use the Automatic Locking Mode

This mode should be used any time a child safety seat, except a booster, is installed in passenger front or rear seating positions. Children 12 years old and under should be properly restrained in a rear seating position whenever possible. See **Child Safety** (page 15).

Information Provided by:
DEALER E-PROCESS

How to Use the Automatic Locking Mode

E142591

1. Buckle the combination lap and shoulder belt.
2. Grasp the shoulder portion and pull downward until the entire belt is pulled out.

Allow the belt to retract. As the belt retracts, you will hear a clicking sound. This indicates the safety belt is now in the automatic locking mode.

How to Disengage the Automatic Locking Mode

Unbuckle the combination lap and shoulder belt and allow it to retract completely to disengage the automatic locking mode and activate the vehicle sensitive (emergency) locking mode.

Safety Belt Extension Assembly

WARNING

Do not use extensions to change the fit of the shoulder belt across the torso.

If the safety belt is too short when fully extended, a safety belt extension assembly can be obtained from an authorized dealer.

Use only extensions manufactured by the same supplier as the safety belt. Manufacturer identification is on a label located either at the end of the webbing or on the retractor behind the trim. Also, use the safety belt extension only if the safety belt is too short for you when fully extended.

SAFETY BELT HEIGHT ADJUSTMENT

WARNING

Position the safety belt height adjuster so that the belt rests across the middle of your shoulder. Failure to adjust the safety belt properly could reduce the effectiveness of the safety belt and increase the risk of injury in a crash.

Adjust the height of the shoulder belt so the belt rests across the middle of your shoulder.

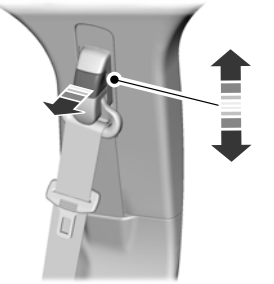

E145664

To adjust the shoulder belt height:

1. Pull the button and slide the height adjuster up or down.
2. Release the button and pull down on the height adjuster to make sure it is locked in place.

Information Provided by: DEALER E-PROCESS

SAFETY BELT WARNING LAMP AND INDICATOR CHIME

This lamp illuminates and an audible warning will sound if the driver's safety belt has not been fastened when the vehicle's ignition is turned on.

Conditions of operation

If...	Then...
The driver's safety belt is not buckled before the ignition switch is turned to the on position...	The safety belt warning light illuminates 1-2 minutes and the warning chime sounds 4-8 seconds.
The driver's safety belt is buckled while the indicator light is illuminated and the warning chime is sounding...	The safety belt warning light and warning chime turn off.
The driver's safety belt is buckled before the ignition switch is turned to the on position...	The safety belt warning light and indicator chime remain off.

SAFETY BELT MINDER

Belt-Minder™

This feature supplements the safety belt warning function by providing additional reminders that intermittently sound a tone and illuminate the safety belt warning light when you are in the driver seat or you have a front seat passenger and a safety belt is unbuckled.

The system uses information from the front passenger sensing system to determine if a front seat passenger is present and therefore potentially in need of a warning. To avoid the system turning on the Belt-Minder feature for objects you place on the front passenger seat, only the front seat passengers receive warnings as determined by the front passenger sensing system.

If the Belt-Minder warnings expire (warnings for about five minutes) for one passenger (driver or front passenger), the other passenger can still cause the Belt-Minder feature to turn on.

Information Provided by: DEALER E-PROCESS

If...	Then...
You and the front seat passenger buckle your safety belts before you switch the ignition on or less than 1–2 minutes elapse after you switch the ignition on...	The Belt-Minder feature will not activate.
You or the front seat passenger do not buckle your safety belts before your vehicle reaches at least 6 mph (9.7 km/h) and 1–2 minutes elapse after you switch the ignition on...	The Belt-Minder feature activates, the safety belt warning light illuminates and a warning tone sounds for 6 seconds every 25 seconds, repeating for about 5 minutes or until you and the front seat passenger buckle your safety belts.
The safety belt for the driver or front passenger is unbuckled for about 1 minute while the vehicle is traveling at least 6 mph (9.7 km/h) and more than 1–2 minutes elapse after you switch the ignition on...	The Belt-Minder feature activates, the safety belt warning light illuminates and a warning tone sounds for 6 seconds every 25 seconds, repeating for about 5 minutes or until you and the front seat passenger buckle your safety belts.

Deactivating and Activating the Belt-Minder Feature

WARNING

While the system allows you to switch this feature off, the intent of the system is to remind you to wear your safety belt to improve your chance to survive an accident. We recommend you leave the system switched on for yourself and others who may use the vehicle.

Note: *The driver and front passenger warnings switch on and off independently. When you perform this procedure for one seating position, do not buckle the other position as this will terminate the process.*

Read Steps 1–4 thoroughly before proceeding with the programming procedure.

Before following the procedure, make sure that:

- The parking brake is set.
- The transmission is in park (P) or neutral (N).
- The ignition is off.
- The driver and front passenger safety belts are unbuckled.

1. Switch the ignition on. Do not start the vehicle.
2. Wait until the safety belt warning light turns off (about 1 minute). After Step 2, wait an additional 5 seconds before proceeding with Step 3. Once you start Step 3, you must complete the procedure within 30 seconds.
3. For the seating position you are switching off, buckle then unbuckle the safety belt three times at a moderate speed, ending in the unbuckled state. After Step 3, the safety belt warning light turns on.

Information Provided by: DEALER E-PROCESS

4. While the safety belt warning light is on, buckle and then unbuckle the safety belt. After Step 4, the safety belt warning light flashes for confirmation.

- This will switch the feature off for that seating position if it is currently on.
- This will switch the feature on for that seating position if it is currently off.

CHILD RESTRAINT AND SAFETY BELT MAINTENANCE

Inspect the vehicle safety belts and child safety seat systems periodically to make sure they work properly and are not damaged. Inspect the vehicle and child seat safety belts to make sure there are no nicks, tears or cuts. Replace if necessary. All vehicle safety belt assemblies, including retractors, buckles, front safety belt buckle assemblies, buckle support assemblies (slide bar-if equipped), shoulder belt height adjusters (if equipped), shoulder belt guide on seat back (if equipped), child safety seat LATCH and tether anchors, and attaching hardware, should be inspected after a crash. Read the child restraint manufacturer's instructions for additional inspection and maintenance information specific to the child restraint.

Ford Motor Company recommends that all safety belt assemblies in use in vehicles involved in a crash be replaced. However, if the crash was minor and an authorized dealer finds that the belts do not show damage and continue to operate properly, they do not need to be replaced. Safety belt assemblies not in use during a crash should also be inspected and replaced if either damage or improper operation is noted.

Properly care for safety belts.

Information Provided by:
DEALER E-PROCESS

The Personal Safety System provides an improved overall level of frontal crash protection to front seat occupants and is designed to help further reduce the risk of airbag-related injuries. The system is able to analyze different occupant conditions and crash severity before activating the appropriate safety devices to help better protect a range of occupants in a variety of frontal crash situations.

The Vehicle Personal Safety System consists of:

- Driver and passenger dual-stage airbag supplemental restraints.
- Front seat outboard safety belts with pretensioners, energy management retractors and safety belt usage sensors.
- Driver seat position sensor.
- Front passenger sensing system.
- Passenger airbag off and on indicator lamp.
- Front crash severity sensors.
- Restraints control module with impact and safing sensors.
- Restraint system warning light and backup tone.
- The electrical wiring for the airbags, crash sensors, safety belt pretensioners, front safety belt usage sensors, driver seat position sensor, front passenger sensing system and indicator lights.

How Does the Personal Safety System Work?

The Personal Safety System can adapt the deployment strategy of the safety devices according to crash severity and occupant conditions. A collection of crash and occupant sensors provides information to the restraints control module. During a crash, the restraints control module may deploy the safety belt pretensioners, one or both stages of the dual-stage airbags based on crash severity and occupant conditions.

Information Provided by:
DEALER E-PROCESS

PRINCIPLE OF OPERATION

WARNINGS

Airbags do not inflate slowly or gently, and the risk of injury from a deploying airbag is the greatest close to the trim covering the airbag module.

All occupants of your vehicle, including the driver, should always properly wear their safety belts, even when an airbag supplemental restraint system is provided. Failure to properly wear your safety belt could seriously increase the risk of injury or death.

Always transport children 12 years old and under in the back seat and always properly use appropriate child restraints. Failure to follow this could seriously increase the risk of injury or death.

Never place your arm over the airbag module as a deploying airbag can result in serious arm fractures or other injuries.

Airbags can kill or injure a child in a child seat. Never place a rear-facing child seat in front of an active airbag. If you must use a forward-facing child seat in the front seat, move the seat upon which the child seat is installed all the way back.

Do not attempt to service, repair, or modify the airbag supplemental restraint systems or its fuses as you could be seriously injured or killed. Contact your authorized dealer as soon as possible.

Several airbag system components get hot after inflation. Do not touch them after inflation as this may result in serious injury.

If the airbag has deployed, the airbag will not function again and must be replaced immediately. If the airbag is not replaced, the unrepaired area will increase the risk of injury in a crash.

The airbags are a supplemental restraint system and are designed to work with the safety belts to help protect the driver and right front passenger from certain upper body injuries. Airbags do not inflate slowly; there is a risk of injury from a deploying airbag.

Note: *You will hear a loud bang and see a cloud of harmless powdery residue if an airbag deploys. This is normal.*

The airbags inflate and deflate rapidly upon activation. After airbag deployment, it is normal to notice a smoke-like, powdery residue or smell the burnt propellant. This may consist of cornstarch, talcum powder (to lubricate the bag) or sodium compounds (for example, baking soda) that result from the combustion process that inflates the airbag. Small amounts of sodium hydroxide may be present which may irritate the skin and eyes, but none of the residue is toxic.

While the system is designed to help reduce serious injuries, contact with a deploying airbag may also cause abrasions or swelling. Temporary hearing loss is also a possibility as a result of the noise associated with a deploying airbag. Because airbags must inflate rapidly and with considerable force, there is the risk of death or serious injuries such as fractures, facial and eye injuries or internal injuries, particularly to occupants who are not properly restrained or are otherwise out of position at the time of airbag deployment. Thus, it is extremely important that occupants be properly restrained as far away from the airbag module as possible while maintaining vehicle control.

Routine maintenance of the airbags is not required.

Information Provided by: DEALER E-PROCESS

DRIVER AND PASSENGER AIRBAGS

WARNINGS

Never place your arm or any objects over an airbag module. Placing your arm over a deploying airbag can result in serious arm fractures or other injuries. Objects placed on or over the airbag inflation area may cause those objects to be propelled by the airbag into your face and torso causing serious injury.

Airbags can kill or injure a child in a child seat. Never place a rear-facing child seat in front of an active airbag. If you must use a forward-facing child seat in the front seat, move the seat upon which the child seat is installed all the way back.

E151127

The driver and front passenger airbags will deploy during significant frontal and near frontal crashes.

The driver and passenger front airbag system consists of:

- Driver and passenger airbag modules.
- Front passenger sensing system.

· Crash sensors and monitoring system with readiness indicator. See **Crash Sensors and Airbag Indicator** (page 43).

Proper Driver and Front Passenger Seating Adjustment

WARNING

National Highway Traffic Safety Administration (NHTSA) recommends a minimum distance of at least 10 inches (25 centimeters) between an occupant's chest and the driver airbag module.

To properly position yourself away from the airbag:

- Move your seat to the rear as far as you can while still reaching the pedals comfortably.
- Recline the seat slightly (one or two degrees) from the upright position.

After all occupants have adjusted their seats and put on safety belts, it is very important that they continue to sit properly. A properly seated occupant sits upright, leaning against the seat back, and centered on the seat cushion, with their feet comfortably extended on the floor. Sitting improperly can increase the chance of injury in a crash event. For example, if an occupant slouches, lies down, turns sideways, sits forward, leans forward or sideways, or puts one or both feet up, the chance of injury during a crash is greatly increased.

Children and Airbags

WARNING

Airbags can kill or injure a child in a child seat. Never place a rear-facing child seat in front of an active airbag. If you must use a forward-facing child seat in the front seat, move the seat upon which the child seat is installed all the way back.

Information Provided by: DEALER E-PROCESS

E142846

Children must always be properly restrained. Accident statistics suggest that children are safer when properly restrained in the rear seating positions than in the front seating position. Failure to follow these instructions may increase the risk of injury in a crash.

FRONT PASSENGER SENSING SYSTEM

WARNINGS

Even with Advanced Restraints Systems, children 12 and under should be properly restrained in a rear seating position. Failure to follow this could seriously increase the risk of injury or death.

Sitting improperly out of position or with the seatback reclined too far can take off weight from the seat cushion and affect the decision of the front passenger sensing system, resulting in serious injury or death in a crash. Always sit upright against your seatback, with your feet on the floor.

To reduce the risk of possible serious injury: Do not stow objects in the seatback map pocket or hang objects off a seatback if a child is in the front passenger seat. Do not place objects underneath the front passenger seat or between the seat and the center console. Check the passenger airbag off or pass airbag off indicator lamp for proper airbag status. Failure to follow these instructions may interfere with the front passenger seat sensing system.

Any alteration or modification to the front passenger seat may affect the performance of the front passenger sensing system which could seriously increase the risk of injury or death.

This system works with sensors that are part of the front passenger seat and safety belt to detect the presence of a properly-seated occupant and determine if the front passenger frontal airbag should be enabled (may inflate) or not.

E157152

The front passenger sensing system uses a passenger airbag off indicator which will illuminate and stay lit to remind you that the front passenger frontal airbag is disabled.

The indicator lamp is located at the top center of the instrument panel.

Note: *When the ignition is first tuned on, the indicator lamp will illuminate for a short period of time to confirm it is functional.*

Information Provided by:
DEALER E-PROCESS

The front passenger sensing system is designed to disable (will not inflate) the front passenger frontal airbag when a rear facing infant seat, a forward-facing child restraint, or a booster seat is detected. Even with this technology, parents are **strongly** encouraged to always properly restrain children in the rear seat. The sensor also turns off the passenger front airbag and seat-mounted side airbag when the passenger seat is empty.

- When the front passenger sensing system disables (will not inflate) the front passenger frontal airbag, the indicator lamp will illuminate and stay lit to remind you that the front passenger frontal airbag is disabled.
- If the child restraint has been installed and the indicator lamp is not lit, then turn the vehicle off, remove the child restraint from the vehicle and reinstall the restraint following the child restraint manufacturer's instructions.

The front passenger sensing system is designed to enable (may inflate) the front passenger frontal airbag anytime the system senses that a person of adult size is sitting properly in the front passenger seat.

- When the front passenger sensing system enables the front passenger frontal airbag (may inflate), the indicator lamp will be unlit and stay unlit.

If a person of adult size is sitting in the front passenger seat, but the airbag off indicator lamp is lit, it is possible that the person is not sitting properly in the seat. If this happens:

- Turn the vehicle off and ask the person to place the seatback in the full upright position.
- Have the person sit upright in the seat, centered on the seat cushion, with the person's legs comfortably extended.
- Restart the vehicle and have the person remain in this position for about two minutes. This will allow the system to detect that person and enable the passenger frontal airbag.
- If the indicator lamp remains lit even after this, the person should be advised to ride in the rear seat.

Occupant	Passenger airbag OFF indicator	Passenger airbag
Empty	Unlit	Disabled
Child	Lit	Disabled
Adult	Unlit	Enabled

Note: *When the passenger airbag off light is illuminated, the passenger (seat mounted) side airbag may be disabled to avoid the risk of airbag deployment injuries.*

After all occupants have adjusted their seats and put on safety belts, it is very important that they continue to sit properly. A properly seated occupant sits upright, leaning against the seatback, and centered on the seat cushion, with their feet comfortably extended on the floor. Sitting improperly can increase the chance

Information Provided by: DEALER E-PROCESS

of injury in a crash event. For example, if an occupant slouches, lies down, turns sideways, sits forward, leans forward or sideways, or puts one or both feet up, the chance of injury during a crash is greatly increased.

If you think that the status of the passenger airbag off indicator lamp is incorrect, check for the following:

- Objects lodged underneath the seat.
- Objects between the seat cushion and the center console.
- Objects hanging off the seatback.
- Objects stowed in the seatback map pocket.
- Objects placed on the occupant's lap.
- Cargo interference with the seat.
- Other passengers pushing or pulling on the seat.
- Rear passenger feet and knees resting or pushing on the seat.

The conditions listed above may cause the weight of a properly seated occupant to be incorrectly interpreted by the front passenger sensing system. The person in the front passenger seat may appear heavier or lighter due to the conditions described in the list above.

Make sure the front passenger sensing system is operating properly. See **Crash Sensors and Airbag Indicator** (page 43).

If the airbag readiness light is lit, do the following:

The driver and adult passengers should check for objects lodged underneath the front passenger seat, or cargo interfering with the seat.

If there are lodged objects, or cargo is interfering with the seat, take the following steps to remove the obstruction:

- Pull the vehicle over.
- Turn the vehicle off.
- Driver and adult passengers should check for any objects lodged underneath the front passenger seat or cargo interfering with the seat.
- Remove the obstruction(s) (if found).
- Restart the vehicle.
- Wait at least two minutes and verify that the airbag readiness light is no longer illuminated.
- If the airbag readiness light remains illuminated, this may or may not be a problem due to the front passenger sensing system.

Do not attempt to repair or service the system. Take your vehicle immediately to an authorized dealer.

If it is necessary to modify an advanced front airbag system to accommodate a person with disabilities, contact the Ford Customer Relationship Center. See **Getting the Services You Need** (page 162).

SIDE AIRBAGS

WARNINGS

Do not place objects or mount equipment on or near the airbag cover, on the side of the seatbacks (of the front seats), or in front seat areas that may come into contact with a deploying airbag. Failure to follow these instructions may increase the risk of personal injury in the event of a crash.

Do not use accessory seat covers. The use of accessory seat covers may prevent the deployment of the side airbags and increase the risk of injury in an accident.

Information Provided by: DEALER E-PROCESS

WARNINGS

Do not lean your head on the door. The side airbag could injure you as it deploys from the side of the seatback.

Do not attempt to service, repair, or modify the airbag, its fuses or the seat cover on a seat containing an airbag as you could be seriously injured or killed. Contact your authorized dealer as soon as possible.

If the side airbag has deployed, the airbag will not function again. The side airbag system (including the seat) must be inspected and serviced by an authorized dealer. If the airbag is not replaced, the unrepaired area will increase the risk of injury in a crash.

The side airbags are located on the outboard side of the seatbacks of the front seats. In certain sideways crashes, the airbag on the side affected by the crash will be inflated. The airbag was designed to inflate between the door panel and occupant to further enhance the protection provided occupants in side impact crashes.

E152533

The system consists of the following:

- A label or embossed side panel indicating that side airbags are fitted to your vehicle.
- Side airbags located inside the driver and front passenger seatbacks.
- Front passenger sensing system.

- Crash sensors and monitoring system with readiness indicator. See **Crash Sensors and Airbag Indicator** (page 43).

Note: *The passenger sensing system will deactivate the passenger seat-mounted side airbag if it detects an empty passenger seat.*

The design and development of the side airbag system included recommended testing procedures that were developed by a group of automotive safety experts known as the Side Airbag Technical Working Group. These recommended testing procedures help reduce the risk of injuries related to the deployment of side airbags.

DRIVER KNEE AIRBAG

A driver's knee airbag is located under or within the instrument panel. During a crash, the restraints control module may activate the driver's knee airbag based on crash severity and occupant conditions. Under certain crash and occupant conditions, the driver's knee airbag may deploy but the driver's front airbag may not activate. As with front and side airbags, it is important to be properly seated and restrained to reduce the risk of death or serious injury.

Make sure the knee airbag is operating properly. See **Crash Sensors and Airbag Indicator** (page 43).

Information Provided by: DEALER E-PROCESS

SIDE CURTAIN AIRBAGS

WARNINGS

Do not place objects or mount equipment on or near the headliner at the siderail that may come into contact with a deploying side curtain airbag. Failure to follow these instructions may increase the risk of personal injury in the event of a crash.

Do not lean your head on the door. The side curtain airbag could injure you as it deploys from the headliner.

Do not attempt to service, repair, or modify the side curtain airbags, its fuses, the A, B, or C pillar trim, or the headliner on a vehicle containing side curtain airbags. Contact your authorized dealer as soon as possible.

All occupants of the vehicle including the driver should always wear their safety belts even when an airbag supplemental restraint system and side curtain airbag is provided. Failure to properly wear your safety belt could seriously increase the risk of injury or death.

To reduce risk of injury, do not obstruct or place objects in the deployment path of the side curtain airbag.

If the side curtain airbags have deployed, the side curtain airbags will not function again. The side curtain airbags (including the A, B and C pillar trim and headliner) must be inspected and serviced by an authorized dealer. If the side curtain airbag is not replaced, the unrepaired area will increase the risk of injury in a crash.

In certain sideways crashes, the side curtain airbag on the side affected by the crash will be inflated. The side curtain airbags are mounted to the roof side-rail sheet metal, behind the headliner, above each row of seats. The side curtain airbags are designed to inflate between the side window area and occupants to further enhance protection provided in side impact crashes.

The system consists of the following:

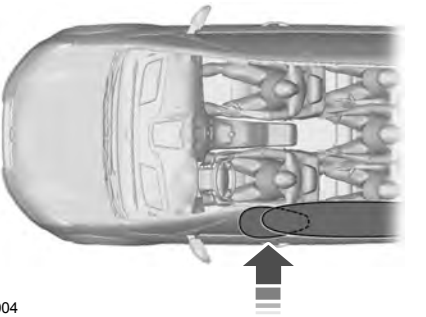

E75004

- Side curtain airbags located above the trim panels over the front and rear side windows identified by a label or wording on the headliner or roof-pillar trim.
- A flexible headliner which opens above the side doors to allow side air curtain deployment.

· Crash sensors and monitoring system with readiness indicator. See **Crash Sensors and Airbag Indicator** (page 43).

Children 12 years old and under should always be properly restrained in the back seats. The side curtain airbags will not interfere with children restrained using a properly installed child or booster seat because it is designed to inflate downward from the headliner above the doors along the side window opening.

Information Provided by: DEALER E-PROCESS

The design and development of the side curtain airbags included recommended testing procedures that were developed by a group of automotive safety experts known as the Side Airbag Technical Working Group. These recommended testing procedures help reduce the risk of injuries related to the deployment of side curtain airbags.

CRASH SENSORS AND AIRBAG INDICATOR

WARNING

Do not modify the front end of your vehicle. Modifying or adding equipment to the front end of your vehicle, including frame, bumper, front end body structure or tow hooks, may affect the performance of the airbag system, increasing the risk of injury.

Your vehicle has a collection of crash and occupant sensors. These provide information to the restraints control module which will deploy the front safety belt pretensioners, driver airbag, driver knee airbag, passenger airbag, seat mounted side airbags, and the side curtain airbags. Based on the type of crash, frontal impact or side impact, the restraints control module will deploy the appropriate safety devices.

The restraints control module also monitors the readiness of the above safety devices plus the crash and occupant sensors. The readiness of the safety system is indicated by a warning lamp in the instrument cluster or by a backup tone if the warning lamp is not working. Routine maintenance of the airbag is not required.

A difficulty with the system is indicated by one or more of the following:

The lamp will not illuminate immediately when you switch the ignition on.

- The lamp will either flash or remain on.
- A series of five beeps will be heard. The tone pattern will repeat periodically until the problem, the lamp or both are repaired.

If any of these things happen, even intermittently, have the supplemental restraint system checked by an authorized dealer immediately. Unless serviced, the system may not function correctly in the event of a crash.

The safety belt pretensioners and the front airbag supplemental restraint system are designed to deploy when your vehicle sustains longitudinal deceleration sufficient to cause the restraints control module to deploy a safety device.

The fact that the safety belt pretensioners or front airbags did not deploy for both front seat occupants in a crash does not mean that something is wrong with the system. It means the restraints control module determined that the crash conditions were not appropriate to deploy these safety devices.

- The design of the front airbags is to deploy only in frontal and near-frontal crashes (not rollovers, side impacts or rear impacts) unless the crash causes sufficient longitudinal deceleration.
- The design of the safety belt pretensioners is to deploy in frontal and near-frontal crashes, and may also deploy when a side curtain airbag deploys.

Information Provided by: DEALER E-PROCESS

- The knee airbag may deploy based on crash severity and occupant conditions.
- The design of the side airbags and side curtain airbags is to deploy in certain side impact crashes. These devices may deploy in other types of crashes if your vehicle experiences sufficient sideways motion or deformation.

AIRBAG DISPOSAL

Contact your authorized dealer as soon as possible. Airbags must be disposed of by qualified personnel.

Information Provided by:
DEALER E-PROCESS

GENERAL INFORMATION ON RADIO FREQUENCIES

This device complies with Part 15 of the FCC Rules and with Industry Canada license-exempt RSS standard(s). Operation is subject to the following two conditions: (1) This device may not cause harmful interference, and (2) This device must accept any interference received, including interference that may cause undesired operation.

Note: *Changes or modifications not expressively approved by the party responsible for compliance could void the user's authority to operate the equipment. The term **IC** before the radio certification number only signifies that Industry Canada technical specifications were met.*

The typical operating range for your transmitter is approximately 33 ft (10 m). Vehicles with the remote start feature will have a greater range.

One of the following could cause a decrease in operating range:

- Weather conditions.
- Nearby radio towers.
- Structures around the vehicle.
- Other vehicles parked next to your vehicle.

The radio frequency used by your remote control can also be used by other radio transmitters, for example amateur radios, medical equipment, wireless headphones, wireless remote controls, cell phones, battery chargers and alarm systems. If the frequencies are jammed, you will not be able to use your remote control. You can lock and unlock the doors with the key.

Note: *Make sure to lock your vehicle before leaving it unattended.*

Note: *If you are in range, the remote control will operate if you press any button unintentionally.*

Intelligent Access (If Equipped)

The system uses a radio frequency signal to communicate with your vehicle and authorize your vehicle to unlock when one of the following conditions are met:

- You activate the front exterior door handle switch.
- You press the luggage compartment button.
- You press a button on the transmitter.

If excessive radio frequency interference is present in the area or if the transmitter battery is low, you may need to mechanically unlock your door. You can use the mechanical key blade in your intelligent access key to open the driver door in this situation. See **Remote Control** (page 45).

REMOTE CONTROL

Integrated Keyhead Transmitter (If Equipped)

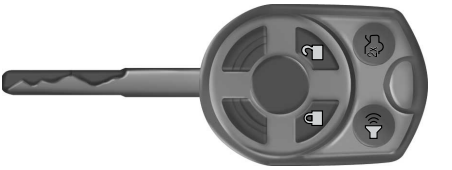

E142585

Use the key blade to start your vehicle and unlock or lock the driver door from outside your vehicle. The transmitter portion functions as the remote control.

Information Provided by: DEALER E-PROCESS

E162601

Note: *Your vehicle's keys came with a security label that provides important vehicle key cut information. Keep the label in a safe place for future reference.*

Intelligent Access Transmitter (If Equipped)

Your intelligent access keys operate the power locks. The key must be in your vehicle to activate the push button start system.

The intelligent access key also contains a removable mechanical key blade that you can use to unlock the driver door.

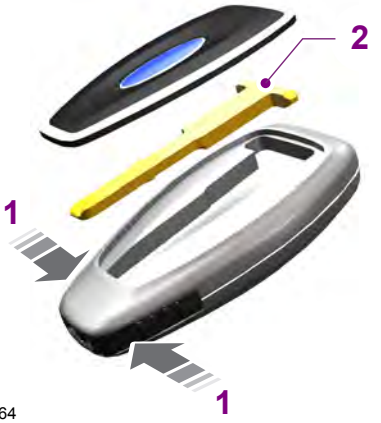

E87964

Note: *Your vehicle's back-up keys came with a security tag that provides important vehicle key cut information. Keep the tag in a safe place for future reference.*

Programming a New Integrated Keyhead Transmitter

1. Turn the ignition key from position **0** to position **II** 8 times within 10 seconds.
2. Turn the ignition key to position **0**. A tone sounds to indicate that it is now possible to program a remote control.
3. Press any button on a new remote control within 10 seconds. A tone sounds as confirmation.
4. Repeat step 3 within 10 seconds for each new remote control. Do not remove the key from the ignition when pressing the button on the remote control.
5. Turn the ignition key to position **II**, or wait for 10 seconds without programming another remote control to end the key programming. Only the remote controls that you have just programmed are now able to lock and unlock your vehicle.

Reprogramming the Unlocking Function

Note: *When you press the unlock button either all the doors are unlocked or only the driver's door and the liftgate are unlocked. Pressing the unlock button again unlocks all the doors.*

You can reprogram the unlocking function using the remote control so that only the driver's door is unlocked. This will enable two-stage unlocking.

Press and hold the unlock and lock buttons on the remote control simultaneously for at least four seconds with the ignition off. The direction indicators will flash twice to confirm the change.

Information Provided by:
DEALER E-PROCESS

To return to the original unlocking function, repeat the process.

Replacing the Battery

Note: *Refer to local regulations when disposing of transmitter batteries.*

Note: *Do not wipe off any grease on the battery terminals or on the back surface of the circuit board.*

Note: *Replacing the battery will not delete the transmitter from the vehicle. The transmitter should operate normally.*

The remote control uses one coin-type three-volt lithium battery CR2032 or equivalent.

Vehicles Without Intelligent Access

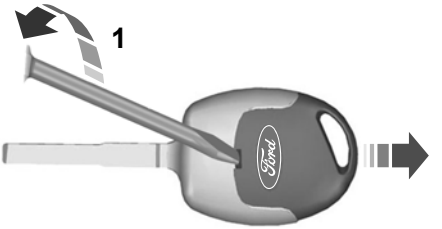

E126152

1. Insert a screwdriver into the recess on the back of the key and remove the key blade.

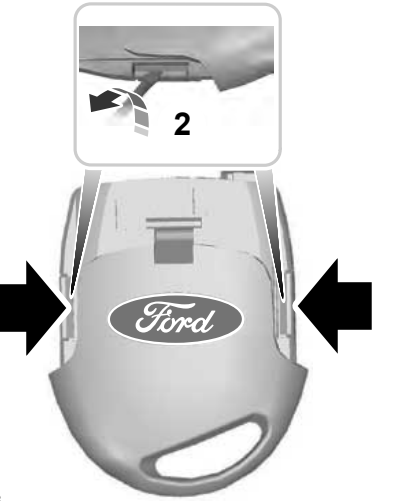

E126153

2. Release the retaining clips with the screwdriver and separate the two halves of the remote control.

E126281

Note: *Do not touch the battery contacts or the printed circuit board with the screwdriver.*

3. Carefully pry out the battery with the screwdriver.
4. Install a new battery (3V CR 2032) with the **+** facing upward.

Information Provided by:
DEALER E-PROCESS

5. Assemble the two halves of the remote control.
6. Install the key blade.

Integrated Keyhead Transmitter

E138619

1. Twist a thin coin in the slot of the transmitter near the key ring to remove the battery cover.
2. Remove the old battery.

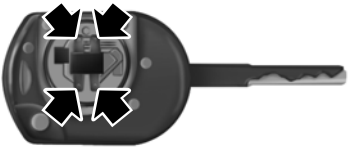

E138620

3. Insert the new battery. Refer to the instructions inside the transmitter for the correct orientation of the battery. Press the battery down to make sure it is fully in the housing.
4. Snap the battery cover back onto the transmitter.

Intelligent Access Transmitter

E87964

1. Press and hold the buttons on the edges to release the cover. Carefully remove the cover.
2. Remove the key blade.

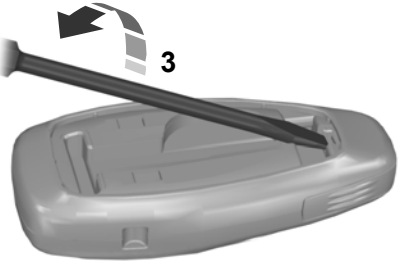

E105362

3. Twist the screwdriver in the position shown to start separating the two halves of the remote control.

Information Provided by:
DEALER E-PROCESS

E119190

4. Twist the screwdriver in the position shown to separate the two halves of the remote control.

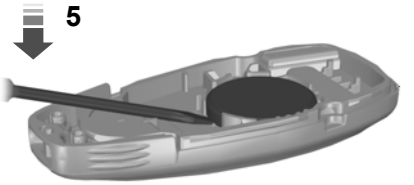

E125860

Note: *Do not touch the battery contacts or the printed circuit board with the screwdriver.*

5. Carefully remove the battery with the screwdriver.
6. Install a new battery (3V CR 2032) with the **+** facing downward.
7. Assemble the two halves of the remote control.
8. Install the key blade.

Car Finder

Press the button twice within three seconds. The horn will sound and the turn signals will flash. We recommend you use this method to locate your vehicle, rather than using the panic alarm.

Note: *If locking was not successful or if any door or the liftgate is open, or if the hood is open on vehicles with a perimeter alarm or remote start, the horn will sound twice and the lamps will not flash.*

Sounding a Panic Alarm (If Equipped)

Note: *The panic alarm will only operate when the ignition is off.*

Press the button to activate the alarm. Press the button again or turn the ignition on to deactivate.

REPLACING A LOST KEY OR REMOTE CONTROL

Replacement or additional keys or remote controls can be purchased from an authorized dealer. Your dealer can program the remote controls for your vehicle or you may be able to program them yourself. See **Remote Control** (page 45).

To re-program the passive anti-theft system see an authorized dealer.

Information Provided by:
DEALER E-PROCESS

PRINCIPLE OF OPERATION

MyKey allows you to program keys with restricted driving modes to promote good driving habits. All but one of the keys programmed to the vehicle can be activated with these restricted modes.

Any keys that have not been programmed are referred to as administrator keys or admin keys. These can be used to:

- Create a MyKey.
- Program configurable MyKey settings.
- Clear all MyKey features.

When you have created a MyKey, you can access the following information using the information display:

- How many admin keys and MyKeys are programmed to your vehicle.
- The total distance your vehicle has traveled using any MyKey.

Note: *All MyKeys are programmed to the same settings. You cannot program them individually.*

Note: *For vehicles with keyless start, when both a MyKey transmitter and an admin transmitter are present, the admin transmitter will be recognized by the vehicle to start the engine.*

Non-configurable Settings

The following settings cannot be changed:

- Belt-Minder™. You cannot disable this feature. The audio system will mute when the driver and front seat passengers' safety belts are not fastened.
- Early low-fuel warning. The low-fuel warning activates earlier, giving the MyKey user more time to refuel.
- Driver assist features, if equipped on your vehicle, are forced on: parking aid.

Configurable Settings

You can configure certain MyKey settings when you first create a MyKey. You can also change the settings afterward with an admin key.

The following settings can be configured using an admin key:

- A vehicle speed limit can be set. Warnings will be shown in the display followed by an audible tone when your vehicle reaches the set speed. You cannot override the set speed by fully depressing the accelerator pedal or by setting the cruise control.

WARNING

Do not set MyKey maximum speed limit to a limit that will prevent the driver from maintaining a safe speed considering posted speed limits and prevailing road conditions. The driver is always responsible to drive in accordance with local laws and prevailing conditions. Failure to do so could result in accident or injury.

- Vehicle speed minders can be set. Once you select a speed, a visual warning will be shown in the display followed by an audible tone when the set vehicle speed is exceeded.
- Audio system maximum volume of 45%. A message will be shown in the display when you attempt to exceed the limited volume. Also, the speed sensitive compensated volume (automatic volume control) feature will be disabled.
- Always on setting. When this is selected you will not be able to disable AdvanceTrac, 911 Assist or the do not disturb feature (if your vehicle is equipped with these features).

Information Provided by: DEALER E-PROCESS

CREATING A MYKEY

Use the information display to create a MyKey:

1. Insert the key you want to program into the ignition. If your vehicle is equipped with a push-button start, place the remote control into the backup slot. The location of your backup slot is in another chapter. See **Keyless Starting** (page 111).
2. Switch the ignition on.
3. Access the main menu on the information display controls. Use the arrow keys to get to the following menu selections:

Message	Action and Description
Settings	Press the **OK** button or the right arrow key.
MyKey	Press the **OK** button or the right arrow key.
Create MyKey	Press the **OK** button or the right arrow key.

When prompted, hold the **OK** button until you see a message informing you to label this key as a MyKey. The key will be restricted at the next start.

MyKey is successfully created. Make sure you label it so you can distinguish it from the admin keys.

You can also program configurable settings for the key(s). See **Programming/Changing Configurable Settings**.

Programming/Changing Configurable Settings

Use the information display to access your configurable MyKey settings.

1. Switch the ignition on using an admin key or remote control.
2. Access the main menu on the information display controls. Use the arrow keys to get to the following menu selections:

Message	Action and Description
Settings	Press the **OK** button or the right arrow key.
MyKey	Press the **OK** button or the right arrow key.

Note: *You can clear or change your MyKey settings at any time during the same key cycle as you created the MyKey. Once you have switched the vehicle off, however, you will need an admin key to change or clear your MyKey settings.*

CLEARING ALL MYKEYS

You can clear or change your MyKey settings using the information display control. See **Information Displays** (page 84).

Information Provided by: DEALER E-PROCESS

Switch the ignition on using an admin key or fob.

To clear all MyKeys of all MyKey settings, access the main menu and scroll to:

Message	Action and Description
Settings	Press the **OK** button.
MyKey	Press the **OK** button.
Clear MyKey	Press and hold the **OK** button until the following message displays.
All MyKeys Cleared	

Note: *When you clear your MyKeys, you remove all restrictions and return all MyKeys to their original admin key status.*

Information Provided by:
DEALER E-PROCESS

CHECKING MYKEY SYSTEM STATUS

You can find information about your programmed MyKeys by using the information display.

MyKey Distance

Tracks the distance when drivers use a MyKey. The only way to delete the accumulated distance is by using an admin key to clear all MyKeys. If the distance does not accumulate as expected, then the intended user is not using the MyKey, or an admin key user recently cleared and then recreated a MyKey.

Number of MyKeys

Indicates the number of MyKeys programmed to your vehicle. Use this feature to detect how many MyKeys you have for your vehicle and determine when all MyKeys have been deleted.

Number of Admin Keys

Indicates how many admin keys are programmed to your vehicle. Use this feature to determine how many admin keys you have for your vehicle, and detect if an additional MyKey has been programmed.

USING MYKEY WITH REMOTE START SYSTEMS

MyKey is not compatible with non-Ford-approved aftermarket remote start systems. If you choose to install a remote start system, please see an authorized dealer for a Ford-approved remote start system.

MYKEY TROUBLESHOOTING

Condition	Potential causes
I cannot create a MyKey.	· The key or transmitter used to start the vehicle does not have admin privileges. · The key or transmitter used to start the vehicle is the only admin key (there always has to be at least one admin key). · Vehicles with keyless start: The transmitter is not in the correct position. The position location is in another chapter. See **Keyless Starting** (page 111). · SecuriLock passive anti-theft system is disabled or in unlimited mode.
I cannot program the configurable settings.	· The key or transmitter used to start the vehicle does not have admin privileges.

Information Provided by: DEALER E-PROCESS

Condition	Potential causes
	· No MyKeys have been created. See **Creating a MyKey** (page 51).
I cannot clear the MyKeys.	· The key or transmitter used to start the vehicle does not have admin privileges. · No MyKeys are programmed to the vehicle. See **Creating a MyKey** (page 51).
I lost the only admin key.	Purchase a new key or transmitter from an authorized dealer, or program a spare key or transmitter. See **Passive Anti-Theft System** (page 63).
I lost a key.	Program a spare key or transmitter, or purchase a new key or transmitter. See **Passive Anti-Theft System** (page 63).
No MyKey functions with the keyless start transmitter.	· An admin key or transmitter is present at engine start-up. · No MyKeys are programmed to the vehicle. See **Creating a MyKey** (page 51).
MyKey distances do not accumulate.	· The MyKey user is not using a MyKey. · An admin key holder cleared the MyKeys and reset the key system.

Information Provided by:
DEALER E-PROCESS

LOCKING AND UNLOCKING

Remote Control

Unlocking the Doors

Note: *The driver door can be unlocked with the key if the remote control is not functioning.*

Note: *When you lock your vehicle for several weeks, the remote control will be switched off. Your vehicle must be unlocked and the engine started using the key. Unlocking and starting your vehicle once will enable the remote control.*

One-Stage Unlocking

Press the button to unlock all doors.

The direction indicators will flash.

Two-Stage Unlocking

Press the button to unlock the driver door.

Press the button again within three seconds to unlock all doors.

The direction indicators will flash.

Reprogramming the Unlocking Function

You can reprogram the unlocking function using the remote control to change between one-stage and two-stage unlocking. See **Remote Control** (page 45).

Locking the Doors

Press the button to lock all the doors. The direction indicators will flash.

Press the button again within three seconds to confirm that all the doors are closed. The doors will lock again, the direction indicators will flash and the horn will sound, if all the doors and the luggage compartment are closed.

Note: *If any door, the hood or the luggage compartment is open on vehicles that have an anti-theft alarm or remote start, the direction indicators will not flash but the horn will sound.*

Automatic Re-locking

The doors will relock automatically if you do not open a door within 45 seconds of unlocking the doors with the remote control. The door locks and the alarm will return to their previous state.

Locking and Unlocking the Doors From Inside

The power door lock control is located on the instrument panel near the radio.

Press the button to lock and unlock all the doors. The lamp illuminates with the doors locked.

Locking and Unlocking the Doors With the Key

Note: *Do not leave your keys in your vehicle.*

Locking With the Key

Turn the top of the key toward the front of your vehicle.

Unlocking With the Key

Turn the top of the key toward the rear of your vehicle to unlock the driver door. Turn the key again within a few seconds to unlock the remaining doors.

Information Provided by: DEALER E-PROCESS

Unlocking the Doors With the Interior Door Handles

You can unlock individual doors by pulling the relevant interior door handle. Pulling the driver interior door handle will unlock all the doors, if auto unlock has been enabled.

Rear Door Unlocking and Opening

Pull the interior door release handle twice to unlock and open the rear door. The first pull unlocks the door and the second pull will unlatch the door.

Smart Unlocks for Integrated Keyhead Transmitter

This feature helps to prevent you from locking yourself out of your vehicle if your key is still in the ignition.

When you open one of the front doors and lock your vehicle with the power door lock control, all the doors will lock then unlock if your key is still in the ignition.

You can still lock your vehicle with the key in the ignition by pressing the lock button on the transmitter even if the doors are not closed.

If both front doors are closed, you can lock your vehicle by any method, regardless of whether the key is in the ignition or not.

Smart Unlocks for Intelligent Access Keys (If Equipped)

This feature helps to prevent you from locking yourself out of your vehicle if your key is still in your vehicle.

When you lock your vehicle using the power door lock control (with the door open, vehicle in park (P) and ignition off), your vehicle will search for an intelligent access key in the passenger compartment after you close the door. If your vehicle finds a key, all of the doors will immediately unlock and the horn will sound, indicating that a key is inside.

In order to override the smart unlock feature and intentionally lock the intelligent access key inside your vehicle, you can lock your vehicle after all doors are closed by pressing the lock button on another intelligent access key or touching the locking area on the handle with another intelligent access key in your hand.

When you open one of the front doors and lock your vehicle using the power door lock control, all doors will lock then unlock if:

- The ignition is on.
- The ignition is off and the transmission is not in park (P).

Auto Lock Feature

The auto lock feature will lock the doors and liftgate when all of the following conditions have been met:

- All doors are closed.
- The ignition is on.
- Your vehicle is moving at a speed greater than 12 mph (20 km/h) for more than two seconds.

Enabling or Disabling Auto Lock

Note: *You cannot disable the auto lock feature in some markets.*

Note: *See an authorized dealer to enable or disable the auto lock feature or carry out the following procedure.*

Note: *You will have 30 seconds to complete the procedure.*

1. Switch the ignition on.

Information Provided by:
DEALER E-PROCESS

2. Press the power door lock button three times.
3. Switch the ignition off.
4. Press the power door lock button three times.
5. Switch the ignition on. The system alerts you with a tone to indicate your vehicle is in programming mode.
6. Press the power door lock button for more than two seconds and release.

A tone sounds to confirm the change.

After programming the feature, switch the ignition off to exit the programming mode.

Auto Unlock Feature

The auto unlock feature will unlock all the doors when all of the following conditions have been met:

- The ignition is on, all doors are closed, and your vehicle is moving at a speed greater than 12 mph (20 km/h) for more than two seconds.
- Your vehicle has come to a stop and you switch the ignition off or to the accessory position.
- The driver door is opened within 10 minutes of you switching the ignition off or to the accessory position.

Note: *The doors will not auto unlock if your vehicle has been electronically locked after the ignition is switched off and before the driver door is opened.*

Enabling or Disabling Auto Unlock

Note: *See an authorized dealer to enable or disable the auto unlock feature or carry out the following procedure.*

Note: *You will have 30 seconds to complete the procedure.*

1. Switch the ignition on.
2. Press the power door lock button three times.
3. Switch the ignition off.
4. Press the power door lock button three times.
5. Switch the ignition on. The system alerts you with a tone to indicate your vehicle is in programming mode.
6. Press the power door lock button for less than one second and release.

A tone sounds to confirm the change.

After programming the feature, switch the ignition off to exit the programming mode.

Emergency Locking With the Key

Note: *If the child safety locks are on and you pull the interior handle, you will only turn off the emergency locking, not the child safety lock. You can only open the doors using the external door handle.*

Note: *If the doors have been unlocked using this method, the doors must be locked individually until the central locking function has been repaired.*

Note: *When the central locking function fails to operate, lock the doors individually using the key in the position shown.*

Information Provided by:
DEALER E-PROCESS

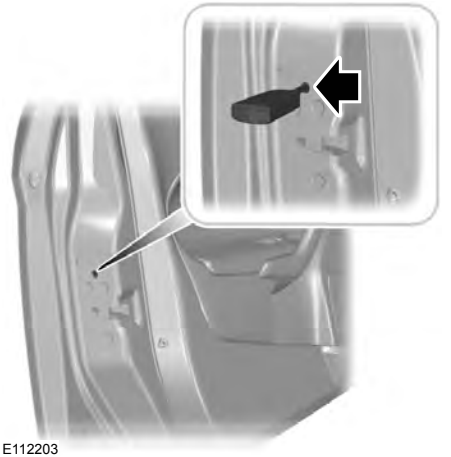

E112203

Left-Hand Side

Turn clockwise to lock.

Right-Hand Side

Turn counterclockwise to lock.

MANUAL LIFTGATE

WARNINGS

It is extremely dangerous to ride in a cargo area, inside or outside of your vehicle. In a crash, people riding in these areas are more likely to be seriously injured or killed. Do not allow people to ride in any area of your vehicle that is not equipped with seats and safety belts. Make sure everyone in your vehicle is in a seat and properly using a safety belt. Failure to follow this warning could result in serious personal injury or death.

WARNINGS

Make sure to close and latch the liftgate to prevent drawing exhaust fumes into your vehicle. This will also prevent passengers and cargo from falling out. If you must drive with the liftgate open, keep the vents or windows open so outside air comes into your vehicle. Failure to follow this warning could result in serious personal injury.

Note: *Be careful when opening or closing the liftgate in a garage or other enclosed area to avoid damaging the liftgate.*

Note: *Do not hang anything, for example a bike rack, from the glass or liftgate. This could damage the liftgate and its components.*

Note: *Do not leave the liftgate open when driving. This could damage the liftgate and its components.*

Opening and Closing the Liftgate

To Open the Liftgate

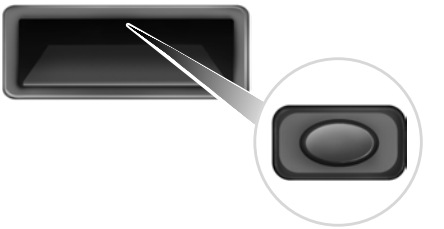

E138632

Press the button located in the top of the liftgate pull cup handle to unlatch the liftgate, then pull on the outside handle.

Information Provided by: DEALER E-PROCESS

Opening With the Remote Control

Press the button twice within three seconds.

To Close the Liftgate

E89132

A recessed grip is located inside the liftgate to help with closing.

KEYLESS ENTRY

General Information

WARNING

The system may not function if the key is close to metal objects or electronic devices such as cell phones.

The system will not function if:

- Your vehicle battery has no charge.
- The passive key frequencies are jammed.
- The passive key battery has no charge.

Note: *If the system does not function, you will need to use the key blade to lock and unlock your vehicle.*

The system allows you to operate your vehicle without the use of a key or remote control.

E78276

Passive locking and unlocking requires a valid passive key to be located within one of the three external detection ranges. These are located approximately 4.9 ft (1.5 m) from the front door handles and the liftgate.

Passive Key

Your vehicle can be locked and unlocked with the passive key. You can use the passive key as a remote control. See **Locking and Unlocking** (page 55).

Locking Your Vehicle

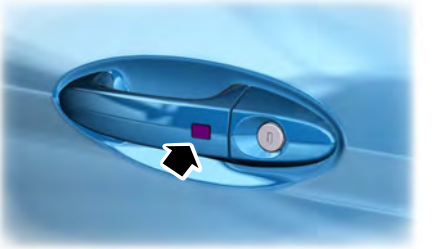

E87384

Information Provided by: DEALER E-PROCESS

WARNING

Your vehicle does not lock itself automatically. If you do not press a locking button your vehicle will remain unlocked.

Locking buttons are located on each of the front doors.

For central locking and to arm the alarm, press a locking button once.

Note: *Your vehicle will remain locked for approximately three seconds. When the delay period is over, you can open the doors again, provided the passive key is within the respective detection range.*

When you lock your vehicle, the direction indicators will flash to confirm your vehicle has locked and the alarm is armed.

Liftgate

Note: *The liftgate cannot be closed and will pop back up with a warning chime if the passive key is located inside the vehicle with the doors locked.*

Note: *If a second valid passive key is located within the liftgate detection range, the liftgate can be closed.*

Unlocking Your Vehicle

Note: *When your vehicle remains locked for longer than three days, the system will enter an energy-saving mode. This is to prevent your vehicle battery running out of charge. When your vehicle is unlocked while in this mode, the reaction time of the system may be a little longer than normal. To exit the energy-saving mode, unlock your vehicle.*

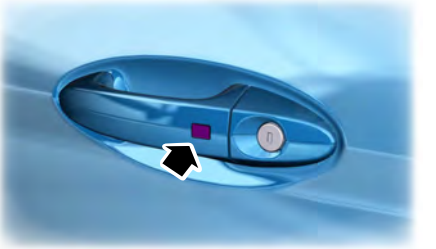

E87384

Press a locking button once.

Note: *A valid passive key must be located within the detection range of that door.*

When you unlock your vehicle, the direction indicators will flash to confirm your vehicle has unlocked and the alarm has disarmed.

Unlocking Only the Driver Door

You can program the system so that only the driver door is unlocked. See **Remote Control** (page 45).

If the unlocking function is reprogrammed so that only the driver door and the liftgate are unlocked the following will occur:

- If the driver door is the first door opened, all the other doors will remain locked. All the other doors can be unlocked from inside your vehicle by pressing the unlock button on the instrument panel.

Disabled Keys

Any keys left inside your vehicle interior when it is locked will be disabled.

You cannot use a disabled key to switch the ignition on or start the engine.

You must enable all passive keys again in order to use them.

To enable all your passive keys, unlock your vehicle using a passive key or the remote control unlocking function.

Information Provided by: DEALER E-PROCESS

All passive keys will then be enabled if you switch the ignition on or you start your vehicle with a valid key.

Locking and Unlocking the Doors With the Key Blade

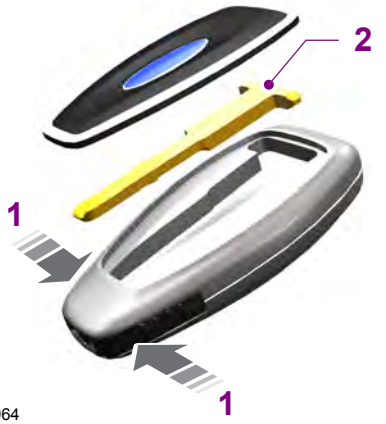

E87964

1. Carefully remove the cover.
2. Remove the key blade and insert it into the lock.

Note: *Only the driver door handle has a lock cylinder.*

INTERIOR LUGGAGE COMPARTMENT RELEASE (If Equipped)

WARNINGS

Keep vehicle doors and luggage compartment locked and keep keys and remote transmitters out of a child's reach. Unsupervised children could lock themselves in the trunk and risk injury. Children should be taught not to play in vehicles.

WARNINGS

Do not leave children or animals unattended in the vehicle. On hot days, the temperature in the trunk or vehicle interior can rise very quickly. Exposure of people or animals to these high temperatures for even a short time can cause death or serious heat-related injuries, including brain damage. Small children are particularly at risk.

Your vehicle is equipped with a release handle that provides a means of escape for children and adults if they become locked inside the luggage compartment.

Adults should familiarize themselves with the operation and location of the release handle.

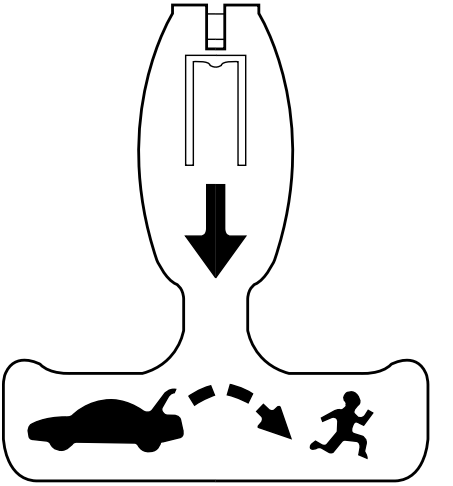

E144403

Information Provided by:
DEALER E-PROCESS

The handle is located inside the luggage compartment either on the luggage compartment door (lid) or near the tail lamps. It is composed of a material that will glow for hours in darkness following brief exposure to ambient light.

Pull the handle and push up on the luggage compartment door (lid) to open from within the luggage compartment.

Information Provided by:
DEALER E-PROCESS

PASSIVE ANTI-THEFT SYSTEM

Note: *The system is not compatible with non-Ford aftermarket remote start systems. Use of these systems may result in vehicle starting problems and a loss of security protection.*

Note: *Metallic objects, electronic devices or a second coded key on the same key chain may cause vehicle starting problems if they are too close to the key when starting the engine. Prevent these objects from touching the coded key while starting the engine. Switch the ignition off, move all objects on the key chain away from the coded key and restart the engine if a problem occurs.*

Note: *Do not leave a duplicate coded key in the vehicle. Always take your keys and lock all doors when leaving the vehicle.*

SecuriLock®

The system is an engine immobilization system. It is designed to help prevent the engine from being started unless a coded key programmed to your vehicle is used. Using the wrong key may prevent the engine from starting. A message may appear in the information display.

If you are unable to start the engine with a correctly coded key, a malfunction has happened and a message may appear in the information display.

Automatic Arming

The vehicle arms immediately after you switch the ignition off.

Automatic Disarming

Switching the ignition on with a coded key disarms the vehicle.

Replacement Keys

Note: *Your vehicle comes equipped with two integrated keyhead transmitters or two intelligent access keys.*

The integrated keyhead transmitter functions as a programmed ignition key that operates all the locks and starts the vehicle, as well as a remote control.

The intelligent access key functions as a programmed key that operates the driver door lock and activates the intelligent access with push button start system, as well as a remote control.

If your programmed transmitters or standard SecuriLock coded keys (integrated keyhead transmitters only) are lost or stolen and you do not have an extra coded key, you will need to have your vehicle towed to an authorized dealer. You need to erase the key codes from your vehicle and program new coded keys.

Store an extra programmed key away from the vehicle in a safe place to help prevent any inconveniences. See your authorized dealer to purchase additional spare or replacement keys.

Programming a Spare Integrated Keyhead Transmitter

Note: *You can program a maximum of eight coded keys to your vehicle. All eight can be integrated keyhead transmitters.*

You can program your own integrated keyhead transmitter or standard SecuriLock coded keys to your vehicle. This procedure only programs the engine immobilizer keycode to your vehicle.

Note: *You can also program the remote entry portion of the integrated keyhead transmitter to your vehicle. See* ***Remote Control*** *(page 45).*

Only use integrated keyhead transmitters or standard SecuriLock keys.

Information Provided by: DEALER E-PROCESS

You must have two previously programmed coded keys and the new unprogrammed key readily accessible. See your authorized dealer to have the spare key programmed if two previously programmed coded keys are not available.

Read and understand the entire procedure before you begin.

1. Insert the first previously programmed coded key into the ignition.
2. Switch the ignition from off to on. Keep the ignition on for at least three seconds, but no more than 10 seconds.
3. Switch the ignition off and remove the first coded key from the ignition.
4. After three seconds but within 10 seconds of switching the ignition off, insert the second previously coded key into the ignition.
5. Switch the ignition from off to on. Keep the ignition on for at least three seconds, but no more than 10 seconds.
6. Switch the ignition off and remove the second previously programmed coded key from the ignition.
7. After three seconds but within 10 seconds of switching the ignition off and removing the previously programmed coded key, insert the new unprogrammed key into the ignition.
8. Switch the ignition from off to on. Keep the ignition on for at least six seconds.
9. Remove the newly programmed coded key from the ignition.

If the key has been successfully programmed it will start the engine and operate the remote entry system (if the new key is an integrated keyhead transmitter).

If programming was not successful, wait 10 seconds and repeat Steps 1 through 8. If you are still unsuccessful, take your vehicle to your authorized dealer.

Programming a Spare Intelligent Access Key

See your authorized dealer to have additional keys programmed to your vehicle.

ANTI-THEFT ALARM

Alarm System

The perimeter alarm is a deterrent against unauthorized access to your vehicle through the doors and the hood. It also protects the audio unit.

Triggering the Alarm

Once armed, the alarm is triggered in any of the following ways:

- If someone opens a door, the liftgate or the hood without a valid key or remote control.
- If someone removes the audio or navigation system.
- If you switch the ignition on without a valid key.

If the alarm is triggered, the alarm horn will sound for 30 seconds and the hazard warning flasher will flash for five minutes.

Any further attempts to perform one of the above will trigger the alarm again.

Arming the Alarm

To arm the alarm, lock your vehicle. See **Locks** (page 55).

Disarming the Alarm

Vehicles Without Keyless Entry

Disarm and silence the alarm by unlocking the doors with the key and switching the ignition on with a correctly coded key or unlocking the doors with the remote control.

Information Provided by: DEALER E-PROCESS

Vehicles with Keyless Entry

Note: *A valid passive key must be located within the detection range of that door for keyless entry. See* ***Keyless Entry*** *(page 59).*

Disarm and silence the alarm by unlocking the doors and switching the ignition on or unlocking the doors with the remote control.

Information Provided by:
DEALER E-PROCESS

ADJUSTING THE STEERING WHEEL

WARNING

Do not adjust the steering wheel when your vehicle is moving.

Note: *Make sure that you are sitting in the correct position. See* ***Sitting in the Correct Position*** *(page 103).*

E95178

1. Unlock the steering column.
2. Adjust the steering wheel to the desired position.

E95179

3. Lock the steering column.

AUDIO CONTROL (If Equipped)

Select the required source on the audio unit.

Information Provided by:
DEALER E-PROCESS

You can operate the following functions with the control:

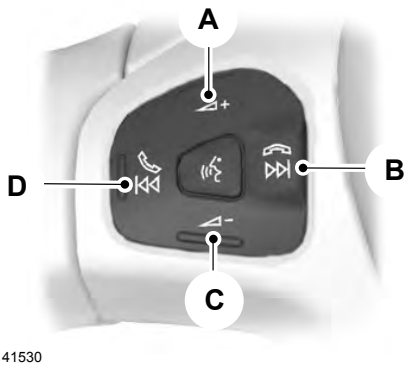

E141530

A	Volume up
B	Seek up, next or end call
C	Volume down
D	Seek down, previous or accept call

Seek, Next or Previous

Press the seek button to:

- tune the radio to the next or previous stored preset
- play the next or the previous track.

Press and hold the seek button to:

- tune the radio to the next station up or down the frequency band
- seek through a track.

VOICE CONTROL (If Equipped)

E141533

Press the button to select or deselect voice control. See **SYNC™** (page 267).

CRUISE CONTROL (If Equipped)

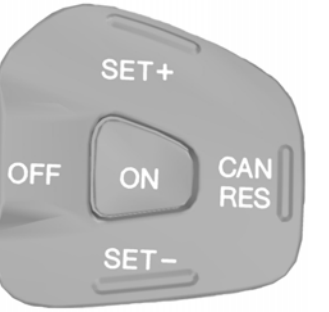

E141961

See **Cruise Control** (page 140).

Information Provided by:
DEALER E-PROCESS

WINDSHIELD WIPERS

Note: *Fully defrost the windshield before you switch the windshield wipers on.*

Note: *Make sure you switch the windshield wipers off before entering a car wash.*

Note: *If you use a car wash with a waxing cycle, make sure that you remove the wax from the windshield and the wiper blades.*

Note: *If streaks or smears appear on the windshield, clean the windshield and the wiper blades. See* ***Checking the Wiper Blades*** *(page 187).*

If that does not resolve the issue, install new wiper blades. See ***Changing the Wiper Blades*** *(page 187).*
Note: *Do not operate the wipers on a dry windshield. This may scratch the glass, damage the wiper blades or cause the wiper motor to burn out. Always use the windshield washers before wiping a dry windshield.*

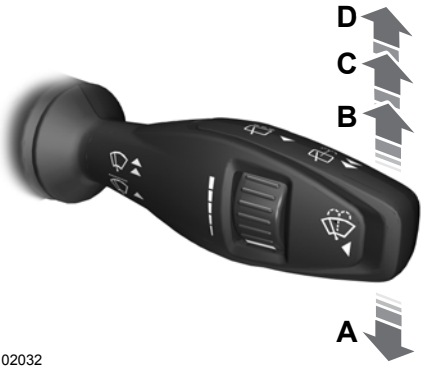

E102032

A	Single wipe
B	Intermittent wipe
C	Normal wipe
D	High speed wipe

Note: *If you press and hold the wiper lever in position A, the wipers will continue to wipe until you release the wiper lever.*

Intermittent Wipe

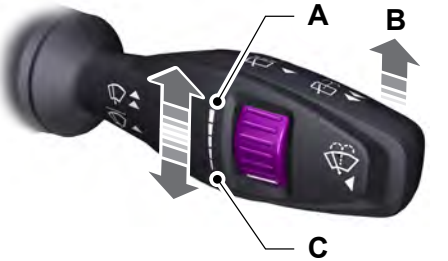

E102033

A	Short wipe interval
B	Intermittent wipe
C	Long wipe interval

Use the rotary control to adjust the intermittent wipe interval.

Speed Dependent Wipers

When your vehicle speed increases, the interval between wipes decreases.

WINDSHIELD WASHERS

Note: *Do not operate the washers when the washer reservoir is empty. This may cause the washer pump to overheat.*

E102051

Information Provided by:
DEALER E-PROCESS

Push the button to operate the washers. When you release the button, the wipers will operate for a short time.

REAR WINDOW WIPER AND WASHERS

Intermittent Wipe

E102052

Pull the lever toward you.

Reverse Gear Wipe

The rear wiper will turn on automatically when selecting reverse gear if:

- the rear wiper is not already switched on
- the wiper lever is in position A, B, C or D
- the front wiper is operating (when set to position B).

Rear Window Washer

Note: *Do not operate the washers when the washer reservoir is empty. This may cause the washer pump to overheat.*

E102053

Pull the lever toward you to operate the washers. They will operate for a maximum of 10 seconds. When you release the lever, the wiper will operate for a short time.

Information Provided by:
DEALER E-PROCESS

GENERAL INFORMATION

Condensation in Lamp Assemblies

Exterior lamps have vents to accommodate normal changes in air pressure.

Condensation can be a natural by-product of this design. When moist air enters the lamp assembly through the vents, there is a possibility that condensation can occur when the temperature is cold. When normal condensation occurs, a fine mist can form on the interior of the lens. The fine mist eventually clears and exits through the vents during normal operation.

Clearing time may take as long as 48 hours under dry weather conditions.

Examples of acceptable condensation are:

- The presence of a fine mist (no streaks, drip marks or large droplets).
- A fine mist covers less than 50% of the lens.

Examples of unacceptable condensation are:

- A water puddle inside the lamp.
- Streaks, drip marks or large droplets present on the interior of the lens.

If you see any unacceptable condensation, have your vehicle checked by an authorized dealer.

LIGHTING CONTROL

Lighting Control Positions

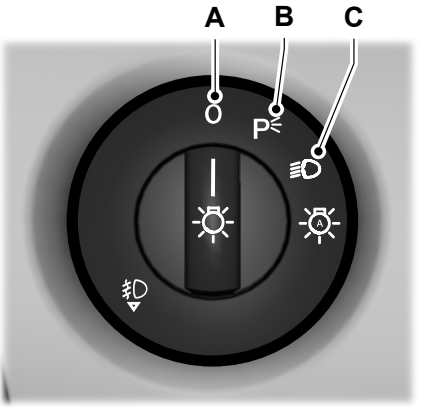

E156651

A	Off
B	Parking lamps, instrument panel lamps, license plate lamps and tail lamps
C	Headlamps

Parking Lamps

Note: *Prolonged use of the parking lamps when the ignition is off will cause the battery to run out of charge.*

To operate the parking lamps turn the lighting control to position B. The parking lamps operate with the ignition on or off.

Information Provided by:
DEALER E-PROCESS

High Beams

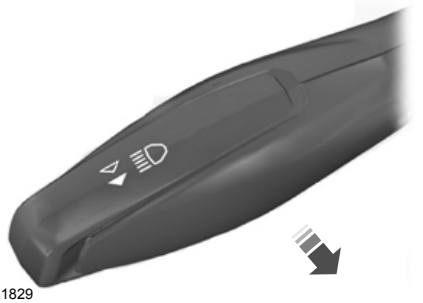

E101829

Pull the lever fully toward you to switch the high beams on.

Pull the lever fully toward you again to switch the high beams off.

Headlamp Flasher

Pull the lever toward you slightly and release it to flash the headlamps.

AUTOLAMPS (If Equipped)

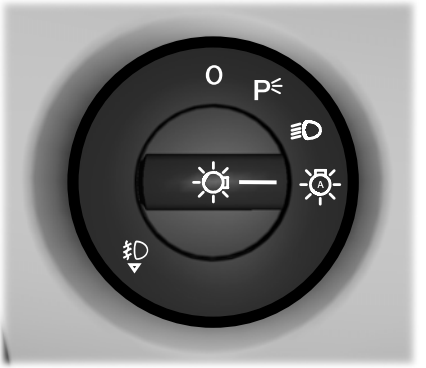

E158778

When the lighting control is in the autolamps position, the headlamps automatically turn on in low light situations or when the wipers turn on.

The headlamps will remain on for a period of time after you switch the ignition off. Use the information display controls to adjust the period of time that the headlamps remain on. See **Information Displays** (page 84).

Note: *If you switch autolamps on, you can only switch the high beam headlamps on when the autolamps turn the headlamps on.*

Windshield Wiper Activated Headlamps

The windshield wiper activated headlamps turn on within 10 seconds when you switch the windshield wipers on and the lighting control is in the autolamps position. They turn off approximately 60 seconds after you switch the windshield wipers off.

The headlamps do not turn on by wiper activation:

- During a single wipe.
- When the wipers are on to clear washer fluid during a wash condition.

Note: *If you switch autolamps and autowipers on, the headlamps will automatically turn on when the windshield wipers continuously operate.*

Information Provided by:
DEALER E-PROCESS

INSTRUMENT LIGHTING DIMMER

E156652

HEADLAMP EXIT DELAY

After you switch the ignition off, you can switch the headlamps on by pulling the direction indicator lever toward you. You will hear a short tone. The headlamps will switch off automatically after three minutes with any door open or 30 seconds after the last door has been closed. You can cancel this feature by pulling the direction indicator toward you again or switching the ignition on.

DAYTIME RUNNING LAMPS (If Equipped)

WARNING

The daytime running lamps system does not activate the rear lamps and may not provide adequate lighting during low visibility driving conditions. Also, the autolamps switch position may not activate the headlamps in all low visibility conditions, such as daytime fog. Make sure the headlamps are switched to auto or on, as appropriate, during all low visibility conditions. Failure to do so may result in a crash.

The system switches the headlamps on in daylight conditions.

To switch the system on:

1. Switch the ignition on.
2. Turn the lighting control to the off, autolamp or parking lamp position.
3. Make sure the transmission selector lever is not in position **P**.

Information Provided by: DEALER E-PROCESS

FRONT FOG LAMPS (If Equipped)

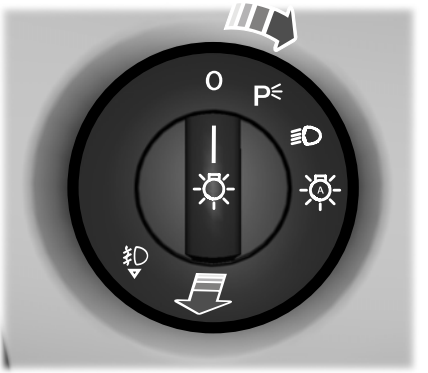

E156823

Pull the control to switch the fog lamps on or off.

You cannot switch the fog lamps on when the lighting control is in the off or autolamps position.

DIRECTION INDICATORS

E102016

Push the lever up or down to use the direction indicators.

Note: *Tap the lever up or down to make the direction indicators flash three times to indicate a lane change.*

INTERIOR LAMPS

Front Interior Lamps

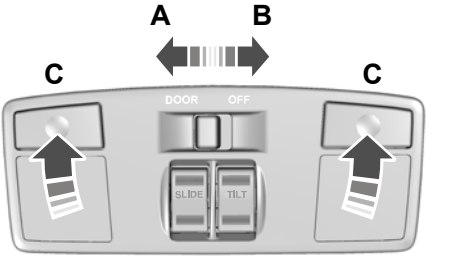

E156878

A	Door contact
B	Off
C	Reading lamps

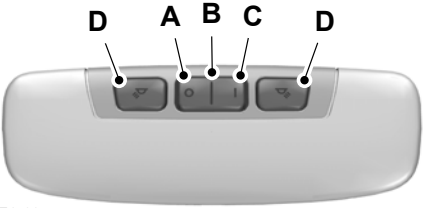

E170657

A	Off
B	Door contact
C	On
D	Reading lamps

Information Provided by:
DEALER E-PROCESS

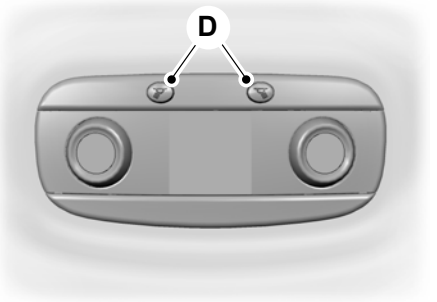

E170600

D Reading lamps.

When the switch is set to the door contact position, the courtesy lamp will illuminate when you unlock or open a door or the liftgate. If you leave a door open with the ignition switched off, the courtesy lamp will go off automatically after some time to prevent your vehicle battery from losing charge. To switch it back on, switch the ignition on for a short time.

The courtesy lamp will also illuminate when you switch the ignition off. It will go off automatically after a short time or when you start the engine.

Reading Lamps

If you switch the ignition off, the reading lamps will go off automatically after some time to prevent your vehicle battery from losing charge. To switch them back on, switch the ignition on for a short time.

Rear Interior Lamps (If Equipped)

Press to switch individual lamps on and off.

AMBIENT LIGHTING (If Equipped)

The ambient lighting system illuminates the interior with a choice of several colors. The ambient lighting control is located on the instrument panel.

E158830

Press and release the switch to cycle through the color choices and the off condition.

The ambient lighting will switch on when you switch the ignition on.

The ambient lighting will remain on until you switch the ignition off and one of the following conditions have been met:

- You lock your vehicle.
- The accessory delay timer expires.

Information Provided by:
DEALER E-PROCESS

POWER WINDOWS (If Equipped)

WARNINGS

Do not leave children unattended in your vehicle and do not let them play with the power windows. They may seriously injure themselves.

When closing the power windows, you should verify they are free of obstructions and make sure that children and pets are not in the proximity of the window openings.

E70848

Press the control to open the window.

Lift the control to close the window.

Note: *You may hear a pulsing noise when just one of the windows is open. Lower the opposite window slightly to reduce this noise.*

One-Touch Down (If Equipped)

Press the control fully and release it. Press again or lift it to stop the window.

One-Touch Up (If Equipped)

Lift the control fully and release it. Press or lift it again to stop the window.

Window Lock

E70850

Press the control to lock or unlock the rear window controls. It lights when the rear window controls lock.

Bounce-Back (If Equipped)

The window stops automatically while closing. It reverses some distance if there is an obstacle in the way.

Overriding the Bounce-Back Feature

WARNING

When you override the bounce-back feature the window will not reverse if it detects an obstacle. Take care when closing the windows to avoid personal injury or damage to your vehicle.

Proceed as follows to override this protection feature when there is a resistance, for example in winter:

Information Provided by: DEALER E-PROCESS

1. Close the window twice until it reaches the point of resistance and let it reverse.
2. Close the window a third time to the point of resistance. You disabled the bounce-back feature and you can now close the window manually. The window travels past the point of resistance and you can close it fully.

Contact an authorized dealer as soon as possible if the window does not close after the third attempt.

Resetting the Bounce-Back Feature

WARNING

The bounce-back feature remains turned off until you reset the memory.

If you have disconnected the battery, you must reset the bounce-back memory separately for each window.

1. Lift and hold the control until the window is fully closed.
2. Release the control.
3. Lift and hold the control again for a few seconds.
4. Release the control.
5. Lift and hold the control again for a few seconds.
6. Release the control.
7. Press and hold the control until the window is fully open.
8. Lift and hold the control until the window is fully closed.
9. Release the control.
10. Open the window and then try to close it automatically.
11. Repeat the procedure if the window does not close automatically.

Accessory Delay (If Equipped)

You can use the window controls for several minutes after switching off the ignition or until opening either front door.

EXTERIOR MIRRORS

Power Exterior Mirrors

WARNING

Do not adjust the mirrors when your vehicle is moving. This could result in the loss of control of your vehicle, serious personal injury or death.

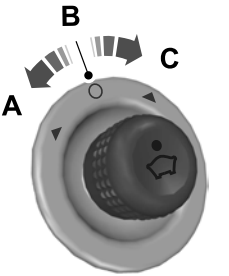

E71280

A	Left-hand mirror
B	Off
C	Right-hand mirror

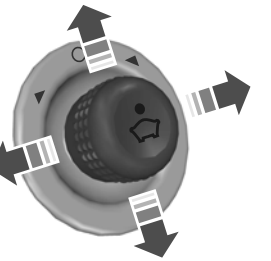

E71281

Information Provided by:
DEALER E-PROCESS

Move the controller in the direction of the arrows to adjust the mirror.

Fold-Away Exterior Mirrors

Push the mirror toward the door window glass. Make sure that you fully engage the mirror in its support when returning it to its original position.

Integrated Blind Spot Mirrors (If Equipped)

WARNING

Objects in the blind spot mirror are closer than they appear.

Blind spot mirrors have an integrated convex mirror built into the upper outboard corner of the exterior mirrors. They are designed to increase your visibility along the side of your vehicle.

Check the main mirror first before a lane change, then check the blind spot mirror. If no vehicles are present in the blind spot mirror and the traffic in the adjacent lane is at a safe distance, signal that you intend to change lanes. Glance over your shoulder to verify traffic is clear and carefully change lanes.

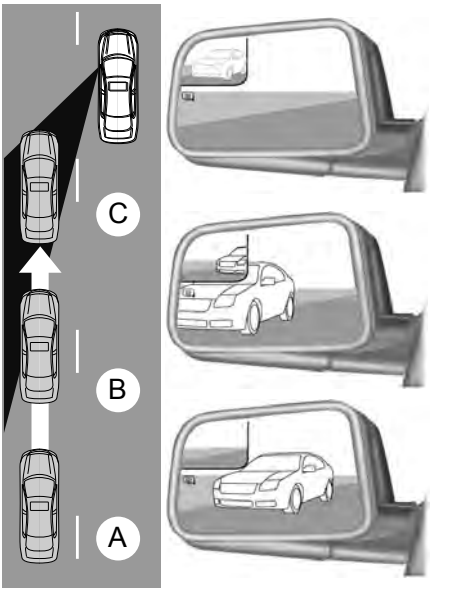

E138665

The image of the approaching vehicle is small and near the inboard edge of the main mirror when it is at a distance. The image becomes larger and begins to move outboard across the main mirror as the vehicle approaches (A). The image will transition from the main mirror and begin to appear in the blind spot mirror as the vehicle approaches (B). The vehicle will transition to your peripheral field of view as it leaves the blind spot mirror (C).

INTERIOR MIRROR

WARNING

Do not adjust the mirror when your vehicle is moving.

Information Provided by:
DEALER E-PROCESS

Note: *Do not clean the housing or glass of any mirror with harsh abrasives, fuel or other petroleum or ammonia-based cleaning products.*

You can adjust the interior mirror to your preference. Some mirrors also have a second pivot point. This lets you move the mirror head up or down and from side to side.

Pull the tab below the mirror toward you to reduce glare at night.

Auto-Dimming Mirror (If Equipped)

Note: *Do not block the sensors on the front and back of the mirror. Mirror performance may be affected. A rear center passenger or raised rear center head restraint may also block light from reaching the sensor.*

The mirror will dim automatically to reduce glare when bright lights are detected from behind your vehicle. It will automatically return to normal reflection when you select reverse gear to make sure you have a clear view when backing up.

MOONROOF (If Equipped)

WARNINGS

Do not let children play with the moonroof or leave them unattended in the vehicle. They may seriously hurt themselves.

When closing the moonroof, you should verify that it is free of obstructions and make sure that children and pets are not in the proximity of the roof opening.

The moonroof controls are located on the overhead console.

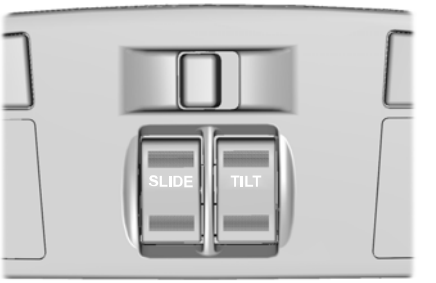

E156620

Opening and Closing the Moonroof

Press and release the rear of the **SLIDE** control to open the moonroof. The sliding shade will automatically open, if closed, while the moonroof opens.

Press and hold the front of the **SLIDE** control to close the moonroof.

Note: *The sliding shade will not automatically close.*

Moonroof Sliding Shade

You can manually open or close the sliding shade when the moonroof is closed. Slide the shade backward or forward to open or close it.

Venting the Moonroof

Press and hold the rear of the **TILT** control to vent the moonroof.

Press and hold the front of the **TILT** control to close the moonroof.

Information Provided by:
DEALER E-PROCESS

GAUGES

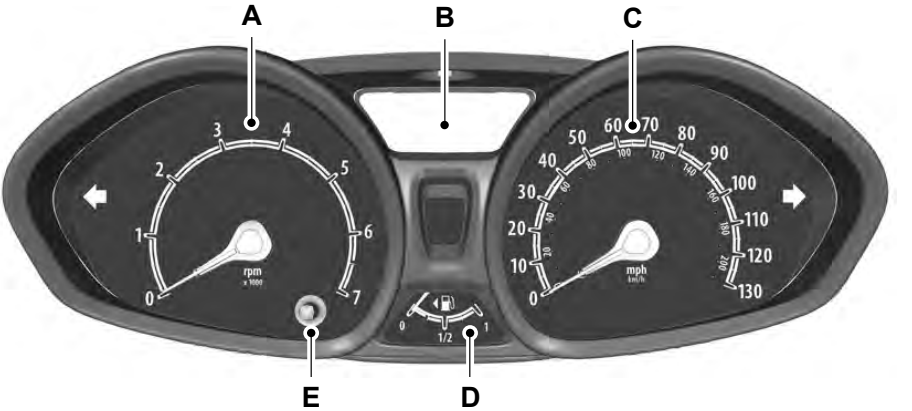

E102660

A Tachometer

B Information display and engine coolant temperature gauge

C Speedometer

D Fuel gauge

E Tripmeter reset button

Compass (If Equipped)

Displays the vehicle's heading direction.

To calibrate and set the compass zone use the information display menu. See **Information Displays** (page 84).

Use the diagram to determine your magnetic zone.

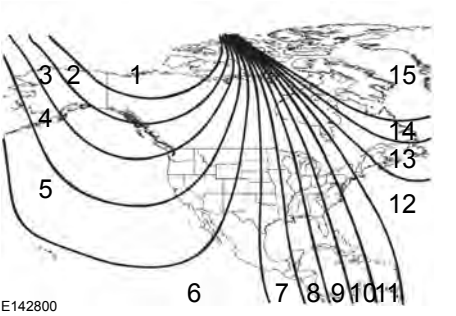

E142800

Information Provided by:
DEALER E-PROCESS

Engine Coolant Temperature Gauge

E140760

Displays the temperature of the engine coolant. At normal operating temperature the indicator will remain in the center section.

Fuel Gauge

Switch the ignition on. The fuel gauge will indicate approximately how much fuel is left in the fuel tank. The fuel gauge may vary slightly when your vehicle is moving or on a gradient. The arrow adjacent to the fuel pump symbol indicates on which side of your vehicle the fuel filler door is located.

Low Fuel Reminder

Vehicles with Trip Computer

A low fuel level reminder displays and sounds when the distance to empty reaches 75 mi (120 km) for MyKey and 50 mi (80 km) for all other keys.

Note: *The low fuel reminder can appear at different fuel gauge positions depending on fuel economy conditions. This variation is normal.*

Vehicles without Trip Computer

A low fuel level reminder displays and sounds when the fuel gauge needle is at 1/16th.

WARNING LAMPS AND INDICATORS

The following warning lamps and indicators alert you to a vehicle condition that may become serious. Some lamps will illuminate when you start your vehicle to make sure they work. If any lamps remain on after starting your vehicle, refer to the respective system warning lamp for further information.

Note: *Some warning indicators appear in the information display and function the same as a warning lamp but do not illuminate when you start your vehicle.*

Anti-lock Braking System Warning Lamp

If it illuminates when you are driving, this indicates a malfunction.

You will continue to have the normal braking system (without anti-lock braking system) unless the brake system warning lamp is also illuminated.

Have your vehicle checked by an authorized dealer.

Brake System Warning Lamp

It illuminates when you engage the parking brake and the ignition is on. If it illuminates when your vehicle is moving, make sure the parking brake is disengaged. If the parking brake is disengaged, this indicates low brake fluid level or a brake system fault.

Have your vehicle checked immediately by an authorized dealer.

Information Provided by:
DEALER E-PROCESS

WARNING

Driving your vehicle with the warning lamp on is dangerous. A significant decrease in braking performance may occur. It will take you longer to stop your vehicle. Have your vehicle checked by your authorized dealer immediately. Driving extended distances with the parking brake engaged can cause brake failure and the risk of personal injury.

Cruise Control Indicator

It will illuminate when you switch this feature on. See **Using Cruise Control** (page 140).

Direction Indicator

Illuminates when the left or right turn signal or the hazard warning flasher is turned on. If the indicators stay on or flash faster, check for a burnt out bulb. See **Changing a Bulb** (page 195).

Door Ajar Warning Lamp

Illuminates when you switch the ignition on and remains on if any door, the hood or the liftgate is not closed properly.

Engine Coolant Temperature Warning Lamp

WARNING

Do not resume your journey if it illuminates despite the level being correct. Have your vehicle checked by a an authorized dealer immediately.

If it stays on after starting or illuminates when driving, this indicates a malfunction.

Stop your vehicle as soon as it is safe to do so and switch the engine off.

Check the coolant level. See **Engine Coolant Check** (page 184).

Engine Oil Warning Lamp

WARNING

Do not resume your journey if it illuminates despite the level being correct. Have your vehicle checked by an authorized dealer immediately.

If it illuminates with the engine running or when you are driving, this indicates a malfunction.

Stop your vehicle as soon as it is safe to do so and switch the engine off.

Check the engine oil level. See **Engine Coolant Check** (page 184).

Front Airbag Warning Lamp

If it fails to illuminate when you start your vehicle, continues to flash or remains on, it indicates a malfunction. Have your vehicle checked by an authorized dealer.

Front Fog Lamps Indicator

It will illuminate when you switch the front fog lamps on.

Headlamp Indicator

It will illuminate when you switch the headlamp dipped beam or the side and tail lamps on.

Information Provided by: DEALER E-PROCESS

High Beam Indicator

It will illuminate when you switch the high beam headlamps on. It will flash when you use the headlamp flasher.

Ignition Warning Lamp

If it illuminates when you are driving, this indicates a malfunction.

Switch off all unnecessary electrical equipment.

Have your vehicle checked by an authorized dealer immediately.

Information Indicator

It will illuminate when a new message is stored in the information and entertainment display. See **Information Messages** (page 88).

Low Fuel Level Warning Lamp

If it illuminates, refuel as soon as possible.

Low Tire Pressure Warning

It will illuminate when your tire pressure is low. If the lamp remains on with the engine running or when driving, check your tire pressure as soon as possible.

It will also illuminate momentarily when you switch the ignition on to confirm the lamp is functional. If it does not illuminate when you switch the ignition on, or begins to flash at any time, have your vehicle checked by an authorized dealer.

Safety Belt Minder Warning Lamp

It will illuminate and a chime will sound to remind you to fasten your safety belt. See **Safety Belt Minder** (page 32).

Service Engine Soon

If the service engine soon indicator light stays illuminated after the engine is started, it indicates that the On-Board Diagnostics (OBD-II) system has detected a malfunction of the vehicle emissions control system. Refer to On-Board Diagnostics (OBD-II) in the Fuel and Refueling chapter for more information about having your vehicle serviced. See **Emission Control System** (page 120).

If the light is blinking, engine misfire is occurring which could damage your catalytic converter. Drive in a moderate fashion (avoid heavy acceleration and deceleration) and have your vehicle serviced immediately.

WARNING

Under engine misfire conditions, excessive exhaust temperatures could damage the catalytic converter, the fuel system, interior floor coverings or other vehicle components, possibly causing a fire. Have an authorized dealer service your vehicle immediately.

The service engine soon indicator light illuminates when the ignition is first turned on prior to engine start to check the bulb and to indicate whether the vehicle is ready for Inspection/Maintenance (I/M) testing.

Information Provided by:
DEALER E-PROCESS

Normally, the service engine soon light will stay on until the engine is cranked, then turn itself off if no malfunctions are present. However, if after 15 seconds the service engine soon light blinks eight times, it means that the vehicle is not ready for I/M testing. See **Emission Control System** (page 120).

Shift Indicator (If Equipped)

It will illuminate to inform you that shifting to a higher gear may give better fuel economy and lower CO2 emissions. It will not illuminate during periods of high acceleration, braking or when the clutch pedal is pressed.

Stability Control Indicator

While driving, it flashes when the system is operating. After you switch the ignition on, if it does not illuminate or illuminates continuously while driving, this indicates a malfunction. During a malfunction, the system switches off. Have your vehicle checked by an authorized dealer as soon as possible.

Stability Control System Off Indicator

It will illuminate when you switch the system off. It will go out when you switch the system back on or when you switch the ignition off.

AUDIBLE WARNINGS AND INDICATORS

Exterior Lamps On

Sounds when you remove the key from the ignition and open the driver door, and you have left the headlamps or parking lamps on.

Gearshift Lever Not in Park (P)

Sounds when the driver door is open, the key is in the ignition and the gearshift lever is not in park (P).

Key in Ignition

Sounds when the driver door is open and the key is in the ignition.

Key Outside Vehicle - Vehicles With Keyless System

Sounds when you close the driver door, the key is outside your vehicle and the engine is running. The system does not detect a passive key inside your vehicle.

Parking Brake On

Sounds when the parking brake is on and your vehicle is moving. If the warning chime continues to sound when you release the parking brake, have the system checked by an authorized dealer.

Safety Belt Minder

WARNINGS

The safety belt minder remains in stand-by mode when the front safety belts have been fastened. It will sound if either safety belt is unfastened.

Do not sit on top of a fastened safety belt to prevent the safety belt minder from coming on. The occupant protection system will only provide optimum protection when you use the safety belt correctly.

Sounds when your vehicle speed exceeds the pre-determined limit and the front safety belts are unfastened. The chime will stop after a period of time.

Information Provided by: DEALER E-PROCESS

GENERAL INFORMATION

WARNING

Driving while distracted can result in loss of vehicle control, crash and injury. We strongly recommend that you use extreme caution when using any device that may take your focus off the road. Your primary responsibility is the safe operation of your vehicle. We recommend against the use of any hand-held device while driving and encourage the use of voice-operated systems when possible. Make sure you are aware of all applicable local laws that may affect the use of electronic devices while driving.

Note: *The information display will remain on for several minutes after you switch the ignition off.*

Device List

The icon changes to show the current function in use.

CD

Radio

Auxiliary input

Information Display Controls

E103626

Various systems on your vehicle can be controlled using the information display controls on your audio unit. Corresponding information is displayed in the information display.

To use the controls:

- Press the up or down arrow button to scroll through and highlight the options within a menu.
- Press the right arrow button to enter a submenu.
- Press the left arrow button to exit a submenu.
- Press and hold the left arrow button at any time to return to the main menu display.
- Press the **OK** button to choose and confirm settings or messages.

Menu Structure - Information Display

You can access the menu using the information display control.

Note: *Some options may appear slightly different or not at all if the items are optional.*

SYNC-Media allows you to access the SYNC® features.

Information Provided by:
DEALER E-PROCESS

SYNC-Phone
Dial a number
Redial
Phonebook
Call history
Speed Dial
Text messaging
BT Devices
Phone settings

Menu	
Ford EcoMode	
SYNC-Settings	Bluetooth on
	Set defaults
	Master reset
	Install on SYNC
	System info
	Voice settings
SYNC-Apps	
Navigation	Route options
	Map display
	Assistance options
	Personal data
	Reset all settings
Audio settings	Adaptive volume
	Sound
	NAV audio mixing

Information Provided by:
DEALER E-PROCESS

Menu	
	DSP settings
	DSP equalizer
	Traffic
	News
	Alt. frequency
	RDS Regional
Vehicle settings	Traction Control
	Hill start assist
	Alarm system
	Powerfold mirrors
	Indicator
	Ambient light
	Chimes
Clock settings	Auto time (GPS)
	Set time
	Set date
	Set time zone
	24-hour mode
Display settings	Measure Unit
	Language
	Dimming
MyKey	create MyKey
	Traction control
	ESC
	Speed limit
	Speed warning
	Volume limit

Information Provided by:
DEALER E-PROCESS

Menu	
	Information
	clear all MyKeys
MyKey active	Information

System Check

All active warnings will display first if applicable. The system check menu may appear different based upon equipment options and current vehicle status. Press the up or down arrow button to scroll through the list.

CLOCK

Type 1

To adjust the clock, switch the ignition on and press buttons H or M on the information and entertainment display as necessary.

Type 2

Note: *Use the information display to adjust the clock. See (page 84).*

TRIP COMPUTER (If Equipped)

E102759

Press the button to scroll through the displays.

You can reset the trip odometer, average fuel consumption and average speed.

1. Scroll to the required display.
2. Press and hold the button to reset the trip computer.

The Trip Computer Includes the Following Information Displays

Trip Odometer

MI TRIP

KM TRIP

Records the distance traveled on individual journeys.

Distance to Empty

MI TO E

KM TO E

Indicates the approximate distance your vehicle will travel on the fuel remaining in the tank. The distance to empty displayed may vary depending on driving style and road conditions.

Average Fuel Consumption

AVG MPG

AVG km/l

Indicates the average fuel consumption since the function was last reset.

Average Speed

AVG MPH

AVG km/h

Indicates the average speed since the function was last reset.

Information Provided by: DEALER E-PROCESS

Distance Odometer

MI

KM

Records the total distance traveled by your vehicle.

PERSONALIZED SETTINGS

Measure Units

To swap between imperial and metric units, scroll to this display and press the **OK** button.

Swapping between imperial and metric units will affect the following displays:

- Distance to empty.
- Average fuel consumption.
- Instantaneous fuel consumption.
- Average speed.

Switching Chimes Off

To switch chimes off, scroll to this display and press the **OK** button.

The following chimes can be switched off:

- Warning messages.
- Information messages.

INFORMATION MESSAGES

Note: *Depending on the options on your vehicle, not all of the messages will display or be available. Certain messages may be abbreviated or shortened depending upon which cluster type you have.*

E103626

Press the **OK** button to acknowledge and remove some messages from the information display. Other messages will be removed automatically after a short time.

You need to confirm certain messages before you can access the menus.

The message indicator illuminates to supplement some messages. It will be red or amber depending on the severity of the message and will remain on until the cause of the message has been rectified.

Some messages will be supplemented by a system specific symbol with a message indicator.

Airbag

Message	Message indicator	Action
Airbag malfunction Service now	Amber	Have the system checked by an authorized dealer as soon as possible.

Information Provided by: DEALER E-PROCESS

Alarm

Message	Message indicator	Action
Alarm triggered Check vehicle	Amber	See **Security** (page 63).
Interior scan deactivated	Amber	See **Security** (page 63).
Alarm system malfunction Service required	-	Have the system checked by an authorized dealer.

Doors Open

Message	Message indicator	Action
Driver door open	Red	Vehicle is moving. Stop your vehicle as soon as safely possible and close.
Driver side rear door open	Red	Vehicle is moving. Stop your vehicle as soon as safely possible and close.
Passenger door open	Red	Vehicle is moving. Stop your vehicle as soon as safely possible and close.
Passenger side rear door open	Red	Vehicle is moving. Stop your vehicle as soon as safely possible and close.
Trunk open	Red	Vehicle is moving. Stop your vehicle as soon as safely possible and close.
Hood open	Red	Vehicle is moving. Stop your vehicle as soon as safely possible and close. See **Opening and Closing the Hood** (page 177).
Driver door open	Amber	Vehicle not moving. Close.
Driver side rear door open	Amber	Vehicle not moving. Close.
Passenger door open	Amber	Vehicle not moving. Close.

Information Provided by:
DEALER E-PROCESS

Message	Message indicator	Action
Passenger side rear door open	Amber	Vehicle not moving. Close.
Trunk open	Amber	Vehicle not moving. Close.
Hood open	Amber	Vehicle not moving. Close. See **Opening and Closing the Hood** (page 177).

Engine Immobilizer

Message	Message indicator	Action
Immobilizer malfunction Service now	Red	Have the system checked by an authorized dealer as soon as possible.

Hill Start Assist

Message	Message indicator	Action
Hill start assist not available	Amber	See **Hill Start Assist** (page 129).

Keyless System

Message	Message indicator	Action
Key not detected	Amber	See **Keyless Entry** (page 59).
Key outside car	Amber	See **Keyless Entry** (page 59).
Key Battery low Replace battery	Amber	See **Remote Control** (page 45).
Switch ign. off Press ENGINE Start/ Stop button	Amber	See **Keyless Starting** (page 111).
Press brake to start	-	See **Keyless Starting** (page 111).
Press clutch to start	-	See **Keyless Starting** (page 111).
Close trunk or use spare key	-	See **Keyless Entry** (page 59).

Information Provided by: DEALER E-PROCESS

Lighting

Message	Message indicator	Action
Left indicator malfunction Change bulb	-	See **Changing a Bulb** (page 195).
Right indicator malfunction Change bulb	-	See **Changing a Bulb** (page 195).

Maintenance

Message	Message indicator	Action
Brake fluid level low Service now	Red	See **Brake Fluid Check** (page 186).
Brake system malfunction Stop safely	Red	Have the system checked by an authorized dealer immediately.
Engine malfunction Service now	Amber	Have the system checked by an authorized dealer as soon as possible.
Engine oil change due Service required	-	Have the system checked by an authorized dealer.
Paused	-	Your vehicle is still in transport mode or factory mode. Some features may not be available. See an authorized dealer.

MyKey

Message	Message indicator	Action
MyKey Vehicle at top speed	Amber	Displays when a MyKey is in use and the MyKey speed limit is on and your vehicle speed is approaching 80 mph (130 km/h).
MyKey active Drive safely	-	Displays when MyKey is active.
MyKey Speed limited to <XX> mph	-	Displays when starting your vehicle and MyKey is in use and the MyKey speed limit is on.

Information Provided by: DEALER E-PROCESS

Message	Message indicator	Action
MyKey Speed limited to <XXX> km/h	-	Displays when starting your vehicle and MyKey is in use and the MyKey speed limit is on.
MyKey check speed Drive safely	-	Displays when MyKey is active.
MyKey vehicle near top speed	-	Displays when a MyKey is in use and the MyKey speed limit is reached.
MyKey Buckle up to unmute audio	-	Displays when a MyKey is in use and Belt- Minder is activated.
MyKey Park aid cannot be deactivated	-	Displays when a MyKey is in use and park aid is activated.
MyKey ESC cannot be deactivated	-	Displays when programming a MyKey.

Parking Brake

Message	Message indicator	Action
Park brake applied	Red	See **Parking Brake** (page 132).
Park brake applied	Amber	See **Parking Brake** (page 132).

Information Provided by:
DEALER E-PROCESS

Stability Control

Message	Message indicator	Action
Electronic stability control off	Amber	See **Using Stability Control** (page 135).
ABS malfunction Service Now	Amber	Have the system checked by an authorized dealer as soon as possible.
Traction control off	-	See **Using Stability Control** (page 135).
Sport mode	-	See **Using Stability Control** (page 135).
Electronic stability control off	-	See **Using Stability Control** (page 135).

Starting and Stopping the Engine

Message	Message indicator	Action
Press brake to start	-	See **Starting and Stopping the Engine** (page 111).
Press clutch to start	-	See **Starting and Stopping the Engine** (page 111).
Press brake and clutch to start	-	See **Starting and Stopping the Engine** (page 111).
Cranking time exceeded	-	See **Starting and Stopping the Engine** (page 111).

Steering

Message	Message indicator	Action
Steering assist fault Service required	Amber	Full steering will be maintained but you will need to exert greater force on the steering wheel. Have the system checked by an authorized dealer as soon as possible.

Information Provided by: DEALER E-PROCESS

Tire pressure monitoring system

Message	Message indicator	Action
Check tire pressures	Amber	The pressure in one or more tires has dropped. Check as soon as possible.
Tire Pressure Monitor Fault	Amber	Permanent malfunction. Have your vehicle checked by an authorized dealer.

Transmission

Message	Message indicator	Action
Transmission malfunction Service now	Red	Have the system checked by an authorized dealer immediately.
Transmission overtemperature Stop safely	Red	Under certain driving conditions it is possible that the clutches in the transmission can overheat. In these circumstances it is necessary to press the brake pedal and stop your vehicle to prevent damage to the transmission. Move the transmission selector lever to position **N** or **P** and apply the parking brake until the transmission has cooled and the message disappears from the display.
Use brake Stop safely	Red	Have the system checked by an authorized dealer immediately.
Vehicle not in Park Select P	-	See **Automatic Transmission** (page 126). See **Starting and Stopping the Engine** (page 111).
Select N or P to start	-	See **Automatic Transmission** (page 126). See **Starting and Stopping the Engine** (page 111).
Press brake to start	-	See **Starting and Stopping the Engine** (page 111).

Information Provided by:
DEALER E-PROCESS

Message	Message indicator	Action
Select N to start	-	See **Automatic Transmission** (page 126). See **Starting and Stopping the Engine** (page 111).
Door open Apply brake	-	See **Automatic Transmission** (page 126). See **Starting and Stopping the Engine** (page 111).
Transmission hot Stop or speed up	-	Transmission is getting hot. Stop to let it cool or speed up.
Transmission hot Wait...	-	Transmission is hot. Wait as needed to let it cool.
Transmission ready	-	Your vehicle is ready to drive.
Press brake to unlock gearshift lever	-	See **Automatic Transmission** (page 126). See **Starting and Stopping the Engine** (page 111).
Gearshift lever unlocked	-	See **Automatic Transmission** (page 126). See **Starting and Stopping the Engine** (page 111).
Transmission not in Park	-	See **Automatic Transmission** (page 126). See **Starting and Stopping the Engine** (page 111).

Information Provided by:
DEALER E-PROCESS

MANUAL CLIMATE CONTROL

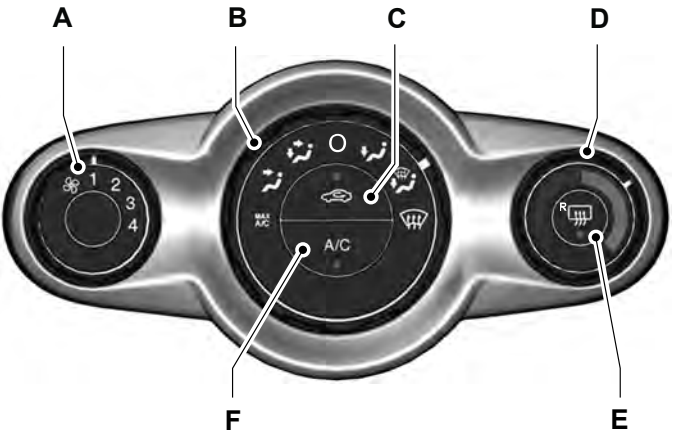

E158234

A **Fan speed control:** Adjust the volume of air circulated in the vehicle.

B **Air distribution control:** Adjust the control to turn airflow from the windshield, instrument panel, or footwell vents on or off. You can distribute air through any combination of these vents.

C **Recirculated air:** Press the button to switch between outside air and recirculated air. The air currently in the passenger compartment recirculates. This can reduce the time needed to cool the interior and reduce unwanted odors from entering your vehicle.

D **Temperature control:** Controls the temperature of the air circulated in your vehicle.

E **Heated rear window:** Press the button to switch the heated rear window on and off.

F **A/C:** Press the button to switch the air conditioning on or off. Air conditioning cools your vehicle using outside air. To improve the time to reach a comfortable temperature in hot weather, drive with the windows open until you feel cold air through the air vents.

Information Provided by:
DEALER E-PROCESS

AUTOMATIC CLIMATE CONTROL (If Equipped)

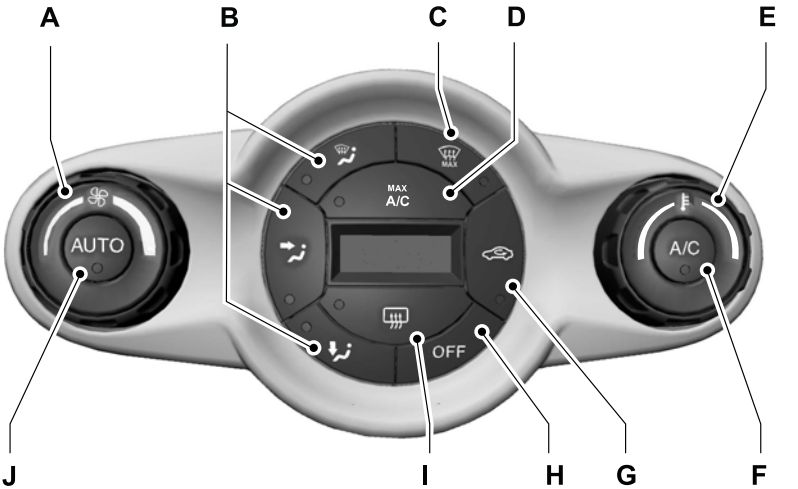

E158263

A **Fan speed:** Adjust the volume of air circulated in the vehicle.

B **Air distribution control:** Adjust the control to turn airflow from the windshield, instrument panel, or footwell vents on or off. You can distribute air through any combination of these vents.

C **MAX Defrost:** Press the button to switch on defrost. Outside air flows through the windshield vents, air conditioning automatically turns on, and fan automatically adjusts to the highest speed. You can also use this setting to defrost and clear the windshield of a thin covering of ice. The heated rear window also automatically turns on when you select maximum defrost.

D **MAX A/C:** Press the button to maximize cooling. Recirculated air flows through the instrument panel vents, air conditioning automatically turns on, and the fan automatically adjusts to the highest speed.

E **Temperature control:** Controls the temperature of the air circulated in your vehicle.

F **A/C:** Press the button to switch the air conditioning on or off. Air conditioning cools your vehicle using outside air. To improve the time to reach a comfortable temperature in hot weather, drive with the windows open until you feel cold air through the air vents.

Information Provided by:
DEALER E-PROCESS

G **Recirculated air:** Press the button to switch between outside air and recirculated air. The air currently in the passenger compartment recirculates. This can reduce the time needed to cool the interior and reduce unwanted odors from entering your vehicle.

Note: Recirculated air may also turn on and off automatically in instrument panel or instrument panel and floor airflow modes during hot weather to improve cooling efficiency.

H **OFF:** Press the button to switch the system on and off. When the system is off, it prevents outside air from entering the vehicle.

I **Heated rear window:** Press the button to switch the heated rear window on and off.

J **AUTO:** Press the button to switch on automatic operation. Select the desired temperature using the temperature control. The system adjusts fan speed, air distribution, air conditioning operation, and selects outside air or recirculated air to heat or cool the vehicle in order to maintain the desired temperature.

Temperature Control

E148690

You can set the temperature between 61ºF (16ºC) and 82ºF (28ºC). In position low, the system switches to permanent cooling. In position high, the system switches to permanent heating.

Note: *If you select either position low or high, the system will not regulate a stable temperature.*

HINTS ON CONTROLLING THE INTERIOR CLIMATE

General Hints

WARNING

Prolonged use of recirculated air may cause the windows to fog up. If the windows fog up, follow the settings for demisting the windshield.

Note: *You may feel a small amount of air from the footwell air vents regardless of the air distribution setting.*

Note: *To reduce humidity build-up inside your vehicle, do not drive with the system switched off or with recirculated air always switched on.*

Note: *Do not place objects under the front seats as this may interfere with the airflow to the rear seats.*

Note: *Remove any snow, ice or leaves from the air intake area at the base of the windshield.*

Information Provided by: DEALER E-PROCESS

Manual Climate Control

Note: *To reduce fogging of the windshield during humid weather, adjust the air distribution control to the windshield air vents position.*

Automatic Climate Control

Note: *Adjusting the settings when your vehicle interior is extremely hot or cold is not necessary. The system automatically adjusts to heat or cool the interior to your selected temperature as quickly as possible. For the system to function efficiently, the instrument panel and side air vents should be fully open.*

Note: *At low ambient temperatures with **AUTO** selected, the air stream is directed toward the windshield and side windows for as long as the engine remains cold.*

Note: *When the system is switched off, outside air is prevented from entering your vehicle.*

Note: *When you select **AUTO** mode and the interior and exterior temperatures are high, the system automatically selects recirculated air to maximize cooling of the interior. When the desired air temperature is reached, the system automatically selects outside air.*

Note: *When you select windshield defrosting and defogging, the instrument panel and footwell level functions automatically switch off and air conditioning switches on. Outside air flows into your vehicle.*

Heating the Interior Quickly

	Vehicles With Manual Climate Control	Vehicles With Automatic Climate Control
1	Adjust the fan speed to the highest setting.	Press the **AUTO** button.
2	Adjust the temperature control to the highest setting.	Adjust the temperature control to the full heat position.
3	Adjust the air distribution control to the footwell air vents position.	

Recommended Settings for Heating

	Vehicles With Manual Climate Control	Vehicles With Automatic Climate Control
1	Adjust the fan speed to the second setting.	Press the **AUTO** button.
2	Adjust the temperature control to the desired setting.	Adjust the temperature control to the desired setting.
3	Adjust the air distribution control to the footwell and windshield air vents position.	

Information Provided by: DEALER E-PROCESS

Cooling the Interior Quickly

	Vehicles With Manual Climate Control	Vehicles With Automatic Climate Control
1	Adjust the fan speed to the highest setting.	Press the **MAX A/C** button.
2	Adjust the temperature control setting to **MAX A/C**.	
3	Adjust the air distribution control to the instrument panel air vents position.	

Recommended Settings for Cooling

	Vehicles With Manual Climate Control	Vehicles With Automatic Climate Control
1	Adjust the fan speed to the second setting.	Press the **AUTO** button.
2	Adjust the temperature control to the desired setting.	Adjust the temperature control to the desired setting.
3	Adjust the air distribution control to the instrument panel air vents position.	
4	Press the **A/C** button.	

Vehicle Stationary for Extended Periods During Extreme High Ambient Temperatures

	Vehicles With Manual Climate Control	Vehicles With Automatic Climate Control
1	Apply the parking brake.	Apply the parking brake.
2	Move the transmission selector lever to position **P** or neutral.	Move the transmission selector lever to position **P** or neutral.
3	Adjust the temperature control to the **MAX A/C** position.	Press the **AUTO** button.
4	Adjust the fan speed to the highest setting.	Adjust the temperature control to the desired setting.

Information Provided by:
DEALER E-PROCESS

Side Window Defogging in Cold Weather

	Vehicles With Manual Climate Control	Vehicles With Automatic Climate Control
1	Adjust the fan speed to the highest setting.	Press the MAX defrost button.
2	Adjust the temperature control to the highest setting.	
3	Adjust the air distribution control to the windshield position.	
4	Press the **A/C** button.	

Maximum Cooling Performance in Instrument Panel or Instrument Panel and Footwell Positions

1. Adjust the temperature control to the lowest setting.
2. Press the **A/C** and recirculated air buttons.
3. Adjust the fan speed to the highest setting initially and then adjust it to suit the desired comfort level.

HEATED WINDOWS AND MIRRORS

Heated Windows

Note: *Make sure the engine is running before operating the heated windows.*

Heated Rear Window

Press the button to clear the heated rear window of thin ice and fog. The heated rear window will automatically turn off after a short period of time. Start the engine before you switch the heated rear window on.

Note: *Do not use razor blades or other sharp objects to clean or remove decals from the inside of the heated rear window. The vehicle warranty does not cover damage caused to the heated rear window grid lines.*

Heated Exterior Mirrors

When you switch the heated rear window on, the heated exterior mirrors will automatically turn on.

Note: *Do not remove ice from the mirrors with a scraper or adjust the mirror glass when it is frozen in place.*

Note: *Do not clean the mirror housing or glass with harsh abrasives, fuel or other petroleum-based cleaning products.*

CABIN AIR FILTER

Your vehicle is equipped with a cabin air filter. It is located behind the center console.

The particulate filtration system reduces the concentration of airborne particles such as dust, spores and pollen in the air supplied to the interior of your vehicle.

Information Provided by: DEALER E-PROCESS

Note: *Make sure you have a cabin air filter installed at all times. This prevents foreign objects from entering the system. Running the system without a filter in place could result in degradation or damage to the system.*

The particulate filtration system gives you and your passengers the following benefits:

- It improves your driving comfort by reducing particle concentration.
- It improves the interior compartment cleanliness.
- It protects the climate control components from particle deposits.

Replace the filter at regular intervals. See **Scheduled Maintenance** (page 316).

For additional cabin air filter information, or to replace the filter, see an authorized dealer.

Information Provided by:
DEALER E-PROCESS

SITTING IN THE CORRECT POSITION

WARNINGS

Do not recline the seat backrest too far as this can cause the occupant to slide under the safety belt, resulting in serious injury in the event of a crash.

Sitting improperly, out of position or with the seat backrest reclined too far, can result in serious injury or death in the event of a crash. Always sit upright against your seat backrest, with your feet on the floor.

Do not place objects higher than the seat backrest to reduce the risk of serious injury in the event of a crash or during heavy braking.

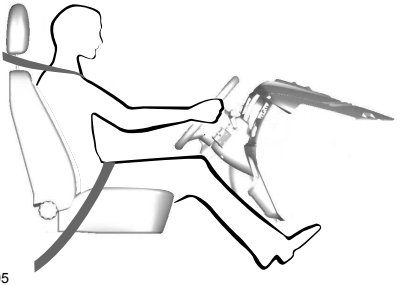

E68595

When you use them properly, the seat, head restraint, safety belt and airbags will provide optimum protection in the event of a crash.

We recommend that you follow these guidelines:

- Sit in an upright position with the base of your spine as far back as possible.
- Do not recline the seat backrest more than 30 degrees.
- Adjust the head restraint so that the top of it is level with the top of your head and as far forward as possible. Make sure that you remain comfortable.
- Keep sufficient distance between yourself and the steering wheel. We recommend a minimum of 10 inches (25 centimeters) between your breastbone and the airbag cover.
- Hold the steering wheel with your arms slightly bent.
- Bend your legs slightly so that you can press the pedals fully.
- Position the shoulder strap of the safety belt over the center of your shoulder and position the lap strap tightly across your hips.

Make sure that your driving position is comfortable and that you can maintain full control of your vehicle.

HEAD RESTRAINTS

WARNINGS

Fully adjust the head restraint before you sit in or operate your vehicle. This will help minimize the risk of neck injury in the event of a crash. Do not adjust the head restraint when your vehicle is moving.

The adjustable head restraint is a safety device. Whenever possible it should be installed and correctly adjusted when the seat is occupied. An incorrectly adjusted head restraint may provide reduced protection to an occupant during certain rear impacts.

Information Provided by: DEALER E-PROCESS

WARNINGS

Install the head restraint properly to help minimize the risk of neck injury in the event of a crash.

Note: *Adjust the seat backrest to an upright driving position before adjusting the head restraint. Adjust the head restraint so that the top of it is level with the top of your head and as far forward as possible. Make sure that you remain comfortable. If you are extremely tall, adjust the head restraint to its highest position.*

Front seat head restraint

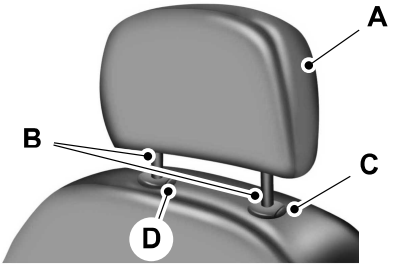

E138642

Rear seat outboard head restraints

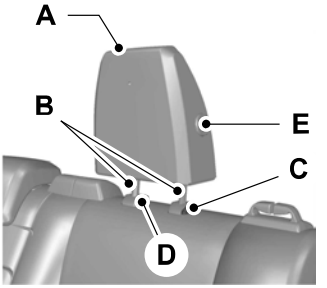

E138643

Rear seat center head restraint

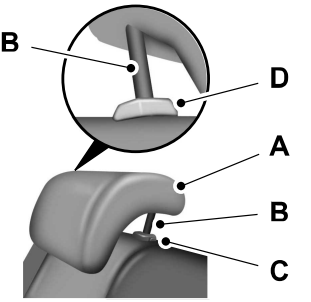

E138645

The head restraints consist of:

A	Energy absorbing head restraint.
B	Steel stems.
C	Guide sleeve adjust and unlock button.
D	Guide sleeve unlock and remove button.
E	Tilt button.

Adjusting the Head Restraint

Raising the Head Restraint

Pull the head restraint up.

Lowering the Head Restraint

1. Press and hold button C.
2. Push the head restraint down.

Removing the Head Restraint

1. Pull the head restraint up until it reaches its highest position.
2. Press and hold buttons C and D.
3. Pull the head restraint up.

Installing the Head Restraint

Align the steel stems into the guide sleeves and push the head restraint down until it locks.

Information Provided by:
DEALER E-PROCESS

Folding the Head Restraint

1. Press and hold button E.
2. Pull it back up to reset.

MANUAL SEATS

WARNING

Do not adjust the driver seat when your vehicle is moving.

Moving the Seat Backward and Forward

WARNING

Rock the seat backward and forward after releasing the lever to make sure that it is fully engaged in its catch. A seat which is not fully engaged in its catch could move when your vehicle is moving. This may result in the loss of control of your vehicle, serious personal injury or death.

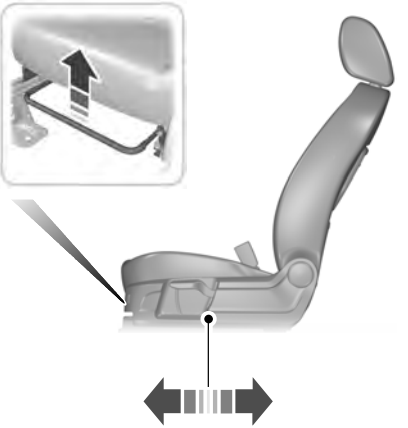

E147926

Adjusting the Lumbar Support (If Equipped)

E142199

Adjusting the Height of the Driver Seat

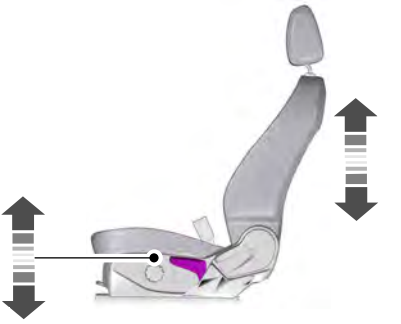

E70730

Information Provided by: DEALER E-PROCESS

Recline Adjustment

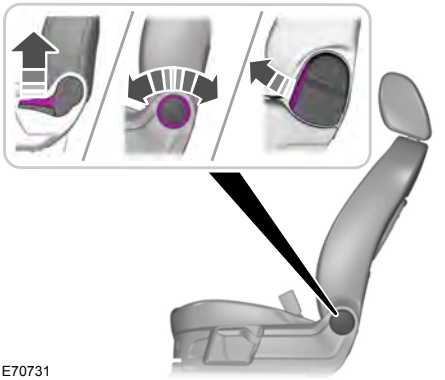

E70731

REAR SEATS

Folding the Seatback

WARNING

When folding the seatback down, take care not to get your hands caught between the seatback and the frame, catches or mechanism. Failure to take care may result in personal injury.

Note: *Fully lower the head restraints. Your vehicle may have folding rear head restraints. Fold these before you fold the seatback. See* ***Head Restraints*** *(page 103).*

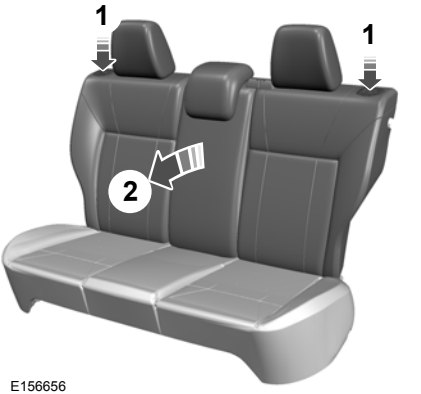

E156656

1. Press the unlock buttons down and hold them there.
2. Push the seatback forward.

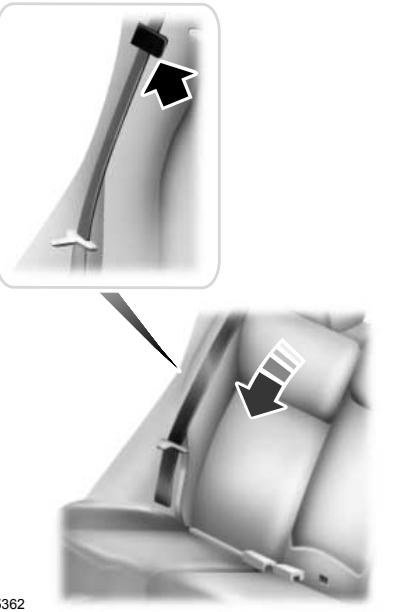

E165362

Information Provided by:
DEALER E-PROCESS

3. Stow the safety belt in the belt stowage clip. This prevents the safety belt from getting caught in the seat latch.

Note: *Do not attempt to fold the rear seat cushion forward.*

Unfolding the Seatback

WARNINGS

When unfolding the seatback up, take care not to get your hands caught between the seatback and the frame, catches or mechanism. Failure to take care may result in personal injury.

Make sure that any cargo or objects are not trapped behind the seatback. Make sure the safety belts are not trapped in any way when unfolding the seatback up. Failure of an occupant to be able to use a trapped safety belt increases the risk of serious personal injury or death.

Make sure that the seatback is fully engaged in its catch. A seatback which is not fully engaged in its catch could move in the event of an accident. This may result in serious personal injury or death.

HEATED SEATS

WARNINGS

People who are unable to feel pain to their skin because of advanced age, chronic illness, diabetes, spinal cord injury, medication, alcohol or drug use, exhaustion or other physical conditions, must exercise extreme care when using the heated seat. The heated seat may cause burns even at low temperatures, especially if used for long periods of time. An overheated seat may cause serious personal injury.

WARNINGS

Do not place anything on the seat that insulates against heat, for example; blankets or cushions. This may cause the heated seat to overheat. An overheated seat may cause serious personal injury.

Do not puncture the seat with any sharp objects. This may damage the heating element which may cause the heated seat to overheat. An overheated seat may cause serious personal injury.

Do not place heavy objects on the seat. This may damage the heating element which may cause the heated seat to overheat. An overheated seat may cause serious personal injury.

Do not use the seat heater if any liquid is spilled on the seat. This may damage the heating element which may cause the heated seat to overheat. Allow the seat to dry thoroughly before reusing the seat heater. An overheated seat may cause serious personal injury.

Note: *The heated seats include both a heated seat cushion and heated seatback.*

E156657

Information Provided by:
DEALER E-PROCESS

Press the required switch to turn the seat heating on. The lamp inside the switch will illuminate. Press the switch again to turn the seat heating off.

The seat heaters will only turn on with the ignition turned on.

Note: *You should avoid using the seat heaters unless the engine is running. Using the seat heaters without the engine running could drain your vehicle battery.*

The heated seat will remain turned on until either the heated seat switch or the ignition is turned off.

Information Provided by:
DEALER E-PROCESS

12 Volt DC Power Point

WARNINGS

Do not plug optional electrical accessories into the cigar lighter socket. Incorrect use of the cigar lighter can cause damage not covered by the vehicle warranty, and can result in fire or serious injury.

Incorrect use of the power points can cause damage not covered by the vehicle warranty, and can result in fire or serious injury.

Note: *When you switch the ignition on, you can use the socket to power 12 volt appliances with a maximum current rating of 15 amps.*

If the power supply does not work after you switch the ignition off, switch the ignition on.

Note: *Do not insert objects other than an accessory plug into the power point. This will damage the outlet and blow the fuse.*

Note: *Do not hang any accessory from the accessory plug.*

Note: *Do not use the power point over the vehicle capacity of 12 volt DC 180 watts or a fuse may blow.*

Note: *Do not use a power point for operating a cigar lighter.*

Note: *Always keep the power point caps closed when not in use.*

Run the vehicle for full capacity use of the power point.

To prevent the battery from running out of charge:

- Do not use the power point longer than necessary when the vehicle is not running.
- Do not leave devices plugged in overnight or when you park your vehicle for extended periods.

Location

Power points may be in the following locations:

- On the center console.
- On the rear of the center console.

CIGAR LIGHTER (If Equipped)

Note: *Do not hold the cigar lighter element pressed in.*

Note: *If the power supply does not work after you switch the ignition off, switch the ignition on.*

Note: *If you use the socket when the engine is not running, the battery may lose charge.*

Note: *When you switch the ignition on, you can use the socket to power 12 volt appliances with a maximum current rating of 15 amps.*

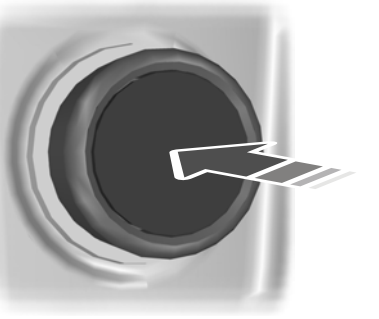

E103382

Press the element in to use the cigar lighter. It will pop out automatically.

Information Provided by: DEALER E-PROCESS

CENTER CONSOLE

Stow items in the cup holder carefully as items may become loose during hard braking, acceleration or crashes, including hot drinks which may spill.

Available console features include:

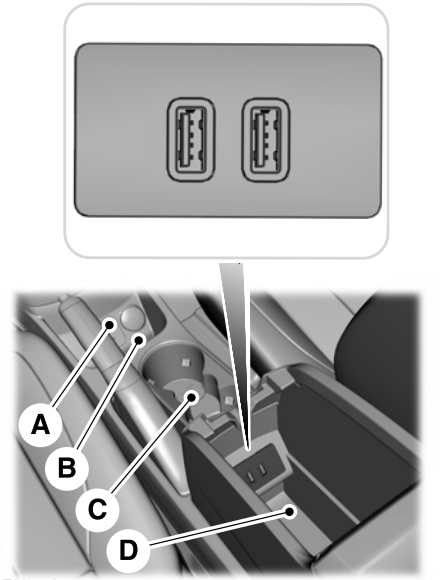

E205442

A Card holder or auxiliary power point.

B 110 volt auxiliary power point.

C Cup holders.

D Storage compartment with two USB ports.

OVERHEAD CONSOLE (If Equipped)

E131605

Press near the rear edge of the door to open it.

Information Provided by:
DEALER E-PROCESS

GENERAL INFORMATION

WARNINGS

Extended idling at high engine speeds can produce very high temperatures in the engine and exhaust system, creating the risk of fire or other damage.

Do not park, idle or drive your vehicle on dry grass or other dry ground cover. The emission system heats up the engine compartment and exhaust system, creating the risk of fire.

Do not start the engine in a closed garage or in other enclosed areas. Exhaust fumes can be toxic. Always open the garage door before you start the engine.

If you smell exhaust fumes inside your vehicle, have your vehicle checked by an authorized dealer immediately. Do not drive your vehicle if you smell exhaust fumes.

If you disconnect the battery, your vehicle may exhibit some unusual driving characteristics for approximately 5 miles (8 kilometers) after you reconnect it. This is because the engine management system must realign itself with the engine. You can disregard any unusual driving characteristics during this period.

The powertrain control system meets all Canadian interference-causing equipment standard requirements regulating the impulse electrical field or radio noise.

When you start the engine, avoid pressing the accelerator pedal before and during operation. Only use the accelerator pedal when you have difficulty starting the engine.

IGNITION SWITCH

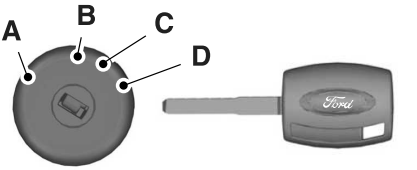

E180794

A (off) - The ignition is off.

Note: *When you switch the ignition off and leave your vehicle, do not leave your key in the ignition. This could cause your vehicle battery to lose charge.*

Note: *To switch the engine off when your vehicle is moving, move the transmission selector lever to position **N**. Use the brakes to bring the vehicle to a safe stop. After your vehicle has stopped, switch the engine off and move the transmission selector lever to position **P**. Turn the key to position **A** or **B**.*

B (accessory) - Allows the electrical accessories such as the radio to operate while the engine is not running.

Note: *Do not leave the ignition key in this position for too long. This could cause your vehicle battery to lose charge.*

C (on) - All electrical circuits operational. Warning lamps and indicators illuminate.

D (start) - cranks the engine. Release the key as soon as the engine starts.

KEYLESS STARTING (If Equipped)

WARNING

The system may not function if the key is close to metal objects or electronic devices such as cell phones.

Information Provided by: DEALER E-PROCESS

Note: *The ignition will automatically switch off when you leave your vehicle unattended. This is to prevent your vehicle battery running out of charge.*

Note: *A valid key must be located inside your vehicle to switch the ignition on and start the engine.*

Ignition On

Press the START button once. It is located on the instrument panel near the steering wheel. All electrical circuits and accessories are operational and the warning lamps and indicators will illuminate.

E142555

Starting with Manual Transmission

Note: *Releasing the clutch pedal while the engine is starting will stop the engine cranking and return to ignition on.*

1. Fully depress the clutch pedal.
2. Briefly press the button.

Starting with Automatic Transmission

Note: *Releasing the brake pedal while the engine is starting will stop the engine cranking and return to ignition on.*

1. Move the transmission selector lever to position P or N.
2. Fully depress the brake pedal.
3. Briefly press the button.

Failure to Start

All Vehicles

The system will not function if:

- The key frequencies are jammed.
- The key battery has no charge.

If you are unable to start your vehicle, do the following.

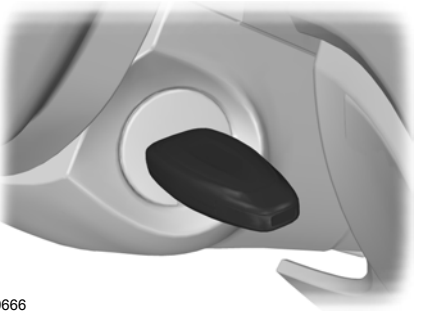

E99666

1. Hold the key next to the steering column exactly as shown.
2. With the key in this position you can use the button to switch the ignition on and start your engine.

Manual Transmission

Note: *Releasing the clutch pedal while the engine is starting will stop the engine cranking and return to ignition on. A message will be shown in the display.*

Information Provided by:
DEALER E-PROCESS

If the engine does not crank when the clutch pedal has been fully depressed and the button is pressed:

1. Fully depress both the clutch and brake pedals.
2. Press the button until the engine starts.

Stopping the Engine with Your Vehicle Stationary

Note: *The ignition, all electrical circuits warning lamps and indicators will be switched off.*

Manual Transmission

Briefly press the button.

Automatic Transmission

1. Move the transmission selector lever to position P.
2. Press the button.

Stopping the Engine When Your Vehicle is Moving

WARNING

Switching off the engine when the vehicle is still moving will result in a loss of brake and steering assistance. The steering will not lock, but higher effort will be required. With the ignition switched off some electrical circuits, warning lamps and indicators may also be off.

1. Press and hold the button for at least one second or press it three times within two seconds.
2. Move the transmission selector lever to position N and use the brakes to bring your vehicle to a safe stop.
3. When your vehicle has stopped, move the transmission selector lever to position P or N and switch the ignition off.

STARTING A GASOLINE ENGINE

Note: *You can only operate the starter for a limited period, for example 10 seconds. The number of start attempts is limited to approximately six. If you exceed this limit, the system does not allow you to try again until some time has elapsed, for example 30 minutes.*

When you start the engine, the idle speed increases, this helps to warm up the engine. If the engine idle speed does not slow down automatically, have your vehicle checked by an authorized dealer.

Before starting the engine, check the following:

- Make sure all occupants have fastened their safety belts.
- Make sure the headlamps and electrical accessories are off.
- Make sure to set the parking brake.
- Move the transmission selector lever to position **P** (automatic transmission) or neutral (manual transmission).
- Turn the ignition key to position **C**. If your vehicle is equipped with a keyless ignition, see the following instructions.

Cold or Hot Engine

Vehicles with Manual Transmission

Note: *Do not touch the accelerator pedal.*

Note: *Releasing the clutch pedal while the engine is starting stops the engine cranking and returns the ignition to on.*

1. Fully depress the clutch pedal.
2. Start the engine.

Vehicles with Automatic Transmission

Note: *Do not touch the accelerator pedal.*

Information Provided by: DEALER E-PROCESS

1. Move the transmission selector lever to position **P** or **N**.
2. Start the engine.

All Vehicles

If the engine does not start within 10 seconds, wait for a short period and try again.

If the engine does not start after three attempts, wait 10 seconds and follow the flooded engine procedure.

If you have difficulty starting the engine when the temperature is below -13ºF (-25ºC), press the accelerator pedal to the mid-way point of its travel and try again.

Flooded Engine

Vehicles with Manual Transmission

1. Fully depress the clutch pedal.
2. Fully depress the accelerator pedal and hold it there.
3. Start the engine.

Vehicles with Automatic Transmission

1. Move the transmission selector lever to position **P** or **N**.
2. Fully depress the accelerator pedal and hold it there.
3. Start the engine.

All Vehicles

If the engine does not start, repeat the cold or hot engine procedure.

Engine Idle Speed after Starting

The speed at which the engine idles immediately after starting minimizes vehicle emissions and maximizes cabin comfort and fuel economy.

The idle speed varies depending on certain factors. These include vehicle component and ambient temperatures as well as electrical and climate system demands.

Failure to Start

Vehicles with Manual Transmission

If the engine does not crank when you fully depress the clutch pedal and turn the ignition key to position **D**:

1. Fully depress the clutch and brake pedals.
2. Turn the key to position **D** until the engine has started.

SWITCHING OFF THE ENGINE

Vehicles With a Turbocharger

WARNING

Do not switch the engine off when it is running at high speed. If you do, the turbocharger will continue running after the engine oil pressure has dropped to zero. This will lead to premature turbocharger bearing wear.

Release the accelerator pedal. Wait until the engine has reached idle speed and then switch it off.

ENGINE BLOCK HEATER (If Equipped)

WARNINGS

Failure to follow engine block heater instructions could result in property damage or serious personal injury.

Do not use your heater with ungrounded electrical systems or two-pronged adapters. There is a risk of electrical shock.

Information Provided by: DEALER E-PROCESS

WARNINGS

Do not fully close the hood, or allow it to drop under its own weight when using the engine block heater. This could damage the power cable and may cause an electrical short resulting in fire, injury and property damage.

Note: *The heater is most effective when outdoor temperatures are below 0ºF (-18ºC).*

The heater acts as a starting aid by warming the engine coolant. This allows the climate control system to respond quickly. The equipment includes a heater element (installed in the engine block) and a wire harness. You can connect the system to a grounded 120-volt AC electrical source.

We recommend that you do the following for a safe and correct operation:

- Use a 16-gauge outdoor extension cord that is product certified by Underwriter's Laboratory (UL) or Canadian Standards Association (CSA). This extension cord must be suitable for use outdoors, in cold temperatures, and be clearly marked Suitable for Use with Outdoor Appliances. Do not use an indoor extension cord outdoors. This could result in an electric shock or become a fire hazard.
- Use as short an extension cord as possible.
- Do not use multiple extension cords.
- Make sure that when in operation, the extension cord plug and heater cord plug connections are free and clear of water. This could cause an electric shock or fire.
- Make sure your vehicle is parked in a clean area, clear of combustibles.
- Make sure the heater, heater cord and extension cord are firmly connected.
- Check for heat anywhere in the electrical hookup once the system has been operating for approximately 30 minutes.
- Make sure the system is unplugged and properly stowed before starting and driving your vehicle. Make sure the protective cover seals the prongs of the block heater cord plug when not in use.
- Make sure the heater system is checked for proper operation before winter.

Using the Engine Block Heater

Make sure the receptacle terminals are clean and dry prior to use. Clean them with a dry cloth if necessary.

The heater uses 0.4 to 1.0 kilowatt-hours of energy per hour of use. The system does not have a thermostat. It achieves maximum temperature after approximately three hours of operation. Using the heater longer than three hours does not improve system performance and unnecessarily uses electricity.

Information Provided by: DEALER E-PROCESS

SAFETY PRECAUTIONS

WARNINGS

Do not overfill the fuel tank. The pressure in an overfilled tank may cause leakage and lead to fuel spray and fire.

The fuel system may be under pressure. If you hear a hissing sound near the fuel filler door (Easy Fuel capless fuel system), do not refuel until the sound stops. Otherwise, fuel may spray out, which could cause serious personal injury.

Automotive fuels can cause serious injury or death if misused or mishandled.

Flow of fuel through a fuel pump nozzle can produce static electricity. This can cause a fire if you are filling an ungrounded fuel container.

Fuel ethanol and gasoline may contain benzene, which is a cancer-causing agent.

When refueling always shut the engine off and never allow sparks or open flames near the filler neck. Never smoke or use a cell phone while refueling. Fuel vapor is extremely hazardous under certain conditions. Avoid inhaling excess fumes.

Observe the following guidelines when handling automotive fuel:

- Extinguish all smoking materials and any open flames before refueling your vehicle.
- Always turn off the vehicle before refueling.
- Automotive fuels can be harmful or fatal if swallowed. Fuel such as gasoline is highly toxic and if swallowed can cause death or permanent injury. If fuel is swallowed, call a physician immediately, even if no symptoms are immediately apparent. The toxic effects of fuel may not be visible for hours.
- Avoid inhaling fuel vapors. Inhaling too much fuel vapor of any kind can lead to eye and respiratory tract irritation. In severe cases, excessive or prolonged breathing of fuel vapor can cause serious illness and permanent injury.
- Avoid getting fuel liquid in your eyes. If fuel is splashed in the eyes, remove contact lenses (if worn), flush with water for 15 minutes and seek medical attention. Failure to seek proper medical attention could lead to permanent injury.
- Fuels can also be harmful if absorbed through the skin. If fuel is splashed on the skin, clothing or both, promptly remove contaminated clothing and wash skin thoroughly with soap and water. Repeated or prolonged skin contact with fuel liquid or vapor causes skin irritation.
- Be particularly careful if you are taking “Antabuse” or other forms of disulfiram for the treatment of alcoholism. Breathing gasoline vapors, or skin contact could cause an adverse reaction. In sensitive individuals, serious personal injury or sickness may result. If fuel is splashed on the skin, promptly wash skin thoroughly with soap and water. Consult a physician immediately if you experience an adverse reaction.

Information Provided by: DEALER E-PROCESS

FUEL QUALITY - GASOLINE

Choosing the Right Fuel

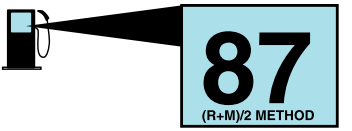

E161513

We recommend regular unleaded gasoline with a pump (R+M)/2 octane rating of 87. Some fuel stations offer fuels posted as regular unleaded gasoline with an octane rating below 87, particularly in high altitude areas. We do not recommend fuels with an octane rating below 87.

For vehicles with EcoBoost engines, to provide improved performance, we recommend premium fuel for severe duty usage such as trailer tow.

Do not use any fuel other than those recommended because they could lead to engine damage that may not be covered by the vehicle Warranty.

Note: *Use of any fuel other than those recommended can impair the emission control system and cause a loss of vehicle performance.*

Do not use:

- Diesel fuel.
- Fuels containing kerosene or paraffin.
- Fuel containing more than 15% ethanol or E85 fuel.
- Fuels containing methanol.
- Fuels containing metallic-based additives, including manganese-based compounds.
- Fuels containing the octane booster additive, methylcyclopentadienyl manganese tricarbonyl (MMT).
- Leaded fuel (using leaded fuel is prohibited by law).

The use of fuels with metallic compounds such as methylcyclopentadienyl manganese tricarbonyl (commonly known as MMT), which is a manganese-based fuel additive, will impair engine performance and affect the emission control system.

Do not be concerned if the engine sometimes knocks lightly. However, if the engine knocks heavily while using fuel with the recommended octane rating, contact an authorized dealer to prevent any engine damage.

RUNNING OUT OF FUEL

Avoid running out of fuel because this situation may have an adverse effect on powertrain components.

If you have run out of fuel:

- You may need to cycle the ignition from off to on several times after refueling to allow the fuel system to pump the fuel from the tank to the engine. On restarting, cranking time will take a few seconds longer than normal. With keyless ignition, just start the engine. Crank time will be longer than usual.
- Normally, adding 1 gallon (4.6 liters) of fuel is enough to restart the engine. If your vehicle is out of fuel and on a steep grade, more than 1 gallon (4.6 liters) may be required.

Information Provided by:
DEALER E-PROCESS

Refilling With a Portable Fuel Container

WARNINGS

Do not insert the nozzle of portable fuel containers or aftermarket funnels into the capless fuel system. This could damage the fuel system and its seal, and may cause fuel to run onto the ground instead of filling the tank, which could result in serious personal injury.

Do not try to pry open or push open the capless fuel system with foreign objects. This could damage the fuel system and its seal and cause injury to you or others.

Note: *Do not use aftermarket funnels; they will not work with the capless fuel system and can damage it. The included funnel has been specially designed to work safely with your vehicle.*

When filling your vehicle's fuel tank from a portable fuel container, use the funnel included with your vehicle.

E142668

1. Locate the plastic funnel in the rear of the vehicle, inside the load compartment.
2. Slowly insert the funnel into the capless fuel system.
3. Fill your vehicle with fuel from the portable fuel container.
4. When done, clean the funnel or properly dispose of it. Extra funnels can be purchased from your authorized dealer if you choose to dispose of the funnel.

REFUELING

WARNINGS

Fuel vapor burns violently and a fuel fire can cause severe injuries.

Read and follow all the instructions on the pump island.

Turn off your engine when you are refueling.

Do not smoke if you are near fuel or refueling your vehicle.

Keep sparks, flames and smoking materials away from fuel.

Stay outside your vehicle and do not leave the fuel pump unattended when refueling your vehicle. This is against the law in some places.

Keep children away from the fuel pump; never let children pump fuel.

Do not use personal electronic devices while refueling.

Use the following guidelines to avoid electrostatic charge build-up when filling an ungrounded fuel container:

- Place approved fuel container on the ground.
- Do not fill a fuel container while it is in the vehicle (including the cargo area).
- Keep the fuel pump nozzle in contact with the fuel container while filling.
- Do not use a device that would hold the fuel pump handle in the fill position.

Information Provided by: DEALER E-PROCESS

Easy Fuel™ Capless Fuel System

WARNING

The fuel system may be under pressure. If you hear a hissing sound near the fuel filler door, do not refuel until the sound stops. Otherwise, fuel may spray out, which could cause serious personal injury.

When fueling your vehicle:

1. Put the vehicle in park (P) or neutral on vehicles with manual transmission, apply the parking brake and switch the ignition off.
2. Open the fuel filler door.
3. Slowly insert the fuel filler nozzle fully into the fuel system, and leave the nozzle fully inserted until you are done pumping. Hold handle higher during insertion for easier access.
4. After you are done pumping fuel, slowly remove the fuel filler nozzle—allow about five to ten seconds after pumping fuel before removing the fuel filler nozzle. This allows residual fuel to drain back into the fuel tank and not spill onto the vehicle.

Note: *A fuel spillage concern may occur if overfilling the fuel tank. Do not overfill the tank to the point that the fuel is able to bypass the fuel filler nozzle. The overfilled fuel may run down the drain located below and in front of the fuel filler door.*

If the fuel fill inlet was not properly closed, a service engine warning lamp may appear on the instrument cluster.

At the next opportunity, do the following:

1. Put the vehicle in park (P) or neutral on vehicles with manual transmission, apply the parking brake and switch the ignition off.
2. Open the fuel filler door and remove any visible debris from the fuel fill opening.
3. Insert either the fuel fill nozzle or the fuel fill funnel provided with the vehicle several times to allow the inlet to close properly. This will dislodge any debris preventing the inlet from sealing.

If this action corrects the problem, the warning lamp may not reset immediately. It may take several driving cycles for the warning lamp to turn off. A driving cycle consists of an engine start-up (after four or more hours with the engine off) followed by city or highway driving.

FUEL CONSUMPTION

Note: *The amount of usable fuel in the empty reserve varies and should not be relied upon to increase driving range. When refueling your vehicle after the fuel gauge indicates empty, you might not be able to refuel the full amount of the advertised capacity of the fuel tank due to the empty reserve still present in the tank.*

Empty reserve is the amount of fuel remaining in the tank after the fuel gauge indicates empty. Do not rely on this fuel for driving. The usable capacity of the fuel tank is the amount of fuel that can be put into the tank after the gauge indicates empty. The advertised capacity is the total fuel tank size – it is the combined usable capacity plus the empty reserve.

Filling the Tank

For consistent results when filling the fuel tank:

Information Provided by: DEALER E-PROCESS

- Turn the ignition off before fueling; an inaccurate reading results if the engine is left running.
- Use the same fill rate (low-medium-high) each time the tank is filled.
- Allow no more than two automatic click-offs when filling.

Results are most accurate when the filling method is consistent.

Calculating Fuel Economy

Do not measure fuel economy during the first 1000 miles (1600 kilometers) of driving (this is your engine's break-in period); a more accurate measurement is obtained after 2000 miles - 3000 miles (3200 kilometers - 4800 kilometers). Also, fuel expense, frequency of fill ups or fuel gauge readings are not accurate ways to measure fuel economy.

1. Fill the fuel tank completely and record the initial odometer reading.
2. Each time you fill the tank, record the amount of fuel added.
3. After at least three to five tank fill ups, fill the fuel tank and record the current odometer reading.
4. Subtract your initial odometer reading from the current odometer reading.
5. Calculate fuel economy by dividing miles traveled by gallons used (For Metric: Multiply liters used by 100, then divide by kilometers traveled).

Keep a record for at least one month and record the type of driving (city or highway). This provides an accurate estimate of the vehicle's fuel economy under current driving conditions. Additionally, keeping records during summer and winter show how temperature impacts fuel economy. In general, lower temperatures mean lower fuel economy.

EMISSION CONTROL SYSTEM

WARNINGS

Do not park, idle, or drive your vehicle in dry grass or other dry ground cover. The emission system heats up the engine compartment and exhaust system, which can start a fire.

Exhaust leaks may result in entry of harmful and potentially lethal fumes into the passenger compartment. If you smell exhaust fumes inside your vehicle, have your dealer inspect your vehicle immediately. Do not drive if you smell exhaust fumes.

Your vehicle is equipped with various emission control components and a catalytic converter that will enable your vehicle to comply with applicable exhaust emission standards. To make sure that the catalytic converter and other emission control components continue to work properly:

- Use only the specified fuel listed.
- Avoid running out of fuel.
- Do not turn off the ignition while your vehicle is moving, especially at high speeds.
- Have the items listed in scheduled maintenance information performed according to the specified schedule.

The scheduled maintenance items listed in scheduled maintenance information are essential to the life and performance of your vehicle and to its emissions system.

If you use parts other than Ford, Motorcraft or Ford-authorized parts for maintenance replacements, or for service of components affecting emission control, such non-Ford parts should be the equivalent to genuine Ford Motor Company parts in performance and durability.

Information Provided by: DEALER E-PROCESS

Illumination of the service engine soon indicator, charging system warning light or the temperature warning light, fluid leaks, strange odors, smoke or loss of engine power could indicate that the emission control system is not working properly.

An improperly operating or damaged exhaust system may allow exhaust to enter the vehicle. Have a damaged or improperly operating exhaust system inspected and repaired immediately.

Do not make any unauthorized changes to your vehicle or engine. By law, vehicle owners and anyone who manufactures, repairs, services, sells, leases, trades vehicles, or supervises a fleet of vehicles are not permitted to intentionally remove an emission control device or prevent it from working. Information about your vehicle's emission system is on the Vehicle Emission Control Information Decal located on or near the engine. This decal also lists engine displacement

Please consult your warranty information for complete details.

On-Board Diagnostics (OBD-II)

Your vehicle has a computer known as the on-board diagnostics system (OBD-II) that monitors the engine's emission control system. The system protects the environment by making sure that your vehicle continues to meet government emission standards. The OBD-II system also assists a service technician in properly servicing your vehicle.

When the service engine soon indicator illuminates, the OBD-II system has detected a malfunction. Temporary malfunctions may cause the service engine soon indicator to illuminate.

Examples of temporary malfunctions are:

- the vehicle has run out of fuel—the engine may misfire or run poorly
- poor fuel quality or water in the fuel—the engine may misfire or run poorly
- the fuel fill inlet may not have closed properly. See **Refueling** (page 118).
- driving through deep water—the electrical system may be wet.

You can correct these temporary malfunctions by filling the fuel tank with good quality fuel, properly closing the fuel fill inlet or letting the electrical system dry out. After three driving cycles without these or any other temporary malfunctions present, the service engine soon indicator should stay off the next time you start the engine. A driving cycle consists of a cold engine startup followed by mixed city/highway driving. No additional vehicle service is required.

If the service engine soon indicator remains on, have your vehicle serviced at the first available opportunity. Although some malfunctions detected by the OBD-II may not have symptoms that are apparent, continued driving with the service engine soon indicator on can result in increased emissions, lower fuel economy, reduced engine and transmission smoothness, and lead to more costly repairs.

Readiness for Inspection/Maintenance (I/M) Testing

Some state/provincial and local governments may have Inspection/Maintenance (I/M) programs to inspect the emission control equipment on your vehicle. Failure to pass this inspection could prevent you from getting a vehicle registration.

Information Provided by: DEALER E-PROCESS

If the service engine soon indicator is on or the bulb does not work, you may need to have the vehicle serviced. See On-Board Diagnostics (OBD-II).

Your vehicle may not pass the I/M test if the service engine soon indicator is on or not working properly (bulb is burned out), or if the OBD-II system has determined that some of the emission control systems have not been properly checked. In this case, your vehicle is not ready for I/M testing.

If the vehicle's engine or transmission has just been serviced, or the battery has recently run down or been replaced, the OBD-II system may indicate that the vehicle is not ready for I/M testing. To determine if the vehicle is ready for I/M testing, turn the ignition key to the on position for 15 seconds without cranking the engine. If the service engine soon indicator blinks eight times, it means that the vehicle is not ready for I/M testing; if the service engine soon indicator stays on solid, it means that the vehicle is ready for I/M testing.

The OBD-II system monitors the emission control system during normal driving. A complete check may take several days. If the vehicle is not ready for I/M testing, you may need to perform the following driving cycle consisting of mixed city and highway driving:

Drive on an expressway or highway for a steady 15 minutes, followed by 20 minutes of stop-and-go driving with at least four 30-second idle periods.

Allow the vehicle to sit for at least eight hours without starting the engine. Then, start the engine and complete the above driving cycle. The engine must warm up to its normal operating temperature. Once started, do not turn off the engine until the above driving cycle is complete. If the vehicle is still not ready for I/M testing, you will have to repeat the above driving cycle.

Information Provided by:
DEALER E-PROCESS

MANUAL TRANSMISSION - 1.0L ECOBOOST™/1.6L DURATEC-16V TI-VCT (SIGMA)

Using the Clutch

Note: *Failure to fully depress the clutch pedal to the floor may cause increased shift efforts, prematurely wear transmission components or damage the transmission.*

Note: *Do not drive with your foot resting on the clutch pedal or use the clutch pedal to hold your vehicle at a standstill while waiting on a hill. These actions will reduce the life of the clutch and could nullify a clutch warranty claim.*

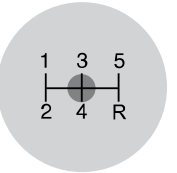

E157512

Manual transmission vehicles have a starter interlock that prevents cranking the engine unless the clutch pedal is fully depressed.

Starting Your Vehicle

WARNING

Make sure the floor mat is positioned correctly so that it does not interfere with the full extension of the clutch pedal.

1. Make sure the parking brake is fully set and shift the gearshift lever to the neutral position.
2. Fully depress the clutch pedal then start the engine.
3. Press the brake pedal and shift the gearshift lever to first or reverse gear.
4. Release the parking brake and slowly release the clutch pedal while slowly pressing on the accelerator.

During each shift, make sure you fully depress the clutch pedal.

Recommended Shift Speeds

Note: *Do not shift the gearshift lever to first gear when your vehicle is moving faster than 15 mph (24 km/h). This will damage the clutch.*

We recommend you change gear according to the following guide to achieve the best fuel economy for your vehicle.

1.0L EcoBoost

Shift from	Recommended speed
1 - 2	15 mph (24 km/h)
2 - 3	25 mph (40 km/h)
3 - 4	40 mph (64 km/h)
4 - 5	45 mph (72 km/h)

1.6L TiVCT

Shift from	Recommended speed
1 - 2	15 mph (24 km/h)
2 - 3	24 mph (38 km/h)
3 - 4	32 mph (51 km/h)
4 - 5	44 mph (71 km/h)

Information Provided by: DEALER E-PROCESS

Reverse

Note: *Do not shift the gearshift lever to reverse gear when your vehicle is moving. This can cause damage to the transmission.*

1. Fully depress the clutch pedal to disengage clutch.
2. Shift the gearshift lever to the neutral position and wait at least three seconds before moving it to reverse.

If reverse gear is not fully engaged, press the clutch pedal down and shift the gearshift lever to the neutral position. Release the clutch pedal for a moment, depress the clutch again and shift the gearshift lever to reverse.

Parking Your Vehicle

WARNING

Do not park your vehicle with the gearshift lever in the neutral position. Your vehicle may move unexpectedly and injure someone. Shift the gearshift lever to first gear and set the parking brake fully.

To park your vehicle:

1. Press the brake pedal and shift the gearshift lever to the neutral position.
2. Fully apply the parking brake and switch the ignition off.
3. Hold the clutch pedal down, and shift the gearshift lever to first gear.

MANUAL TRANSMISSION - 1.6L ECOBOOST™

Using the Clutch

Note: *Failure to fully depress the clutch pedal to the floor may cause increased shift efforts, prematurely wear transmission components or damage the transmission.*

Note: *Do not drive with your foot resting on the clutch pedal or use the clutch pedal to hold your vehicle at a standstill while waiting on a hill. These actions will reduce the life of the clutch and could nullify a clutch warranty claim.*

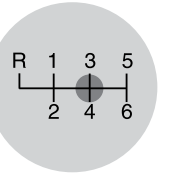

E144954

Manual transmission vehicles have a starter interlock that prevents cranking the engine unless the clutch pedal is fully depressed.

Starting Your Vehicle

WARNING

Make sure the floor mat is positioned correctly so that it does not interfere with the full extension of the clutch pedal.

1. Make sure the parking brake is fully set and shift the gearshift lever to the neutral position.
2. Fully depress the clutch pedal then start the engine.
3. Press the brake pedal and shift the gearshift lever to first or reverse gear.
4. Release the parking brake and slowly release the clutch pedal while slowly pressing on the accelerator.

During each shift, make sure you fully depress the clutch pedal.

Information Provided by:
DEALER E-PROCESS

Recommended Shift Speeds

Note: *Do not shift the gearshift lever to first gear when your vehicle is moving faster than 15 mph (24 km/h). This will damage the clutch.*

We recommend you change gear according to the following guide to achieve the best fuel economy for your vehicle.

Shift from	Recommended speed
1 - 2	12 mph (19 km/h)
2 - 3	23 mph (37 km/h)
3 - 4	32 mph (51 km/h)
4 - 5	41 mph (66 km/h)
5 - 6	42 mph (67 km/h)

Reverse

Note: *Do not shift the gearshift lever to reverse gear when your vehicle is moving. This can cause damage to the transmission.*

1. Fully depress the clutch pedal to disengage the clutch.
2. Shift the gearshift lever to the neutral position and wait at least three seconds before moving it to reverse.
3. Raise the collar below the gearshift lever to shift to reverse gear.

Note: *This is a lockout feature which protects the transmission from accidentally engaging reverse gear when intending to select first gear.*

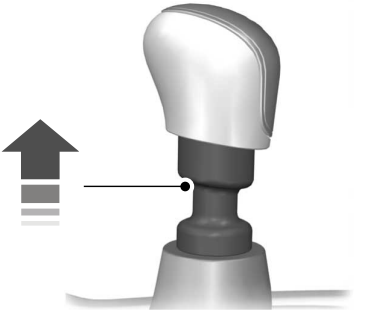

E99067

If reverse gear is not fully engaged, press the clutch pedal down and shift the gearshift lever to the neutral position. Release the clutch pedal for a moment, then raise the collar and shift the gearshift lever to reverse again.

Parking Your Vehicle

WARNING

Do not park your vehicle with the gearshift lever in the neutral position. Your vehicle may move unexpectedly and injure someone. Shift the gearshift lever to first gear and set the parking brake fully.

To park your vehicle:

1. Press the brake pedal and shift the gearshift lever to the neutral position.
2. Fully apply the parking brake and switch the ignition off.
3. Hold the clutch pedal down, and shift the gearshift lever to first gear.

Information Provided by: DEALER E-PROCESS

AUTOMATIC TRANSMISSION

WARNINGS

Always set the parking brake fully and make sure the gearshift is latched in **P** (Park). Turn the ignition to the off position and remove the key whenever you leave your vehicle.

Do not apply the brake and accelerator pedals simultaneously for more than three seconds as this limits engine rpm and labors the transmission. This may result in difficulty maintaining speed in traffic and could lead to serious injury.

Note: *When you switch the ignition off, the transmission will carry out a series of checks. You may hear slight clicking sounds. This is normal.*

We have designed your vehicle to improve fuel economy by reducing fuel usage compared to a traditional torque converter automatic transmission. When you take your foot off the accelerator pedal and your vehicle begins to slow down, this can feel like a light to medium braking sensation.

Selector Lever Positions

WARNING

You must press the brake pedal to apply the brakes before moving the transmission selector lever. Failure to keep the brakes applied until you are ready to move off may lead to an accident or injury.

E161746

P	Park
R	Reverse
N	Neutral
D	Drive
S	Sport mode or manual shifting
+	Manual shift up
-	Manual shift down

Press the button on the front of the transmission selector lever to change to each position.

The transmission selector lever position will be shown in the information display.

P (Park)

WARNINGS

You must only select **P** when your vehicle is stationary. Selecting **P** when your vehicle is moving will damage the transmission and may lead to an accident or injury.

Information Provided by:
DEALER E-PROCESS

WARNINGS

You must move the transmission selector lever to position **P** and fully apply the parking brake before you leave your vehicle. Failure to leave your vehicle securely parked may lead to an accident or injury.

Your vehicle will not move while the transmission selector lever is in **P**. You can start the engine with the transmission selector lever in this position.

Note: *An audible warning will sound if you open the driver's door and you have not moved the transmission selector lever to park.*

R (Reverse)

WARNING

You must only select **R** when your vehicle is stationary and the engine is at idle speed. Selecting **R** when your vehicle is moving or at a high engine speed will damage the transmission or lead to an accident or injury.

With the transmission selector lever in **R**, power is transmitted to the drive wheels to allow your vehicle to move backward. You cannot start the engine with the transmission selector lever in this position.

Note: *Always come to a complete stop before shifting the transmission selector lever out of reverse.*

N (Neutral)

With the transmission selector lever in **N**, power is not transmitted to the drive wheels and the transmission is not locked, it is possible your vehicle will move if the brakes are not applied. You can start the engine with the transmission selector lever in this position.

D (Drive)

With the transmission selector lever in **D**, your vehicle will shift automatically through the forward gears. You cannot start the engine with the transmission selector lever in this position.

The transmission will select the appropriate gear for optimum vehicle performance and economy based on ambient temperature, road gradient, vehicle load, speed and your driving style.

When you use Drive mode it provides a downshift function. See **Downshift** in this section.

Note: *A shift will occur only when your vehicle and engine speeds are appropriate.*

Sport Mode and Manual Shifting

Sport Mode

With the transmission selector lever in **S**, gears are selected quicker and at higher engine speeds. You cannot start the engine with the transmission selector lever in this position.

Sport mode will remain on until you either shift manually up or down the gears using the **+** or **-** buttons on the side of the transmission selector lever or you move the transmission selector lever to drive.

When you use Sport mode it provides a downshift function. See **Downshift** in this section.

Manual Shifting

WARNING

Do not permanently hold the **+** or **-** buttons in. This may damage the transmission and may lead to an accident or injury.

Press the **+** button to shift up and the **-** button to shift down.

Information Provided by: DEALER E-PROCESS

Gears may be skipped by pressing the **+** or **-** buttons repeatedly at short intervals.

We recommend you upshift according to the following guide to achieve the best fuel economy for your vehicle.

Shift From	Recommended Speed
1 - 2	15 mph (24 km/h)
2 - 3	25 mph (40 km/h)
3 - 4	40 mph (64 km/h)
4 - 5	45 mph (72 km/h)
5 - 6	50 mph (80 km/h)

Manual mode also provides a downshift function. See **Downshift** in this section.

Note: *The transmission will automatically upshift if the engine speed is too high or downshift if the engine speed is too low.*

Hints on Driving with an Automatic Transmission

WARNINGS

Do not apply the brake and accelerator pedals simultaneously for more than three seconds as this limits engine rpm and labors the transmission. This may make it difficult to maintain speeds in traffic and lead to an accident or injury.

Do not idle the engine for long periods of time in **D** with the brakes applied. This could damage the transmission and may lead to an accident or injury.

Note: *The system carries out a series of checks when you switch the ignition on and off. You may hear clicking sounds. This is normal.*

Moving off

1. Press the brake pedal to apply the brakes.
2. Move the transmission selector lever to **R**, **D** or **S**.
3. Release the parking brake.
4. Release the brake pedal and press the accelerator pedal.

Stopping

1. Release the accelerator pedal and press the brake pedal.
2. Apply the parking brake.
3. Move the transmission selector lever to **N** or **P**.

Downshift

Press the accelerator pedal fully with the transmission selector lever in either **D**, **S** mode or manual shifting position to select a lower gear for optimum performance. Release the accelerator pedal when you no longer require downshift.

If Your Vehicle Gets Stuck In Mud or Snow

If your vehicle gets stuck in mud or snow, it may be rocked out by shifting between **D** and **R**, stopping between shifts in a steady pattern. Press the accelerator lightly in each gear.

Note: *Do not rock your vehicle if the engine is not at normal operating temperature as this can damage the transmission.*

Note: *Do not rock your vehicle for more than a minute as this can damage the transmission or the tires and the engine may overheat.*

Information Provided by: DEALER E-PROCESS

Emergency Park Position Release Lever

WARNINGS

Do not drive your vehicle until you verify that the brake lamps are working. Failure to adhere to warning indicators may lead to an accident or injury.

If you release the parking brake and the brake warning lamp remains illuminated the brakes may not be working correctly. Have your vehicle checked by an authorized dealer as soon as possible. Failure to adhere to warning lamps and indicators may lead to an accident or injury.

Use the emergency **P** position release lever to move the transmission selector lever from the **P** position in the event of a malfunction or if your vehicle battery has no charge.

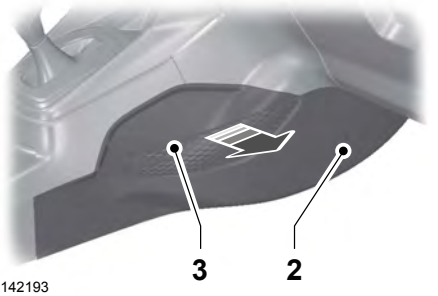

E142193

1. Apply the parking brake and switch the ignition off before carrying out this procedure.
2. Remove the retaining screw.
3. Remove the center console side panel.

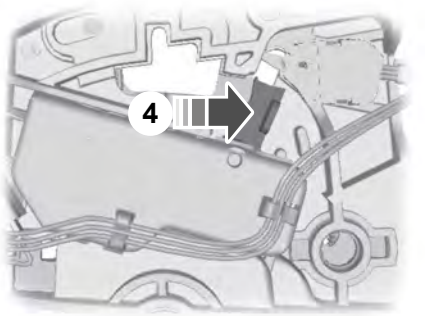

E142214

4. Press the brake pedal. Using a suitable tool rotate the lever forward while pulling the transmission selector lever out of the **P** position.

Note: *The emergency **P** position release lever is pink.*

Note: *See an authorized dealer as soon as possible if you use procedure.*

HILL START ASSIST (If Equipped)

WARNINGS

The system does not replace the parking brake. When you leave your vehicle, always apply the parking brake and move the transmission selector lever into position **P** (Park).

You must remain in your vehicle once you have activated the system.

During all times, you are responsible for controlling your vehicle, supervising the system and intervening, if required.

If the engine is revved excessively, or if a malfunction is detected, the system will be deactivated.

Information Provided by:
DEALER E-PROCESS

The system makes it easier to pull away when your vehicle is on a slope without the need to use the parking brake.

When the system is active, your vehicle will remain stationary on the slope for two to three seconds after you release the brake pedal. This allows you time to move your foot from the brake to the accelerator pedal. The brakes release automatically when the engine has sufficient torque to prevent your vehicle from rolling down the grade. This is an advantage when pulling away on a slope, (for example from a car park ramp, traffic lights or when reversing uphill into a parking space).

The system will activate automatically on any slope which can result in significant vehicle rollback.

Using Hill Start Assist

1. Press the brake pedal to bring your vehicle to a complete standstill. Keep the brake pedal pressed.
2. If the sensors detect that your vehicle is on a slope, the system will be activated automatically.
3. When you remove your foot from the brake pedal, your vehicle will remain on the slope without rolling away for approximately two or three seconds. This hold time will automatically be extended if you are in the process of driving off.
4. Drive off in the normal manner. The brakes will be released automatically.

Note: *Do not drive with your foot resting on the clutch pedal or use the clutch pedal to hold your vehicle at a standstill while waiting on a hill. These actions will reduce the life of the clutch.*

Note: *Do not use the accelerator to hold your vehicle at a standstill while waiting on a hill. This will overheat the transmission.*

Switching the System On and Off

Note: *The system can only be switched on and off for manual transmissions.*

Note: *Once you have switched off the system, it will remain off until you switch it on again.*

Your vehicle comes with the system already enabled. If desired, you can disable the feature: See (page 84).

Information Provided by:
DEALER E-PROCESS

GENERAL INFORMATION

WARNING

The system does not relieve you of your responsibility to drive with due care and attention.

Note: *Occasional brake noise is normal. If a metal-to-metal, continuous grinding or continuous squeal sound is present, the brake linings may be worn-out. If the vehicle has continuous vibration or shudder in the steering wheel while braking, have your vehicle checked by an authorized dealer.*

Note: *Brake dust may accumulate on the wheels, even under normal driving conditions. Some dust is inevitable as the brakes wear. See* ***Cleaning the Alloy Wheels*** *(page 207).*

Wet brakes result in reduced braking efficiency. Gently press the brake pedal a few times when driving from a car wash or standing water to dry the brakes.

Brake Over Accelerator

In the event that the accelerator pedal becomes stuck or entrapped, apply firm pressure to the brake pedal to slow your vehicle and reduce engine power. If you experience this condition, apply the brakes and bring your vehicle to a safe stop. Move the transmission to park (P), switch the engine off and apply the parking brake. Inspect the accelerator pedal for any interference. If none are found and the condition persists, have your vehicle towed to the nearest authorized dealer.

Emergency Brake Assist

Brake assist detects when you rapidly brake by measuring the rate at which you press the brake pedal. It provides maximum braking efficiency as long as you press the pedal. Emergency brake assist can reduce stopping distances in critical situations.

Anti-lock Brake System

This system helps you maintain steering control and vehicle stability during emergency stops by keeping the brakes from locking.

This lamp momentarily illuminates when you switch the ignition on. If the light does not illuminate during start up, remains on or flashes, the system may be disabled. Have the system checked by an authorized dealer. If the anti-lock brake system is disabled, normal braking is still effective.

If the brake warning lamp illuminates when you release the parking brake, have the system checked by an authorized dealer.

HINTS ON DRIVING WITH ANTI-LOCK BRAKES

Note: *When the system is operating, the brake pedal will pulse and may travel further. Maintain pressure on the brake pedal. You may also hear a noise from the system. This is normal.*

The anti-lock braking system will not eliminate the risks when:

- You drive too closely to the vehicle in front of you.
- Your vehicle is hydroplaning.
- You take corners too fast.
- The road surface is poor.

Information Provided by:
DEALER E-PROCESS

PARKING BRAKE

Vehicles With Automatic Transmission

WARNING

Always set the parking brake fully and leave your vehicle with the transmission selector lever in position P.

Note: *If you park your vehicle on a hill and facing uphill move the transmission selector lever to position P and turn the steering wheel away from the curb.*

Note: *If you park your vehicle on a hill and facing downhill move the transmission selector lever to position P and turn the steering wheel toward the curb.*

Vehicles With Manual Transmission

WARNING

Always set the parking brake fully.

Note: *If you park your vehicle on a hill and facing uphill select first gear and turn the steering wheel away from the curb.*

Note: *If you park your vehicle on a hill and facing downhill select reverse gear and turn the steering wheel toward the curb.*

All Vehicles

Note: *Do not press the release button while pulling the lever up.*

To apply the parking brake:

1. Press the foot brake pedal firmly.
2. Pull the parking brake lever up to its fullest extent.

To release the parking brake:

1. Press the brake pedal firmly.
2. Pull the lever up slightly.
3. Press the release button and push the lever down.

Information Provided by:
DEALER E-PROCESS

PRINCIPLE OF OPERATION

The traction control system helps avoid drive wheel spin and loss of traction.

If your vehicle begins to slide, the system applies the brakes to individual wheels and, when needed, reduces engine power at the same time. If the wheels spin when accelerating on slippery or loose surfaces, the system reduces engine power in order to increase traction.

USING TRACTION CONTROL

WARNING

The stability and traction control light illuminates steadily if the system detects a failure. Make sure you did not manually disable the traction control system using the information display controls or the switch. If the stability control and traction control light is still illuminating steadily, have the system serviced by an authorized dealer immediately. Operating your vehicle with the traction control disabled could lead to an increased risk of loss of vehicle control, vehicle rollover, personal injury and death.

The system automatically turns on each time you switch the ignition on.

If your vehicle is stuck in mud or snow, switching traction control off may be beneficial as this allows the wheels to spin.

Note: *When you switch traction control off, stability control remains fully active.*

Switching the System Off

When you switch the system off or on, a message appears in the information display showing system status.

You can switch the system off by either using the information display controls or the switch.

Using the Information Display Controls

You can switch this feature off or on in the information display. See **General Information** (page 84).

Using a Switch (If Equipped)

Use the traction control switch on the instrument panel to switch the system off or on.

The switch illuminates when traction control is off.

System Indicator Lights and Messages

The stability and traction control light:

- Temporarily illuminates on engine start-up.
- Flashes when a driving condition activates either of the systems.
- Illuminates if a problem occurs in either of the systems.

The stability and traction control off light temporarily illuminates on engine start-up and stays on when you switch the traction control system off.

Information Provided by:
DEALER E-PROCESS

PRINCIPLE OF OPERATION

Electronic Stability Program

WARNINGS

The system does not relieve you of your responsibility to drive with due care and attention. Failure to drive with due care and attention could lead to loss of vehicle control.

Vehicle modifications involving braking system, aftermarket roof racks, suspension, steering system, tire construction and wheel and tire size may change the handling characteristics of the vehicle and may adversely affect the performance of the AdvanceTrac system. In addition, installing any stereo loudspeakers may interfere with and adversely affect the AdvanceTrac system. Install any aftermarket stereo loudspeaker as far as possible from the front center console, the tunnel, and the front seats in order to minimize the risk of interfering with the AdvanceTrac sensors. Reducing the effectiveness of the AdvanceTrac system could lead to an increased risk of loss of vehicle control, vehicle rollover, personal injury and death.

Remember that even advanced technology cannot defy the laws of physics. It's always possible to lose control of a vehicle due to inappropriate driver input for the conditions. Aggressive driving on any road condition can cause you to lose control of your vehicle increasing the risk of personal injury or property damage. Activation of the AdvanceTrac system is an indication that at least some of the tires have exceeded their ability to grip the road; this could reduce the operator's ability to control the vehicle potentially resulting in a loss of vehicle control, vehicle rollover, personal injury and death. If your AdvanceTrac system activates, SLOW DOWN.

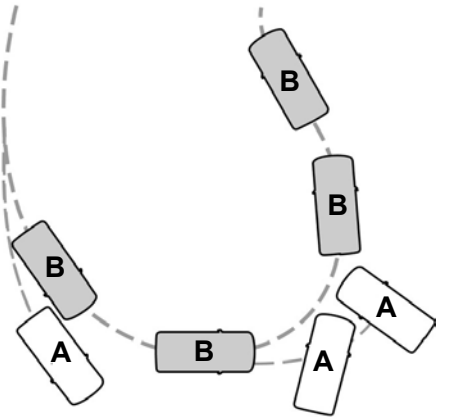

E72903

A Without Advance Trac

B With Advance Trac

The system supports stability when your vehicle starts to slide away from your intended path. This is performed by braking individual wheels and reducing engine torque as needed.

The system also provides an enhanced traction control function by reducing engine torque if the wheels spin when you accelerate. This improves your ability to pull away on slippery roads or loose surfaces, and improves comfort by limiting wheel spin in hairpin bends.

Stability Control Warning Lamp

While driving, it flashes when the system is operating. See **Warning Lamps and Indicators** (page 80).

Information Provided by: DEALER E-PROCESS

USING STABILITY CONTROL - 1.0L ECOBOOST™/1.6L DURATEC-16V TI-VCT (SIGMA)

Note: *The system automatically turns on each time you switch the ignition on.*

You can switch the traction control system off and on . See **Using Traction Control** (page 133).

USING STABILITY CONTROL - 1.6L ECOBOOST™

E156922

Note: *The system will switch on automatically every time you switch the ignition on.*

Note: *You can also switch the system off and on using the information display. See* ***Information Displays*** *(page 84).*

Switching Sport Mode On

Press the switch. It will illuminate and a message will be displayed in the information display. Press the switch again to return the system to normal mode.

Note: *In this mode stability control is only reduced and not switched off completely.*

Switching the System Off

Press and hold the switch for approximately five seconds. It will illuminate and a message will be displayed in the information display. Press the switch again to return the system to normal mode.

Information Provided by:
DEALER E-PROCESS

PRINCIPLE OF OPERATION

WARNINGS

The system does not relieve you of your responsibility to drive with due care and attention.

If your vehicles has a non-Ford approved trailer tow module the system may not correctly detect objects.

The sensors may not detect objects in heavy rain or other conditions that cause disruptive reflections.

The sensors may not detect objects with surfaces that absorb ultrasonic waves.

The system does not detect objects that are moving away from your vehicle. They will only be detected shortly after they start to move toward your vehicle.

Take particular care when reversing with a tow ball arm or a rear fitted accessory. For example, a bicycle carrier. The rear parking aid will only indicate the approximate distance from the rear bumper to an object.

Note: *If you use a high pressure spray to wash your vehicle, only spray the sensors briefly from a distance not less than 8 in (20 cm).*

Note: *If your vehicle has a tow ball arm, the system is turned off automatically when trailer lamps (or lighting boards) are connected to the 13-pin socket through a Ford approved trailer tow module.*

Note: *Keep the sensors free from dirt, ice or snow. Do not clean with sharp objects.*

Note: *The system may emit false alerts if it detects a signal using the same frequency as the sensors or if your vehicle is fully loaded.*

Note: *The outer sensors may detect the side walls of a garage. If the distance between the outer sensors and the side wall remains constant for three seconds, the alert will turn off. As you continue the inner sensors will detect objects directly behind your vehicle.*

PARKING AID

WARNINGS

To help avoid personal injury, read and understand the limitations of the system as contained in this section. Sensing is only an aid for some (generally large and fixed) objects when moving in reverse on a flat surface at parking speeds. Traffic control systems, inclement weather, air brakes and external motors and fans may also affect the function of the sensing system. This may include reduced performance or a false activation.

To help avoid personal injury, always use caution when moving in reverse and when using the sensing system.

This system is not designed to prevent contact with small or moving objects. The system is designed to provide a warning to assist the driver in detecting large stationary objects to avoid damaging the vehicle. The system may not detect smaller objects, particularly those close to the ground.

Certain add-on devices such as large trailer hitches, bike or surfboard racks and any device that may block the normal detection zone of the system, may create false audible warnings.

Note: *Keep the sensors located on the bumper or fascia free from snow, ice and large accumulations of dirt. If the sensors are covered, the system's accuracy can be affected. Do not clean the sensors with sharp objects.*

Information Provided by: DEALER E-PROCESS

Note: *If your vehicle sustains damage to the bumper or fascia, leaving it misaligned or bent, the sensing zone may be altered causing inaccurate measurement of obstacles or false alarms.*

The system warns you of obstacles within a certain range of the bumper area.

When receiving a detection warning, the radio volume is reduced to a predetermined level. After the warning goes away, the radio volume returns to the previous level.

Rear Sensing System

The rear sensors are only active when you move the transmission selector lever to position **R** (reverse). As your vehicle moves closer to the obstacle, the rate of the audible warning increases. When the obstacle is fewer than 12 inches (30 centimeters) away, the audible warning sounds continuously. If a stationary or receding object is detected farther than 12 inches (30 centimeters) from the side of your vehicle, the audible warning sounds for only three seconds. Once the system detects an object approaching, the audible warning sounds again.

E130178

A Coverage area of up to 72 inches (183 centimeters) from the rear bumper (with a decreased coverage area at the outer corners of the bumper).

The system detects certain objects when you move the transmission selector lever to position **R** (reverse):

- and your vehicle is moving toward a stationary object at a speed of 3 mph (5 km/h) or less
- but your vehicle is not moving, and a moving object is approaching the rear of your vehicle at a speed of 3 mph (5 km/h) or less
- and your vehicle is moving at a speed of less than 3 mph (5 km/h) and a moving object is approaching the rear of your vehicle at a speed of less than 3 mph (5 km/h).

Move the transmission selector lever from position **R** (reverse) to turn the system off. If a fault is present in the system, a warning message appears in the information display and does not allow you to switch the system on.

Information Provided by: DEALER E-PROCESS

REAR VIEW CAMERA (If Equipped)

WARNINGS

The operation of the camera may vary depending on the ambient temperature, vehicle and road conditions.

Objects in the display are closer than they appear.

Do not place objects in front of the camera.

The rear view camera system is a reverse aid supplement device that still requires the driver to use it in conjunction with the interior and exterior mirrors for maximum coverage.

The camera is on the liftgate or luggage compartment lid.

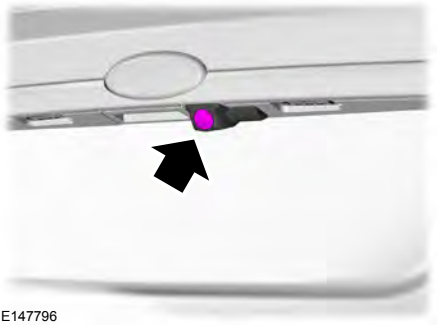

E147796

Switching the Rear View Camera On

WARNING

The camera may not detect objects that are very close to your vehicle.

Switch the ignition on and shift into reverse (R).

The image will display on the screen.

The system may not correctly operate in any of the following conditions:

- Dark areas.
- Intense light areas.
- If there is a sudden change to the ambient temperature.
- If the camera is wet.
- If the camera is dirty.
- If the camera is obstructed.

Using the Display

WARNING

Objects above the camera may not be visible. Check the area behind your vehicle when necessary.

If the vehicle battery is disconnected, the guidelines are not fully functional directly after the battery is reconnected. The guidelines become fully functional after you drive your vehicle as straight as possible for five minutes at a minimum speed of 31 mph (50 km/h).

Note: *When reversing with a trailer the camera shows the direction of your vehicle and not the direction of the trailer.*

Note: *If the camera image is not clear, clean the camera lens with a soft cloth.*

Note: *If the image comes on when the transmission is not in reverse (R), the system requires service.*

Vehicles with Parking Aid

The display shows colored distance bars. This indicates the approximate distance from the rear bumper to an object.

Information Provided by: DEALER E-PROCESS

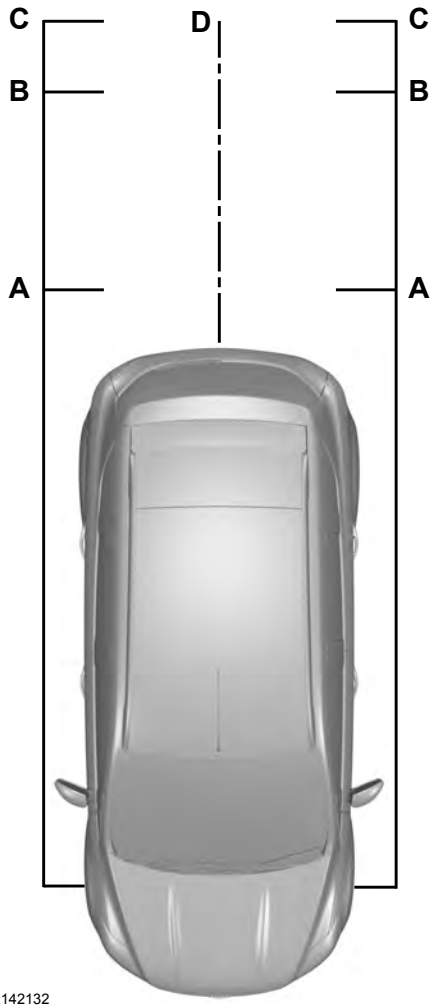

A Red - Zone.

B Yellow - Zone.

C Green - Zone.

D Black - center line of the projected vehicle path.

Distance markers are only a guide and are calculated for unloaded vehicles on an even road surface.

Switching the Rear View Camera Off

Shift from reverse (R).

Note: *The system will automatically turn off once your vehicle speed has reached approximately 7 mph (12 km/h).*

Information Provided by:
DEALER E-PROCESS

PRINCIPLE OF OPERATION

WARNING

The system does not relieve you of your responsibility to drive with due care and attention.

Cruise control allows you to control your speed using the switches on the steering wheel. You can use cruise control when you exceed approximately 20 mph (30 km/h).

USING CRUISE CONTROL

WARNINGS

Do not use cruise control on winding roads, in heavy traffic or when the road surface is slippery. This could result in loss of vehicle control, serious injury or death.

When you are going downhill, your speed may increase above the set speed. The system will not apply the brakes. Change down a gear to assist the system in maintaining the set speed. Failure to do so could result in loss of vehicle control, serious injury or death.

E102679

The cruise controls are on the steering wheel.

Note: *Cruise control will disengage if your vehicle speed decreases more than 10 mph (16 km/h) below your set speed while driving uphill.*

Switching Cruise Control On

Press and release **ON**.

Setting the Cruise Speed

1. Drive to desired speed.
2. Press and release **SET+**.
3. Take your foot off the accelerator pedal.

The indicator displays in the instrument cluster.

Changing the Set Speed

- Press and release **SET+** or **SET-**. When you select km/h as the display measurement in the Information display the set speed changes in approximately 1 km/h increments. When you select mph as the display measurement in the information display the set speed changes in approximately 1 mph increments.
- Press the accelerator or brake pedal until you reach the desired speed. Press and release **SET+**.
- Press and hold **SET+** or **SET-**. Release the control when you reach the desired speed.

Canceling the Set Speed

Press and release **CAN**, or tap the brake pedal. The indicator no longer displays in the instrument cluster. The set speed will not be erased.

Note: *For vehicles with manual transmission, depressing the clutch pedal will also cancel the set speed.*

Information Provided by: DEALER E-PROCESS

Resuming the Set Speed

Press and release **RES**. The indicator displays in the instrument cluster.

Switching Cruise Control Off

Press and release **OFF** when the system is in stand by mode or switch the ignition off.

Note: *You erase the set speed when you switch the system off.*

Information Provided by:
DEALER E-PROCESS

STEERING

Electric Power Steering

WARNINGS

The electric power steering system has diagnostic checks that continuously monitor the system. If a fault is detected, a message displays in the information display. Stop your vehicle as soon as it is safe to do so. Switch the ignition off. After at least 10 seconds, switch the ignition on and watch the information display for a steering system warning message. If a steering system warning message returns, have the system checked by an authorized dealer.

If the system detects an error, you may not feel a difference in the steering, however a serious condition may exist. Obtain immediate service from an authorized dealer, failure to do so may result in loss of steering control.

Your vehicle has an electric power steering system. There is no fluid reservoir. No maintenance is required.

If your vehicle loses electrical power while you are driving, electric power steering assistance is lost. The steering system still operates and you can steer your vehicle manually. Manually steering your vehicle requires more effort.

Extreme continuous steering may increase the effort required for you to steer your vehicle. This increased effort prevents overheating and permanent damage to the steering system. You do not lose the ability to steer your vehicle manually. Typical steering and driving maneuvers allow the system to cool and return to normal operation.

Steering Tips

If the steering wanders or pulls, check for:

- Correct tire pressures.
- Uneven tire wear.
- Loose or worn suspension components.
- Loose or worn steering components.
- Improper vehicle alignment.

Note: *A high crown in the road or high crosswinds may also make the steering seem to wander or pull.*

Adaptive Learning

The electronic power steering system adaptive learning helps correct road irregularities and improves overall handling and steering feel. It communicates with the brake system to help operate advanced stability control and accident avoidance systems. Additionally, whenever the battery is disconnected or a new battery installed, you must drive your vehicle a short distance before the system relearns the strategy and reactivates all systems.

Information Provided by: DEALER E-PROCESS

REAR UNDER FLOOR STORAGE (If Equipped)

Adjustable Load Floor

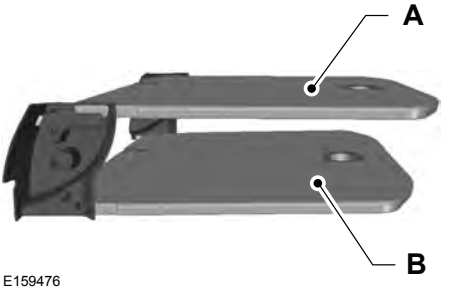

E159476

A Upper position

B Lower position

The load floor can be placed in either position on shelves located at the rear of the luggage compartment trim.

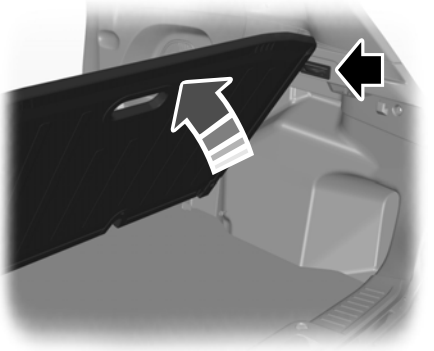

E157606

You can hold the load floor open. Use the stoppers located at the side of the luggage compartment to hold the floor up.

CARGO NETS (If Equipped)

Installing and Removing the Cargo Net

Installing the Cargo Net

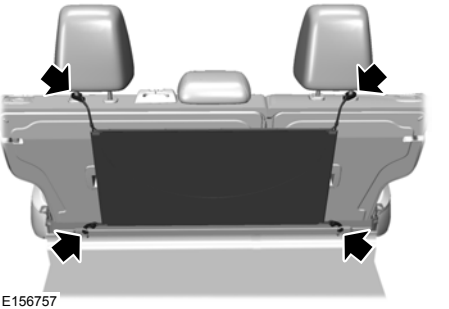

E156757

1. Raise the rear outer head restraints. See **Head Restraints** (page 103).
2. Attach the top securing clips to the head restraint outer posts.
3. Attach the bottom securing clips to the anchor points.

Removing the Cargo Net

1. Raise the rear outer head restraints. See **Head Restraints** (page 103).
2. Detach the top and bottom securing clips.

LUGGAGE COVERS (If Equipped)

WARNING

Do not place objects on the luggage cover.

Information Provided by: DEALER E-PROCESS

Removing the Cover

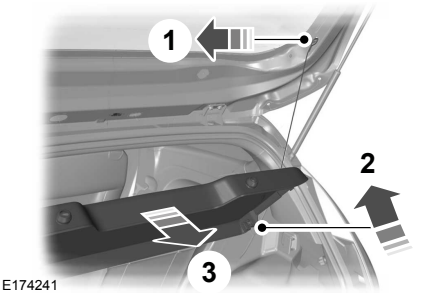

E174241

LOAD LIMIT

Vehicle Loading - with and without a Trailer

This section will guide you in the proper loading of your vehicle, trailer or both, to keep your loaded vehicle weight within its design rating capability, with or without a trailer. Properly loading your vehicle will provide maximum return of vehicle design performance. Before loading your vehicle, familiarize yourself with the following terms for determining your vehicle's weight ratings, with or without a trailer, from the vehicle's Tire Label or Safety Compliance Certification Label:

Base Curb Weight - is the weight of the vehicle including full fluids and all standard equipment. It does not include passengers, cargo, or optional equipment.

Vehicle Curb Weight - is the weight of your new vehicle when you picked it up from your authorized dealer plus any aftermarket equipment.

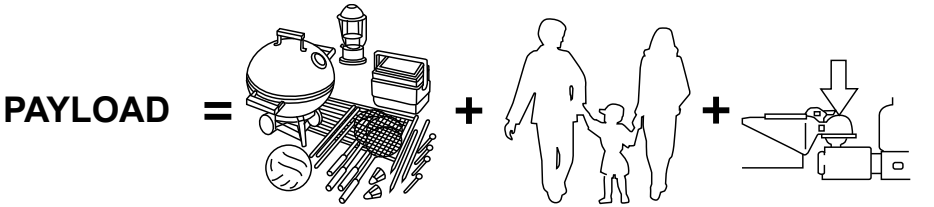

E143816

Payload - is the combined weight of cargo and passengers that the vehicle is carrying. The maximum payload for your vehicle can be found on the Tire Label on the B-Pillar or the edge of the driver door (vehicles exported outside the US and Canada may not have a Tire Label). Look for **"THE COMBINED WEIGHT OF OCCUPANTS AND CARGO SHOULD NEVER EXCEED XXX**

Information Provided by:
DEALER E-PROCESS

kg OR XXX lb.” for maximum payload. The payload listed on the Tire Label is the maximum payload for the vehicle as built by the assembly plant. If you install any aftermarket or authorized-dealer installed equipment on the vehicle, you must subtract the weight of the equipment from the payload listed on the Tire Label in order to determine the new payload.

WARNING

The appropriate loading capacity of your vehicle can be limited either by volume capacity (how much space is available) or by payload capacity (how much weight the vehicle should carry). Once you have reached the maximum payload of your vehicle, do not add more cargo, even if there is space available. Overloading or improperly loading your vehicle can contribute to loss of vehicle control and vehicle rollover.

Example only:

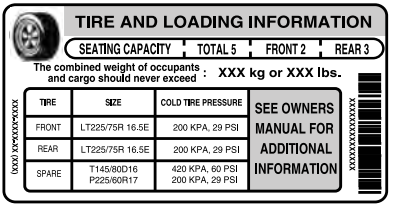

E210944

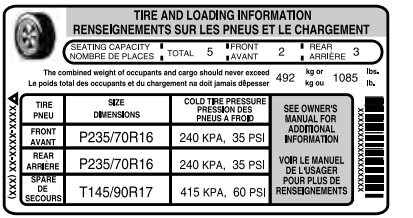

E210945

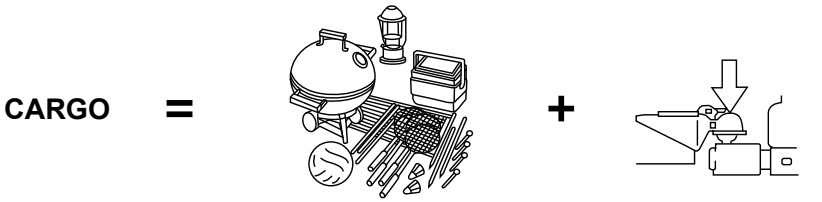

E143817

Information Provided by: DEALER E-PROCESS

Cargo Weight - includes all weight added to the Base Curb Weight, including cargo and optional equipment. When towing, trailer tongue load or king pin weight is also part of cargo weight.

GAW (Gross Axle Weight) - is the total weight placed on each axle (front and rear) including vehicle curb weight and all payload.

GAWR (Gross Axle Weight Rating) - is the maximum allowable weight that can be carried by a single axle (front or rear). These numbers are shown on the Safety Compliance Certification Label. The label shall be affixed to either the door hinge pillar, door-latch post, or the door edge that meets the door-latch post, next to the driver's seating position. **The total load on each axle must never exceed its Gross Axle Weight Rating.**

Note: *For trailer towing information refer to the RV and Trailer Towing Guide available at an authorized dealer.*

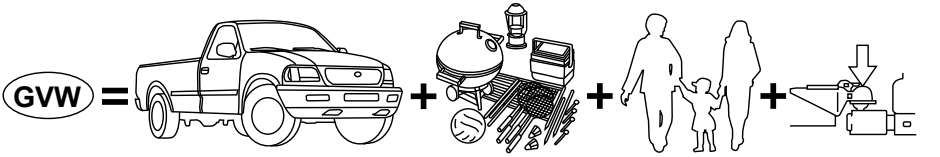

E143818

GVW (Gross Vehicle Weight) - is the Vehicle Curb Weight, plus cargo, plus passengers.

GVWR (Gross Vehicle Weight Rating) - is the maximum allowable weight of the fully loaded vehicle (including all options, equipment, passengers and cargo). It is shown on the Safety Compliance Certification Label. The label shall be affixed to either the door hinge pillar, door-latch post, or the door edge that meets the door-latch post, next to the driver's seating position. **The Gross Vehicle Weight must never exceed the Gross Vehicle Weight Rating.**

Information Provided by:
DEALER E-PROCESS

Example only:

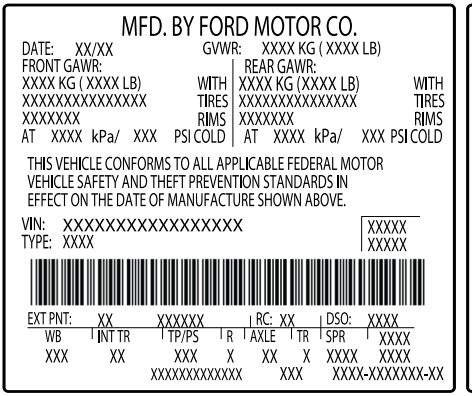

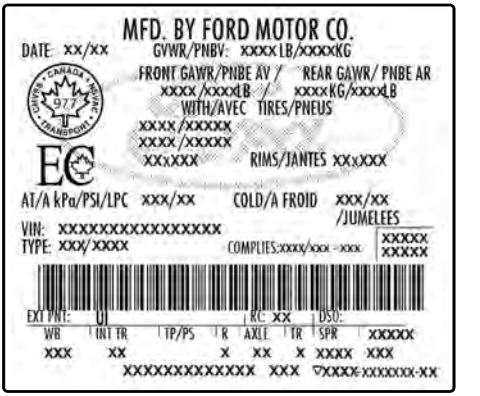

E198828

WARNING

Exceeding the Safety Compliance Certification Label vehicle weight rating limits could result in substandard vehicle handling or performance, engine, transmission and/or structural damage, serious damage to the vehicle, loss of control and personal injury.

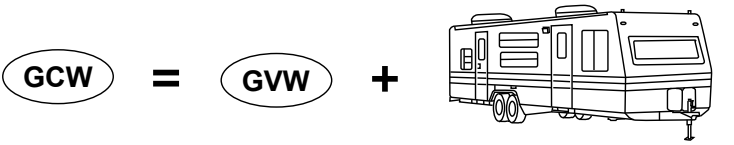

E143819

Information Provided by: DEALER E-PROCESS

GCW (Gross Combined Weight) - is the Gross Vehicle Weight plus the weight of the fully loaded trailer.

GCWR (Gross Combined Weight Rating) - is the maximum allowable weight of the vehicle and the loaded trailer, including all cargo and passengers, that the vehicle can handle without risking damage. (Important: The towing vehicle's braking system is rated for operation at Gross Vehicle Weight Rating, not at Gross Combined Weight Rating.) Separate functional brakes should be used for safe control of towed vehicles and for trailers where the Gross Combined Weight of the towing vehicle plus the trailer exceed the Gross Vehicle Weight Rating of the towing vehicle. **The Gross Combined Weight must never exceed the Gross Combined Weight Rating.**

Maximum Loaded Trailer Weight - is the highest possible weight of a fully loaded trailer the vehicle can tow. It assumes a vehicle with mandatory options, driver and front passenger weight (150 pounds [68 kilograms] each), no cargo weight (internal or external) and a tongue load of 10–15% (conventional trailer) or king pin weight of 15–25% (fifth wheel trailer). Consult an authorized dealer (or the RV and Trailer Towing Guide available at an authorized dealer) for more detailed information.

Tongue Load or Fifth Wheel King Pin Weight - refers to the amount of the weight that a trailer pushes down on a trailer hitch.

Examples: For a 5000 pound (2268 kilogram) conventional trailer, multiply 5000 by 0.10 and 0.15 to obtain a proper tongue load range of 500 to 750 pounds (227 to 340 kilograms). For an 11500 pound (5216 kilogram) fifth wheel trailer, multiply by 0.15 and 0.25 to obtain a proper king pin load range of 1725 to 2875 pounds (782 to 1304 kilograms).

WARNINGS

Do not exceed the GVWR or the GAWR specified on the Safety Compliance Certification Label.

Do not use replacement tires with lower load carrying capacities than the original tires because they may lower the vehicle's GVWR and GAWR limitations. Replacement tires with a higher limit than the original tires do not increase the GVWR and GAWR limitations.

Exceeding any vehicle weight rating limitation could result in serious damage to the vehicle and/or personal injury.

Steps for determining the correct load limit:

Information Provided by: DEALER E-PROCESS

1. Locate the statement "The combined weight of occupants and cargo should never exceed XXX kg or XXX lb." on your vehicle's placard.
2. Determine the combined weight of the driver and passengers that will be riding in your vehicle.
3. Subtract the combined weight of the driver and passengers from XXX kg or XXX lb.
4. The resulting figure equals the available amount of cargo and luggage load capacity. For example, if the "XXX" amount equals 1,400 lb. and there will be five 150 lb. passengers in your vehicle, the amount of available cargo and luggage load capacity is 650 lb. (1400-750 (5 x 150) = 650 lb.)
5. Determine the combined weight of luggage and cargo being loaded on the vehicle. That weight may not safely exceed the available cargo and luggage load capacity calculated in Step 4.
6. If your vehicle will be towing a trailer, load from your trailer will be transferred to your vehicle. Consult this manual to determine how this reduces the available cargo and luggage load capacity of your vehicle.

The following gives you a few examples on how to calculate the available amount of cargo and luggage load capacity:

*Suppose your vehicle has a 1400-pound (635-kilogram) cargo and luggage capacity. You decide to go golfing. Is there enough load capacity to carry you, four of your friends and all the golf bags? You and four friends average 220 pounds (99 kilograms) each and the golf bags weigh approximately 30 pounds (13.5 kilograms) each. The calculation would be: 1400 - (5 x 220) - (5 x 30) = 1400 - 1100 - 150 = 150 pounds. Yes, you have enough load capacity in your vehicle to transport four friends and your golf bags. In metric units, the calculation would be: 635 kilograms - (5 x 99 kilograms) - (5 x 13.5 kilograms) = 635 - 495 - 67.5 = 72.5 kilograms.

*Suppose your vehicle has a 1400-pound (635-kilogram) cargo and luggage capacity. You and one of your friends decide to pick up cement from the local home improvement store to finish that patio you have been planning for the past two years. Measuring the inside of the vehicle with the rear seat folded down, you have room for twelve 100-pound (45-kilogram) bags of cement. Do you have enough load capacity to transport the cement to your home? If you and your friend each weigh 220 pounds (99 kilograms), the calculation would be: 1400 - (2 x 220) - (12 x 100) = 1400 - 440 - 1200 = - 240 pounds. No, you do not have enough cargo capacity to carry that much weight. In metric units, the calculation would

Information Provided by: DEALER E-PRACTICE

be: 635 kilograms - (2 x 99 kilograms) - (12 x 45 kilograms) = 635 - 198 - 540 = -103 kilograms. You will need to reduce the load weight by at least 240 pounds (104 kilograms). If you remove three 100-pound (45-kilogram) cement bags, then the load calculation would be: 1400 - (2 x 220) - (9 x 100) = 1400 - 440 - 900 = 60 pounds. Now you have the load capacity to transport the cement and your friend home. In metric units, the calculation would be: 635 kilograms - (2 x 99 kilograms) - (9 x 45 kilograms) = 635 - 198 - 405 = 32 kilograms.

The above calculations also assume that the loads are positioned in your vehicle in a manner that does not overload the Front or the Rear Gross Axle Weight Rating specified for your vehicle on the Safety Compliance Certification Label. The label shall be affixed to either the door hinge pillar, door-latch post, or the door edge that meets the door-latch post, next to the driver's seating position.

Information Provided by:
DEALER E-PROCESS

TOWING A TRAILER

WARNING

Your vehicle is not approved for trailer towing.

TRANSPORTING THE VEHICLE

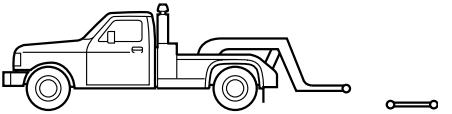

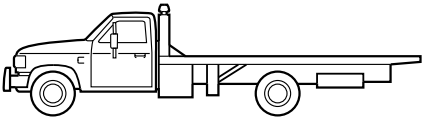

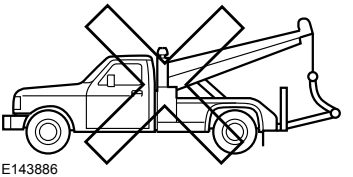

E143886

If you need to have your vehicle towed, contact a professional towing service or, if you are a member of a roadside assistance program, your roadside assistance service provider.

It is recommended that your vehicle be towed with a wheel lift and dollies or flatbed equipment. Do not tow with a slingbelt. Ford Motor Company has not approved a slingbelt towing procedure. If the vehicle is towed incorrectly, or by any other means, vehicle damage may occur.

Ford Motor Company produces a towing manual for all authorized tow truck operators. Have your tow truck operator refer to this manual for proper hook-up and towing procedures for your vehicle.

You can tow your vehicle from the front with wheel lift equipment to raise the front wheels off the ground. We recommend that you place the rear wheels on a dolly to prevent damage to the rear of your vehicle.

You can tow your vehicle from the rear with wheel lift equipment.

Note: *You must place the front wheels on a dolly to prevent damage to the transmission.*

TOWING THE VEHICLE ON FOUR WHEELS

Emergency Towing

If your vehicle is disabled without access to wheel dollies, a car-hauling trailer, or a flatbed transport vehicle it can be flat-towed with all wheels on the ground.

You may do this under the following conditions:

- Your vehicle is facing forward so that it is towed in a forward direction.
- The transmission gear shift lever is placed in position **N**. If the transmission gear shift lever cannot be moved to position **N**, it may need to be overridden. See **Transmission** (page 123).

Information Provided by: DEALER E-PROCESS

- Maximum speed is 35 mph (56 km/h).
- Maximum distance is 50 miles (80 kilometers).

Recreational Towing

Note: *Put your climate control system in recirculated air mode to prevent exhaust fumes from entering the vehicle.*

Follow these guidelines if you have a need for recreational (RV) towing. An example of recreational towing would be towing your vehicle behind a motorhome. These guidelines are designed to ensure that your transmission is not damaged.

Vehicles with a Manual Transmission

Your vehicle can be towed with all four wheels on the ground or with the front wheels off the ground by using a tow dolly. If you are using a tow dolly follow the instructions specified by the equipment provider. If you tow your vehicle with all wheels on the ground, follow these instructions:

1. Tow only with your vehicle in the forward direction. Release the parking brake.
2. Place the transmission in neutral.

Note: *Do not exceed 70 mph (113 km/h) when towing your vehicle.*

Vehicles with an Automatic Transmission - with Ignition Switch

Note: *There must be battery power to properly move the transmission's internal components to neutral in step 3. Also, moving the gearshift to the neutral position without first turning the ignition to the on* ***II*** *position limits the towing capability to 35 mph (56 km/h) and 50 miles (80 kilometers).*

1. Release the parking brake.
2. Switch the ignition to the on (**II**) position.
3. Press the brake pedal, then move the gearshift to the neutral position.
4. Wait for a message indicating that the transmission is ready in the information and entertainment display, then switch the ignition off and release the brake pedal.
5. Disconnect the negative (black) cable from the battery. The anti-theft system is disabled until the battery cable is reconnected. See **Changing the 12V Battery** (page 186).

Note: *The maximum towing speed is 70 mph (113 km/h).*

Note: *There is no limit on towing distance.*

After towing, start the engine within 15 minutes of reconnecting the battery cable. See **Changing the 12V Battery** (page 186).

Vehicles with an Automatic Transmission - with Keyless Starting

Note: *There must be battery power to properly move the transmission's internal components to neutral in step 3. Also, moving the gearshift to the neutral position without first turning the ignition to the on* ***II*** *position limits the towing capability to 35 mph (56 km/h) and 50 miles (80 kilometers).*

1. Release the parking brake.
2. Switch the ignition on by pressing the keyless start button, but do not apply the brake pedal.
3. Press the brake pedal, then move the gearshift to the neutral position. Release the brake pedal.
4. Wait for a message indicating that the transmission is ready in the information and entertainment display, then switch the ignition off by pressing the keyless start button.

Information Provided by: DEALER E-PROCESS

5. Disconnect the negative (black) cable from the battery. The door key is needed to lock and unlock doors when the battery cable is disconnected. Also, the anti-theft system is disabled until the battery cable is reconnected. See **Changing the 12V Battery** (page 186).

Note: *The maximum towing speed is 70 mph (113 km/h).*

Note: *There is no limit on towing distance.*

After towing, start the engine within 15 minutes of reconnecting the battery cable. See **Changing the 12V Battery** (page 186).

Information Provided by:
DEALER E-PROCESS

BREAKING-IN

You need to break in new tires for approximately 300 miles (480 kilometers). During this time, your vehicle may exhibit some unusual driving characteristics.

Avoid driving too fast during the first 1000 miles (1600 kilometers). Vary your speed frequently and change up through the gears early. Do not labor the engine.

Do not tow during the first 1000 miles (1600 kilometers).

ECONOMICAL DRIVING

Fuel economy is affected by several things such as how you drive, the conditions you drive under and how you maintain your vehicle.

There are some things to keep in mind that may improve your fuel economy:

- Accelerate and slow down in a smooth, moderate fashion.
- Drive at steady speeds.
- Anticipate stops; slowing down may eliminate the need to stop.
- Combine errands and minimize stop-and-go driving(When running errands, go to the furthest destination first and then work your way back home).
- Close the windows for high-speed driving.
- Drive at reasonable speeds.
- Keep the tires properly inflated and use only the recommended size.
- Use the recommended engine oil.
- Perform all regularly scheduled maintenance.

There are also some things you may want to avoid doing because they reduce your fuel economy:

- Avoid sudden or hard accelerations.
- Avoid revving the engine before turning off the car.
- Avoid long idle periods.
- Do not warm up your vehicle on cold mornings.
- Reduce the use of air conditioning and heat.
- Avoid using speed control in hilly terrain.
- Do not rest your foot on the brake pedal while driving.
- Avoid carrying unnecessary weight.
- Avoid adding particular accessories to your vehicle (e.g. bug deflectors, rollbars/light bars, running boards, ski racks).
- Avoid driving with the wheels out of alignment.

DRIVING THROUGH WATER

WARNING

Do not drive through flowing or deep water as you may lose control of your vehicle.

Note: *Driving through standing water can cause vehicle damage.*

Note: *Engine damage can occur if water enters the air filter.*

Before driving through standing water, check the depth. Never drive through water that is higher than the bottom of the front rocker area of your vehicle.

Information Provided by: DEALER E-PROCESS

E176360

When driving through standing water, drive very slowly and do not stop your vehicle. Your brake performance and traction may be limited. After driving through water and as soon as it is safe to do so:

- Lightly press the brake pedal to dry the brakes and to check that they work.
- Check that the horn works.
- Check that the exterior lights work.
- Turn the steering wheel to check that the steering power assist works.

FLOOR MATS

WARNINGS

Always use floor mats that are designed to fit the foot well of your vehicle. Only use floor mats that leave the pedal area unobstructed. Only use floor mats that are firmly secured to retention posts so that they cannot slip out of position and interfere with the pedals or impair safe operation of your vehicle in other ways.

Pedals that cannot move freely can cause loss of vehicle control and increase the risk of serious personal injury.

WARNINGS

Always make sure that the floor mats are properly attached to the retention posts in the carpet that are supplied with your vehicle. Floor mats must be properly secured to both retention posts to make sure mats do not shift out of position.

Never place floor mats or any other covering in the vehicle foot well that cannot be properly secured to prevent them from moving and interfering with the pedals or the ability to control the vehicle.

Never place floor mats or any other covering on top of already installed floor mats. Floor mats should always rest on top of vehicle carpeting surface and not another floor mat or other covering. Additional floor mats or any other covering will reduce the pedal clearance and potentially interfere with pedal operation.

Check attachment of floor mats on a regular basis. Always properly reinstall and secure floor mats that have been removed for cleaning or replacement.

Always make sure that objects cannot fall into the driver foot well while the vehicle is moving. Objects that are loose can become trapped under the pedals causing a loss of vehicle control.

Failure to properly follow floor mat installation or attachment instructions can potentially cause interference with pedal operation causing a loss of vehicle control.

Information Provided by:
DEALER E-PROCESS

To install floor mats, position the floor mat so that the eyelet is over the retention post and press down to lock in.

To remove the floor mat, reverse the installation procedure.

Information Provided by:
DEALER E-PROCESS

ROADSIDE ASSISTANCE

Vehicles Sold in the United States: Getting Roadside Assistance

To fully assist you should you have a vehicle concern, Ford Motor Company offers a complimentary roadside assistance program. This program is separate from the New Vehicle Limited Warranty. The service is available:

- 24 hours a day, seven days a week.
- For the coverage period listed on the Roadside Assistance Card included in your Owner's Manual portfolio.

Roadside Assistance covers:

- A flat tire change with a good spare, if provided with the vehicle (except vehicles supplied with a tire inflation kit).
- Battery jump start.
- Lock-out assistance (key replacement cost is the customer's responsibility).
- Fuel delivery — independent service contractors, if not prohibited by state, local or municipal law, shall deliver up to 2 gal (7.6 L) of gasoline or 5 gal (18.9 L) of diesel fuel to a disabled vehicle. Roadside Assistance limits fuel delivery service to two no-charge occurrences within a 12-month period.
- Winch out — available within 100 ft (30.5 m) of a paved or county maintained road, no recoveries.
- Towing — independent service contractors, if not prohibited by state, local or municipal law, shall tow Ford eligible vehicles to an authorized dealer within 35 mi (56 km) of the disablement location or to the nearest authorized dealer. If a member requests a tow to an authorized dealer that is more than 35 mi (56 km) from the disablement location, the member shall be responsible for any mileage costs in excess of 35 mi (56 km).

Roadside Assistance includes up to $200 for a towed trailer if the disabled eligible vehicle requires service at the nearest authorized dealer. If the towing vehicle is operational but the trailer is not, then the trailer does not qualify for any roadside services.

Vehicles Sold in the United States: Using Roadside Assistance

Complete the roadside assistance identification card and place it in your wallet for quick reference. This card is in the owner's information portfolio in the glove compartment.

United States Ford vehicle customers who require Roadside Assistance, call 1-800-241-3673.

If you need to arrange roadside assistance for yourself, Ford Motor Company reimburses a reasonable amount for towing to the nearest dealership within 35 mi (56 km). To obtain reimbursement information, United States Ford vehicle customers call 1-800-241-3673. Customers need to submit their original receipts.

Vehicles Sold in Canada: Getting Roadside Assistance

Canadian customers who require roadside assistance, call 1-800-665-2006.

Vehicles Sold in Canada: Using Roadside Assistance

For your convenience, you may complete the roadside assistance identification card found in the centerfold of your warranty guide and retain for future reference.

Information Provided by: DEALER E-PROCESS

Canadian roadside coverage and benefits may differ from the U.S. coverage. If you require more information, please refer to the coverage section of your warranty guide, call us in Canada at 1-800-665-2006, or visit our website at www.ford.ca.

Sykes Assistance Services Corporation administers the Roadside Assistance program. You must receive covered services in Canada or the continental United States. Coverage extends to vehicles that use public, non-seasonal, annually traveled roadways. Roadside Assistance coverage does not extend to vehicles involved in cross-country driving, logging, autocross and any other form of off-road use. Well maintained roads and surfaces help ensure safe travel for the supplier, and allow their representatives to perform service as per the standard operating procedures.

In Remote Locations

If our supplier cannot take your vehicle by road to the nearest authorized dealership, transportation by rail or water may be necessary. The program covers a tow to the dock or rail terminal and also to the dealership at the end of the trip.

For rail or water transportation, however, contact your authorized dealer to confirm if you are eligible for additional coverage before you authorize or pay for the service.

Call Ford Roadside Assistance at 1-800-665-2006 for additional information.

HAZARD WARNING FLASHERS

Note: *If used when the vehicle is not running, the battery will lose charge. There may be insufficient power to restart your vehicle.*

The hazard warning button is located on the instrument panel. Use it when your vehicle is creating a safety hazard for other motorists.

- Press the button to turn on the hazard warning function, and the front and rear direction indicators will flash.
- Press the button again to turn them off.

FUEL SHUTOFF

WARNING

Failure to inspect and, if necessary, repair fuel leaks after a collision may increase the risk of fire and serious injury. Ford Motor Company recommends that the fuel system be inspected by an authorized dealer after any collision.

In the event of a moderate to severe collision, this vehicle includes a fuel pump shutoff feature that stops the flow of fuel to the engine. Not every impact will cause a shutoff.

Should your vehicle shut off after a collision, you may restart your vehicle. For vehicles equipped with a key system:

1. Switch off the ignition.
2. Switch on the ignition.
3. Repeat Steps 1 and 2 to re-enable the fuel pump.

For vehicles equipped with a push button start system:

1. Press the **START/STOP** button to switch off the ignition.
2. Press the brake pedal and press the **START/STOP** button to switch on the ignition.

Information Provided by: DEALER E-PROCESS

3. Remove your foot from the brake pedal and press the **START/STOP** button to switch off the ignition.
4. You can either attempt to start the engine by pressing the brake pedal and the **START/STOP** button, or switch on the ignition only by pressing the **START/STOP** button without pressing the brake pedal. Both ways re-enable the fuel system.

Note: *When you try to restart your vehicle after a fuel shutoff, the vehicle makes sure that various systems are safe to restart. Once your vehicle determines that the systems are safe, then the vehicle will allow you to restart.*

Note: *In the event that your vehicle does not restart after your third attempt, contact an authorized dealer.*

JUMP STARTING THE VEHICLE

WARNINGS

Batteries normally produce explosive gases which can cause personal injury. Therefore, do not allow flames, sparks or lighted substances to come near the battery. When working near the battery, always shield your face and protect your eyes. Always provide correct ventilation.

Keep batteries out of reach of children. Batteries contain sulfuric acid. Avoid contact with skin, eyes or clothing. Shield your eyes when working near the battery to protect against possible splashing of acid solution. In case of acid contact with skin or eyes, flush immediately with water for a minimum of 15 minutes and get prompt medical attention. If acid is swallowed, call a physician immediately.

Use only adequately sized cables with insulated clamps.

Preparing Your Vehicle

Do not attempt to push-start your automatic transmission vehicle.

Note: *Attempting to push-start a vehicle with an automatic transmission may cause transmission damage.*

Note: *Use only a 12-volt supply to start your vehicle.*

Note: *Do not disconnect the battery of the disabled vehicle as this could damage the vehicle electrical system.*

Park the booster vehicle close to the hood of the disabled vehicle, making sure the two vehicles do not touch.

Connecting the Jumper Cables

WARNINGS

Do not attach the cables to fuel lines, engine rocker covers, the intake manifold or electrical components as grounding points. Stay clear of moving parts. To avoid reverse polarity connections, make sure that you correctly identify the positive (+) and negative (-) terminals on both the disabled and booster vehicles before connecting the cables.

Do not attach the end of the positive cable to the studs or L-shaped eyelet located above the positive (+) terminal of your vehicle's battery. High current may flow through and cause damage to the fuses.

Do not connect the end of the second cable to the negative (-) terminal of the battery to be jumped. A spark may cause an explosion of the gases that surround the battery.

Note: *In the illustration, the bottom vehicle represents the booster vehicle.*

Information Provided by: DEALER E-PROCESS

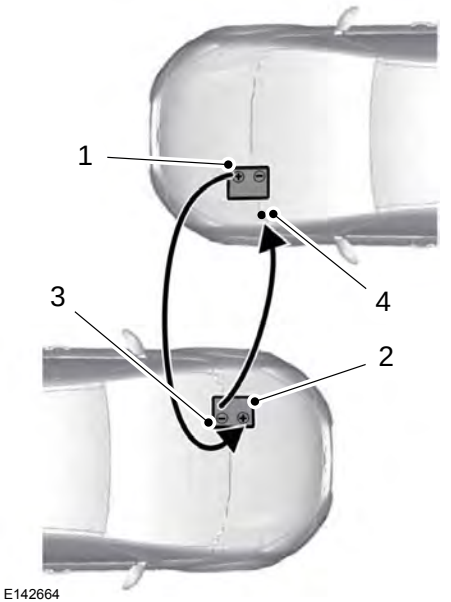

E142664

1. Connect the positive (+) jumper cable to the positive (+) terminal of the discharged battery.
2. Connect the other end of the positive (+) cable to the positive (+) terminal of the booster vehicle battery.
3. Connect the negative (-) cable to the negative (-) terminal of the booster vehicle battery.
4. Make the final connection of the negative (-) cable to an exposed metal part of the stalled vehicle's engine, away from the battery and the fuel injection system, or connect the negative (-) cable to a ground connection point if available.

Jump Starting

1. Start the engine of the booster vehicle and rev the engine moderately, or press the accelerator gently to keep your engine speed between 2000 and 3000 RPM, as shown in your tachometer.
2. Start the engine of the disabled vehicle.
3. Once the disabled vehicle has been started, run both vehicle engines for an additional three minutes before disconnecting the jumper cables.

Removing the Jumper Cables

Remove the jumper cables in the reverse order that they were connected.

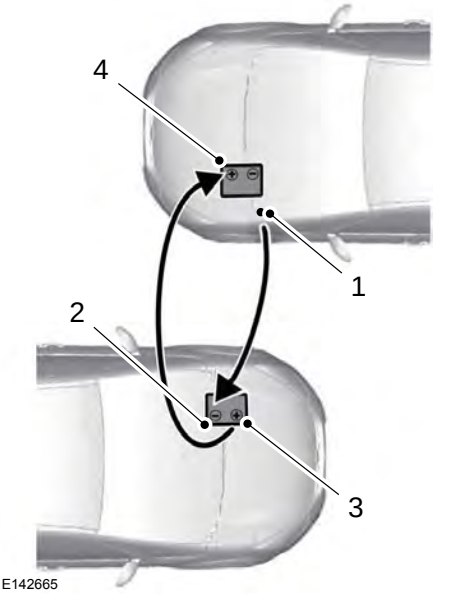

E142665

1. Remove the negative (-) jumper cable from the disabled vehicle.

Information Provided by:
DEALER E-PROCESS

2. Remove the jumper cable on the negative (-) terminal of the booster vehicle battery.
3. Remove the jumper cable from the positive (+) terminal of the booster vehicle battery.
4. Remove the jumper cable from the positive (+) terminal of the disabled vehicle battery.
5. Allow the engine to idle for at least one minute.

Information Provided by:
DEALER E-PROCESS

GETTING THE SERVICES YOU NEED

Warranty repairs to your vehicle must be performed by an authorized dealer. While any authorized dealer handling your vehicle line will provide warranty service, we recommend you return to your selling authorized dealer who wants to ensure your continued satisfaction.

Please note that certain warranty repairs require special training and equipment, so not all authorized dealers are authorized to perform all warranty repairs. This means that, depending on the warranty repair needed, you may have to take your vehicle to another authorized dealer.

A reasonable time must be allowed to perform a repair after taking your vehicle to the authorized dealer. Repairs will be made using Ford or Motorcraft® parts, or remanufactured or other parts that are authorized by Ford.

Away From Home

If you are away from home when your vehicle needs service, contact the Ford Customer Relationship Center or use the online resources listed below to find the nearest authorized dealer.

In the United States:

Mailing address

Ford Motor Company
Customer Relationship Center
P.O. Box 6248
Dearborn, MI 48121

Telephone

1-800-392-3673 (FORD)
(TDD for the hearing impaired:
1-800-232-5952)

Online

Additional information and resources are available online at www.fordowner.com

These are some of the items that can be found online:

- U.S. dealer locator by Dealer Name, City/State or Zip Code.
- Owner Manuals.
- Maintenance Schedules.
- Recalls.
- Ford Extended Service Plans.
- Ford Genuine Accessories.
- Service specials and promotions.

In Canada:

Mailing address

Customer Relationship Centre
Ford Motor Company of Canada, Limited
P.O. Box 2000
Oakville, Ontario L6K 0C8

Telephone

1-800-565-3673 (FORD)

Online

www.ford.ca

Twitter

@FordServiceCA (English Canada)
@FordServiceQC (Quebec)

Additional Assistance

If you have questions or concerns, or are unsatisfied with the service you are receiving, follow these steps:

1. Contact your Sales Representative or Service Advisor at your selling/servicing authorized dealer.
2. If your inquiry or concern remains unresolved, contact the Sales Manager, Service Manager or Customer Relations Manager.
3. If you require assistance or clarification on Ford Motor Company policies, please contact the Ford Customer Relationship Center.

Information Provided by:
DEALER E-PROCESS

In order to help us serve you better, please have the following information available when contacting a Customer Relationship Center:

- Vehicle Identification Number.
- Your telephone number (home and business).
- The name of the authorized dealer and city where located.
- The vehicle's current odometer reading.

In some states, you must directly notify Ford in writing before pursuing remedies under your state's warranty laws. Ford is also allowed a final repair attempt in some states.

In the United States, a warranty dispute must be submitted to the BBB AUTO LINE before taking action under the Magnuson-Moss Warranty Act, or to the extent allowed by state law, before pursuing replacement or repurchase remedies provided by certain state laws. This dispute handling procedure is not required prior to enforcing state created rights or other rights which are independent of the Magnuson-Moss Warranty Act or state replacement or repurchase laws.

IN CALIFORNIA (U.S. ONLY)

California Civil Code Section 1793.2(d) requires that, if a manufacturer or its representative is unable to repair a motor vehicle to conform to the vehicle's applicable express warranty after a reasonable number of attempts, the manufacturer shall be required to either replace the vehicle with one substantially identical or repurchase the vehicle and reimburse the buyer in an amount equal to the actual price paid or payable by the consumer (less a reasonable allowance for consumer use). The consumer has the right to choose whether to receive a refund or replacement vehicle.

California Civil Code Section 1793.22(b) presumes that the manufacturer has had a reasonable number of attempts to conform the vehicle to its applicable express warranties if, within the first 18 months of ownership of a new vehicle or the first 18000 miles (29 000 km), whichever occurs first:

1. Two or more repair attempts are made on the same non-conformity likely to cause death or serious bodily injury OR
2. Four or more repair attempts are made on the same nonconformity (a defect or condition that substantially impairs the use, value or safety of the vehicle) OR
3. The vehicle is out of service for repair of nonconformities for a total of more than 30 calendar days (not necessarily all at one time).

In the case of 1 or 2 above, the consumer must also notify the manufacturer of the need for the repair of the nonconformity at the following address:

Ford Motor Company
16800 Executive Plaza Drive
Mail Drop 3NE-B
Dearborn, MI 48126

You are required to submit your warranty dispute to BBB AUTO LINE before asserting in court any rights or remedies conferred by California Civil Code Section 1793.22(b). You are also required to use BBB AUTO LINE before exercising rights or seeking remedies created by the Federal Magnuson-Moss Warranty Act, 15 U.S.C. sec. 2301 et seq. If you choose to seek redress by pursuing rights and remedies not created by California Civil Code Section 1793.22(b) or the Magnuson-Moss Warranty Act, resort to BBB AUTO LINE is not required by those statutes.

Information Provided by:
DEALER E-PROCESS

THE BETTER BUSINESS BUREAU (BBB) AUTO LINE PROGRAM (U.S. ONLY)

Your satisfaction is important to Ford Motor Company and to your dealer. If a warranty concern has not been resolved using the three-step procedure outlined earlier in this chapter in the Getting the Services you need section, you may be eligible to participate in the BBB AUTO LINE program.

The BBB AUTO LINE program consists of two parts – mediation and arbitration. During mediation, a representative of the BBB will contact both you and Ford Motor Company to explore options for settlement of the claim. If an agreement is not reached during mediation or you do not want to participate in mediation, and if your claim is eligible, you may participate in the arbitration process. An arbitration hearing will be scheduled so that you can present your case in an informal setting before an impartial person. The arbitrator will consider the testimony provided and make a decision after the hearing.

Disputes submitted to the BBB AUTO LINE program are usually decided within forty days after you file your claim with the BBB. You are not bound by the decision, and may reject the decision and proceed to court where all findings of the BBB Auto Line dispute, and decision, are admissible in the court action. Should you choose to accept the BBB AUTO LINE decision, Ford is then bound by the decision, and must comply with the decision within 30 days of receipt of your acceptance letter.

BBB AUTO LINE Application: Using the information provided below, please call or write to request a program application. You will be asked for your name and address, general information about your new vehicle, information about your warranty concerns, and any steps you have already taken to try to resolve them. A Customer Claim Form will be mailed that will need to be completed, signed and returned to the BBB along with proof of ownership. Upon receipt, the BBB will review the claim for eligibility under the Program Summary Guidelines.

You can get more information by calling BBB AUTO LINE at 1-800-955-5100, or writing to:

BBB AUTO LINE
3033 Wilson Boulevard, Suite 600
Arlington, Virginia 22201

BBB AUTO LINE applications can also be requested by calling the Ford Motor Company Customer Relationship Center at 1-800-392-3673.

Note: *Ford Motor Company reserves the right to change eligibility limitations, modify procedures, or to discontinue this process at any time without notice and without obligation.*

UTILIZING THE MEDIATION/ARBITRATION PROGRAM (CANADA ONLY)

For vehicles delivered to authorized Canadian dealers. In those cases where you continue to feel that the efforts by Ford of Canada and the authorized dealer to resolve a factory-related vehicle service concern have been unsatisfactory, Ford of Canada participates in an impartial third party mediation/arbitration program administered by the Canadian Motor Vehicle Arbitration Plan (CAMVAP).

The CAMVAP program is a straight forward and relatively speedy alternative to resolve a disagreement when all other efforts to produce a settlement have failed. This procedure is without cost to you and is designed to eliminate the need for lengthy and expensive legal proceedings.

Information Provided by:
DEALER E-PROCESS

In the CAMVAP program, impartial third-party arbitrators conduct hearings at mutually convenient times and places in an informal environment. These impartial arbitrators review the positions of the parties, make decisions and, when appropriate, render awards to resolve disputes. CAMVAP decisions are fast, fair, and final as the arbitrator's award is binding on both you and Ford of Canada.

CAMVAP services are available in all Canadian territories and provinces. For more information, without charge or obligation, call your CAMVAP Provincial Administrator directly at 1-800-207-0685 or visit www.camvap.ca.

GETTING ASSISTANCE OUTSIDE THE U.S. AND CANADA

Before exporting your vehicle to a foreign country, contact the appropriate foreign embassy or consulate. These officials can inform you of local vehicle registration regulations and where to find unleaded fuel.

If you cannot find unleaded fuel or can only get fuel with an anti-knock index lower than is recommended for your vehicle, contact our Customer Relationship Center.

The use of leaded fuel in your vehicle without proper conversion may damage the effectiveness of your emission control system and may cause engine knocking or serious engine damage. Ford Motor Company or Ford of Canada is not responsible for any damage caused by use of improper fuel. Using leaded fuel may also result in difficulty importing your vehicle back into the United States.

If your vehicle must be serviced while you are traveling or living in Asia-Pacific Region, Sub-Saharan Africa, U.S. Virgin Islands, Central America, the Caribbean, and Israel, contact the nearest authorized dealer. If the authorized dealer cannot help you, contact:

FORD MOTOR COMPANY
Customer Relationship Center
1555 Fairlane Drive
Fairlane Business Park #3
Allen Park, Michigan 48101
U.S.A.
Telephone: (313) 594-4857
Fax: (313) 390-0804
Email: expcac@ford.com

For customers in Guam, the Commonwealth of the Northern Mariana Islands (CNMI), America Samoa, and the U.S. Virgin Islands, please feel free to call our Toll-Free Number: (800) 841-FORD (3673).

If your vehicle must be serviced while you are traveling or living in Puerto Rico, contact the nearest authorized dealer. If the authorized dealer cannot help you, contact:

FORD MOTOR COMPANY
Customer Relationship Center
1555 Fairlane Drive
Fairlane Business Park #3
Allen Park, Michigan 48101
U.S.A.
Telephone: (800) 841-FORD (3673)
FAX: (313) 390-0804
Email: prcac@ford.com
www.ford.com.pr

If your vehicle must be serviced while you are traveling or living in the Middle East, contact the nearest authorized dealer. If the authorized dealer cannot help you, contact:

Information Provided by:
DEALER E-PROCESS

FORD MOTOR COMPANY
Customer Relationship Center
1555 Fairlane Drive
Fairlane Business Park #3
Allen Park, Michigan 48101
U.S.A.

Ford: 80004443673
Lincoln: 80004441067
If calling from the UAE: 80004441066
If calling from the Kingdom of Saudi Arabia: 8008443673
If calling from Kuwait: 22280384

FAX: +971 4 3327266
Email: menacac@ford.com
www.me.ford.com

If you buy your vehicle in North America and then relocate to any of the above locations, register your vehicle identification number (VIN) and new address with Ford Motor Company Export Operations & Global Growth Initiatives by emailing **expcac@ford.com**.

If you are in another foreign country, contact the nearest authorized dealer. In the event your inquiry is unresolved, communicate your concern with the dealership's Sales Manager, Service Manager or Customer Relations Manager. If you require additional assistance or clarification, please contact the respective Customer Relationship Center as previously listed.

Customers in the U.S. should call 1-800-392-3673.

ORDERING ADDITIONAL OWNER'S LITERATURE

To order the publications in this portfolio, contact Helm, Incorporated at:

HELM, INCORPORATED
47911 Halyard Drive
Plymouth, Michigan 48170
Attention: Customer Service

Or to order a free publication catalog, call toll free: 1-800-782-4356

Monday-Friday 8:00 a.m. - 6:00 p.m. EST

Helm, Incorporated can also be reached by their website:

www.helminc.com

(Items in this catalog may be purchased by credit card, check or money order.)

Obtaining a French Owner's Manual

French Owner's Manual can be obtained from your authorized dealer or by contacting Helm, Incorporated using the contact information listed previously in this section.

REPORTING SAFETY DEFECTS (U.S. ONLY)

E142557

If you believe that your vehicle has a defect which could cause a crash or could cause injury or death, you should immediately inform the National Highway Traffic Safety Administration (NHTSA) in addition to notifying Ford Motor Company.

Information Provided by: DEALER E-PROCESS

If NHTSA receives similar complaints, it may open an investigation, and if it finds that a safety defect exists in a group of vehicles, it may order a recall and remedy campaign. However, NHTSA cannot become involved in individual problems between you, your dealer, or Ford Motor Company.

To contact NHTSA, you may call the Vehicle Safety Hotline toll-free at 1-888-327-4236 (TTY: 1-800-424-9153); go to http://www.safercar.gov; or write to:

Administrator

1200 New Jersey Avenue, Southeast

Washington, D.C. 20590

You can also obtain other information about motor vehicle safety from http://www.safercar.gov.

REPORTING SAFETY DEFECTS (CANADA ONLY)

If you believe that your vehicle has a defect which could cause a crash or could cause injury or death, you should immediately inform Transport Canada.

Transport Canada Contact Information	
Website	http://www.tc.gc.ca/eng/roadsafety/menu.htm
Phone	1–800–333–0510

Information Provided by: DEALER E-PROCESS

FUSE SPECIFICATION CHART

Engine Compartment Fuse Box

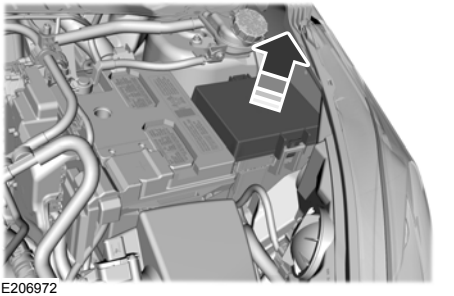

E206972

4-door and 5-door

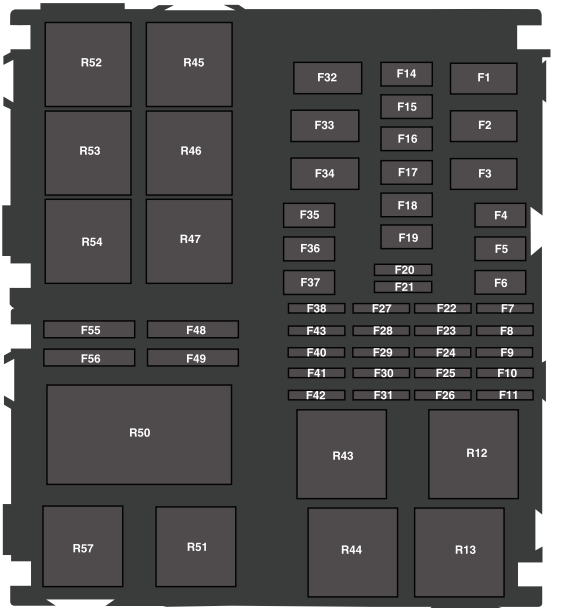

E206971

Fuse	Fuse rating	Circuits protected
F1	40A	Anti-lock brake system module.
	60A	Stability assist.

Information Provided by:
DEALER E-PROCESS

Fuse	Fuse rating	Circuits protected
		Anti-lock brake system module.
F2	40A	Engine cooling fan relay.
	60A	High speed engine cooling fan relay.[5]
F3	60A	Passenger compartment fuse box.
F4	20A	Body control module. Door locks.
F5	-	Not used.
F6	40A	Blower motor relay. Blower motor.
F7	-	Not used.
F8	-	Not used.
F9	7.5A	Foglamp relay coil. High beam relay coil.
F10	15A	Body control module. Right-hand side exterior lighting.
F11	15A	Body control module. Left-hand side exterior lighting.
F14	-	Not used.
F15	-	Not used.
F16	-	Not used.
F17	-	Not used.
F18	-	Not used.
F19	30A	Fuel injectors.
F20	-	Not used.
F21	7.5A	Mass air flow sensor.[2]
	10A	Fuel injector driver.
F22	15A	Powertrain control module.
F23	15A	Camshaft sensor. Heated exhaust gas oxygen sensors.

Information Provided by:
DEALER E-PROCESS

Fuse	Fuse rating	Circuits protected
F24	15A	Ignition coil.[3]
	20A	Ignition coil.[2]
F25	10A	Variable cam timing 1. Variable cam timing 2. Canister purge valve. R5, R6 and R7 relay coil.
F26	7.5A	ECSS system.[4]
	15A	Active grill shutter.[1] Water pump.[1] Air conditioning.[1]
F27	-	Not used.
F28	-	Not used.
F29	-	Not used.
F30	-	Not used.
F31	-	Not used.
F32	60A	Passenger compartment fuse box.
F33	60A	Power windows.
F34	40A	Transmission control module.[6]
	60A	High speed engine cooling fan.[1]
F35	40A	Stability assist/anti-lock brake system valve..
F36	30A	Starter inhibit relay. Starter motor solenoid.
F37	30A	Heated rear window. Heated mirrors.
F38	20A	Body control module. Battery saver.
F39	15A	Body control module. Direction indicators.
F40	-	Not used.

Information Provided by:
DEALER E-PROCESS

Fuse	Fuse rating	Circuits protected
F41	10A	Air condition clutch solenoid.
F42	7.5A	Powertrain control module. Transmission control module. Canister vent valve.
F48	10A	Left-hand fog lamp.
F49	10A	Right-hand fog lamp.
F55	10A	Left-hand high beam.
F56	10A	Right-hand high beam.

[1] 1.0L EcoBoost.

[2] 1.0L and 1.6L EcoBoost.

[3] 1.6L Sigma.

[4] 1.6L Flex-fuel.

[5] 1.6L Ecoboost.

[6] 6-Speed PowerShift Transmission.

Relay	Circuits switched
R12	Powertrain control module relay.
R13	High beam relay.
R43	Not used.
R44	Foglamp relay.
R45	Air conditioning clutch relay.
R46	Not used.
R47	Fuel pump relay.
R50	High speed cooling fan.[1]
R51	Starter inhibit relay.
R52	Blower motor relay.
R53	Not used.

Information Provided by:
DEALER E-PROCESS

Relay	Circuits switched
R54	Reversing lamp.
R57	Engine cooling fan relay.

[1] 1.0L and 1.6L EcoBoost.

Passenger Compartment Fuse Box

This fuse box is located behind the glove box. Open the glove box and empty the contents. Press the sides inwards and swivel the glove box downward.

Information Provided by:
DEALER E-PROCESS

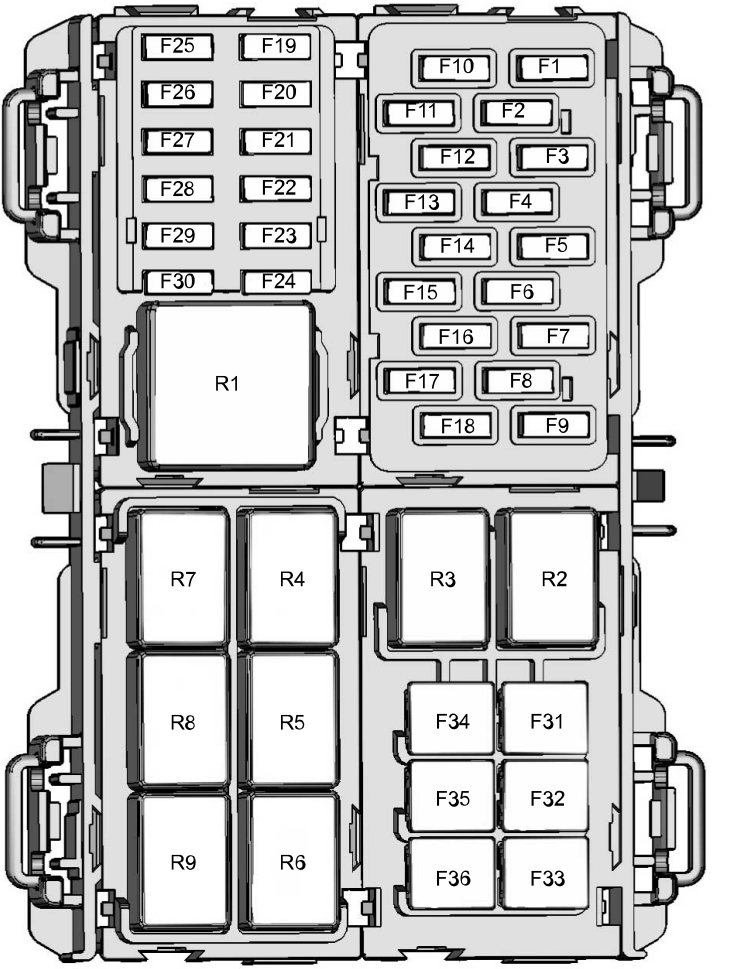

E156756

Information Provided by:
DEALER E-PROCESS

Fuse	Fuse rating	Circuits protected
F1	15A	Ignition switch.
F2	7.5A	Auto-dimming interior mirror. Autowipers. Heater relay control.
F3	7.5A	Instrument cluster.
F4	7.5A	Passenger airbag deactivation indicator. Passenger sensing system.
F5	15A	On-board diagnostics connector.
F6	10A	Reversing lamps.
F7	7.5A	Instrument panel. Information and entertainment display.
F8	7.5A	Moonroof.
F9	20A	Remote keyless entry. Remote keyless starting.
F10	15A	Audio unit. SYNC module.
F11	20A	Windshield wipers.
F12	7.5A	Climate control.
F13	15A	Rear window wiper.
F14	20A	Remote keyless entry. Remote keyless starting.
F15	15A	Windshield wipers.
F16	5A	Exterior mirrors. Power windows.
F17	15A	Heated seats.
F18	10A	Brake lamp.
F19	7.5A	Instrument cluster.
F20	10A	Airbags
F21	7.5A	Electronic power assist steering. Instrument cluster.

Information Provided by:
DEALER E-PROCESS

Fuse	Fuse rating	Circuits protected
		Ignition. Windshield wipers. Passive anti-theft system.
F22	7.5A	Transmission control unit. Powertrain control module. Anti-lock brake system. Stability assist.
F23	7.5A	Transmission control unit.
F24	7.5A	Audio unit.
F25	7.5A	Exterior mirrors.
F26	7.5A	Central locking system.
F27	-	Not used.
F28	-	Not used.
F29	-	Not used.
F30	-	Not used.
F31	30A	Power windows.
F32	20A	Battery back-up sounder.
F33	20A	Auxiliary power points.
F34	30A	Power windows.
F35	20A	Moonroof.
F36	-	Not used.

Relay	Circuits switched
R1	Ignition relay.
R2	Not used.
R3	Not used.
R4	Driver heated seat.
R5	Passenger heated seat.
R6	Remote keyless starting.

Information Provided by:
DEALER E-PROCESS

Relay	Circuits switched
R7	Remote keyless starting.
R8	Battery back-up sounder.
R9	Accessory delay.

CHANGING A FUSE

Fuses

WARNING

Always replace a fuse with one that has the specified amperage rating. Using a fuse with a higher amperage rating can cause severe wire damage and could start a fire.

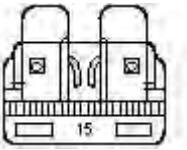

E142430

If electrical components in the vehicle are not working, a fuse may have blown. Blown fuses are identified by a broken wire within the fuse. Check the appropriate fuses before replacing any electrical components.

Standard Fuse Amperage Rating and Color

	Color			
Fuse rating	**Micro fuses**	**Dual micro fuses**	**M-type fuses**	**J-type fuses**
5A	Tan	Tan	-	-
7.5A	Brown	Brown	-	-
10A	Red	Red	-	-
15A	Blue	Blue	Grey	-
20A	Yellow	-	Light Blue	Blue
25A	White	-	White	White
30A	Green	-	Pink	Pink
40A	-	-	Green	Green
50A	-	-	-	Red
60A	-	-	-	Yellow

Information Provided by:
DEALER E-PROCESS

GENERAL INFORMATION

Have your vehicle serviced regularly to help maintain its roadworthiness and resale value. There is a large network of authorized dealers that are there to help you with their professional servicing expertise. We believe that their specially trained technicians are best qualified to service your vehicle properly and expertly. They are supported by a wide range of highly specialized tools developed specifically for servicing your vehicle.

If your vehicle requires professional service, an authorized dealer can provide the necessary parts and service. Check your warranty information to find out which parts and services are covered.

Use only recommended fuels, lubricants, fluids and service parts conforming to specifications. Motorcraft® parts are designed and built to provide the best performance in your vehicle.

Precautions

- Do not work on a hot engine.
- Make sure that nothing gets caught in moving parts.
- Do not work on a vehicle with the engine running in an enclosed space, unless you are sure you have enough ventilation.
- Keep all open flames and other burning material (such as cigarettes) away from the battery and all fuel related parts.

Working with the Engine Off

1. Set the parking brake and shift to park (P).
2. Switch off the engine.
3. Block the wheels.

Working with the Engine On

WARNING

To reduce the risk of vehicle damage and/or personal burn injuries, do not start your engine with the air cleaner removed and do not remove it while the engine is running.

1. Set the parking brake and shift to park (P).
2. Block the wheels.

OPENING AND CLOSING THE HOOD

Opening the Hood

E102165

1. Pull the hood release lever.
2. Slightly lift the hood.

Information Provided by: DEALER E-PROCESS

E163236

3. Move the catch to the left to release the hood.

E87786

4. Open the hood and support it with the hood strut.

Closing the Hood

1. Remove the hood strut from the catch and secure it correctly in the clip.
2. Lower the hood and allow it to drop under its own weight for the last 8-12 in (20-30 cm).

Note: *Make sure that the hood is correctly closed.*

Information Provided by:
DEALER E-PROCESS

UNDER HOOD OVERVIEW - 1.0L ECOBOOST™

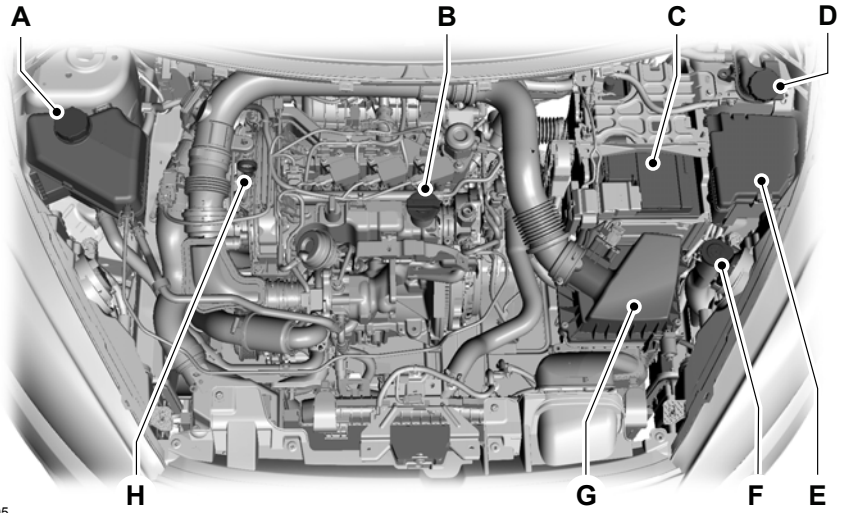

E163005

A Engine coolant reservoir*: See **Engine Coolant Check** (page 184).

B Engine oil filler cap*: See **Engine Oil Check** (page 182).

C Battery: See **Changing the 12V Battery** (page 186).

D Brake and clutch fluid reservoir*: See **Brake Fluid Check** (page 186).

E Engine compartment fuse box:

F Windshield and rear window washer fluid reservoir: See **Washer Fluid Check** (page 186).

G Air cleaner: See **Changing the Engine Air Filter** (page 201).

H Engine oil dipstick*: See **Engine Oil Check** (page 182).

* The filler caps and the engine oil dipstick are colored for easy identification.

Information Provided by:
DEALER E-PROCESS

UNDER HOOD OVERVIEW - 1.6L DURATEC-16V TI-VCT (SIGMA)

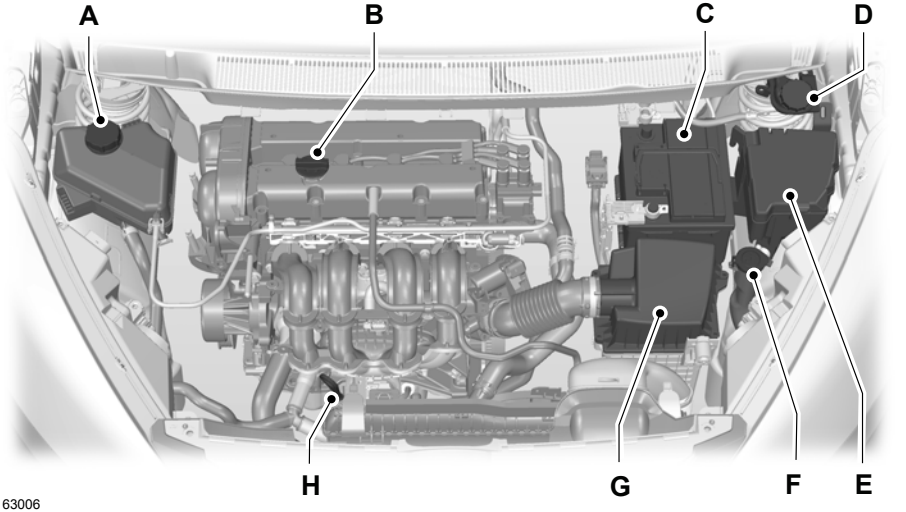

E163006

A Engine coolant reservoir*: See **Engine Coolant Check** (page 184).

B Engine oil filler cap*: See **Engine Oil Check** (page 182).

C Battery: See **Changing the 12V Battery** (page 186).

D Brake and clutch fluid reservoir : See **Brake Fluid Check** (page 186).

E Engine compartment fuse box:

F Windshield and rear window washer fluid reservoir: See **Washer Fluid Check** (page 186).

G Air cleaner: See **Changing the Engine Air Filter** (page 201).

H Engine oil dipstick*: See **Engine Oil Check** (page 182).

* The filler caps and the engine oil dipstick are colored for easy identification.

Information Provided by:
DEALER E-PROCESS

UNDER HOOD OVERVIEW - 1.6L ECOBOOST™

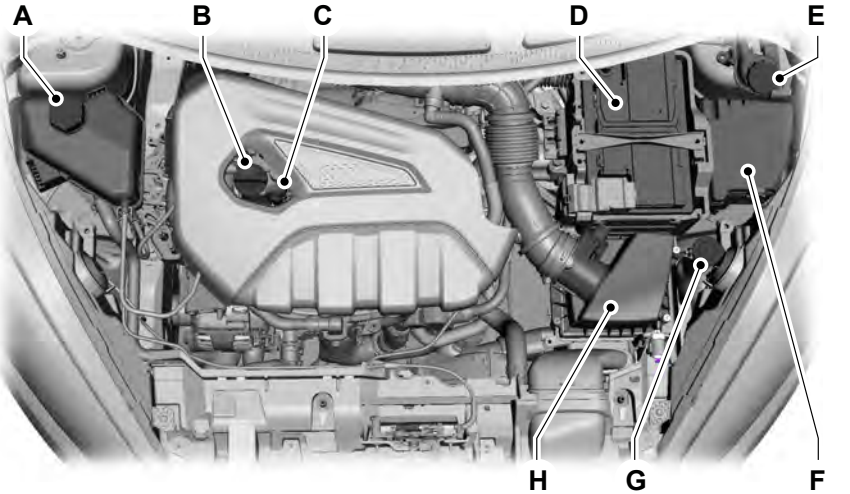

E163007

A Engine coolant reservoir*: See **Engine Coolant Check** (page 184).

B Engine oil filler cap*: See **Engine Oil Check** (page 182).

C Engine oil dipstick*: See **Engine Oil Check** (page 182).

D Battery: See **Changing the 12V Battery** (page 186).

E Brake and clutch fluid reservoir*: See **Brake Fluid Check** (page 186).

F Engine compartment fuse box:

G Windshield and rear window washer fluid reservoir: See **Washer Fluid Check** (page 186).

H Air cleaner: See **Changing the Engine Air Filter** (page 201).

* The filler caps and the engine oil dipstick are colored for easy identification.

Information Provided by:
DEALER E-PROCESS

ENGINE OIL DIPSTICK - 1.0L ECOBOOST™

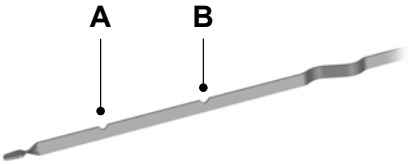

E141337

A Minimum

B Maximum

ENGINE OIL DIPSTICK - 1.6L DURATEC-16V TI-VCT (SIGMA)

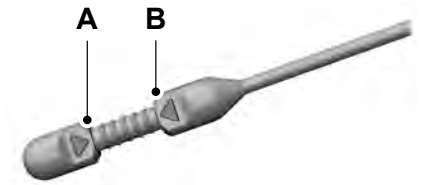

E188072

A Minimum.

B Maximum.

ENGINE OIL DIPSTICK - 1.6L ECOBOOST™

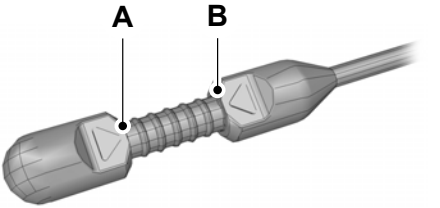

E134114

A Minimum

B Maximum

ENGINE OIL CHECK

1. Make sure that your vehicle is on level ground.
2. Check the oil level before starting the engine, or switch the engine off and wait 15 minutes for the oil to drain into the oil pan.
3. Remove the dipstick and wipe it with a clean, lint free cloth. Replace the dipstick and remove it again to check the oil level.

If the oil level is at the minimum mark, add oil immediately. See **Maintenance** (page 177).

Do not use supplemental engine oil additives because they are unnecessary and could lead to engine damage that may not be covered by your vehicle warranty.

Note: *Make sure that the oil level is between the minimum and the maximum marks.*

Information Provided by:
DEALER E-PROCESS

Note: *The oil consumption of new engines reaches its normal level after approximately 3,000 mi (5,000 km).*

Adding Engine Oil

E142732

Only use oils certified for gasoline engines by the American Petroleum Institute (API). An oil with this trademark symbol conforms to the current engine and emission system protection standards and fuel economy requirements of the International Lubricants Specification Advisory Council (ILSAC), comprised of U.S. and Japanese automobile manufacturers.

WARNINGS

Only add oil when the engine is cold. If the engine is hot, wait 10 minutes for the engine to cool down.

Do not remove the filler cap when the engine is running.

1. Remove the engine oil filler cap.
2. Add engine oil that meets Ford specifications. See **Maintenance** (page 177).
3. Wipe off any spilled oil.
4. Replace the engine oil filler cap. Turn it clockwise until you feel a strong resistance.

Note: *Do not add oil further than the maximum mark. Oil levels above the maximum mark may cause engine damage.*

Note: *Soak up any spillage with an absorbent cloth immediately.*

OIL CHANGE INDICATOR RESET

Resetting the Oil Life Monitoring System

Only reset the oil life monitoring system after changing the engine oil and oil filter.

1. Switch the ignition on. Do not start the engine. For vehicles with push-button start, press and hold the start button for two seconds without pressing the brake pedal. Do not start the engine.
2. Press the accelerator and brake pedals at the same time.
3. Keep the accelerator and brake pedals fully pressed.
4. After three seconds, a message confirming that the reset is in progress will be displayed.
5. After 25 seconds, a message confirming that the reset is complete will be displayed.
6. Release the accelerator and brake pedals.
7. The message confirming that the reset is complete will no longer be displayed.
8. Switch the ignition off. For vehicles with push-button start, press the start button to switch the ignition off.

Information Provided by: DEALER E-PROCESS

ENGINE COOLANT CHECK

Checking the Engine Coolant

When the engine is cold, check the concentration and level of the engine coolant at the intervals listed in the scheduled maintenance information. See **Scheduled Maintenance** (page 316).

Note: *Make sure that the level is between the MIN and MAX marks on the coolant reservoir.*

Note: *Coolant expands when it is hot. The level may extend beyond the MAX mark.*

Note: *If the level is at the MIN mark, below the MIN mark, or empty, add coolant immediately. See **Adding Engine Coolant** in this chapter.*

Maintain coolant concentration within 48% to 50%, which equates to a freeze point between -30ºF (-34ºC) and -34ºF (-37ºC).

Note: *For best results, coolant concentration should be tested with a refractometer, for example Robinair® Coolant and Battery Refractometer 75240. We do not recommend the use of hydrometers or coolant test strips for measuring coolant concentrations.*

Note: *Automotive fluids are not interchangeable. Do not use engine coolant, antifreeze or windshield washer fluid outside of its specified function and vehicle location.*

Adding Engine Coolant

WARNINGS

Do not add engine coolant when the engine is hot. Steam and scalding liquids released from a hot cooling system can burn you badly. Also, spilling coolant on hot engine parts can burn you.

WARNINGS

Do not put engine coolant in the windshield washer fluid reservoir. If sprayed on the windshield, engine coolant could make it difficult to see through the windshield.

Do not add coolant further than the MAX mark.

To reduce the risk of personal injury, make sure the engine is cool before unscrewing the coolant pressure relief cap. The cooling system is under pressure; steam and hot liquid can come out forcefully when the cap is loosened slightly.

Note: *Do not use stop leak pellets, cooling system sealants or additives as they can cause damage to the engine cooling or heating systems. The vehicle warranty does not cover this damage.*

Note: *During normal vehicle operation, the engine coolant may change color from orange to pink or light red. As long as the engine coolant is clear and uncontaminated, this color change does not indicate that the engine coolant has degraded, nor does it require that qualified personnel drain the engine coolant, flush the system or replace the engine coolant.*

Information Provided by: DEALER E-PROCESS

- Do not mix different colors or types of coolant in your vehicle. Make sure the correct coolant is used. Mixing of engine coolants may harm the engine's cooling system. The use of incorrect coolant may harm engine and cooling system components and may void the warranty. Use prediluted engine coolant meeting the Ford specification. See **Capacities and Specifications** (page 234).
- In case of emergency, you can add a large amount of water without engine coolant in order to reach a vehicle service location. In this instance, you must have the cooling system drained, chemically cleaned with Motorcraft Premium Cooling System Flush, and refilled with engine coolant as soon as possible. Water alone (without engine coolant) can cause engine damage, for example corrosion, overheating or freezing.
- Do not use alcohol, methanol, brine or any engine coolants mixed with alcohol or methanol antifreeze. Alcohol and other liquids can cause engine damage, for example overheating or freezing.
- Do not add extra inhibitors or additives to the coolant. These can be harmful and compromise the corrosion protection of the engine coolant.

Unscrew the cap slowly. Any pressure will escape as you unscrew the cap.

Add prediluted engine coolant meeting the Ford specification. See **Capacities and Specifications** (page 234).

Whenever you add coolant, check the coolant level in the coolant reservoir the next few times you drive the vehicle. If necessary, add enough prediluted engine coolant to bring the coolant level to the correct level.

Recycled Engine Coolant

We do not recommend the use of recycled engine coolant since a Ford-approved recycling process is not yet available.

Used engine coolant should be disposed of in an appropriate manner. Follow your community's regulations and standards for recycling and disposing of automotive fluids.

Severe Climates

If you drive in extremely cold climates:

- It may be necessary to have a Ford authorized dealer increase the coolant concentration above 50%.
- A coolant concentration of 60% will provide improved freeze point protection. Engine coolant concentrations above 60% will decrease the overheat protection characteristics of the engine coolant and may cause engine damage.

If you drive in extremely hot climates:

- It may be necessary to have a Ford authorized dealer decrease the coolant concentration to 40%.
- A coolant concentration of 40% provides improved overheat protection. Engine coolant concentrations below 40% will decrease the freeze and corrosion protection characteristics of the engine coolant and may cause engine damage.

Vehicles driven year-round in non-extreme climates should use prediluted engine coolant for optimum cooling system and engine protection.

Information Provided by: DEALER E-PROCESS

AUTOMATIC TRANSMISSION FLUID CHECK

Note: *Transmission fluid should be checked by an authorized dealer. If required, fluid should be added by an authorized dealer.*

The automatic transmission does not have a transmission fluid dipstick.

Have an authorized dealer check and change the transmission fluid at the correct service interval. See **Scheduled Maintenance** (page 316). Your transmission does not consume fluid. However, the fluid level should be checked if the transmission is not working properly, (i.e., if the transmission slips or shifts slowly) or if you notice some sign of fluid leakage.

Do not use supplemental transmission fluid additives, treatments or cleaning agents. The use of these materials may affect transmission operation and result in damage to internal transmission components.

BRAKE FLUID CHECK

Fluid levels between the MIN and MAX lines are within the normal operating range; there is no need to add fluid. If the fluid levels are outside of the normal operating range, the performance of the system could be compromised; seek service from your authorized dealer immediately.

POWER STEERING FLUID CHECK

Your vehicle is equipped with an electric power steering (EPS) system. There is no fluid reservoir to check or fill.

WASHER FLUID CHECK

Note: *The reservoir supplies the front and rear washer systems.*

When adding fluid, use a mixture of washer fluid and water to help prevent freezing in cold weather and improve the cleaning capability. We recommend that you use only high quality washer fluid.

For information on fluid dilution, refer to the product instructions.

FUEL FILTER

Your vehicle is equipped with a lifetime fuel filter that is integrated with the fuel tank. Regular maintenance or replacement is not needed.

CHANGING THE 12V BATTERY

WARNING

For vehicles with start-stop the battery requirement is different. You must replace the battery with one of exactly the same specification.

Note: *Where applicable you must reprogram the audio system using the keycode.*

The battery is located in the engine compartment. See **Maintenance** (page 177).

Information Provided by: DEALER E-PROCESS

CHECKING THE WIPER BLADES

E142463

Run the tip of your fingers over the edge of the blade to check for roughness.

Clean the wiper blades with washer fluid or water applied with a soft sponge or cloth.

CHANGING THE WIPER BLADES

Windshield Wiper Blades

Note: *Do not hold the wiper blade when lifting the wiper arm.*

Note: *Make sure that the wiper arm does not spring back against the glass when the wiper blade is not attached.*

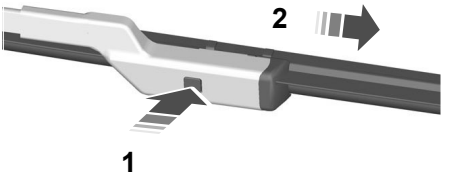

E72899

1. Lift the wiper arm and then press the wiper blade locking button.
2. Remove the wiper blade.
3. Install in the reverse order.

Note: *Make sure that the wiper blade locks into place.*

Rear Window Wiper Blade

Note: *Do not hold the wiper blade when lifting the wiper arm.*

Note: *Make sure that the wiper arm does not spring back against the glass when the wiper blade is not attached.*

1. Lift the wiper arm.

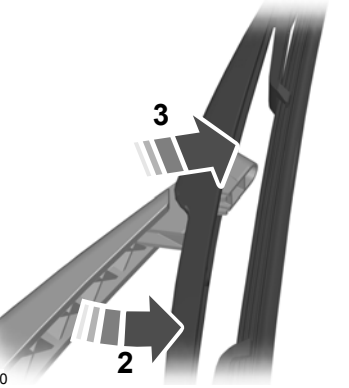

E130060

2. Slightly rotate the wiper blade.
3. Disengage the wiper blade from the wiper arm.
4. Remove the wiper blade.
5. Install in the reverse order.

Note: *Make sure that the wiper blade locks into place.*

ADJUSTING THE HEADLAMPS

Vertical Aim Adjustment

If your vehicle has been involved in an accident, have the alignment of your headlamps checked by an authorized dealer.

Information Provided by:
DEALER E-PROCESS

Headlamp Aiming Target

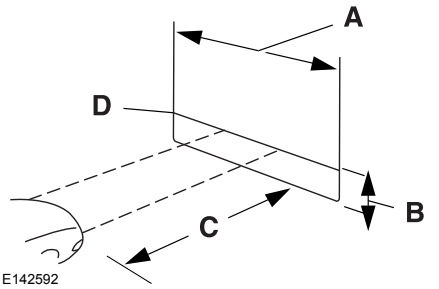

E142592

A	8 feet (2.4 meters)
B	Center height of lamp to ground
C	25 feet (7.6 meters)
D	Horizontal reference line

Vertical Aim Adjustment Procedure

1. Park your vehicle directly in front of a wall or screen on a level surface, approximately 25 feet (7.6 meters) away.
2. Measure the height of the headlamp bulb center from the ground and mark an 8 foot (2.4 meter) horizontal reference line on the vertical wall or screen at this height.

Note: *To see a clearer light pattern for adjusting, you may want to block the light from one headlamp while adjusting the other.*

3. Turn on the low beam headlamps to illuminate the wall or screen and open the hood.

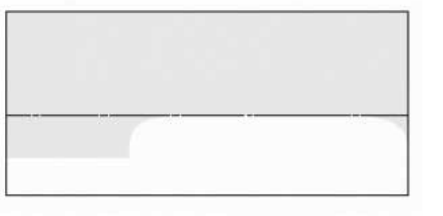

E142465

4. On the wall or screen you will observe a flat zone of high intensity light located at the top of the right hand portion of the beam pattern. If the top edge of the high intensity light zone is not at the horizontal reference line, adjust the headlamp.

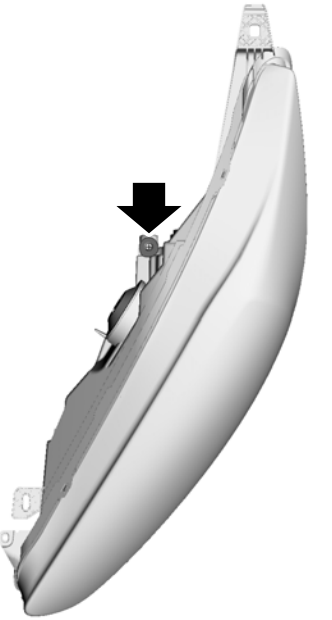

E156848

Information Provided by:
DEALER E-PROCESS

5. Locate the vertical adjuster on each headlamp. Using a Phillips #2 screwdriver, turn the adjuster either clockwise or counterclockwise in order to adjust the vertical aim of the headlamp. The horizontal edge of the brighter light should touch the horizontal reference line.
6. Close the hood and turn the lamps off.

Horizontal Aim Adjustment

Horizontal aim is not required for this vehicle and is not adjustable.

REMOVING A HEADLAMP

1. Open the hood. See **Opening and Closing the Hood** (page 177).

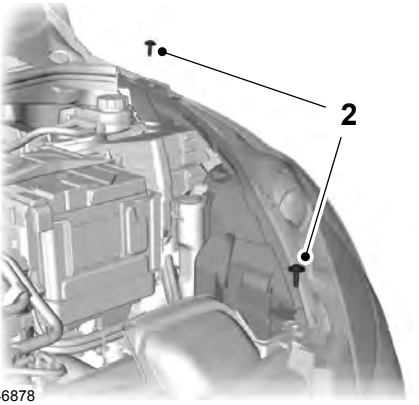

E146878

2. Remove the screws.

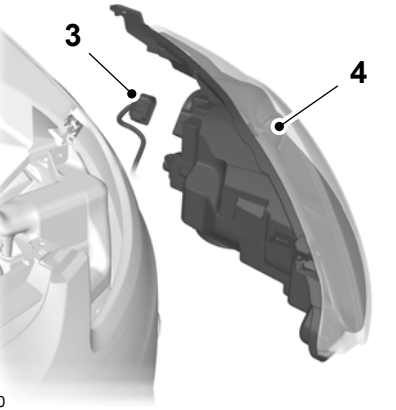

E102590

3. Disconnect the electrical connector.
4. Remove the headlamp.

Note: *When fitting the headlamp, make sure that you reconnect the electrical connector correctly.*

Note: *When fitting the headlamp, make sure that you fully engage the headlamp in the retaining clips.*

CHANGING A BULB - 4-DOOR

WARNINGS

Switch the lamps and the ignition off.

Let the bulb cool down before removing it.

Do not touch the glass of the bulb.

Note: *Only fit bulbs of the correct specification.*

Note: *The following instructions describe how to remove the bulbs. Fit replacements in the reverse order unless otherwise stated.*

Information Provided by: DEALER E-PROCESS

Headlamp

Note: *Remove the covers to gain access to the bulbs.*

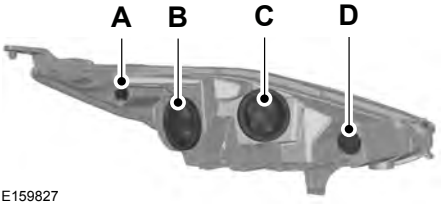

E159827

A	Side marker
B	Headlamp low beam
C	Headlamp high beam
D	Direction indicator

Side Marker

1. Remove the headlamp. See **Removing a Headlamp** (page 189).

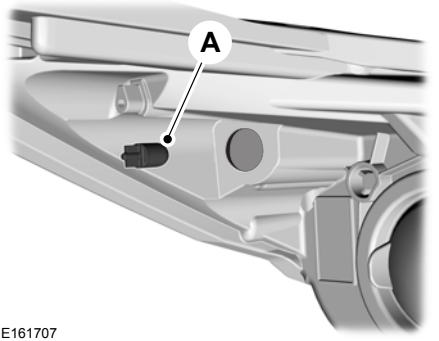

E161707

2. Remove the bulb holder.
3. Remove the bulb.

Headlamp Low Beam

1. Remove the headlamp. See **Removing a Headlamp** (page 189).

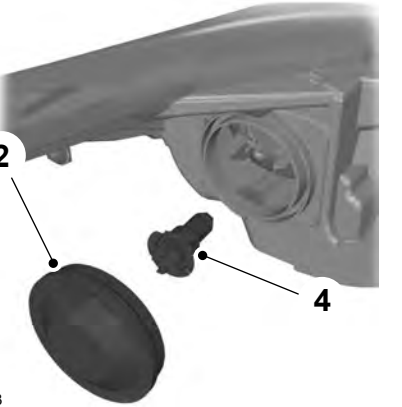

E146803

2. Remove the cover.
3. Disconnect the electrical connector.
4. Release the clip and remove the bulb.

Note: *Do not touch the glass of the bulb.*

Headlamp High Beam

1. Remove the headlamp. See **Removing a Headlamp** (page 189).

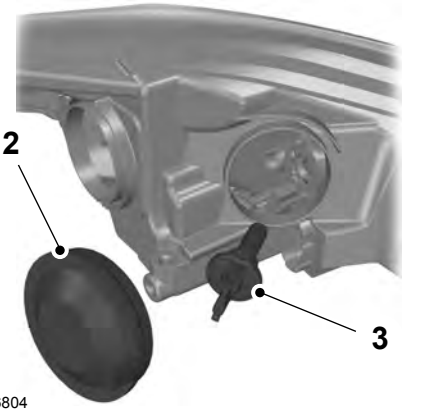

E146804

2. Remove the cover.

Information Provided by:
DEALER E-PROCESS

3. Turn the bulb counterclockwise and remove it.

Note: *Do not touch the glass of the bulb.*

Direction Indicator

1. Remove the headlamp. See **Removing a Headlamp** (page 189).

E146805

2. Turn the bulb holder counterclockwise and remove it.
3. Gently press the bulb into the bulb holder, turn it counterclockwise and remove it.

Side Direction Indicator

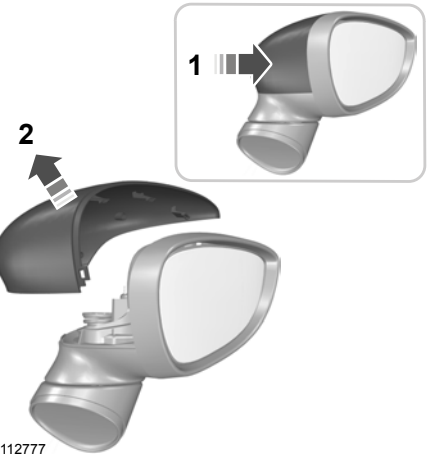

E112777

1. Press the side of the cover to release the clips.
2. Remove the cover.

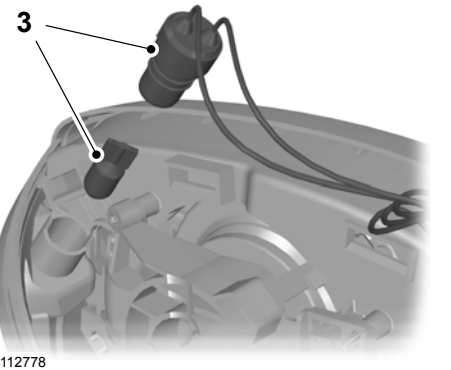

E112778

3. Remove the bulb and bulb holder. Remove the bulb.

Information Provided by:
DEALER E-PROCESS

Front Fog Lamps

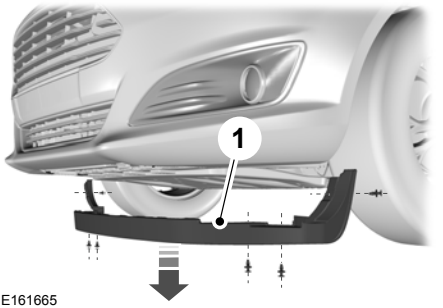

E161665

1. Remove the retaining clips to gain access to the lamp assembly.

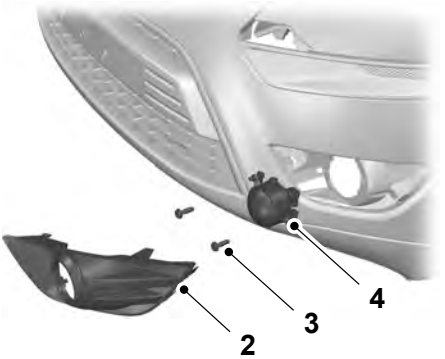

E161667

Note: *You cannot separate the fog lamp bulb from the bulb holder.*

2. Using a suitable implement, remove the cover.
3. Remove the screws.
4. Remove the lamp.

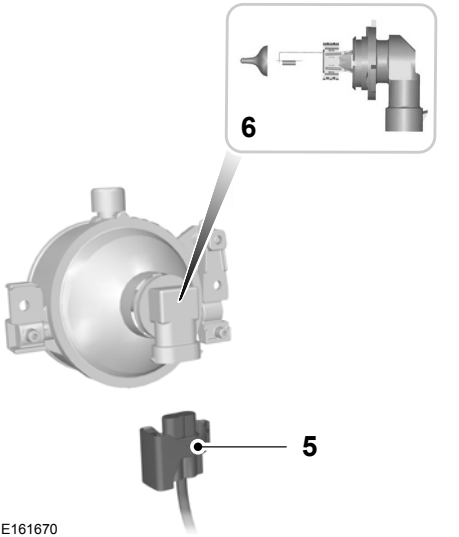

E161670

5. Disconnect the electrical connector.
6. Turn the bulb holder counterclockwise and remove it.

Rear Lamps

Brake, Tail and Direction Indicator Lamps

1. Remove the trim and disconnect the electrical connector.
2. Loosen the wing nut and carefully pull out the rear lamp.

Information Provided by:
DEALER E-PROCESS

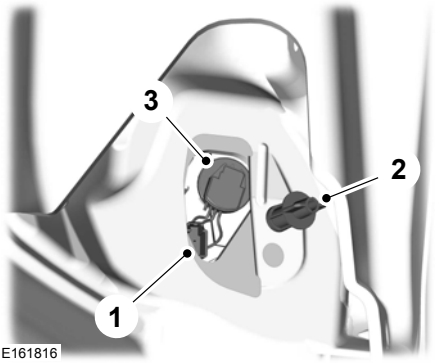

E161816

3. Unclip the bulb holder and remove it.
4. Remove the bulb.

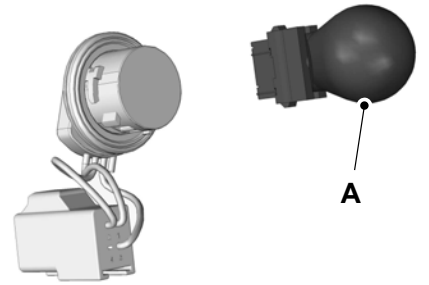

E161793

Reversing Lamp

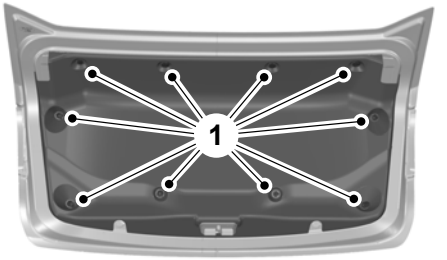

E113384

1. Remove the trim panel and disconnect the electrical connector.

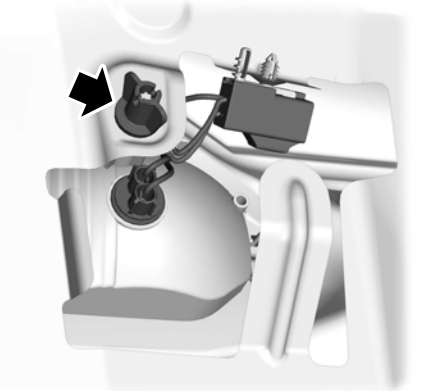
E161817

2. Loosen the wing nut and carefully pull out the rear lamp.

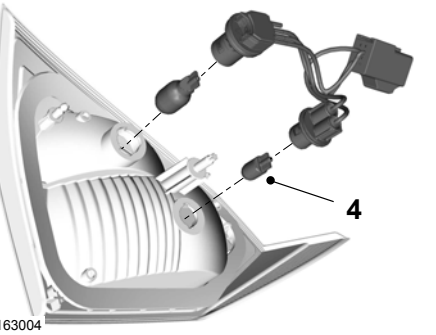

E163004

3. Turn the bulb holder counterclockwise and remove it.
4. Remove the bulb.

Center High Mounted Stop Lamp

Note: *The LED board is not a serviceable item, please consult your dealer if this fails.*

Information Provided by:
DEALER E-PROCESS

License Plate Lamp

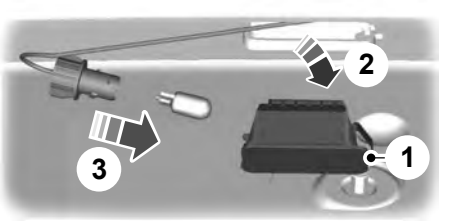

E72789

1. Carefully release the spring clip.
2. Remove the lamp.
3. Turn the bulb counterclockwise and remove it.

Interior Lamp

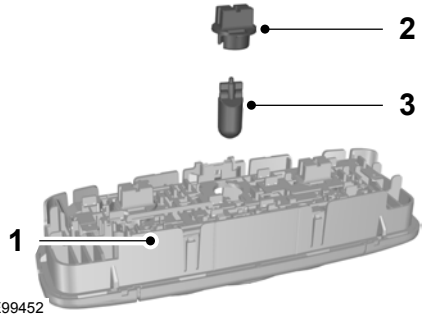

E99452

1. Carefully remove the lamp.
2. Turn the bulb holder counterclockwise and remove it.
3. Remove the bulb.

Reading Lamps

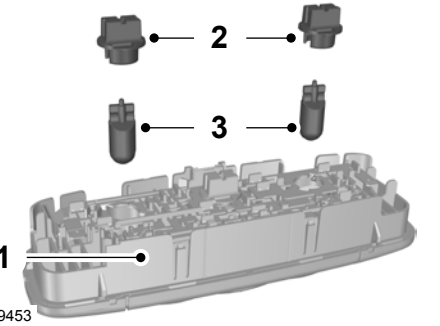

E99453

1. Carefully remove the lamp.
2. Turn the bulb holder counterclockwise and remove it.
3. Remove the bulb.

Luggage Compartment Lamp, Footwell Lamp and Liftgate Lamp

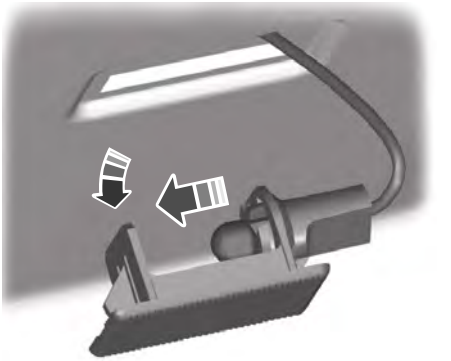

E72784

1. Carefully pry out the lamp.
2. Remove the bulb.

Information Provided by:
DEALER E-PROCESS

CHANGING A BULB - 5-DOOR

WARNINGS

Switch the lamps and the ignition off.

Let the bulb cool down before removing it.

Do not touch the glass of the bulb.

Note: *Only fit bulbs of the correct specification.*

Note: *The following instructions describe how to remove the bulbs. Fit replacements in the reverse order unless otherwise stated.*

Headlamp

Note: *Remove the covers to gain access to the bulbs.*

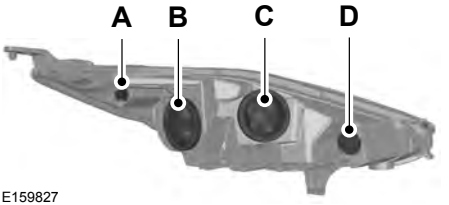

E159827

A	Side marker
B	Headlamp low beam
C	Headlamp high beam
D	Direction indicator

Side Marker

1. Remove the headlamp. See **Removing a Headlamp** (page 189).

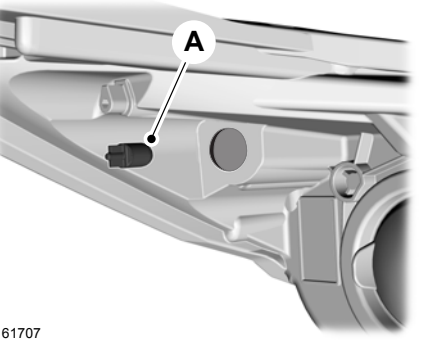

E161707

2. Remove the bulb holder.
3. Remove the bulb.

Headlamp Low Beam

1. Remove the headlamp. See **Removing a Headlamp** (page 189).

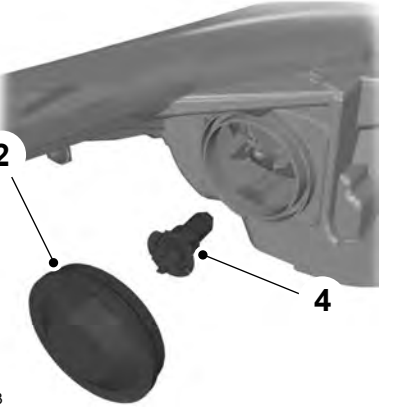

E146803

2. Remove the cover.
3. Disconnect the electrical connector.
4. Release the clip and remove the bulb.

Note: *Do not touch the glass of the bulb.*

Information Provided by:
DEALER E-PROCESS

Headlamp High Beam

1. Remove the headlamp. See **Removing a Headlamp** (page 189).

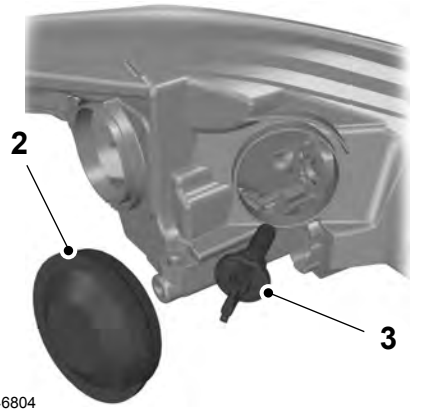

E146804

2. Remove the cover.
3. Turn the bulb counterclockwise and remove it.

Note: *Do not touch the glass of the bulb.*

Direction Indicator

1. Remove the headlamp. See **Removing a Headlamp** (page 189).

E146805

2. Turn the bulb holder counterclockwise and remove it.
3. Gently press the bulb into the bulb holder, turn it counterclockwise and remove it.

Side Direction Indicator

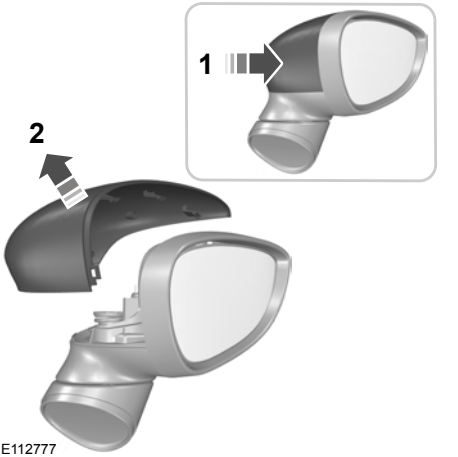

E112777

Information Provided by:
DEALER E-PROCESS

1. Press the side of the cover to release the clips.
2. Remove the cover.

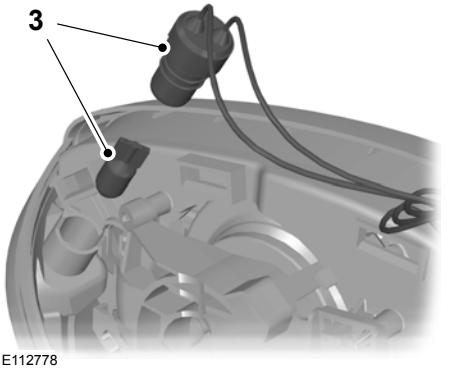

E112778

3. Remove the bulb and bulb holder. Remove the bulb.

Front Fog Lamps

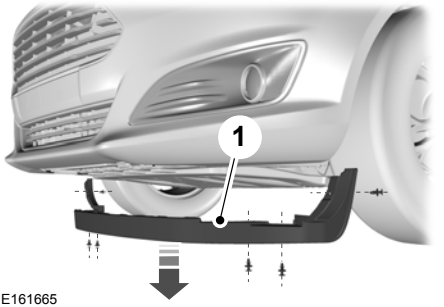

E161665

1. Remove the retaining clips to gain access to the lamp assembly.

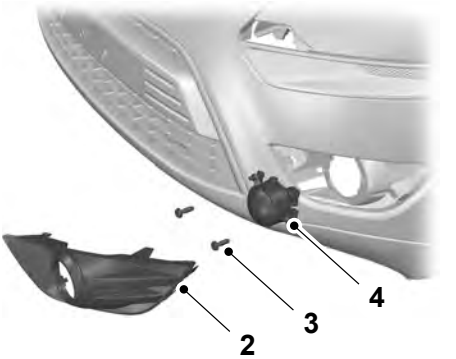

E161667

Note: *You cannot separate the fog lamp bulb from the bulb holder.*

2. Using a suitable implement, remove the cover.
3. Remove the screws.
4. Remove the lamp.

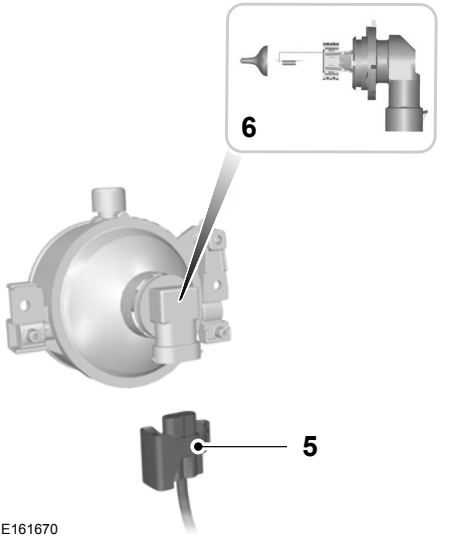

E161670

Information Provided by:
DEALER E-PROCESS

5. Disconnect the electrical connector.
6. Turn the bulb holder counterclockwise and remove it.

Rear Lamps

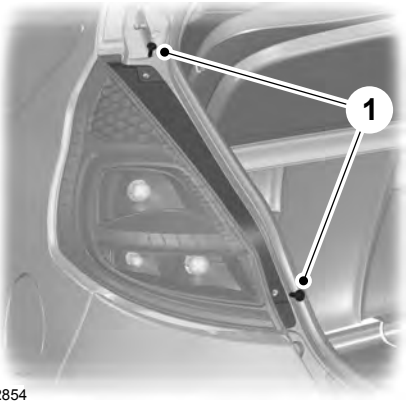

E102854

1. Remove the screws.

E161671

2. Disconnect the electrical connector.
3. Turn the bulb holder counterclockwise and remove it.

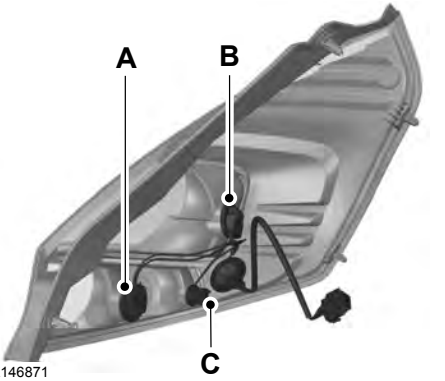

E146871

4. Gently press the bulb into the bulb holder, turn it counterclockwise and remove it.

A. Indicator
B. Tail and brake
C. Reverse

Center High Mounted Stop Lamp

Note: *The LED board is not a serviceable item, please consult your dealer if this fails.*

License Plate Lamp

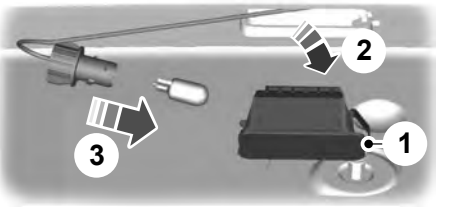

E72789

1. Carefully release the spring clip.
2. Remove the lamp.
3. Turn the bulb counterclockwise and remove it.

Information Provided by:
DEALER E-PROCESS

Interior Lamp

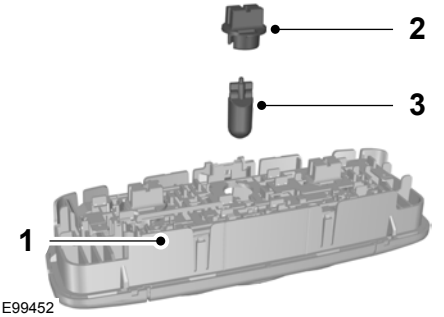

E99452

1. Carefully remove the lamp.
2. Turn the bulb holder counterclockwise and remove it.
3. Remove the bulb.

Reading Lamps

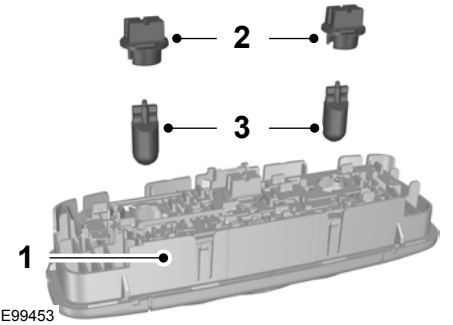

E99453

1. Carefully remove the lamp.
2. Turn the bulb holder counterclockwise and remove it.
3. Remove the bulb.

Luggage Compartment Lamp, Footwell Lamp and Liftgate Lamp

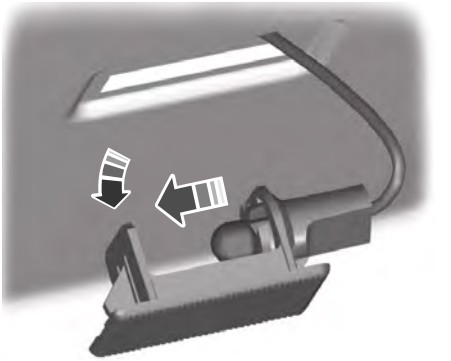

E72784

1. Carefully pry out the lamp.
2. Remove the bulb.

Information Provided by:
DEALER E-PROCESS

BULB SPECIFICATION CHART

Exterior Lamps

Lamp	Specification	Power (watt)
Front direction indicator.	PY27/7	27/7
Headlamp low beam.	H11	55
Headlamp high beam.	H1LL	55
Front fog lamp.	H11	55
Side direction indicator.	WY5W	5
Rear lamp, brake lamp and rear direction indicator.	PY27/7	27/7
Reversing lamp.	W16W	16
License plate lamp.	W5W	5

Note: *On some vehicles the lamps are LED. These are not serviceable items, have your vehicle checked by an authorized dealer as soon as possible.*

Interior Lamps

Lamp	Specification	Power (watt)
Interior lamp.	W6W	6
Map lamp.	W5W	5
Luggage compartment lamp.	W6W	6

Information Provided by:
DEALER E-PROCESS

CHANGING THE ENGINE AIR FILTER

WARNING

To reduce the risk of vehicle damage and personal burn injuries, do not start your engine with the air cleaner removed and do not remove it while the engine is running.

When changing the air filter element, use only the air filter element listed. See **Motorcraft Parts** (page 235).

On vehicles with an EcoBoost engine, when servicing the air cleaner it is important that no foreign material enters the air induction system. The engine and turbocharger are susceptible to damage from even small particles.

Change the air filter element at the correct interval. See **Normal Scheduled Maintenance** (page 319).

Note: *Failure to use the correct air filter element may result in severe engine damage. Your warranty may be void for any damage to the engine if the correct air filter element is not used.*

Vehicles with 1.0L EcoBoost and 1.6L EcoBoost Engine

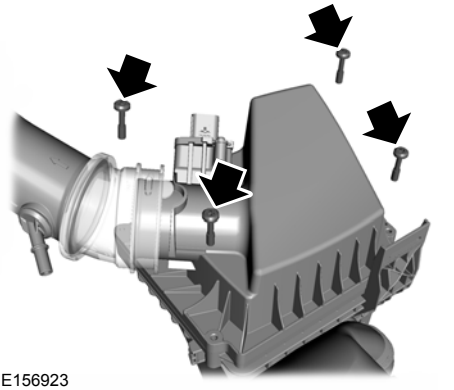

E156923

Vehicles with 1.6L Duratec-16V Engine

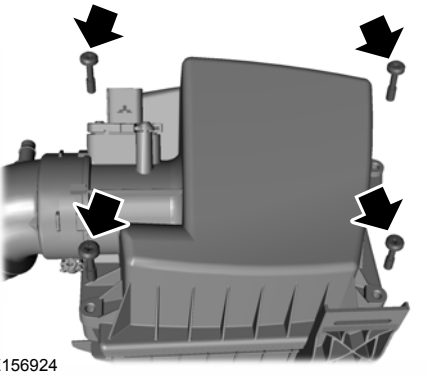

E156924

1. Remove the retaining screws that secure the air filter housing cover.
2. Carefully lift the air filter housing cover.
3. Remove the air filter element from the air filter housing.
4. Wipe any dirt or debris from the air filter housing and cover to make sure no dirt gets in the engine and to make sure you have a good seal.

Information Provided by: DEALER E-PROCESS

5. Install a new air filter element. Be careful not to crimp the filter element edges between the air filter housing and cover. This could cause filter damage and allow unfiltered air to enter the engine if not correctly seated.
6. Install the air filter housing cover.
7. Install the retaining screws to secure the air filter housing cover to the air filter housing.

Information Provided by:
DEALER E-PROCESS

CLEANING PRODUCTS

For best results, use the following products or products of equivalent quality:

- Motorcraft Bug and Tar Remover (ZC-42)
- Motorcraft Custom Bright Metal Cleaner (ZC-15)
- Motorcraft Detail Wash (ZC-3-A)
- Motorcraft Dusting Cloth (ZC-24)
- Motorcraft Engine Shampoo and Degreaser (U.S. only) (ZC-20)
- Motorcraft Engine Shampoo (Canada only) (CXC-66-A)
- Motorcraft Multi-Purpose Cleaner (Canada only) (CXC-101)
- Motorcraft Premium Glass Cleaner (Canada only) (CXC-100)
- Motorcraft Premium Quality Windshield Washer Fluid (Canada only) [CXC-37-(A, B, D or F)]
- Motorcraft Premium Windshield Wash Concentrate with Bitterant (U.S. only) (ZC-32-B2)
- Motorcraft Professional Strength Carpet & Upholstery Cleaner (ZC-54)
- Motorcraft Premium Leather and Vinyl Cleaner (ZC-56)
- Motorcraft Spot and Stain Remover (U.S. only) (ZC-14)
- Motorcraft Ultra-Clear Spray Glass Cleaner (ZC-23)
- Motorcraft Wheel and Tire Cleaner (ZC-37-A)

CLEANING THE EXTERIOR

Wash your vehicle regularly with cool or lukewarm water and a neutral pH shampoo, we recommend Motorcraft Detail Wash.

- Never use strong household detergents or soap, for example dish washing or laundry liquid. These products can discolor and spot painted surfaces.
- Never wash your vehicle when is hot to the touch, or during strong or direct sunlight.
- Dry your vehicle with a chamois or soft terry cloth towel to eliminate water spotting.
- Immediately remove fuel spillages, bird droppings, insect deposits and road tar. These may cause damage to your vehicle's paintwork or trim over time. We recommend Motorcraft Bug and Tar Remover.
- Remove any exterior accessories, for example antennas, before entering a car wash.

Note: *Suntan lotions and insect repellents can damage painted surfaces. If these substances come in contact with your vehicle, wash the affected area as soon as possible.*

Exterior Chrome Parts

- Apply a high quality-cleaning product to bumpers and other chrome parts. Follow the manufacturer's instructions. We recommend Motorcraft Custom Bright Metal Cleaner.
- Do not apply the cleaning product to hot surfaces. Do not leave the cleaning product on chrome surfaces longer than the time recommended.
- Using other non-recommended cleaners can result in severe and permanent cosmetic damage.

Note: *Never use abrasive materials, for example steel wool or plastic pads as they can scratch the chrome surface.*

Note: *Do not use chrome cleaner, metal cleaner or polish on wheels or wheel covers.*

Information Provided by:
DEALER E-PROCESS

Exterior Plastic Parts

For routine cleaning we recommend Motorcraft Detail Wash. If tar or grease spots are present, we recommend Motorcraft Bug and Tar Remover.

Stripes or Graphics (If Equipped)

Do not use a commercial or high-pressure sprayer on the surface or edge of stripes and graphics. This can damage them and cause the edges to peel away from the vehicle surface.

Underbody

Flush the complete underside of your vehicle frequently. Keep body and door drain holes free of debris or foreign material.

WAXING

Regular waxing is necessary to protect your car's paint from the elements. We recommend that you wash and wax the painted surface once or twice a year.

When washing and waxing, park your vehicle in a shaded area out of direct sunlight. Always wash your vehicle before applying wax.

- Use a quality wax that does not contain abrasives.
- Follow the manufacturer's instructions to apply and remove the wax.
- Apply a small amount of wax in a back-and-forth motion, not in circles.
- Do not allow wax to come in contact with any non-body (low-gloss black) colored trim. The wax will discolor or stain the parts over time.
  - Roof racks.
  - Bumpers.
  - Grained door handles.
  - Side moldings.
  - Mirror housings.
  - Windshield cowl area.
- Do not apply wax to glass areas.
- After waxing, your car's paint should feel smooth, and be free of streaks and smudges.

CLEANING THE ENGINE

Engines are more efficient when they are clean because grease and dirt buildup keep the engine warmer than normal.

When washing:

- Take care when using a power washer to clean the engine. The high-pressure fluid could penetrate the sealed parts and cause damage.
- Do not spray a hot engine with cold water to avoid cracking the engine block or other engine components.
- Spray Motorcraft Engine Shampoo and Degreaser on all parts that require cleaning and pressure rinse clean. In Canada, use Motorcraft Engine Shampoo.
- Never wash or rinse the engine while it is hot or running; water in the running engine may cause internal damage.

Information Provided by:
DEALER E-PROCESS

- Never wash or rinse any ignition coil, spark plug wire or spark plug well, or the area in and around these locations.
- Cover the battery, power distribution box, and air filter assembly to prevent water damage when cleaning the engine.

CLEANING THE WINDOWS AND WIPER BLADES

Car wash chemicals and environmental fallout can result in windshield and wiper blade contamination. Dirty windshield and wipers will result in poor windshield wiper operation. Keep the windshield and wiper blades clean to maintain windshield wiper performance.

To clean the windshield and wiper blades:

- Clean the windshield with a non-abrasive glass cleaner. When cleaning the interior of the windshield, avoid getting any glass cleaner on the instrument panel or door panels. Wipe any glass cleaner off these surfaces immediately.
- For windshields contaminated with tree sap, chemicals, wax or bugs, clean the entire windshield using steel wool (no greater than 0000 grade) in a circular motion and rinse with water.
- Clean the wiper blades with isopropyl rubbing alcohol or windshield washer concentrate.

Note: *Do not use razor blades or other sharp objects to clean or remove decals from the inside of the heated rear window. The vehicle warranty does not cover damage caused to the heated rear window grid lines.*

CLEANING THE INTERIOR

WARNINGS

Do not use cleaning solvents, bleach or dye on the vehicle's safety belts, as these actions may weaken the belt webbing.

On vehicles equipped with seat-mounted airbags, do not use chemical solvents or strong detergents. Such products could contaminate the side airbag system and affect performance of the side airbag in a collision.

For fabric, carpets, cloth seats, safety belts and seats equipped with side airbags:

- Remove dust and loose dirt with a vacuum cleaner.
- Remove light stains and soil with Motorcraft Professional Strength Carpet & Upholstery Cleaner.
- If grease or tar is present on the material, spot-clean the area first with Motorcraft Spot and Stain Remover. In Canada, use Motorcraft Multi-Purpose Cleaner.
- If a ring forms on the fabric after spot cleaning, clean the entire area immediately (but do not oversaturate) or the ring will set.
- Do not use household cleaning products or glass cleaners, which can stain and discolor the fabric and affect the flame retardant abilities of the seat materials.

Information Provided by: DEALER E-PROCESS

CLEANING THE INSTRUMENT PANEL AND INSTRUMENT CLUSTER LENS

WARNING

Do not use chemical solvents or strong detergents when cleaning the steering wheel or instrument panel to avoid contamination of the airbag system.

Note: *Follow the same procedure as cleaning leather seats for cleaning leather instrument panels and leather interior trim surfaces. See* ***Cleaning Leather Seats*** *(page 206).*

Clean the instrument panel and cluster lens with a clean, damp and soft cloth, then use a clean, dry and soft cloth to dry these areas.

- Avoid cleaners or polishes that increase the gloss of the upper portion of the instrument panel. The dull finish in this area helps protect you from undesirable windshield reflection.
- Do not use any household cleaning products or glass cleaners as these may damage the finish of the instrument panel, interior trim and cluster lens.
- Wash or wipe your hands clean if you have been in contact with certain products such as insect repellent and suntan lotion to avoid possible damage to the interior painted surfaces.
- Do not allow air fresheners and hand sanitizers to spill onto interior surfaces. If a spill occurs, wipe off immediately. Your warranty may not cover these damages.

If a staining liquid like coffee or juice has been spilled on the instrument panel or on interior trim surfaces:

1. Wipe up spilled liquid using a clean, soft cloth as quickly as possible.
2. Use Motorcraft Premium Leather and Vinyl Cleaner or a commercially available leather cleaning product for automotive interiors. Test any cleaner or stain remover on an inconspicuous area.
3. Alternatively, wipe the surface with a clean, soft cloth and a mild soap and water solution. Dry the area with a clean, soft cloth.
4. If necessary, apply more soap and water solution or cleaning product to a clean, soft cloth and press it onto the soiled area. Allow this to set at room temperature for 30 minutes.
5. Remove the soaked cloth, then with a clean, damp cloth, use a rubbing motion for 60 seconds on the soiled area.
6. Dry the area with a clean, soft cloth.

CLEANING LEATHER SEATS (If Equipped)

Note: *Follow the same procedure as cleaning leather seats for cleaning leather instrument panels and leather interior trim surfaces.*

For routine cleaning, wipe the surface with a soft, damp cloth and a mild soap and water solution. Dry the area with a clean, soft cloth.

For cleaning and removing stains such as dye transfer, use Motorcraft Premium Leather and Vinyl Cleaner or a commercially available leather cleaning product for automotive interiors.

Note: *Test any cleaner or stain remover on an inconspicuous area.*

Information Provided by: DEALER E-PROCESS

You should:

- Remove dust and loose dirt with a vacuum cleaner.
- Clean and treat spills and stains as soon as possible.

Do not use the following products as these may damage the leather:

- Oil and petroleum or silicone-based leather conditioners.
- Household cleaners.
- Alcohol solutions.
- Solvents or cleaners intended specifically for rubber, vinyl and plastics.

REPAIRING MINOR PAINT DAMAGE

You should repair paintwork damage caused by stones from the road or minor scratches as soon as possible. A choice of products are available from an authorized dealer.

Remove particles such as bird droppings, tree sap, insect deposits, tar spots, road salt and industrial fallout before repairing paint chips.

Always read and follow the manufacturer's instructions before using the products.

CLEANING THE ALLOY WHEELS

Note: *Do not apply a cleaning chemical to warm or hot wheel rims and covers.*

Note: *Industrial-strength (heavy-duty) cleaners, or cleaning chemicals, in combination with brush agitation to remove brake dust and dirt, could wear away the clear coat finish over a period of time.*

Note: *Do not use hydrofluoric acid-based or high caustic-based wheel cleaners, steel wool, fuels or strong household detergent.*

Note: *If you intend parking your vehicle for an extended period after cleaning the wheels with a wheel cleaner, drive your vehicle for a few minutes before doing so. This will reduce the risk of increased corrosion of the brake discs, brake pads and linings.*

Note: *Some automatic car washes may cause damage to the finish on your wheel rims and covers.*

Alloy wheels and wheel covers are coated with a clear coat paint finish. To maintain their condition we recommend that you:

- Clean them weekly with the recommended wheel and tire cleaner.
- Use a sponge to remove heavy deposits of dirt and brake dust accumulation.
- Rinse them thoroughly with a pressurized stream of water when you have completed the cleaning process.

We recommend that you use Ford service wheel cleaner. Make sure that you read and follow the manufacturer's instructions.

Using other non-recommended cleaning products can result in severe and permanent cosmetic damage.

VEHICLE STORAGE

If you plan on storing your vehicle for 30 days or more, read the following maintenance recommendations to make sure your vehicle stays in good operating condition.

Information Provided by: DEALER E-PROCESS

We engineer and test all motor vehicles and their components for reliable, regular driving. Under various conditions, long-term storage may lead to degraded engine performance or failure unless you use specific precautions to preserve engine components.

General

- Store all vehicles in a dry, ventilated place.
- Protect from sunlight, if possible.
- If vehicles are stored outside, they require regular maintenance to protect against rust and damage.

Body

- Wash your vehicle thoroughly to remove dirt, grease, oil, tar or mud from exterior surfaces, rear-wheel housing and the underside of front fenders.
- Periodically wash your vehicle if it is stored in exposed locations.
- Touch-up exposed or primed metal to prevent rust.
- Cover chrome and stainless steel parts with a thick coat of auto wax to prevent discoloration. Re-wax as necessary when you wash your vehicle.
- Lubricate all hood, door and luggage compartment hinges and latches with a light grade oil.
- Cover interior trim to prevent fading.
- Keep all rubber parts free from oil and solvents.

Engine

- Change the engine oil and filter prior to storage because used engine oil contains contaminates which may cause engine damage.
- Start the engine every 15 days for a minimum of 15 minutes. Run at fast idle with the climate controls set to defrost until the engine reaches normal operating temperature.
- With your foot on the brake, shift through all the gears while the engine is running.
- We recommend that you change the engine oil before you use your vehicle again.

Fuel system

- Fill the fuel tank with high-quality fuel until the first automatic shutoff of the fuel pump nozzle.

Cooling system

- Protect against freezing temperatures.
- When removing your vehicle from storage, check coolant fluid level. Confirm that there are no cooling system leaks and that fluid is at the recommended level.

Battery

- Check and recharge as necessary. Keep connections clean.
- If storing your vehicle for more than 30 days without recharging the battery, we recommend that you disconnect the battery cables to maintain battery charge for quick starting.

Note: *It is necessary to reset memory features if battery cables are disconnected.*

Information Provided by:
DEALER E-PROCESS

Brakes

- Make sure the brakes and parking brake release fully.

Tires

- Maintain recommended air pressure.

Miscellaneous

- Make sure all linkages, cables, levers and pins under your vehicle are covered with grease to prevent rust.
- Move vehicles at least 25 ft (7.5 m) every 15 days to lubricate working parts and prevent corrosion.

Removing Vehicle From Storage

When your vehicle is ready to come out of storage, do the following:

- Wash your vehicle to remove any dirt or grease film build-up on window surfaces.
- Check windshield wipers for any deterioration.
- Check under the hood for any foreign material that may have collected during storage such as mice or squirrel nests.
- Check the exhaust for any foreign material that may have collected during storage.
- Check tire pressures and set tire inflation per the Tire Label.
- Check brake pedal operation. Drive your vehicle 15 ft (4.5 m) back and forth to remove rust build-up.
- Check fluid levels (including coolant, oil and gas) to make sure there are no leaks, and fluids are at recommended levels.
- If you remove the battery, clean the battery cable ends and check for damage.

Contact an authorized dealer if you have any concerns or issues.

Information Provided by:
DEALER E-PROCESS

GENERAL INFORMATION

A decal with tire pressure data is located in the driver's door opening.

Check and set the tire pressure at the ambient temperature in which you are intending to drive your vehicle and when the tires are cold.

Note: *Check your tire pressures regularly to optimize fuel economy.*

Note: *Use only approved wheel and tire sizes. Using other sizes could damage your vehicle and will make the National Type Approval invalid.*

Note: *If you change the diameter of the tires from that fitted at the factory, the speedometer may not display the correct speed. Take your vehicle to an authorized dealer to have the engine management system reprogrammed.*

TIRE CARE

Important information for 205/40R17 low-profile tires and wheels

If your vehicle is equipped with 205/40R17 tires, they are low-profile tires. These tires and wheels are designed to give your vehicle a sport appearance. With low-profile tires, you may notice an increase in road noise and faster tire wear, depending on road conditions and driving styles. Due to their design, low-profile tires and wheels are more prone to road damage from potholes, rough or unpaved roads, car wash rails and curb contact than standard tires and wheels.

Note: *Your vehicle's warranty does not cover these types of damage. Tires should always be kept at the correct inflation pressures and extra caution should be taken when operating on rough roads to avoid impacts that could cause wheel and tire damage.*

Information About Uniform Tire Quality Grading

E142542

Tire Quality Grades apply to new pneumatic passenger car tires. The Quality grades can be found where applicable on the tire sidewall between tread shoulder and maximum section width. For example: **Treadwear 200 Traction AA Temperature A**.

These Tire Quality Grades are determined by standards that the United States Department of Transportation has set.

Information Provided by: DEALER E-PROCESS

Tire Quality Grades apply to new pneumatic passenger car tires. They do not apply to deep tread, winter-type snow tires, space-saver or temporary use spare tires, light truck or LT type tires, tires with nominal rim diameters of 10 to 12 inches or limited production tires as defined in Title 49 Code of Federal Regulations Part 575.104 (c)(2).

U.S. Department of Transportation Tire quality grades: The U.S. Department of Transportation requires Ford Motor Company to give you the following information about tire grades exactly as the government has written it.

Treadwear

The treadwear grade is a comparative rating based on the wear rate of the tire when tested under controlled conditions on a specified government test course. For example, a tire graded 150 would wear one and one-half (1 ½) times as well on the government course as a tire graded 100. The relative performance of tires depends upon the actual conditions of their use, however, and may depart significantly from the norm due to variations in driving habits, service practices, and differences in road characteristics and climate.

Traction AA A B C

WARNING

The traction grade assigned to this tire is based on straight-ahead braking traction tests, and does not include acceleration, cornering, hydroplaning or peak traction characteristics.

The traction grades, from highest to lowest are AA, A, B, and C. The grades represent the tire's ability to stop on wet pavement as measured under controlled conditions on specified government test surfaces of asphalt and concrete. A tire marked C may have poor traction performance.

Temperature A B C

WARNING

The temperature grade for this tire is established for a tire that is properly inflated and not overloaded. Excessive speed, under-inflation, or excessive loading, either separately or in combination, can cause heat buildup and possible tire failure.

The temperature grades are A (the highest), B and C, representing the tire's resistance to the generation of heat and its ability to dissipate heat when tested under controlled conditions on a specified indoor laboratory

Information Provided by: DEALER E-PROCESS

test wheel. Sustained high temperature can cause the material of the tire to degenerate and reduce tire life, and excessive temperature can lead to sudden tire failure. The grade C corresponds to a level of performance which all passenger car tires must meet under the Federal Motor Vehicle Safety Standard No. 139. Grades B and A represent higher levels of performance on the laboratory test wheel than the minimum required by law.

Glossary of Tire Terminology

* **Tire label:** A label showing the OE (Original Equipment) tire sizes, recommended inflation pressure and the maximum weight the vehicle can carry.

***Tire Identification Number (TIN):** A number on the sidewall of each tire providing information about the tire brand and manufacturing plant, tire size and date of manufacture. Also referred to as DOT code.

***Inflation pressure:** A measure of the amount of air in a tire.

***Standard load:** A class of P-metric or Metric tires designed to carry a maximum load at 36 psi (2.5 bar). Increasing the inflation pressure beyond this pressure will not increase the tire's load carrying capability.

***Extra load:** A class of P-metric or Metric tires designed to carry a heavier maximum load at 42 psi (2.9 bar). Increasing the inflation pressure beyond this pressure will not increase the tire's load carrying capability.

***kPa:** Kilopascal, a metric unit of air pressure.

***PSI:** Pounds per square inch, a standard unit of air pressure.

***Cold tire pressure:** The tire pressure when the vehicle has been stationary and out of direct sunlight for an hour or more and prior to the vehicle being driven for 1 mile (1.6 kilometers).

***Recommended inflation pressure:** The cold inflation pressure found on the Safety Compliance Certification Label (affixed to either the door hinge pillar, door-latch post, or the door edge that meets the door-latch post, next to the driver's seating position), or Tire Label located on the B-Pillar or the edge of the driver's door.

***B-pillar:** The structural member at the side of the vehicle behind the front door

* **Bead area of the tire:** Area of the tire next to the rim.

* **Sidewall of the tire:** Area between the bead area and the tread.

Information Provided by:
DEALER E-PROCESS

* **Tread area of the tire:** Area of the perimeter of the tire that contacts the road when mounted on the vehicle.

***Rim:** The metal support (wheel) for a tire or a tire and tube assembly upon which the tire beads are seated.

Information Contained on the Tire Sidewall

Both U.S. and Canada Federal regulations require tire manufacturers to place standardized information on the sidewall of all tires. This information identifies and describes the fundamental characteristics of the tire and also provides a U.S. DOT Tire Identification Number for safety standard certification and in case of a recall.

Information on P Type Tires

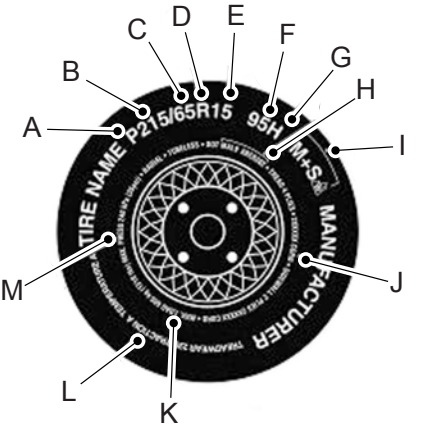

E142543

P215/65R15 95H is an example of a tire size, load index and speed rating. The definitions of these items are listed below. (Note that the tire size, load index and speed rating for your vehicle may be different from this example.)

A. **P:** Indicates a tire, designated by the Tire and Rim Association (T&RA), that may be used for service on cars, SUVs, minivans and light trucks. **Note:** If your tire size does not begin with a letter this may mean it is designated by either ETRTO (European Tire and Rim Technical Organization) or JATMA (Japan Tire Manufacturing Association).

Information Provided by:
DEALER E-PROCESS

B. **215:** Indicates the nominal width of the tire in millimeters from sidewall edge to sidewall edge. In general, the larger the number, the wider the tire.

C. **65:** Indicates the aspect ratio which gives the tire's ratio of height to width.

D. **R:** Indicates a radial type tire.

E. **15:** Indicates the wheel or rim diameter in inches. If you change your wheel size, you will have to purchase new tires to match the new wheel diameter.

F. **95:** Indicates the tire's load index. It is an index that relates to how much weight a tire can carry. You may find this information in your owner's manual. If not, contact a local tire dealer.

Note: *You may not find this information on all tires because it is not required by federal law.*

G. **H:** Indicates the tire's speed rating. The speed rating denotes the speed at which a tire is designed to be driven for extended periods of time under a standard condition of load and inflation pressure. The tires on your vehicle may operate at different conditions for load and inflation pressure. These speed ratings may need to be adjusted for the difference in conditions. The ratings range from 81 mph (130 km/h) to 186 mph (299 km/h). These ratings are listed in the following chart.

Note: *You may not find this information on all tires because it is not required by federal law.*

Letter rating	Speed rating - mph (km/h)
M	81 mph (130 km/h)
N	87 mph (140 km/h)
Q	99 mph (159 km/h)
R	106 mph (171 km/h)
S	112 mph (180 km/h)
T	118 mph (190 km/h)
U	124 mph (200 km/h)
H	130 mph (210 km/h)
V	149 mph (240 km/h)
W	168 mph (270 km/h)
Y	186 mph (299 km/h)

Note: *For tires with a maximum speed capability over 149 mph (240 km/h), tire manufacturers sometimes use the letters ZR. For those with a maximum speed capability over 186 mph (299 km/h), tire manufacturers always use the letters ZR.*

H. **U.S. DOT Tire Identification Number (TIN):** This begins with the letters DOT and indicates that the tire meets all federal standards. The next two numbers or letters are the plant code designating where it was manufactured, the next two are

Information Provided by: DEALER E-PROCESS

the tire size code and the last four numbers represent the week and year the tire was built. For example, the numbers 317 mean the 31st week of 1997. After 2000 the numbers go to four digits. For example, 2501 means the 25th week of 2001. The numbers in between are identification codes used for traceability. This information is used to contact customers if a tire defect requires a recall.

I. **M+S or M/S:** Mud and Snow, or

AT: All Terrain, or

AS: All Season.

J. **Tire Ply Composition and Material Used:** Indicates the number of plies or the number of layers of rubber-coated fabric in the tire tread and sidewall. Tire manufacturers also must indicate the ply materials in the tire and the sidewall, which include steel, nylon, polyester, and others.

K. **Maximum Load:** Indicates the maximum load in kilograms and pounds that can be carried by the tire. Refer to the Safety Compliance Certification Label (affixed to either the door hinge pillar, door-latch post, or the door edge that meets the door-latch post, next to the driver's seating position), for the correct tire pressure for your vehicle.

L. **Treadwear, Traction and Temperature Grades:**

*__Treadwear__ The treadwear grade is a comparative rating based on the wear rate of the tire when tested under controlled conditions on a specified government test course. For example, a tire graded 150 would wear one and one-half times as well on the government course as a tire graded 100.

*__Traction:__ The traction grades, from highest to lowest are AA, A, B, and C. The grades represent the tire's ability to stop on wet pavement as measured under controlled conditions on specified government test surfaces of asphalt and concrete. A tire marked C may have poor traction performance.

*__Temperature:__ The temperature grades are A (the highest), B and C, representing the tire's resistance to the generation of heat and its ability to dissipate heat when tested under controlled conditions on a specified indoor laboratory test wheel.

M. **Maximum Inflation Pressure:** Indicates the tire manufacturers' maximum permissible pressure or the pressure at which the maximum load can be carried by the tire. This pressure is normally higher than the vehicle manufacturer's recommended cold inflation pressure which can be found on the Safety Compliance Certification Label (affixed to either the door hinge pillar, door-latch post, or the door edge

Information Provided by: DEALER E-PRACTICE

that meets the door-latch post, next to the driver's seating position), or Tire Label which is located on the B-Pillar or the edge of the driver's door. The cold inflation pressure should never be set lower than the recommended pressure on the vehicle label.

The tire suppliers may have additional markings, notes or warnings such as standard load, radial tubeless, etc.

Additional Information Contained on the Tire Sidewall for LT Type Tires

Note: *Tire Quality Grades do not apply to this type of tire.*

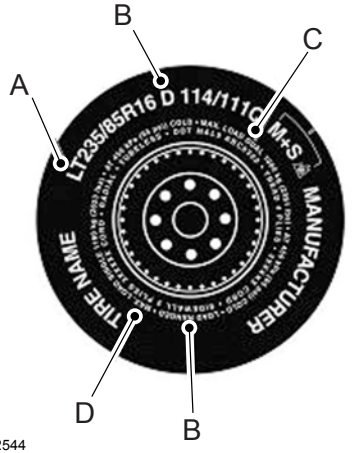

E142544

LT type tires have some additional information beyond those of P type tires; these differences are described below.

A. **LT:** Indicates a tire, designated by the Tire and Rim Association (T&RA), that is intended for service on light trucks.

B. **Load Range and Load Inflation Limits:** Indicates the tire's load-carrying capabilities and its inflation limits.

C. **Maximum Load Dual lb (kg) at psi (kPa) cold:** Indicates the maximum load and tire pressure when the tire is used as a dual; defined as four tires on the rear axle (a total of six or more tires on the vehicle).

D. **Maximum Load Single lb (kg) at psi (kPa) cold:** Indicates the maximum load and tire pressure when the tire is used as a single; defined as two tires (total) on the rear axle.

Information on T Type Tires

T145/80D16 is an example of a tire size.

Note: *The temporary tire size for your vehicle may be different from this example. Tire Quality Grades do not apply to this type of tire.*

Information Provided by:
DEALER E-PROCESS

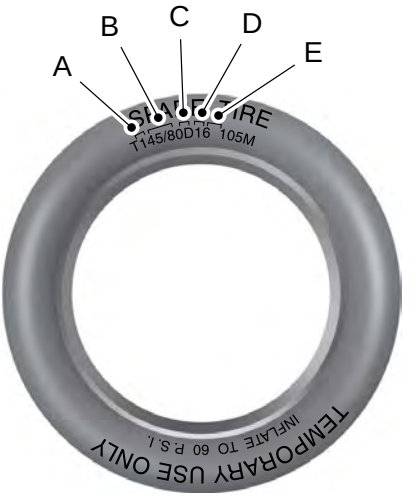

E142545

T type tires have some additional information beyond those of P type tires; these differences are described below:

A. **T:** Indicates a type of tire, designated by the Tire and Rim Association (T&RA), that is intended for temporary service on cars, SUVs, minivans and light trucks.

B. **145:** Indicates the nominal width of the tire in millimeters from sidewall edge to sidewall edge. In general, the larger the number, the wider the tire.

C. **80:** Indicates the aspect ratio which gives the tire's ratio of height to width. Numbers of 70 or lower indicate a short sidewall.

D. **D:** Indicates a diagonal type tire.

R: Indicates a radial type tire.

E. **16:** Indicates the wheel or rim diameter in inches. If you change your wheel size, you will have to purchase new tires to match the new wheel diameter.

Location of the Tire Label

You will find a Tire Label containing tire inflation pressure by tire size and other important information located on the B-Pillar or the edge of the driver's door.

Inflating Your Tires

Safe operation of your vehicle requires that your tires are properly inflated. Remember that a tire can lose up to half of its air pressure without appearing flat.

Every day before you drive, check your tires. If one looks lower than the others, use a tire gauge to check pressure of all tires and adjust if required.

At least once a month and before long trips, inspect each tire and check the tire pressure with a tire gauge (including spare, if equipped). Inflate all tires to the inflation pressure recommended by Ford Motor Company.

Information Provided by:
DEALER E-PROCESS

You are strongly urged to buy a reliable tire pressure gauge, as automatic service station gauges may be inaccurate. Ford recommends the use of a digital or dial-type tire pressure gauge rather than a stick-type tire pressure gauge.

Use the recommended cold inflation pressure for optimum tire performance and wear. Under-inflation or over-inflation may cause uneven treadwear patterns

WARNING

Under-inflation is the most common cause of tire failures and may result in severe tire cracking, tread separation or blowout, with unexpected loss of vehicle control and increased risk of injury. Under-inflation increases sidewall flexing and rolling resistance, resulting in heat buildup and internal damage to the tire. It also may result in unnecessary tire stress, irregular wear, loss of vehicle control and accidents. A tire can lose up to half of its air pressure and not appear to be flat!

Always inflate your tires to the Ford recommended inflation pressure even if it is less than the maximum inflation pressure information found on the tire. The Ford recommended tire inflation pressure is found on the Safety Compliance Certification Label (affixed to either the door hinge pillar, door-latch post, or the door edge that meets the door-latch post, next to the driver's seating position), or Tire Label which is located on the B-Pillar or the edge of the driver’s door. Failure to follow the tire pressure recommendations can cause uneven treadwear patterns and adversely affect the way your vehicle handles

Maximum Inflation Pressure is the tire manufacturer's maximum permissible pressure and the pressure at which the maximum load can be carried by the tire. This pressure is normally higher than the manufacturer’s recommended cold inflation pressure which can be found on the Safety Compliance Certification Label (affixed to either the door hinge pillar, door-latch post, or the door edge that meets the door-latch post, next to the driver's seating position), or Tire Label which is located on the B-Pillar or the edge of the driver’s door. The cold inflation pressure should never be set lower than the recommended pressure on the Safety Compliance Certification Label or Tire Label.

Information Provided by:
DEALER E-PROCESS

When weather temperature changes occur, tire inflation pressures also change. A 10ºF (6ºC) temperature drop can cause a corresponding drop of 1 psi (7 kPa) in inflation pressure. Check your tire pressures frequently and adjust them to the proper pressure which can be found on the Safety Compliance Certification Label or Tire Label.

To check the pressure in your tire(s):

1. Make sure the tires are cool, meaning they are not hot from driving even a mile.

Note: *If you are checking tire pressure when the tire is hot, (i.e. driven more than 1 mile [1.6 km]), never bleed or reduce air pressure. The tires are hot from driving and it is normal for pressures to increase above recommended cold pressures. A hot tire at or below recommended cold inflation pressure could be significantly under-inflated.*

Note: *If you have to drive a distance to get air for your tire(s), check and record the tire pressure first and add the appropriate air pressure when you get to the pump. It is normal for tires to heat up and the air pressure inside to go up as you drive.*

2. Remove the cap from the valve on one tire, then firmly press the tire gauge onto the valve and measure the pressure.

3. Add enough air to reach the recommended air pressure.

Note: *If you overfill the tire, release air by pressing on the metal stem in the center of the valve. Then recheck the pressure with your tire gauge.*

4. Replace the valve cap.

5. Repeat this procedure for each tire, including the spare.

Note: *Some spare tires operate at a higher inflation pressure than the other tires. For T type mini-spare tires (refer to the Dissimilar spare wheel and tire assembly information for a description): Store and maintain at 60 psi (4.15 bar). For full-size and dissimilar spare tires (refer to the Dissimilar spare wheel and tire assembly information for a description): Store and maintain at the higher of the front and rear inflation pressure as shown on the Tire Label.*

6. Visually inspect the tires to make sure there are no nails or other objects embedded that could poke a hole in the tire and cause an air leak.

7. Check the sidewalls to make sure there are no gouges, cuts or bulges.

Information Provided by:
DEALER E-PROCESS

Inspecting Your Tires and Wheel Valve Stems

Periodically inspect the tire treads for uneven or excessive wear and remove objects such as stones, nails or glass that may be wedged in the tread grooves. Check the tire and valve stems for holes, cracks, or cuts that may permit air leakage and repair or replace the tire and replace the valve stem. Inspect the tire sidewalls for cracking, cuts, bruises and other signs of damage or excessive wear. If internal damage to the tire is suspected, have the tire demounted and inspected in case it needs to be repaired or replaced. For your safety, tires that are damaged or show signs of excessive wear should not be used because they are more likely to blow out or fail.

Improper or inadequate vehicle maintenance can cause tires to wear abnormally. Inspect all your tires, including the spare, frequently, and replace them if one or more of the following conditions exist:

Tire Wear

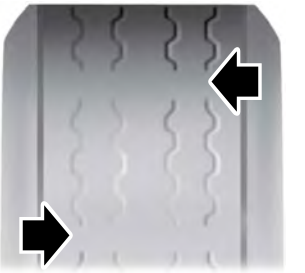

E142546

When the tread is worn down to one sixteenth of an inch (2 mm), tires must be replaced to help prevent your vehicle from skidding and hydroplaning. Built-in treadwear indicators, or wear bars, which look like narrow strips of smooth rubber across the tread will appear on the tire when the tread is worn down to one sixteenth of an inch (2 mm)

When the tire tread wears down to the same height as these wear bars, the tire is worn out and must be replaced.

Damage

Periodically inspect the tire treads and sidewalls for damage (such as bulges in the tread or sidewalls, cracks in the tread groove and separation in the tread or sidewall). If damage is observed

Information Provided by:
DEALER E-PROCESS

or suspected have the tire inspected by a tire professional. Tires can be damaged during off-road use, so inspection after off-road use is also recommended.

Age

WARNING

Tires degrade over time depending on many factors such as weather, storage conditions, and conditions of use (load, speed, inflation pressure, etc.) the tires experience throughout their lives.

In general, tires should be replaced after six years regardless of tread wear. However, heat caused by hot climates or frequent high loading conditions can accelerate the aging process and may require tires to be replaced more frequently.

You should replace your spare tire when you replace the road tires or after six years due to aging even if it has not been used.

U.S. DOT Tire Identification Number (TIN)

Both U.S. and Canada Federal regulations require tire manufacturers to place standardized information on the sidewall of all tires. This information identifies and describes the fundamental characteristics of the tire and also provides a U.S. DOT Tire Identification Number for safety standard certification and in case of a recall.

This begins with the letters DOT and indicates that the tire meets all federal standards. The next two numbers or letters are the plant code designating where it was manufactured, the next two are the tire size code and the last four numbers represent the week and year the tire was built. For example, the numbers 317 mean the 31st week of 1997. After 2000 the numbers go to four digits. For example, 2501 means the 25th week of 2001. The numbers in between are identification codes used for traceability. This information is used to contact customers if a tire defect requires a recall.

Tire Replacement Requirements

Your vehicle is equipped with tires designed to provide a safe ride and handling capability.

WARNINGS

Only use replacement tires and wheels that are the same size, load index, speed rating and type (such as P-metric versus LT-metric or all-season versus all-terrain) as those originally provided by Ford. The recommended tire and wheel size

Information Provided by: DEALER E-PROCESS

WARNINGS

may be found on either the Safety Compliance Certification Label (affixed to either the door hinge pillar, door-latch post, or the door edge that meets the door-latch post, next to the driver's seating position), or the Tire Label which is located on the B-Pillar or edge of the driver's door. If this information is not found on these labels then you should contact your authorized dealer as soon as possible. Use of any tire or wheel not recommended by Ford can affect the safety and performance of your vehicle, which could result in an increased risk of loss of vehicle control, vehicle rollover, personal injury and death. Additionally the use of non-recommended tires and wheels could cause steering, suspension, axle, transfer case or power transfer unit failure. If you have questions regarding tire replacement, contact your authorized dealer as soon as possible.

When mounting replacement tires and wheels, you should not exceed the maximum pressure indicated on the sidewall of the tire to set the beads without additional precautions listed below. If the beads do not seat at the maximum pressure indicated, re-lubricate and try again.

WARNINGS

When inflating the tire for mounting pressures up to 20 psi (1.38 bar) greater than the maximum pressure on the tire sidewall, the following precautions must be taken to protect the person mounting the tire:

1. Make sure that you have the correct tire and wheel size.

2. Lubricate the tire bead and wheel bead seat area again.

3. Stand at a minimum of 12 ft (3.66 m) away from the wheel and tire assembly.

4. Use both eye and ear protection.

For a mounting pressure more than 20 psi (1.38 bar) greater than the maximum pressure, a Ford dealer or other tire service professional should do the mounting.

Always inflate steel carcass tires with a remote air fill with the person inflating standing at a minimum of 12 ft (3.66 m) away from the wheel and tire assembly

Important: Remember to replace the wheel valve stems when the road tires are replaced on your vehicle

Information Provided by: DEALER E-PROCESS

It is recommended that the two front tires or two rear tires generally be replaced as a pair.

The tire pressure sensors mounted in the wheels (originally installed on your vehicle) are not designed to be used in aftermarket wheels.

The use of wheels or tires not recommended by Ford Motor Company may affect the operation of your tire pressure monitoring system.

If the TPMS indicator is flashing, your TPMS is malfunctioning. Your replacement tire might be incompatible with your TPMS, or some component of the TPMS may be damaged.

Safety Practices

WARNINGS

If your vehicle is stuck in snow, mud, sand, etc., do not rapidly spin the tires; spinning the tires can tear the tire and cause an explosion. A tire can explode in as little as three to five seconds.

Do not spin the wheels at over 35 mph (56 km/h). The tires may fail and injure a passenger or bystander.

Driving habits have a great deal to do with your tire mileage and safety.

*Observe posted speed limits

*Avoid fast starts, stops and turns

*Avoid potholes and objects on the road

*Do not run over curbs or hit the tire against a curb when parking

Highway Hazards

No matter how carefully you drive there's always the possibility that you may eventually have a flat tire on the highway. Drive slowly to the closest safe area out of traffic. This may further damage the flat tire, but your safety is more important.

If you feel a sudden vibration or ride disturbance while driving, or you suspect your tire or vehicle has been damaged, immediately reduce your speed. Drive with caution until you can safely pull off the road. Stop and inspect the tires for damage. If a tire is under-inflated or damaged, deflate it, remove wheel and replace it with your spare tire and wheel. If you cannot detect a cause, have the vehicle towed to the nearest repair facility or tire dealer to have the vehicle inspected.

Information Provided by: DEALER E-PROCESS

Tire and Wheel Alignment

A bad jolt from hitting a curb or pothole can cause the front end of your vehicle to become misaligned or cause damage to your tires. If your vehicle seems to pull to one side when you're driving, the wheels may be out of alignment. Have an authorized dealer check the wheel alignment periodically.

Wheel misalignment in the front or the rear can cause uneven and rapid treadwear of your tires and should be corrected by an authorized dealer. Front-wheel drive vehicles and those with an independent rear suspension (if equipped) may require alignment of all four wheels.

The tires should also be balanced periodically. An unbalanced tire and wheel assembly may result in irregular tire wear.

Tire Rotation

Note: *If your tires show uneven wear ask an authorized dealer to check for and correct any wheel misalignment, tire imbalance or mechanical problem involved before tire rotation.*

Note: *Your vehicle may be equipped with a dissimilar spare wheel and tire assembly. A dissimilar spare wheel and tire assembly is defined as a spare wheel and tire assembly that is different in brand, size or appearance from the road tires and wheels. If you have a dissimilar spare wheel and tire assembly it is intended for temporary use only and should not be used in a tire rotation.*

Note: *After having your tires rotated, inflation pressure must be checked and adjusted to the vehicle requirements.*

Rotating your tires at the recommended interval (as indicated in the Scheduled Maintenance chapter) will help your tires wear more evenly, providing better tire performance and longer tire life.

Front-wheel drive vehicles (front tires on the left side of the diagram)

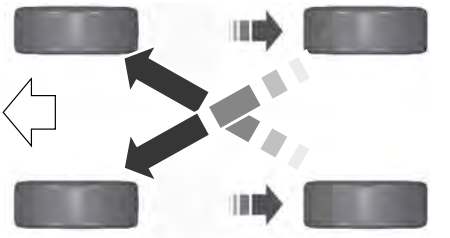

E142547

Information Provided by:
DEALER E-PROCESS

Sometimes irregular tire wear can be corrected by rotating the tires.

USING SUMMER TIRES

Summer tires provide superior performance on wet and dry roads. Summer tires do not have the Mud and Snow (M+S or M/S) tire traction rating on the tire side wall. Since summer tires do not have the same traction performance as All-season or Snow tires, we do not recommend using summer tires when temperatures drop to about 45ºF (7ºC) or below (depending on tire wear and environmental conditions) or in snow and ice conditions. Like any tire, summer tire performance is affected by tire wear and environmental conditions. If you must drive in those conditions, we recommend using Mud and Snow (M+S, M/S), All-season or Snow tires.

Always store your summer tires indoors at temperatures above 19ºF (-7ºC). The rubber compounds used in these tires lose flexibility and may develop surface cracks in the tread area at temperatures below 19ºF (-7ºC). If the tires have been subjected to 19ºF (-7ºC) or less, warm them in a heated space to at least 41ºF (5ºC) for at least 24 hours before installing them on a vehicle, or moving the vehicle with the tires installed, or checking tire inflation. Do not place tires near heaters or heating devices used to warm the room where the tires are stored. Do not apply heat or blow heated air directly on the tires. Always inspect the tires after storage periods and before use.

USING WINTER TIRES

WARNING

When you use winter tires on your vehicle, you must make sure that you use the correct lug nuts.

If winter tires are used, you must make sure that you use the correct tire pressures.

USING SNOW CHAINS

WARNING

Your vehicle is not approved for use with snow chains.

TIRE PRESSURE MONITORING SYSTEM

WARNING

The tire pressure monitoring system is not a substitute for manually checking tire pressure. The tire pressure should be checked periodically (at least monthly) using a tire gauge, see Inflating your tires in this chapter. Failure to properly maintain your tire pressure could increase the risk of tire failure, loss of control, vehicle rollover and personal injury.

Each tire, including the spare (if provided), should be checked monthly when cold and inflated to the inflation pressure recommended by the vehicle manufacturer on the vehicle placard or tire inflation pressure label. (If your vehicle has tires of a different size than the size indicated on the vehicle placard or tire inflation pressure label, you should determine the proper tire inflation pressure for those tires.)

Information Provided by: DEALER E-PROCESS

As an added safety feature, your vehicle has been equipped with a Tire Pressure Monitoring System (TPMS) that illuminates a low tire pressure telltale when one or more of your tires is significantly under-inflated. Accordingly, when the low tire pressure telltale illuminates, you should stop and check your tires as soon as possible, and inflate them to the proper pressure. Driving on a significantly under-inflated tire causes the tire to overheat and can lead to tire failure. Under-inflation also reduces fuel efficiency and tire tread life, and may affect the vehicle's handling and stopping ability.

Please note that the TPMS is not a substitute for proper tire maintenance, and it is the driver's responsibility to maintain correct tire pressure, even if under-inflation has not reached the level to trigger illumination of the TPMS low tire pressure telltale.

Your vehicle has also been equipped with a TPMS malfunction indicator to indicate when the system is not operating properly. The TPMS malfunction indicator is combined with the low tire pressure telltale. When the system detects a malfunction, the telltale will flash for approximately one minute and then remain continuously illuminated. This sequence will continue upon subsequent vehicle start-ups as long as the malfunction exists.

When the malfunction indicator is illuminated, the system may not be able to detect or signal low tire pressure as intended. TPMS malfunctions may occur for a variety of reasons, including the installation of replacement or alternate tires or wheels on the vehicle that prevent the TPMS from functioning properly. Always check the TPMS malfunction telltale after replacing one or more tires or wheels on your vehicle to ensure that the replacement or alternate tires and wheels allow the TPMS to continue to function properly.

The tire pressure monitoring system complies with part 15 of the FCC rules and with RSS-210 of Industry Canada. Operation is subject to the following two conditions: (1) This device may not cause harmful interference, and (2) This device must accept any interference received, including interference that may cause undesired operation.

Changing Tires With a Tire Pressure Monitoring System

E142549

Note: *Each road tire is equipped with a tire pressure sensor located inside the wheel and tire assembly cavity. The pressure sensor is attached to the valve stem. The pressure sensor is covered by the tire and is not visible unless the tire is removed. Take care when changing the tire to avoid damaging the sensor*

You should always have your tires serviced by an authorized dealer.

Check the tire pressure periodically (at least monthly) using an accurate tire gauge. See Inflating Your Tires in this chapter.

Information Provided by:
DEALER E-PROCESS

Understanding Your Tire Pressure Monitoring System

The tire pressure monitoring system measures pressure in your four road tires and sends the tire pressure readings to your vehicle. The low tire pressure warning light will turn on if the tire pressure is significantly low. Once the light is illuminated, your tires are under-inflated and need to be inflated to the manufacturer's recommended tire pressure. Even if the light turns on and a short time later turns off, your tire pressure still needs to be checked.

When Your Temporary Spare Tire is Installed

When one of your road tires needs to be replaced with the temporary spare, the system will continue to identify an issue to remind you that the damaged road wheel and tire assembly needs to be repaired and put back on your vehicle.

To restore the full function of the tire pressure monitoring system, have the damaged road wheel and tire assembly repaired and remounted on your vehicle.

When You Believe Your System is Not Operating Properly

The main function of the tire pressure monitoring system is to warn you when your tires need air. It can also warn you in the event the system is no longer capable of functioning as intended. See the following chart for information concerning your tire pressure monitoring system:

Information Provided by:
DEALER E-PROCESS

Low tire pressure warning light	Possible cause	Customer action required
Solid warning light	Tire(s) under-inflated	Make sure tires are at the proper pressure. See Inflating your tires in this chapter. After inflating your tires to the manufacturer's recommended pressure as shown on the Tire Label (located on the edge of driver's door or the B-Pillar), the vehicle must be driven for at least two minutes over 20 mph (32 km/h) before the light turns off.
	Spare tire in use	Repair the damaged road wheel and tire assembly and reinstall it on the vehicle to restore system function. For a description on how the system functions, see **When your temporary spare tire is installed** in this section.
	TPMS malfunction	If the tires are properly inflated and the spare tire is not in use but the light remains on, contact your authorized dealer as soon as possible.
Flashing warning light	Spare tire in use	Repair the damaged road wheel and tire assembly and reinstall it on the vehicle to restore system function. For a description on how the system functions, see **When your temporary spare tire is installed** in this section.
	TPMS malfunction	If the tires are properly inflated and the spare tire is not in use but the light remains on, contact your authorized dealer as soon as possible.

When Inflating Your Tires

When putting air into your tires (such as at a gas station or in your garage), the tire pressure monitoring system may not respond immediately to the air added to your tires.

It may take up to two minutes of driving over 20 mph (32 km/h) for the light to turn off after you have filled your tires to the recommended inflation pressure

Information Provided by:
DEALER E-PROCESS

How Temperature Affects Your Tire Pressure

The tire pressure monitoring system monitors tire pressure in each pneumatic tire. While driving in a normal manner, a typical passenger tire inflation pressure may increase about 2 to 4 psi (14 to 28 kPa) from a cold start situation. If the vehicle is stationary overnight with the outside temperature significantly lower than the daytime temperature, the tire pressure may decrease about 3 psi (21 kPa) for a drop of 30ºF (17ºC) in ambient temperature. This lower pressure value may be detected by the tire pressure monitoring system as being significantly lower than the recommended inflation pressure and activate the system warning light for low tire pressure. If the low tire pressure warning light is on, visually check each tire to verify that no tire is flat. If one or more tires are flat, repair as necessary. Check the air pressure in the road tires. If any tire is under-inflated, carefully drive the vehicle to the nearest location where air can be added to the tires. Inflate all the tires to the recommended inflation pressure.

CHANGING A ROAD WHEEL

WARNINGS

The use of tire sealants may damage your tire pressure monitoring system and should only be used in roadside emergencies. If you must use a sealant, the Ford Tire Mobility Kit sealant should be used. The tire pressure monitoring system sensor and valve stem on the wheel must be replaced by an authorized dealer after use of the sealant.

See **Tire Pressure Monitoring System** (page 225). If the tire pressure monitor sensor becomes damaged, it will no longer function.

Note: *The tire pressure monitoring system indicator light will illuminate when the spare tire is in use. To restore the full functionality of the monitoring system, all road wheels equipped with tire pressure monitoring sensors must be mounted on the vehicle.*

If you get a flat tire while driving, do not apply the brake heavily. Instead, gradually decrease your speed. Hold the steering wheel firmly and slowly move to a safe place on the side of the road.

Have a flat serviced by an authorized dealer in order to prevent damage to the tire pressure monitoring system sensors. See **Tire Pressure Monitoring System** (page 225). Replace the spare tire with a road tire as soon as possible. During repairing or replacing of the flat tire, have an authorized dealer inspect the tire pressure monitoring system sensor for damage.

Dissimilar Spare Wheel and Tire Assembly Information

WARNING

Failure to follow these guidelines could result in an increased risk of loss of vehicle control, injury or death.

If you have a dissimilar spare wheel and tire, then it is intended for temporary use only. This means that if you need to use it, you should replace it as soon as possible with a road wheel and tire assembly that is the same size and type as the road tires and wheels that were originally provided by Ford. If the dissimilar spare tire or wheel is damaged, it should be replaced rather than repaired.

A dissimilar spare wheel and tire assembly is defined as a spare wheel and tire assembly that is different in brand, size or appearance from the road tires and wheels and can be one of three types:

Information Provided by: DEALER E-PROCESS

1. **T-type mini-spare:** This spare tire begins with the letter T for tire size and may have Temporary Use Only molded in the sidewall.

2. **Full-size dissimilar spare with label on wheel:** This spare tire has a label on the wheel that states: THIS WHEEL AND TIRE ASSEMBLY FOR TEMPORARY USE ONLY.

When driving with one of the dissimilar spare tires listed above, do not:

- Exceed 50 mph (80 km/h).
- Load the vehicle beyond maximum vehicle load rating listed on the Safety Compliance Label.
- Tow a trailer.
- Use more than one dissimilar spare tire at a time.
- Use commercial car washing equipment.
- Try to repair the dissimilar spare tire.

Use of one of the dissimilar spare tires listed above at any one wheel location can lead to impairment of the following:

- Handling, stability and braking performance.
- Comfort and noise.
- Ground clearance and parking at curbs.
- Winter weather driving capability.
- Wet weather driving capability.
- All-wheel driving capability (if applicable).

3. **Full-size dissimilar spare without label on wheel**

When driving with the full-size dissimilar spare wheel and tire assembly, do not:

- Exceed 70 mph (113 km/h).
- Use more than one dissimilar spare wheel and tire assembly at a time.
- Use commercial car washing equipment.

The usage of a full-size dissimilar spare wheel and tire assembly can lead to impairment of the following:

- Handling, stability and braking performance.
- Comfort and noise.
- Ground clearance and parking at curbs.
- Winter weather driving capability.
- Wet weather driving capability.
- All-wheel driving capability.

When driving with the full-size dissimilar spare wheel and tire assembly additional caution should be given to:

- Towing a trailer.
- Driving vehicles equipped with a camper body.
- Driving vehicles with a load on the cargo rack.

Drive cautiously when using a full-size dissimilar spare wheel and tire assembly and seek service as soon as possible.

Tire Change Procedure

WARNINGS

When one of the front wheels is off the ground, the transmission alone will not prevent the vehicle from moving or slipping off the jack, even if the transmission selector lever is in park (P).

To help prevent your vehicle from moving when you change a tire, be sure to place the transmission selector lever in park (P), set the parking brake and block (in both directions) the wheel that is diagonally opposite (other side and end of the vehicle) to the tire being changed.

Never get underneath a vehicle that is supported only by a jack. If your vehicle slips off the jack, you or someone else could be seriously injured.

Information Provided by: DEALER E-PROCESS

WARNINGS

Do not attempt to change a tire on the side of the vehicle close to moving traffic. Pull far enough off the road to avoid the danger of being hit when operating the jack or changing the wheel.

Always use the jack provided as original equipment with your vehicle. If using a jack other than the one provided as original equipment with your vehicle, make sure the jack capacity is adequate for the vehicle weight, including any vehicle cargo or modifications.

Make sure there is no lubrication (grease or oil) on the threads or the surface between the wheel lugs and nuts. This can cause the lug nuts to loosen while driving.

Note: *Passengers should not remain in the vehicle when the vehicle is being jacked.*

1. Park on a level surface, set the parking brake and activate the hazard flashers.
2. Place the transmission in park (P) (automatic transmission) or reverse (R) (manual transmission) and turn the engine off.
3. Remove the carpeted wheel cover.
4. Remove the spare tire bolt securing the spare tire by turning it counterclockwise.
5. Remove the spare tire from the spare tire compartment.
6. Remove the retaining bolt securing the jack by turning it counterclockwise.
7. Remove the jack.

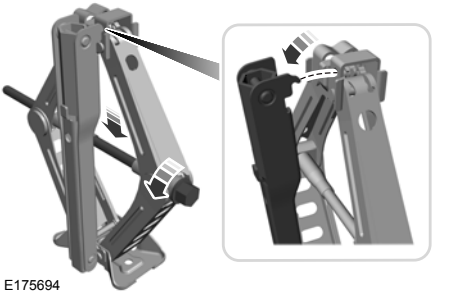

E175694

8. To remove the wrench from the jack, turn the hex nut on the jack counterclockwise. This will lower the jack and loosen the mechanical lock.

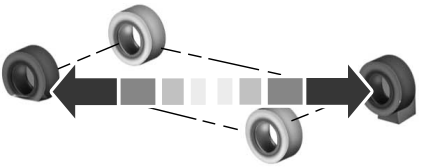

E142551

9. Block the diagonally opposite wheel.
10. Loosen each wheel lug nut one-half turn counterclockwise but do not remove them until the wheel is raised off the ground.

Note: *Jack at the specified locations to avoid damage to the vehicle.*

11. The vehicle jacking points are shown here, and are depicted on the yellow warning label on the jack.

Information Provided by: DEALER E-PROCESS

E145908

12. Indentations in the sills show the location of the jacking points.

E142553

13. Remove the lug nuts with the lug wrench.
14. Replace the flat tire with the spare tire, making sure the valve stem is facing outward. Reinstall the lug nuts until the wheel is snug against the hub. Do not fully tighten the lug nuts until the wheel has been lowered.
15. Lower the wheel by turning the jack handle counterclockwise.

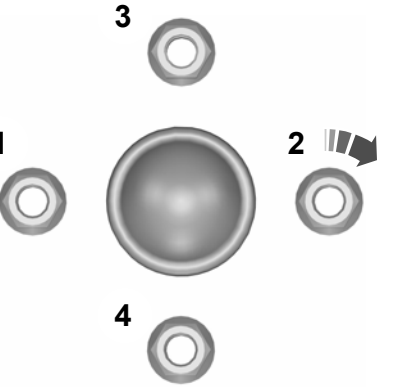

E90589

16. Remove the jack and fully tighten the lug nuts in the order shown. See **Technical Specifications** (page 233).

Stowing the Flat Tire

The full-size road wheel can be stowed in the spare tire compartment.

1. Lift the carpeted wheel cover at an angle to access the spare tire compartment.
2. Place the wheel in the spare tire well with the valve stem facing down. Use the mini-spare bolt to secure the wheel.
3. Place the jack and tools back into the spare tire compartment.
4. Replace the carpeted wheel cover.

Information Provided by:
DEALER E-PROCESS

TECHNICAL SPECIFICATIONS

Wheel Lug Nut Torque Specifications

WARNING

When a wheel is installed, always remove any corrosion, dirt or foreign materials present on the mounting surfaces of the wheel or the surface of the wheel hub, brake drum or brake disc that contacts the wheel. Make sure that any fasteners that attach the rotor to the hub are secured so they do not interfere with the mounting surfaces of the wheel. Installing wheels without correct metal-to-metal contact at the wheel mounting surfaces can cause the wheel nuts to loosen and the wheel to come off while your vehicle is in motion, resulting in loss of control.

Bolt size	lb-ft (Nm)*
M12 x 1.5	100 (135)

*Torque specifications are for nut and bolt threads free of dirt and rust. Use only Ford recommended replacement fasteners.

Retighten the lug nuts to the specified torque within 100 miles (160 kilometers) after any wheel disturbance (such as tire rotation, changing a flat tire, wheel removal).

E145950

A Wheel pilot bore

Inspect the wheel pilot bore and mounting surface prior to installation. Remove any visible corrosion or loose particles.

Information Provided by:
DEALER E-PROCESS

ENGINE SPECIFICATIONS

Engine	1.0L EcoBoost	1.6L Duratec-16V Ti-VCT	1.6L EcoBoost
Cubic inches	61	98	98
Required fuel	Minimum 87 octane	Minimum 87 octane	Minimum 87 octane
Compression ratio	10:1	11:1	10:1
Spark plug gap	0.026–0.030 in (0.65–0.75 mm)	0.028–0.031 in (0.7–0.8 mm)	0.028–0.031 in (0.7–0.8 mm)

Drivebelt Routing

1.0L EcoBoost

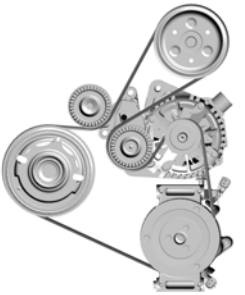

E163197

1.6L Duratec-16V Ti-VCT

E163198

1.6L EcoBoost

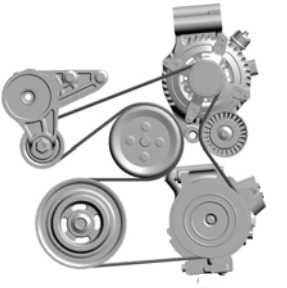

E161372

Information Provided by:
DEALER E-PROCESS

MOTORCRAFT PARTS

Component	1.0L EcoBoost	1.6L Duratec-16V Ti-VCT	1.6L EcoBoost
Air filter element[1]	FA-1914		
Oil filter[2]	FL-910S		
Battery	BXT-96R-500		
Spark plugs[3]	SP-538A	SP-525	SP-532
Cabin air filter	FP-69		
Windshield wiper blade	WW-2430 (driver side) WW-1613 (passenger side) WW-1204 (rear)		

We recommend Motorcraft replacement parts available at your Ford dealer or at fordparts.com for scheduled maintenance. These parts meet or exceed Ford Motor Company's specifications and are engineered for your vehicle. Use of other parts may impact vehicle performance, emissions and durability. Your warranty may be void for any damage related to use of other parts.

If a Motorcraft oil filter is not available, use an oil filter that meets industry performance specification SAE/USCAR-36.

For spark plug replacement, contact an authorized dealer. Replace the spark plugs at the appropriate intervals. See **Normal Scheduled Maintenance** (page 319).

Information Provided by:
DEALER E-PROCESS

VEHICLE IDENTIFICATION NUMBER

The vehicle identification number is located on the left-hand side of the instrument panel.

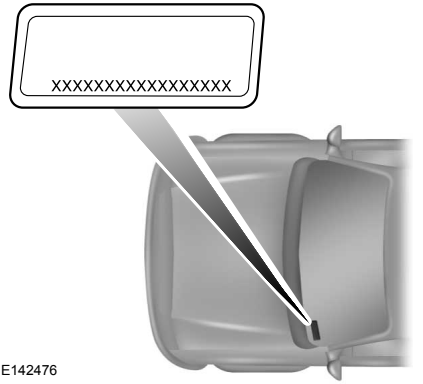

E142476

Please note that in the graphic, XXXX is representative of your vehicle identification number.

The Vehicle Identification Number contains the following information:

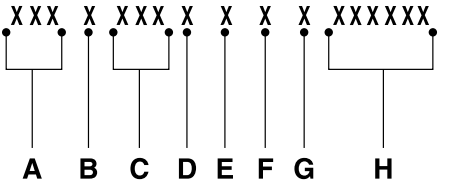

E142477

A	World manufacturer identifier
B	Brake system, Gross Vehicle Weight Rating, Restraint Devices and their locations
C	Make, vehicle line, series, body type
D	Engine type
E	Check digit
F	Model year
G	Assembly plant
H	Production sequence number

Information Provided by:
DEALER E-PROCESS

VEHICLE CERTIFICATION LABEL

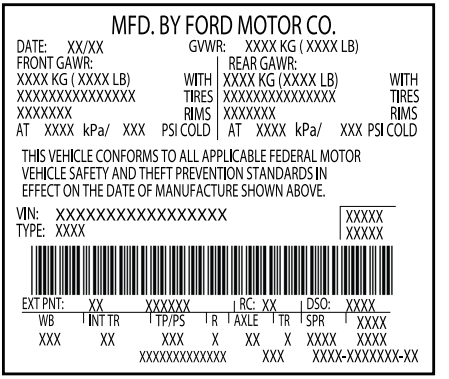

E167469

The National Highway Traffic Safety Administration Regulations require that a Safety Compliance Certification Label be affixed to a vehicle and prescribe where the Safety Compliance Certification Label may be located. The Safety Compliance Certification Label shall be affixed to either the door hinge pillar, the door latch post, or the edge of the door near the door latch, next to the driver's seating position.

TRANSMISSION CODE DESIGNATION

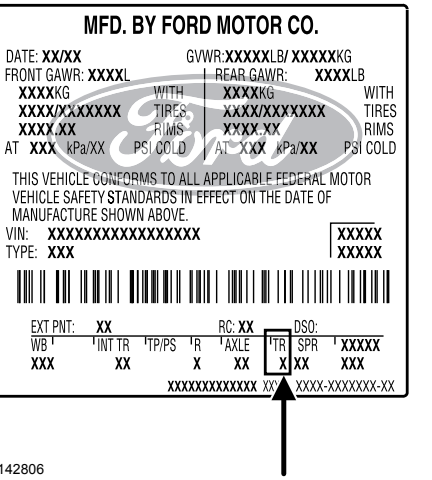

E142806

The transmission code is on the Safety Compliance Certification Label. The following table shows the transmission code along with the transmission description.

Description	Code
Six-speed automatic transmission	A
Six-speed manual transmission	M
Five-speed manual transmission	C

Information Provided by:
DEALER E-PROCESS

CAPACITIES AND SPECIFICATIONS - 1.0L ECOBOOST™

Capacities

WARNING

The air conditioning refrigerant system contains refrigerant R-134a under high pressure. Opening the air conditioning refrigerant system can cause personal injury. Have the air conditioning refrigerant system serviced only by qualified personnel.

Item	Capacity
Engine oil	4.3 qt (4.1 L)
Engine coolant	6.1 qt (5.8 L)
Brake fluid	Between MIN and MAX on brake fluid reservoir
Manual transmission fluid (ib5)	2.2 qt (2.1 L)*
Windshield washer fluid	Fill as required
Fuel tank	12.4 gal (47 L)
A/C refrigerant	24.0 oz (0.68 kg)
A/C refrigerant compressor oil	4.2 fl oz (125 ml)

* Approximate dry fill capacity. Actual amount may vary during fluid changes.

Specifications

Materials

Name	Specification
Recommended motor oil (U.S.): Motorcraft SAE 5W-20 Premium Synthetic Blend Motor Oil XO-5W20-QSP	WSS-M2C945-A
Recommended motor oil (Canada): Motorcraft SAE 5W-20 Super Premium Motor Oil CXO-5W20-LSP12	WSS-M2C945-A
Recommended motor oil (Mexico): Motorcraft SAE 5W-20 Synthetic Motor Oil MXO-5W20-QSP	WSS-M2C945-A
Optional motor oil (U.S. and Mexico):	WSS-M2C945-A

Information Provided by: DEALER E-PROCESS

Name	Specification
Motorcraft SAE 5W-20 Full Synthetic Motor Oil XO-5W20-QFS	
Optional motor oil (Canada): Motorcraft SAE 5W-20 Synthetic Motor Oil CXO-5W20-LFS12	WSS-M2C945-A
Engine coolant (U.S. and Mexico): Motorcraft Orange Antifreeze/Coolant Prediluted VC-3DIL-B	WSS-M97B44-D2
Engine coolant (Canada): Motorcraft Orange Antifreeze/Coolant Prediluted CVC-3DIL-B	WSS-M97B44-D2
Brake fluid: Motorcraft DOT 4 Low Viscosity (LV) High Performance PM-20	WSS-M6C65-A2
Manual transmission fluid: Motorcraft Full Synthetic Manual Transmission Fluid XT-M5-QS	WSD-M2C200-C
Windshield washer fluid (U.S. and Mexico): Motorcraft Premium Windshield Wash Concentrate with Bitterant ZC-32-B2	WSS-M14P19-A
Windshield washer fluid (Canada): Motorcraft Premium Quality Windshield Washer Fluid CXC-37-(A, B, D, F)	WSS-M14P19-A
A/C refrigerant (U.S.): Motorcraft R-134a Refrigerant YN-19	WSH-M17B19-A
A/C refrigerant (Canada): Motorcraft R-134a Refrigerant CYN-16-R	WSH-M17B19-A
A/C refrigerant (Mexico): Motorcraft R-134a Refrigerant MYN-19	WSH-M17B19-A
A/C refrigerant compressor oil: Motorcraft PAG Refrigerant Compressor Oil YN-12-D	WSH-M1C231-B
Multi-purpose grease:	CRCSL3151ESB

Information Provided by:
DEALER E-PROCESS

Name	Specification
Motorcraft Multi-Purpose Grease Spray XL-5	ESB-M1C93-B
Lock cylinders (U.S.): Penetrating and Lock Lubricant XL-1	--
Lock cylinders (Canada): Penetrating Fluid CXC-51-A	--
Lock cylinders (Mexico): Penetrating and Lock Lubricant MXL-1	--

If you use oil and fluids that do not meet the defined specification and viscosity grade, this may lead to:

- Component damage which is not covered by the vehicle warranty.
- Longer engine cranking periods.
- Increased emission levels.
- Reduced engine performance.
- Reduced fuel economy.
- Degraded brake performance.

We recommend Motorcraft motor oil for your vehicle. If Motorcraft oil is not available, use motor oils of the recommended viscosity grade that meet API SN requirements and display the API Certification Mark for gasoline engines. Do not use oil labeled with API SN service category unless the label also displays the API certification mark.

E142732

An oil that displays this symbol conforms to current engine, emission system and fuel economy performance standards of the International Lubricants Specification Advisory Council (ILSAC).

Do not use supplemental engine oil additives because they are unnecessary and could lead to engine damage that may not be covered by your vehicle warranty.

Information Provided by:
DEALER E-PROCESS

Note: *Ford recommends using Motorcraft DOT 4 Low Viscosity (LV) High Performance or equivalent meeting WSS-M6C65-A2. Use of any fluid other than the recommended fluid may cause degraded brake performance and not meet the Ford performance standards. Keep brake fluid clean and dry. Contamination with dirt, water, petroleum products or other materials may result in brake system damage and possible failure.*

CAPACITIES AND SPECIFICATIONS - 1.6L ECOBOOST™

Capacities

WARNING

The air conditioning refrigerant system contains refrigerant R-134a under high pressure. Opening the air conditioning refrigerant system can cause personal injury. Have the air conditioning refrigerant system serviced only by qualified personnel.

Item	Capacity
Engine oil	4.3 qt (4.1 L)
Engine coolant	6.1 qt (5.8 L)
Brake fluid	Between MIN and MAX on brake fluid reservoir
Manual transmission fluid (B6)	1.7 qt (1.6 L)*
Windshield washer fluid	Fill as required
Fuel tank	12.4 gal (47 L)
A/C refrigerant	24.0 oz (0.68 kg)
A/C refrigerant compressor oil	5.1 fl oz (150 ml)

* Approximate dry fill capacity. Actual amount may vary during fluid changes.

Information Provided by: DEALER E-PROCESS

Specifications

Materials

Name	Specification
Recommended motor oil (U.S.): Motorcraft SAE 5W-20 Premium Synthetic Blend Motor Oil XO-5W20-QSP	WSS-M2C945-A
Recommended motor oil (Canada): Motorcraft SAE 5W-20 Super Premium Motor Oil CXO-5W20-LSP12	WSS-M2C945-A
Recommended motor oil (Mexico): Motorcraft SAE 5W-20 Synthetic Motor Oil MXO-5W20-QSP	WSS-M2C945-A
Optional motor oil (U.S. and Mexico): Motorcraft SAE 5W-20 Full Synthetic Motor Oil XO-5W20-QFS	WSS-M2C945-A
Optional motor oil (Canada): Motorcraft SAE 5W-20 Synthetic Motor Oil CXO-5W20-LFS12	WSS-M2C945-A
Engine coolant (U.S. and Mexico): Motorcraft Orange Antifreeze/Coolant Prediluted VC-3DIL-B	WSS-M97B44-D2
Engine coolant (Canada): Motorcraft Orange Antifreeze/Coolant Prediluted CVC-3DIL-B	WSS-M97B44-D2
Brake fluid: Motorcraft DOT 4 Low Viscosity (LV) High Performance PM-20	WSS-M6C65-A2
Manual transmission fluid: Motorcraft Dual Clutch Transmission Fluid XT-11-QDC	WSS-M2C200-D2
Windshield washer fluid (U.S. and Mexico): Motorcraft Premium Windshield Wash Concentrate with Bitterant ZC-32-B2	WSS-M14P19-A
Windshield washer fluid (Canada): Motorcraft Premium Quality Windshield Washer Fluid CXC-37-(A, B, D, F)	WSS-M14P19-A

Information Provided by:
DEALER E-PROCESS

Name	Specification
A/C refrigerant (U.S.): Motorcraft R-134a Refrigerant YN-19	WSH-M17B19-A
A/C refrigerant (Canada): Motorcraft R-134a Refrigerant CYN-16-R	WSH-M17B19-A
A/C refrigerant (Mexico): Motorcraft R-134a Refrigerant MYN-19	WSH-M17B19-A
A/C refrigerant compressor oil: Motorcraft PAG Refrigerant Compressor Oil YN-12-D	WSH-M1C231-B
Multi-purpose grease: Motorcraft Multi-Purpose Grease Spray XL-5	CRCSL3151ESB ESB-M1C93-B
Lock cylinders (U.S.): Penetrating and Lock Lubricant XL-1	--
Lock cylinders (Canada): Penetrating Fluid CXC-51-A	--
Lock cylinders (Mexico): Penetrating and Lock Lubricant MXL-1	--

If you use oil and fluids that do not meet the defined specification and viscosity grade, this may lead to:

- Component damage which is not covered by the vehicle warranty.
- Longer engine cranking periods.
- Increased emission levels.
- Reduced engine performance.
- Reduced fuel economy.
- Degraded brake performance.

We recommend Motorcraft motor oil for your vehicle. If Motorcraft oil is not available, use motor oils of the recommended viscosity grade that meet API SN requirements and display the API Certification Mark for gasoline engines. Do not use oil labeled with API SN service category unless the label also displays the API certification mark.

Information Provided by:
DEALER E-PROCESS

E142732

An oil that displays this symbol conforms to current engine, emission system and fuel economy performance standards of the International Lubricants Specification Advisory Council (ILSAC).

Do not use supplemental engine oil additives because they are unnecessary and could lead to engine damage that may not be covered by your vehicle warranty.

Note: *Ford recommends using Motorcraft DOT 4 Low Viscosity (LV) High Performance or equivalent meeting WSS-M6C65-A2. Use of any fluid other than the recommended fluid may cause degraded brake performance and not meet the Ford performance standards. Keep brake fluid clean and dry. Contamination with dirt, water, petroleum products or other materials may result in brake system damage and possible failure.*

CAPACITIES AND SPECIFICATIONS - 1.6L DURATEC-16V TI-VCT (SIGMA)

Capacities

WARNING

The air conditioning refrigerant system contains refrigerant R-134a under high pressure. Opening the air conditioning refrigerant system can cause personal injury. Have the air conditioning refrigerant system serviced only by qualified personnel.

Item	Capacity
Engine oil	4.3 qt (4.1 L)
Engine coolant	6.1 qt (5.8 L)
Brake fluid	Between MIN and MAX on brake fluid reservoir
Automatic transmission fluid (DPS6)	1.8 qt (1.7 L)*
Manual transmission fluid (ib5)	2.2 qt (2.1 L)*
Windshield washer fluid	Fill as required
Fuel tank	12.4 gal (47 L)

Information Provided by:
DEALER E-PROCESS

Item	Capacity
A/C refrigerant	21.2 oz (0.6 kg)
A/C refrigerant compressor oil	5.1 fl oz (150 ml)

* Approximate dry fill capacity. Actual amount may vary during fluid changes.

Specifications

Materials

Name	Specification
Recommended motor oil (U.S.): Motorcraft SAE 5W-20 Premium Synthetic Blend Motor Oil XO-5W20-QSP	WSS-M2C945-A
Recommended motor oil (Canada): Motorcraft SAE 5W-20 Super Premium Motor Oil CXO-5W20-LSP12	WSS-M2C945-A
Recommended motor oil (Mexico): Motorcraft SAE 5W-20 Synthetic Motor Oil MXO-5W20-QSP	WSS-M2C945-A
Optional motor oil (U.S. and Mexico): Motorcraft SAE 5W-20 Full Synthetic Motor Oil XO-5W20-QFS	WSS-M2C945-A
Optional motor oil (Canada): Motorcraft SAE 5W-20 Synthetic Motor Oil CXO-5W20-LFS12	WSS-M2C945-A
Engine coolant (U.S. and Mexico): Motorcraft Orange Antifreeze/Coolant Prediluted VC-3DIL-B	WSS-M97B44-D2
Engine coolant (Canada): Motorcraft Orange Antifreeze/Coolant Prediluted CVC-3DIL-B	WSS-M97B44-D2
Brake fluid: Motorcraft DOT 4 Low Viscosity (LV) High Performance PM-20	WSS-M6C65-A2
Automatic transmission fluid: Motorcraft Dual Clutch Transmission Fluid XT-11-QDC	WSS-M2C200-D2

Information Provided by:
DEALER E-PROCESS

Name	Specification
Manual transmission fluid: Motorcraft Full Synthetic Manual Transmission Fluid XT-M5-QS	WSD-M2C200-C
Windshield washer fluid (U.S. and Mexico): Motorcraft Premium Windshield Wash Concentrate with Bitterant ZC-32-B2	WSS-M14P19-A
Windshield washer fluid (Canada): Motorcraft Premium Quality Windshield Washer Fluid CXC-37-(A, B, D, F)	WSS-M14P19-A
A/C refrigerant (U.S.): Motorcraft R-134a Refrigerant YN-19	WSH-M17B19-A
A/C refrigerant (Canada): Motorcraft R-134a Refrigerant CYN-16-R	WSH-M17B19-A
A/C refrigerant (Mexico): Motorcraft R-134a Refrigerant MYN-19	WSH-M17B19-A
A/C refrigerant compressor oil: Motorcraft PAG Refrigerant Compressor Oil YN-12-D	WSH-M1C231-B
Multi-purpose grease: Motorcraft Multi-Purpose Grease Spray XL-5	CRCSL3151ESB ESB-M1C93-B
Lock cylinders (U.S.): Penetrating and Lock Lubricant XL-1	--
Lock cylinders (Canada): Penetrating Fluid CXC-51-A	--
Lock cylinders (Mexico): Penetrating and Lock Lubricant MXL-1	--

Information Provided by:
DEALER E-PROCESS

If you use oil and fluids that do not meet the defined specification and viscosity grade, this may lead to:

- Component damage which is not covered by the vehicle warranty.
- Longer engine cranking periods.
- Increased emission levels.
- Reduced engine performance.
- Reduced fuel economy.
- Degraded brake performance.

We recommend Motorcraft motor oil for your vehicle. If Motorcraft oil is not available, use motor oils of the recommended viscosity grade that meet API SN requirements and display the API Certification Mark for gasoline engines. Do not use oil labeled with API SN service category unless the label also displays the API certification mark.

E142732

An oil that displays this symbol conforms to current engine, emission system and fuel economy performance standards of the International Lubricants Specification Advisory Council (ILSAC).

Do not use supplemental engine oil additives because they are unnecessary and could lead to engine damage that may not be covered by your vehicle warranty.

Note: *Ford recommends using Motorcraft DOT 4 Low Viscosity (LV) High Performance or equivalent meeting WSS-M6C65-A2. Use of any fluid other than the recommended fluid may cause degraded brake performance and not meet the Ford performance standards. Keep brake fluid clean and dry. Contamination with dirt, water, petroleum products or other materials may result in brake system damage and possible failure.*

Information Provided by:
DEALER E-PROCESS

GENERAL INFORMATION

Radio Frequencies and Reception Factors

Radio reception factors	
Distance and Strength	The further you travel away from an FM station, the weaker the signal and the weaker the reception.
Terrain	Hills, mountains, tall buildings, bridges, tunnels, freeway overpasses, parking garages, dense tree foliage and thunderstorms can interfere with the reception.
Station overload	When you pass near a radio transmission tower, a stronger signal can override a weaker signal and can cause interference in the audio system.

CD and CD Player Information

Note: *CD units play commercially pressed 4.75-inch (12 centimeter) audio compact discs only. Due to technical incompatibility, certain recordable and re-recordable compact discs may not function correctly when used in Ford CD players.*

Note: *Do not insert CDs with homemade paper (adhesive) labels into the CD player as the label may peel and cause the CD to become jammed. You should use a permanent felt tip marker rather than adhesive labels on your homemade CDs. Ballpoint pens may damage CDs. Please contact an authorized dealer for further information.*

Note: *Do not use any irregularly shaped discs or discs with a scratch protection film attached.*

Always handle discs by their edges only. Clean the disc with an approved CD cleaner only. Wipe it from the center of the disc toward the edge. Do not clean in a circular motion.

Do not expose discs to direct sunlight or heat sources for extended periods.

MP3 and WMA Track and Folder Structure

Audio systems capable of recognizing and playing MP3 and WMA individual tracks and folder structures work as follows:

- There are two different modes for MP3 and WMA disc playback: MP3 and WMA track mode (system default) and MP3 and WMA folder mode.
- MP3 and WMA track mode ignores any folder structure on the MP3 and WMA disc. The player numbers each MP3 and WMA track on the disc (noted by the MP3 or WMA file extension) from T001 to a maximum of T255. The maximum number of playable MP3 and WMA files may be less depending on the structure of the CD and exact model of radio present.

Information Provided by: DEALER E-PROCESS

- MP3 and WMA folder mode represents a folder structure consisting of one level of folders. The CD player numbers all MP3 and WMA tracks on the disc (noted by the MP3 or WMA file extension) and all folders containing MP3 and WMA files, from F001 (folder) T001 (track) to F253 T255.
- Creating discs with only one level of folders helps with navigation through the disc files.

If you are burning your own MP3 and WMA discs, it is important to understand how the system reads the structures you create. While various files may be present, (files with extensions other than MP3 and WMA), only files with the MP3 and WMA extension are played; other files are ignored by the system. This enables you to use the same MP3 and WMA disc for a variety of tasks on your work computer, home computer and your in-vehicle system.

In track mode, the system displays and plays the structure as if it were only one level deep (all MP3 and WMA files play, regardless of being in a specific folder). In folder mode, the system only plays the MP3 and WMA files in the current folder.

AUDIO UNIT - VEHICLES WITH: AM/FM/CD

WARNING

Driving while distracted can result in loss of vehicle control, crash and injury. We strongly recommend that you use extreme caution when using any device that may take your focus off the road. Your primary responsibility is the safe operation of your vehicle. We recommend against the use of any hand-held device while driving and encourage the use of voice-operated systems when possible. Make sure you are aware of all applicable local laws that may affect the use of electronic devices while driving.

Information Provided by: DEALER E-PROCESS

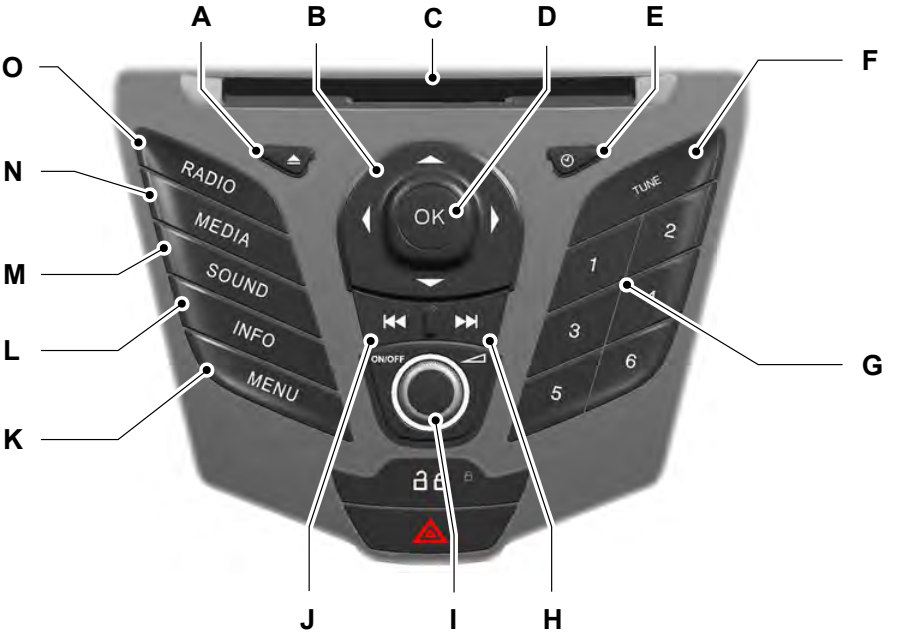

E156613

A **Eject:** Press the button to eject a CD.

B **Cursor arrows:** Press a button to scroll through on-screen choices.

C **CD slot:** Where you insert a CD.

D **OK:** Press the button to confirm on-screen selections.

E **Clock:** Press to set the time. Use the **H** and **M** buttons outside the audio display to adjust the hours and minutes. Press **OK** to finish. (The clock can also be set by pressing **MENU**, then scrolling to the clock settings menu.)

F **Tune:** Press the button to manual tune on AM and FM wavebands.

G **Numeric keypad:** Press the button to recall a previously stored station. To store a favorite station press and hold until the sound returns.

H **Seek up:** Press the button to go to the next station up the radio frequency band or the next track on a CD.

Information Provided by:
DEALER E-PROCESS

I **On, Off and Volume:** Press the button to switch the audio system on or off. Turn the dial to adjust the volume.

J **Seek down:** Press the button to go to the next station down the radio frequency band or the previous track on a CD.

K **MENU:** Press the button to access different audio system features.

L **INFO:** Press the button to access radio or CD information.

M **SOUND:** Press the button to adjust the sound settings for bass, treble, middle, balance and fade.

N **MEDIA:** Press the button to access the AUX and SYNC features, it will also cancel the menu or list browsing.

O **RADIO:** Press the button to select different radio bands, it will also cancel the menu or list browsing.

Sound Button

This will allow you to adjust the sound settings (for example bass, middle and treble).

1. Press the **SOUND** button.
2. Use the up and down arrow buttons to select the required setting.
3. Use the left and right arrow buttons to make the necessary adjustment. The display indicates the level selected.
4. Press the **OK** button to confirm the new settings.

Waveband Button

Press the **RADIO** button to select from the wavebands available.

You can use the selector to return to radio reception when you have been listening to another source.

Alternatively, press the left arrow button to display the available wavebands. Scroll to the required waveband and press **OK**.

Station Tuning Control

Seek Tuning

Select a waveband and briefly press one of the seek buttons. The unit will stop at the first station it finds in the direction you have chosen.

Manual Tuning

1. Press the **MENU** button.
2. Select **RADIO** mode and then **Manual**.
3. Use the left and right arrow buttons to tune down or up the waveband in small increments or press and hold to increment quickly, until you find a station you want to listen to.
4. Press **OK** to continue listening to a station.

Scan Tuning

Scan allows you to listen to a few seconds of each station detected.

1. Press the **MENU** button.
2. Select **RADIO** mode and then **Scan**.
3. Use the seek buttons to scan up or down the selected waveband.

Information Provided by: DEALER E-PROCESS

4. Press **OK** to continue listening to a station.

Station Preset Buttons

This feature allows you to store your favorite stations, they can be recalled by selecting the appropriate waveband and pressing one of the preset buttons.

1. Select a waveband.
2. Tune to the station required.
3. Press and hold one of the preset buttons. A progress bar and message will appear. When the progress bar completes the station has been stored. The audio unit will also mute momentarily as confirmation.

You can repeat this on each waveband and for each preset button.

Note: *When you drive to another part of the country, stations that broadcast on alternative frequencies and are stored on preset buttons, may be updated with the correct frequency and station name for that area.*

Autostore Control

Note: *This will store up to a maximum of the six strongest signals available, either from the AM or the FM waveband and overwrite the previously stored stations. You can also store stations manually in the same way as other wavebands.*

- Press and hold the **RADIO** button.
- When the search is complete, sound is restored and the strongest signals are stored on the autostore presets.

Automatic Volume Control

When available, automatic volume control adjusts the volume level to compensate for engine noise and road speed noise.

1. Press the **MENU** button and select **Audio Settings**.
2. Select **Spd. Comp. Vol**.
3. Use the left or right arrow button to adjust the setting.
4. Press the **OK** button to confirm your selection.
5. Press the **MENU** button to return.

Alternative Frequencies

The majority of programs that broadcast on the FM waveband have a program identification code that can be recognized by audio units.

When your vehicle moves from one transmission area to another with the alternative frequencies tuning switched on, this function will search for the strongest station signal.

Under certain conditions, alternative frequencies tuning may temporarily disrupt normal reception.

When selected, the unit continually evaluates signal strength and if a better signal becomes available, the unit will switch to that alternative. It mutes while it checks a list of alternative frequencies and if necessary, it will search once across the selected waveband for a genuine alternative frequency.

It will restore radio reception when it finds one or if one is not found, the unit will return to the original stored frequency.

When selected, **AF** will be shown in the display.

1. Press the **MENU** button.
2. Select **Audio Settings**.
3. Scroll to **Alternat. freq.** or **Alt. Frequency** and turn on or off with the **OK** button.
4. Press the **MENU** button to return.

Information Provided by:
DEALER E-PROCESS

AUDIO UNIT - VEHICLES WITH: AM/FM/CD/SYNC

WARNING

Driving while distracted can result in loss of vehicle control, crash and injury. We strongly recommend that you use extreme caution when using any device that may take your focus off the road. Your primary responsibility is the safe operation of your vehicle. We recommend against the use of any hand-held device while driving and encourage the use of voice-operated systems when possible. Make sure you are aware of all applicable local laws that may affect the use of electronic devices while driving.

Note: *An integrated multi function display is situated above the unit. This shows important information regarding control of your system. Additionally, there are various icons placed around the display screen which light up when a function is active, for example CD, Radio or Aux.*

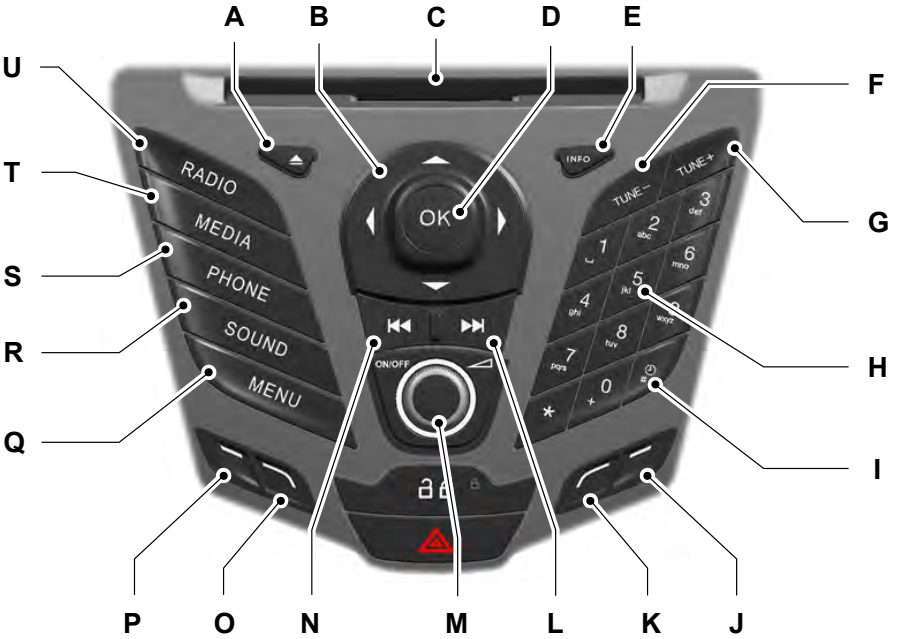

E156629

Information Provided by:
DEALER E-PROCESS

A **Eject:** Press the button to eject a CD.

B **Cursor arrows:** Press a button to scroll through on-screen choices.

C **CD slot:** Where you insert a CD.

D **OK:** Press the button to confirm on-screen selections.

E **INFO:** Press the button to access radio, CD, USB and IPod information.

F **TUNE -:** Press the button to manual tune down the waveband.

G **TUNE +:** Press the button to manual tune up the waveband.

H **Numeric keypad:** Press the button to recall a previously stored station. To store a favorite station press and hold until the sound returns.

I **Clock:** Press the button to set the clock, except when in phone mode.

J **Function button 4:** Press the button to select different functions of the audio system depending on which mode (i.e. radio or CD) you are in.

K **Function button 3:** Press the button to select different functions of the audio system depending on which mode (i.e. radio or CD) you are in.

L **Seek up:** Press the button to go to the next station up the radio frequency band or the next track on a CD.

M **On, Off and Volume:** Press the button to switch the audio system on or off. Turn the dial to adjust the volume.

N **Seek down:** Press the button to go to the next station down the radio frequency band or the previous track on a CD.

O **Function button 2:** Press the button to select different functions of the audio system depending on which mode (i.e. radio or CD) you are in.

P **Function button 1:** Press the button to select different functions of the audio system depending on which mode (i.e. radio or CD) you are in.

Q **MENU:** Press the button to access different audio system features.

R **SOUND:** Press the button to adjust the sound settings for bass, treble, middle, balance and fade.

S **PHONE:** Press the button to access the phone feature of the SYNC system by pressing **PHONE** then **MENU**. See separate manual.

T **MEDIA:** Press the button to access the AUX and SYNC features, it will also cancel the menu or list browsing.

U **RADIO:** Press the button to select different radio bands, it will also cancel the menu or list browsing.

Information Provided by:
DEALER E-PROCESS

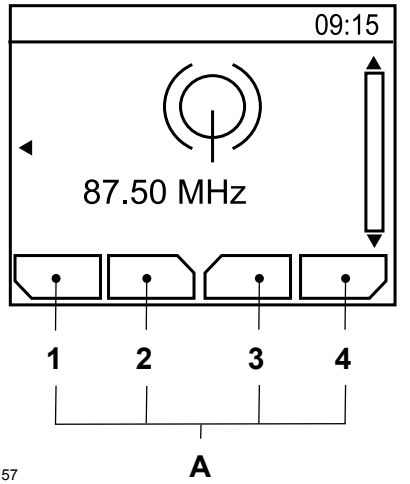

E104157

A Descriptions for function buttons 1-4

Function buttons 1 to 4 are context dependent, and change according to the current unit mode. The description for the current function displays in the screen.

Sound Button

This will allow you to adjust the sound settings (for example bass, middle and treble).

1. Press the **SOUND** button.
2. Use the up and down arrow buttons to select the required setting.
3. Use the left and right arrow buttons to make the necessary adjustment. The display indicates the level selected.
4. Press the **OK** button to confirm the new settings.

Waveband Button

Press the **RADIO** button to select from the wavebands available.

You can use the selector to return to radio reception when you have been listening to another source.

Alternatively, press the left arrow button to display the available wavebands. Scroll to the required waveband and press **OK**.

Station Tuning Control

Seek Tuning

Select a waveband and briefly press one of the seek buttons. The unit will stop at the first station it finds in the direction you have chosen.

Manual Tuning

1. Press **function button 2**.
2. Use the left and right arrow buttons to tune down or up the waveband in small increments or press and hold to increment quickly, until you find a station you want to listen to.
3. Press **OK** to continue listening to a station.

Scan Tuning

Scan allows you to listen to a few seconds of each station detected.

1. Press **function button 3**.
2. Use the seek buttons to scan up or down the selected waveband.
3. Press **function button 3** again or **OK** to continue listening to a station.

Station Preset Buttons

This feature allows you to store your favorite stations, they can be recalled by selecting the appropriate waveband and pressing one of the preset buttons.

1. Select a waveband.
2. Tune to the station required.

Information Provided by:
DEALER E-PROCESS

3. Press and hold one of the preset buttons. A progress bar and message will appear. When the progress bar completes the station has been stored. The audio unit will also mute momentarily as confirmation.

You can repeat this on each waveband and for each preset button.

Note: *When you drive to another part of the country, stations that broadcast on alternative frequencies, and are stored on preset buttons, may be updated with the correct frequency and station name for that area.*

Autostore Control

Note: *This will store up to a maximum of the 10 strongest signals available, either from the AM or the FM waveband, and overwrite the previously stored stations. You can also store stations manually in the same way as other wavebands.*

- Press and hold the **RADIO** button.
- When the search is complete, sound is restored and the strongest signals are stored on the autostore presets.

Automatic Volume Control

When available, automatic volume control adjusts the volume level to compensate for engine noise and road speed noise.

1. Press the **MENU** button and select**Audio Settings**.
2. Select **Spd. Comp. Vol**.
3. Use the left or right arrow button to adjust the setting.
4. Press the **OK** button to confirm your selection.
5. Press the **MENU** button to return.

Alternative Frequencies

The majority of programs that broadcast on the FM waveband have a program identification code, it can be recognized by audio units.

When your vehicle moves from one transmission area to another with the alternative frequencies tuning switched on, this function will search for the strongest station signal.

Under certain conditions, alternative frequencies tuning may temporarily disrupt normal reception.

When selected, the unit continually evaluates signal strength and, if a better signal becomes available, the unit will switch to that alternative. It mutes while it checks a list of alternative frequencies and if necessary, it will search once across the selected waveband for a genuine alternative frequency.

It will restore radio reception when it finds one or if one is not found, the unit will return to the original stored frequency.

When selected, **AF** will be shown in the display.

1. Press the **MENU** button.
2. Select **Audio Settings**.
3. Scroll to **Alternat. freq**. or **Alt. Frequency**. and turn on or off with the **OK** button.
4. Press the **MENU** button to return.

Information Provided by:
DEALER E-PROCESS

AUDIO UNIT - VEHICLES WITH: TOUCHSCREEN DISPLAY

WARNING

Driving while distracted can result in loss of vehicle control, crash and injury. We strongly recommend that you use extreme caution when using any device that may take your focus off the road. Your primary responsibility is the safe operation of your vehicle. We recommend against the use of any hand-held device while driving and encourage the use of voice-operated systems when possible. Make sure you are aware of all applicable local laws that may affect the use of electronic devices while driving.

Note: *The touchscreen controls most of the audio features.*

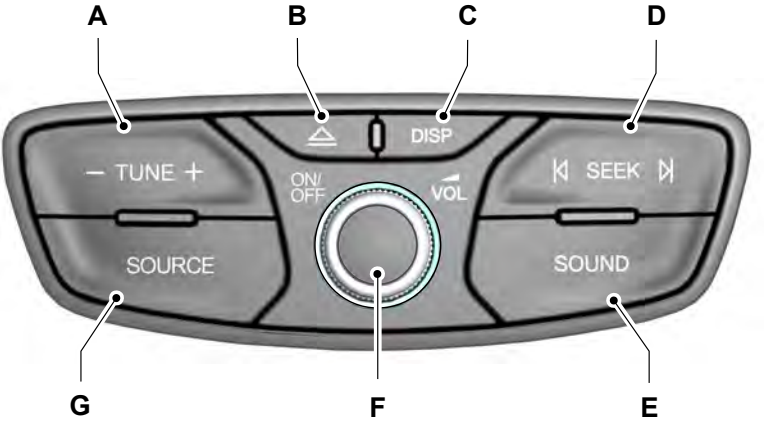

E156662

A **TUNE:** Press these buttons when in radio mode to manually search up or down through the radio frequency band. In SIRIUS mode, press these buttons to find the next or previous available satellite radio station.

B **Eject:** Press the button to eject a CD.

C **DISP:** Press the button to turn the display into idle mode.

Information Provided by:
DEALER E-PROCESS

D **SEEK:** Press these buttons when you are in radio mode to go to the next station up or down the radio frequency band, or to go to the next or previous track on a CD. In SIRIUS mode, press these buttons to select the next or previous channel. If a specific category is selected (for example Jazz, Rock or News), use these buttons to find the next or previous channel in the selected category.

E **SOUND:** Press the button to adjust the sound settings for bass, treble, middle, balance and fade.

F **On, Off and Volume:** Press the button to switch the audio system on or off. Turn the dial to adjust the volume.

G **SOURCE:** Press the button to access different audio modes, for example AM, FM, Satellite radio and A/V input.

AUDIO UNIT - VEHICLES WITH: SONY AUDIO SYSTEM/ TOUCHSCREEN DISPLAY

WARNING

Driving while distracted can result in loss of vehicle control, crash and injury. We strongly recommend that you use extreme caution when using any device that may take your focus off the road. Your primary responsibility is the safe operation of your vehicle. We recommend against the use of any hand-held device while driving and encourage the use of voice-operated systems when possible. Make sure you are aware of all applicable local laws that may affect the use of electronic devices while driving.

Note: *The touchscreen controls most of the audio features.*

Information Provided by: DEALER E-PROCESS

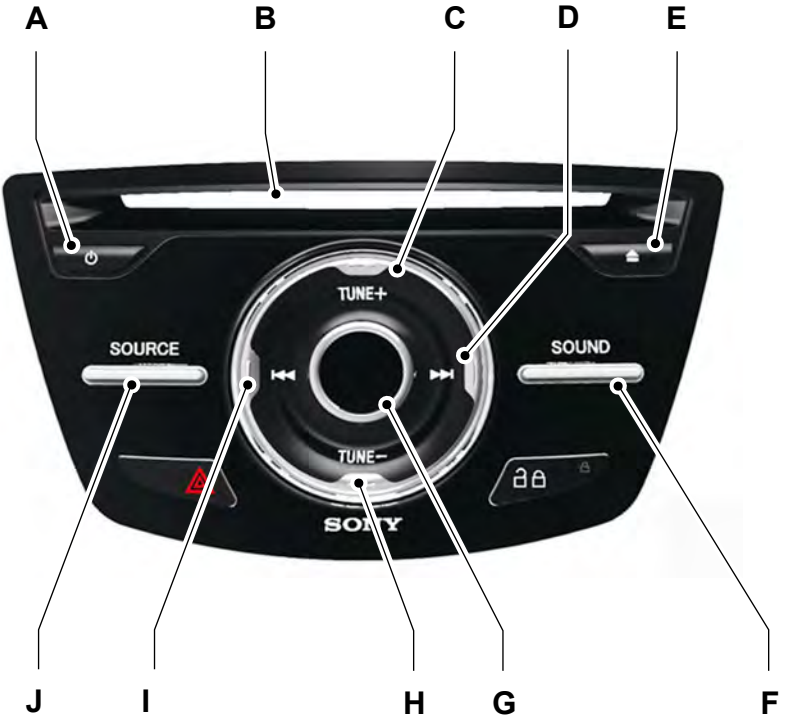

E156663

A **On, Off:** Press the button to switch the audio system on or off.

B **CD Slot** Where you insert a CD.

C **TUNE +:** In radio mode, press this button to manually search forward through the radio frequency band. In SIRIUS mode, press this button to find the next available satellite radio station.

D **Seek up** In radio mode, press this button to go to the next station up the radio frequency band. Press to go to the next track on a CD. In SIRIUS mode, press this button to select the next channel. If a specific category is selected (for example Jazz, Rock or News), use this button to find the next channel in the selected category.

E **Eject:** Press the button to eject a CD.

Information Provided by:
DEALER E-PROCESS

F **SOUND:** Press the button to adjust the sound settings for bass, treble, middle, balance and fade.

G **Volume** Turn the dial to adjust the volume.

H **TUNE -:** In radio mode, press this button to manually search backward through the radio frequency band. In SIRIUS mode, press this button to find the previous available satellite radio station.

I **Seek down** In radio mode, press this button to go to the next station down the radio frequency band. Press to go to the previous track on a CD. In SIRIUS mode, press this button to select the previous channel. If a specific category is selected (for example Jazz, Rock or News), use this button to find the previous channel in the selected category.

J **SOURCE:** Press the button to access different audio modes, for example AM, FM, Satellite radio and A/V input.

DIGITAL RADIO

Note: *HD Radio broadcasts are not available in all markets.*

HD Radio technology is the digital evolution of analog AM/FM radio. Your system has a special receiver that allows it to receive digital broadcasts (where available) in addition to the analog broadcasts, it already receives. Digital broadcasts provide a better sound quality than analog broadcasts with free, crystal-clear audio and no static or distortion. For more information, and a guide to available stations and programming, please visit www.hdradio.com.

When HD Radio is on and you tune to a station broadcasting HD Radio technology, you may notice the HD Radio logo on your screen. When this logo is available, you may also see Title and Artist fields on-screen.

The multicast indicator appears in FM mode (only) if the current station is broadcasting multiple digital broadcasts. The highlighted numbers signify available digital channels where new or different content is available. HD1 signifies the main programming status and is available in analog and digital broadcasts. Other multicast stations (HD2 through HD7) are only available digitally.

When HD Radio broadcasts are active, you can access the following functions:

- **Scan** allows you to hear a brief sampling of all available stations. This feature still works when HD Radio reception is on, although it does not scan for HD2-HD7 channels. You may see the HD logo appear if the station has a digital broadcast.
- **Memory presets** allow you to save an active channel as a memory preset. Touch and hold a memory preset slot until the sound returns. There is a brief mute while the radio saves the station. Sound returns when finished. When switching to an HD2 or HD3 memory preset, the sound mutes before the digital audio plays, because the system has to reacquire the digital signal.

Information Provided by: DEALER E-PROCESS

Note: *As with any saved radio station, you cannot access the saved station if your vehicle is outside the station's reception area.*

HD Radio Reception and Station Troubleshooting

Potential reception issues	
Reception area	If you are listening to a multicast station and you are on the fringe of the reception area, the station may mute due to weak signal strength.
	If you are listening to HD1, the system switches back to the analog broadcast until the digital broadcast is available again. However, if you are listening to any of the possible HD2-HD7 multicast channels, the station mutes and stays muted unless it is able to connect to the digital signal again.
Station blending	When the system first receives a station (aside from HD2-HD7 multicast stations), it first plays the station in the analog version. Once the receiver verifies the station is an HD Radio station, it shifts to the digital version. Depending on the station quality, you may hear a slight sound change when the station changes from analog to digital. Blending is the shift from analog to digital sound or digital back to analog sound.

In order to provide the best possible experience, use the contact form to report any station issues found while listening to a station broadcasting with HD Radio technology. Independent entities own and operate each station. These stations are responsible for ensuring all audio streams and data fields are accurate.

Information Provided by:
DEALER E-PROCESS

Potential station issues		
Issues	**Cause**	**Action**
Echo, stutter, skip or repeat in audio. Increase or decrease in audio volume.	This is poor time alignment by the radio broadcaster.	No action required. This is a broadcast issue.
Sound fading or blending in and out.	The radio is shifting between analog and digital audio.	No action required. The reception issue may clear up as you continue to drive.
There is an audio mute delay when selecting HD2 or HD3, multicast preset or **Direct Tune**.	The digital multicast is not available until the HD Radio broadcast is decoded. Once decoded, the audio is available.	No action required. This is normal behavior. Wait until the audio is available.
Cannot access HD2 or HD3 multicast channel when recalling a preset or from a direct tune.	The previously stored multicast preset or direct tune is not available in your current reception area.	No action required. The station is not available in your current location.
Text information does not match currently playing audio.	Data service issue by the radio broadcaster.	Fill out the station issue form at website listed below.*
There is no text information shown for currently selected frequency.	Data service issue by the radio broadcaster.	Fill out the station issue form at website listed below.*
HD2-HD7 stations not found when **Scan** is pressed.	Pressing **Scan** disables HD2-HD7 channel search.	No action required. This is normal behavior.

* http://www.ibiquity.com/automotive/report_radio_station_experiences

HD Radio Technology manufactured under license from iBiquity Digital Corp. U.S. and foreign patents. HD Radio and the HD and HD Radio logos are proprietary trademarks of iBiquity Digital Corp. Ford Motor Company and iBiquity Digital Corp. are not responsible for the content sent using HD Radio technology. Content may be changed, added or deleted at any time at the station owner's discretion.

SATELLITE RADIO

SIRIUS® broadcasts a variety of music, news, sports, weather, traffic and entertainment satellite radio channels. For more information and a complete list of SIRIUS satellite radio channels, visit www.siriusxm.com in the United States, www.siriusxm.ca in Canada, or call SIRIUS at 1-888-539-7474.

Information Provided by:
DEALER E-PROCESS

Note: *This receiver includes the eCos real-time operating system. eCos is published under the eCos License.*

Satellite Radio Reception Factors

Potential satellite radio reception issues	
Antenna obstructions	For optimal reception performance, keep the antenna clear of snow and ice build-up and keep luggage and other material as far away from the antenna as possible.
Terrain	Hills, mountains, tall buildings, bridges, tunnels, freeway overpasses, parking garages, dense tree foliage and thunderstorms can interfere with your reception.
Station overload	When you pass a ground-based broadcast-repeating tower, a stronger signal may overtake a weaker one and the audio system may mute.
Satellite radio signal interference	Your display may show ACQUIRING . . . to indicate the interference and the audio system may mute.

SIRIUS® Satellite Radio Service

Note: *SIRIUS reserves the unrestricted right to change, rearrange, add or delete programming including canceling, moving or adding particular channels, and its prices, at any time, with or without notice to you. Ford Motor Company shall not be responsible for any such programming changes.*

E142593

SIRIUS satellite radio is a subscription-based satellite radio service that broadcasts a variety of music, sports, news, weather, traffic and entertainment programming. Your factory-installed SIRIUS satellite radio system includes hardware and a limited subscription term, which begins on the date of sale or lease of your vehicle. See an authorized dealer for availability.

For more information on extended subscription terms (a service fee is required), the online media player and a complete list of SIRIUS satellite radio channels, and other features, please visit www.siriusxm.com in the United States, www.siriusxm.ca in Canada, or call SIRIUS at 1-888-539-7474.

Satellite Radio Electronic Serial Number (ESN)

You need your ESN to activate, modify or track your satellite radio account. When in satellite radio mode, tune to channel 0.

Information Provided by: DEALER E-PROCESS

Troubleshooting

Message	Condition	Action
Acquiring...	Radio requires more than two seconds to produce audio for the selected channel.	No action required. This message should disappear shortly.
Satellite antenna fault SIRIUS system failure	There is an internal module or system failure present.	If this message does not clear shortly, or with an ignition key cycle, your receiver may have a fault. See an authorized dealer for service.
Invalid Channel	The channel is no longer available.	Tune to another channel or choose another preset.
Unsubscribed Channel	Your subscription does not include this channel.	Contact SIRIUS at 1-888-539-7474 to subscribe to the channel, or tune to another channel.
No Signal	The signal is lost from the SIRIUS satellite or SIRIUS tower to your vehicle antenna.	The signal is blocked. When you move into an open area, the signal should return.
Updating...	Update of channel programming in progress.	No action required. The process may take up to three minutes.
Questions? Call 1-888-539-7474	Your satellite service is no longer available.	Contact SIRIUS at 1-888-539-7474 to resolve subscription issues.
None found Check Channel Guide	All the channels in the selected category are either skipped or locked.	Use the channel guide to turn off the Lock or Skip function on that station.
Subscription Updated	SIRIUS has updated the channels available for your vehicle.	No action required.

Information Provided by:
DEALER E-PROCESS

AUDIO INPUT JACK

WARNINGS

Driving while distracted can result in loss of vehicle control, crash and injury. We strongly recommend that you use extreme caution when using any device that may take your focus off the road. Your primary responsibility is the safe operation of your vehicle. We recommend against the use of any hand-held device while driving and encourage the use of voice-operated systems when possible. Make sure you are aware of all applicable local laws that may affect the use of electronic devices while driving.

For safety reasons, do not connect or adjust the settings on your portable music player while your vehicle is moving.

Store the portable music player in a secure location, such as the center console or the glove box, when your vehicle is moving. Hard objects may become projectiles in a collision or sudden stop, which may increase the risk of serious injury. The audio extension cable must be long enough to allow the portable music player to be safely stored while your vehicle is moving.

E149149

The auxiliary input jack allows you to connect and play music from your portable music player through your vehicle speakers. You can use any portable music player designed for use with headphones. Your audio extension cable must have male 1/8th-inch (3.5 millimeter) connectors at each end.

1. Switch off the engine, radio and portable music player. Set the parking brake and put the transmission in position **P** (vehicle with an automatic transmission) or neutral (vehicle with a manual transmission).
2. Plug the extension cable from the portable music player into the auxiliary input jack.
3. Switch the radio on. Select either a tuned FM station or a CD.
4. Adjust the volume as desired.
5. Switch your portable music player on and adjust its volume to half its maximum level.
6. Press **AUX** until **LINE** or **LINE IN** appears in the display. You should hear music from your device even if it is low.
7. Adjust the volume on your portable music player until it reaches the volume level of the FM station or CD. Do this by switching back and forth between the AUX and FM or CD controls.

Information Provided by:
DEALER E-PROCESS

USB PORT (If Equipped)

WARNING

Driving while distracted can result in loss of vehicle control, crash and injury. We strongly recommend that you use extreme caution when using any device that may take your focus off the road. Your primary responsibility is the safe operation of your vehicle. We recommend against the use of any hand-held device while driving and encourage the use of voice-operated systems when possible. Make sure you are aware of all applicable local laws that may affect the use of electronic devices while driving.

E201595

The USB port allows you to plug in media playing devices, memory sticks and charge devices (if supported). See **Using SYNC™ With Your Media Player** (page 293).

MEDIA HUB (If Equipped)

The media hub is located in a compartment inside the center console.

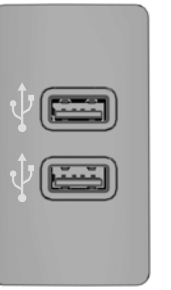

E211463

See SYNC Supplement.

Information Provided by:
DEALER E-PROCESS

GENERAL INFORMATION

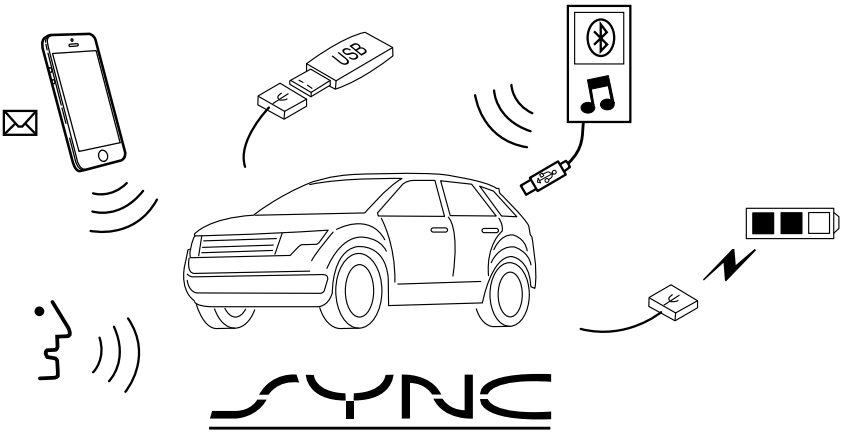

E198355

SYNC is an in-vehicle communications system that works with your Bluetooth-enabled cellular phone and portable media player. This allows you to:

- Make and receive calls.
- Access and play music from your portable music player.
- Use 911 Assist, Vehicle Health Report and SYNC Services (Traffic, Directions & Information).*
- Use applications, such as Stitcher, via SYNC AppLink.**
- Access phonebook contacts and music using voice commands.
- Stream music from your connected phone.
- Text message.
- Use the advanced voice recognition system.
- Charge your USB device (if your device supports this).

*These features are not available in all markets and require activation.

**Available AppLink enabled apps vary by market.

Make sure that you review your device's manual before using it with SYNC.

Support

The SYNC support team is available to help you with any questions you cannot answer on your own.

Information Provided by:
DEALER E-PROCESS

Monday-Saturday, 8:30am-9:00pm EST.

Sunday, 10:30am-7:30pm EST.

In the United States, call 1-800-392-3673.

In Canada, call 1-800-565-3673.

Times are subject to change due to holidays.

SYNC Owner Account

Why do I need a SYNC owner account?

- Required to activate Vehicle Health Report and to view the reports online.
- Required to activate the subscription-based SYNC Services and to personalize your Saved Points and Favorites.
- Essential for keeping up with the latest software downloads available for SYNC.
- Access to customer support for any questions you may have.

Driving Restrictions

For your safety, certain features are speed-dependent and restricted when your vehicle is traveling over 3 mph (5 km/h).

Safety Information

WARNING

Driving while distracted can result in loss of vehicle control, crash and injury. We strongly recommend that you use extreme caution when using any device that may take your focus off the road. Your primary responsibility is the safe operation of your vehicle. We recommend against the use of any hand-held device while driving and encourage the use of voice-operated systems when possible. Make sure you are aware of all applicable local laws that may affect the use of electronic devices while driving.

When using SYNC:

- Do not operate playing devices if the power cords or cables are broken, split or damaged. Place cords and cables out of the way, so they do not interfere with the operation of pedals, seats, compartments or safe driving abilities.
- Do not leave playing devices in your vehicle during extreme conditions as it could cause them damage. See your device's manual for further information.
- Do not attempt to service or repair the system. See an authorized dealer.

Privacy Information

When a cellular phone is connected to SYNC, the system creates a profile within your vehicle that is linked to that cellular phone. This profile is created in order to offer you more cellular features and to operate more efficiently. Among other things, this profile may contain data about your cellular phone book, text messages (read and unread), and call history, including history of calls when your cellular phone was not connected to the system. In addition, if you connect a media device, the system creates and retains an index of supported media content. The system also records a short development log of approximately 10 minutes of all recent system activity. The log profile and other system data may be used to improve the system and help diagnose any problems that may occur.

The cellular profile, media device index, and development log will remain in the vehicle unless you delete them and are generally accessible only in the vehicle when the cellular phone or media player is connected. If you no longer plan to use the system or the vehicle, we recommend you perform a Master Reset to erase all stored information.

Information Provided by: DEALER E-PROCESS

System data cannot be accessed without special equipment and access to the vehicle's SYNC module. Ford Motor Company and Ford of Canada will not access the system data for any purpose other than as described absent consent, a court order, or where required by law enforcement, other government authorities, or other third parties acting with lawful authority. Other parties may seek to access the information independently of Ford Motor Company and Ford of Canada. For further privacy information, see the sections on 911 Assist, Vehicle Health Report, and Traffic, Directions and Information.

USING VOICE RECOGNITION

This system helps you control many features using voice commands. This allows you to keep your hands on the wheel and focus on what is in front of you.

Helpful Hints

- Make sure the interior of your vehicle is as quiet as possible. Wind noise from open windows and road vibrations may prevent the system from correctly recognizing spoken commands.
- After pressing the voice button, wait until after the tone sounds and Listening appears before saying a command. Any command spoken before this does not register with the system.
- Speak naturally, without long pauses between words.
- At any time, you can interrupt the system while it is speaking by pressing the voice button.

Initiating a Voice Session

Initiate a voice session by pressing the voice button on the steering wheel controls. See **Voice Control** (page 67).

When prompted you can say any of the following:

Voice command	If you want the system to carry out the following
Bluetooth Audio	Stream audio from your phone.
Cancel	Cancel the requested action.
mobile (apps | applications)	Access mobile applications.
Phone	Make calls.
USB [1]	Access the device connected to your USB port.
Vehicle Health (Report)	Run a vehicle health report.

Information Provided by: DEALER E-PROCESS

Voice command	If you want the system to carry out the following
Voice Settings | Voice Preferences	Adjust the level of voice interaction and feedback.
Help	Hear a list of voice commands available in the current mode.

You can say any of the voice commands that appear within open and close brackets that are separated by |. For example, where (cancel | stop | exit) appears you say; cancel or stop or exit.

You must say any of the voice commands that appear outside of open and close brackets. For example, where mobile (apps | applications) appears, you must say mobile followed by either apps or applications.

You do not need to say words that appear within square brackets. For example, for where (USB [stick] | iPOD | MP3 [player]) appears, you can say USB or USB stick.

Note: *SYNC Services and Vehicle health report are only available in the United States of America.*

System Interaction and Feedback

The system provides feedback through audible tones, prompts, questions and spoken confirmations depending on the situation and the chosen level of interaction (voice settings). You can customize the voice recognition system to provide more or less instruction and feedback.

The default setting is to a higher level of interaction in order to help you learn to use the system. You can change these settings at any time.

Adjusting the Interaction Level

Initiate a voice session by pressing the voice button on the steering wheel controls. See **Voice Control** (page 67).

When prompted say the following:

Voice command	If you want the system to carry out the following
Voice Settings | Voice Preferences	
Followed by either of the following:	
Interaction Mode Standard	Provide more detailed interaction and guidance.
Interaction Mode Advanced	Provide less audible interaction and more tone prompts.

The system defaults to the standard interaction mode.

Information Provided by: DEALER E-PROCESS

Confirmation prompts are short questions the system asks when it is not sure of your request or when there are multiple possible responses to your request. For example, the system may ask "Phone, is that correct?". If turned off, the system simply makes a best guess as to what you requested and may ask you to confirm settings.

Voice command	If you want the system to carry out the following
Confirmation Prompts Off	Make a best guess from the command; you may still occasionally be asked to confirm settings.
Confirmation Prompts On	Clarify your voice command with a short question.

The system creates candidate lists when it has the same confidence level of several options based on your voice command. When turned on, it may prompt you with as many as four possibilities for clarification.

For example, say "Say 1 after the tone to call John Doe at home. Say 2 after the tone to call Johnny Doe on mobile. Say 3 after the tone to call Jane Doe at home." You could also say "Say 1 after the tone to play John Doe, Say 2 after the tone to play Johnny Doe."

Voice command	If you want the system to carry out the following
Media Candidate Lists Off	Make a best guess from the media candidate list. You may still occasionally be asked questions.
Media Candidate Lists On	Clarify your voice command for media candidates.
Phone Candidate Lists Off	Make a best guess from the phone candidate list. You may still occasionally be asked questions.
Phone Candidate Lists On	Clarify your voice command for phone candidates.

Information Provided by:
DEALER E-PROCESS

USING SYNC™ WITH YOUR PHONE

Hands-free calling is one of the main features of SYNC. While the system supports a variety of features, many are dependent on your cell phone's functionality. At a minimum, most cell phones with Bluetooth wireless technology support the following functions:

- Answering an incoming call.
- Ending a call.
- Using privacy mode.
- Dialing a number.
- Redialing.
- Call waiting notification.
- Caller ID.

Other features, such as text messaging using Bluetooth and automatic phonebook download, are cell phone-dependent features. To check your cell phone's compatibility, see your cell phone's manual and visit www.SYNCMyRide.com, www.SYNCMyRide.ca or www.syncmaroute.ca.

Pairing a Cell Phone for the First Time

Note: *SYNC can support downloading up to approximately 1000 entries per Bluetooth-enabled cell phone.*

Note: *Make sure to switch on the ignition and the radio. Put the transmission in position park (**P**) (automatic transmission) or neutral with the parking brake applied (manual transmission).*

Note: *To scroll through the menus, press the up and down arrows on your audio system.*

Wirelessly pairing your cell phone with SYNC allows you to make and receive hands-free calls.

Press the phone button. When the display indicates there is no cell phone paired, do the following:

Message	Action and Description
No Phone Paired	Press the **OK** button.
Find SYNC	1. Press the **OK** button. 2. Put your cell phone into Bluetooth discovery mode. See your device's manual if necessary. 3. When prompted on your cell phone's display, enter the six-digit PIN provided by SYNC in the radio display. The display indicates when the pairing is successful.

Information Provided by: DEALER E-PROCESS

Depending on your cell phone's capability and your market, the system may prompt you with questions, such as setting the current cell phone as the primary cell phone (the cell phone SYNC automatically tries to connect with first upon vehicle start-up) and downloading your phonebook.

Pairing Subsequent Cell Phones

Note: *To scroll through the menus, press the up and down arrows on your audio system.*

Note: *Make sure to switch on the ignition and the radio. Put the transmission in position park (**P**) (automatic transmission) or neutral with the parking brake applied (manual transmission).*

Press the phone button, then scroll to:

Message	Action
Phone settings	Press the **OK** button.
Bluetooth device	Press the **OK** button.
Add	Press the **OK** button. When the following message appears in the display.
Find SYNC	1. Press the **OK** button. 2. Put your cell phone into Bluetooth discovery mode. See your device's manual if necessary. 3. When prompted on your cell phone's display, enter the six-digit PIN provided by SYNC in the radio display. The display indicates when the pairing is successful.

The system then prompts with questions, such as if you would like to set the current cell phone as the primary cell phone (the cell phone SYNC automatically tries to connect with first upon vehicle start-up) or download your phonebook.

Phone Voice Commands

Press the voice icon and say:

Voice Commands
Phone
You can then say any of the following commands.
Call History Incoming
Call History Missed
Call History Outgoing

Voice Commands
Phonebook ___
Phonebook ___ at Home
Phonebook ___ at Work
Phonebook ___ in Office
Phonebook ___ on Cell

___ is a dynamic listing that should be the name of a contact in your phonebook. For example you could say "Call Mom".

Information Provided by: DEALER E-PROCESS

You can also say any of the following:

Voice Command
Call ___
Call ___ at Home
Call ___ at Work
Call ___ in Office
Call ___ on Mobile
Call ___ on Other
Dial

None of these commands are available until your cell phone information is completely downloaded using Bluetooth.

___ is a dynamic listing that should be the name of a contact in your phonebook. For example you could say "Call Mom".

The following commands are only available during active calls:

Voice Commands
Go To Privacy
Hold
Join

Phone Menu Commands

To access the phone menu with voice commands, press the voice button and when prompted say:

Voice Command
[Phone] Menu
You can then say any of the following:
[Phone] Connections | [Media] Connections | [Bluetooth] Connections
[Phone] Settings [Message] Notification On
[Phone] Settings [Message] Notification Off
[Phone] Settings [Set] Phone Ringer
[Phone] Settings [Set] Ringer 1
[Phone] Settings [Set] Ringer 2
[Phone] Settings [Set] Ringer 3
[Phone] Settings [Set] Ringer Off
Battery
Phone Name
Signal
Text Message Inbox
Send [New] Text Message

You do not need to say word contained within brackets for the system to understand your command.

Note: *To exit dial mode, press and hold the phone button or press MENU to go to the PHONE menu.*

Phonebook Commands

When you ask SYNC to access content, for example the phonebook name or number, the requested information appears in the display to view.

Information Provided by: DEALER E-PROCESS

Making a Call

Press the voice button and when prompted say:

Voice Command	Action and Description
Call ___	This command is not available until your cell phone information is completely downloaded using Bluetooth.
Dial	Use to enter a phone number digit by digit.
When the system confirms the number say one of the following commands:	
Dial	To confirm the number and initiate the call.
delete	To erase the last spoken digit. You can also press the left arrow button.
clear	To erase all spoken digits. You can also press and hold the left arrow button.

To end a call, press and hold the red phone button.

Receiving Calls

When receiving a call, you can:

- Answer the call by pressing the phone button.
- Reject the call by pressing and holding the red phone button.
- Ignore the call by doing nothing.

Phone Options during an Active Call

During an active call, you have more menu features that become available, for example putting a call on hold or joining calls. Use the arrow buttons to scroll through the menu options.

Press the MENU button during an active call, then scroll to:

Message	Action and Description
Active call	Press the **OK** button.
Select one of the following:	
Mute Call	Press the **OK** button to mute the call.
Privacy	Press the **OK** button to switch a call from an active hands-free environment to your cell phone for a more private conversation.
Hold	Press the **OK** button to put an active call on hold.
Join calls	Join two separate calls. SYNC supports a maximum of three callers on a multiparty call or conference call.

Information Provided by: DEALER E-PROCESS

Message	Action and Description	
	1. Press the phone button. 2. Access the desired contact through SYNC or use voice commands to place the second call. Once actively in the second call, press **MENU**. 3. Scroll to Join Calls, and press the **OK** button. Wait until the following message appears.	
	Join calls	Press the **OK** button.
Enter Tones	Enter tones such as numbers for passwords. Scroll until the desired number appears in the display, then press OK; a tone sounds as confirmation. Repeat as necessary.	
Phonebook	To access your phonebook contacts. 1. Press the **OK** button to select, and then scroll through your phonebook contacts. 2. Press the **OK** button again when the desired selection appears in the display. 3. Press the phone button to call the contact.	
Call History	To access your call history log. 1. Press the **OK** button to select, then scroll through your call history options (incoming, outgoing or missed). 2. Press the **OK** button when the desired selection appears in the display. 3. Press the phone button to call the selection.	
Return	Exit the current menu.	

Accessing Features Through the Phone Menu

The phone menu allows you to redial a number, access your call history and phonebook and sends text messages as well as access cell phone and system settings. You can also access advanced features, for example 911 Assist, Vehicle Health Report and SYNC Services.

Information Provided by:
DEALER E-PROCESS

Press the phone button to enter the Phone Menu, then scroll to:

Message	Action and Description
Phone Redial	Press the **OK** button to redial the last number called. Press the **OK** button again to confirm.
Call History	Access any previously dialed, received or missed calls after you connect your Bluetooth-enabled cell phone to SYNC.[1] Press the **OK** button then select one of the following and press the **OK** button again to confirm. Incoming calls Outgoing calls Missed calls The system attempts to automatically re-download your phonebook and call history each time your cell phone connects to SYNC (if the auto download feature is on and your Bluetooth-enabled cell phone supports this feature).
Phonebook	Access and call any contacts in your previously downloaded phonebook.[1,2] If your phonebook has less than 255 entries, they appear alphabetically in flat file mode. If there are more than 255 entries, the system will organize them into alphabetical categories. 1. Press the **OK** button. 2. Scroll to the desired contact. 3. Press **OK** or the phone button to call the contact.
Text messaging	Press the **OK** button to send, download, read and delete text messages.[1]
Phone settings	View your cell phone's status, set ring tones, select your message notification, change phonebook entries and automatically download your cell phone content among other features.[1]
SYNC Services	Access the SYNC Services portal where you can request various types of information, for example traffic reports and directions.[3]
911 Assist	Automatically place an emergency call to a 911 operator following a crash.[4]

Information Provided by:
DEALER E-PROCESS

Message	Action and Description
Vehicle Health	Create and receive a diagnostic report card on your vehicle.[3]
Mobile Apps	Interact with SYNC-capable mobile applications on your smartphone.
Sys Settings	Access Bluetooth Devices menu listings and advanced menu listings.
Exit	Press the **OK** button to exit the phone menu.

[1] This is a cell phone-dependent feature.

[2] This is a cell phone-dependent and speed-dependent feature.

[3] This is an optional feature and available in the United States only.

[4] This is an optional feature and available in the United States and Canada only.

Text Messaging

Note: *This is a cell phone-dependent feature.*

SYNC allows you to receive, send, download and delete text messages. The system can also read incoming text messages to you so that you do not have to take your eyes off the road.

Note: *This is a cell phone-dependent feature.*

Receiving a Text Message

Note: *This is a cell phone-dependent feature. Your cell phone must support downloading text messages using Bluetooth to receive incoming text messages.*

Note: *Forwarding a text message is a speed-dependent feature. It is only available when your vehicle is traveling at 3 mph (5 km/h) or less.*

Note: *Only one recipient is allowed per text message.*

When a new text message arrives, an audible tone sounds and the information display indicates you have a new message.

Following the notification you can do any of the following:

Do nothing to have the message go into your text message inbox.

To have SYNC read you the message using voice commands, press the voice button and when prompted say:

Voice Command	Action and Description
Read Message | Read Text Message | Text Message	SYNC will read the most recent text message to you.

Information Provided by: DEALER E-PROCESS

To open the test message, press OK to receive and open the text message. Press OK again and SYNC reads your message aloud as you are not able to view the message. You can then also choose whether you'd like to reply or forward the message.

Reply or forward the message, press OK and scroll to choose between:

Message	Action and Description
Reply to sender	Press the **OK** button to access and then scroll through the list of pre-defined messages to send.
Forward msg.	Press the **OK** button to forward the message to anyone in your Phonebook or Call History. You can also choose enter a number.

Sending, Downloading and Deleting Your Text Messages

Text messaging is a cell phone-dependent feature. If your cell phone is compatible, SYNC allows you to receive, send, download and delete text messages.

Note: *Sending a text message is a speed-dependent feature. It is only available when your vehicle is traveling at 3 mph (5 km/h) or less.*

Note: *You can only have one recipient per text message.*

Press the phone button, then scroll to:

Message	Action and Description
Text messaging	Press the **OK** button.
Select one of the following:	
Send Text Message?	Allows you to send a new text message based on a pre-defined set of 15 messages. 1. Press the **OK** button. 2. Scroll to your desired message. 3. Press the **OK** button. 4. Scroll through your phonebook, call history entries or enter a new number. 5. Press the **OK** button to enter the desired contact. 6. Press the **OK** button again when the system asks if you would like to send the message. The system sends each text message with the following signature: This message was sent from my Ford.

Information Provided by: DEALER E-PROCESS

Message	Action and Description
Download now	Allows you to download your unread messages to SYNC. To download the messages, press the **OK** button to select. The display indicates the system is downloading your messages. When downloading is complete, SYNC returns you to the inbox.
Delete All Messages?	Allows you to delete current text messages from SYNC. To delete the messages, press the **OK** button to select. The display indicates when it is finished deleting all your text messages. SYNC returns you to the text message menu.
Return	Press the **OK** button to exit the current menu.

Accessing Your Phone Settings

These are cell phone-dependent features. Your cell phone settings allow you to access and adjust some features. For example ring tones, text message notification, modify your phonebook and set up automatic download.

Press the phone button, then scroll to:

Message	Action and Description
Phone settings	Press the **OK** button.
Select one of the following:	
Phone status	See the provider, name, signal power, battery power and roaming status of your connected cell phone. Press **OK** to select and scroll to view the information. When done, press **OK** again to return to the phone status menu.
Set ringtone	Select which ring tone sounds during an incoming call. You can choose one of the system ring tones or your cell phone ring tones. Press the **OK** button and scroll to hear the available options. You can also choose to use to use your phone's ring tone.
	Press the **OK** button to select the desired ring tone. If your cell phone supports in-band ringing, your cell phone ring plays when you choose the phone ringer option.
Text msg notify	You have the option of hearing an audible tone to notify you when a text message arrives.

Information Provided by:
DEALER E-PROCESS

Message	Action and Description	
	Press the **OK** button then select one of the following and press the **OK** button again to confirm. Message Notification On Message Notification Off	
Modify Phonebook	Modify the contents of your phone book (such as add, delete, download). Press OK to select and scroll between:	
	Add contacts	Press the **OK** button to add more contacts from your phonebook. Push the desired contact(s) on your cell phone. See your cell phone's manual on how to push contacts.
	Delete Phonebook	Press **OK** to delete the current phone book and call history. When Delete Phonebook appears, press OK to confirm. SYNC takes you back to the Phone Settings menu.
	Download Phonebook	Press **OK** to select and press OK again when Confirm Download? appears.
Auto-download	Automatically download your phone book each time your phone connects to SYNC. Press OK to select.	
	Auto On?	When this message appears, press **OK** to have your phonebook automatically downloaded each time. Select Off to NOT download your phonebook every time your phone connects to SYNC. Your phonebook, call history and text messages can only be accessed when your specific phone is connected to SYNC. *
Speak Names	When enabled, SYNC speaks the contact name that is displayed on the screen during phonebook browsing.	
Return	Exit the current menu.	

* Downloading times are cell phone-dependent and quantity-dependent. When Auto Download is on, it automatically deletes any changes, additions or deletions saved since your last download.

System Settings

This menu provides access to your Bluetooth Devices and Advanced menu features. Use the arrow buttons to scroll through the menu options.

Bluetooth Devices

The Bluetooth Devices menu allows you to add, connect and delete devices, set a cell phone as primary as well as turn your Bluetooth feature on and off.

Information Provided by: DEALER E-PROCESS

Press the Phone button to enter the Phone Menu, then scroll to:

Message	Action and Description
Sys Settings	Press the **OK** button.
Bluetooth device	Press the **OK** button.
Select one of the following:	
Add	See **Using SYNC™ With Your Phone** (page 272). [1]
Connect BT	Connect a previously paired Bluetooth-enabled phone. [2] Press **OK** to select and view a list of previously paired phones. Scroll until the desired device is chosen, then press OK to connect the phone.
Set Primary?	Set a previously paired phone as your primary phone. [3] Press **OK** to select and scroll to select the desired phone. Press OK to confirm.
Bluetooth On and Off	Turn the Bluetooth feature on and off.[4] Press **OK** and scroll to toggle between On and Off. When the desired selection is chosen, press **OK**. Setting Bluetooth to off disconnects all Bluetooth devices and turns off all Bluetooth features.
Del Device	Delete a paired cell phone. Press the **OK** button and scroll to select the device. Press **OK** to confirm.
Delete all	Delete all previously paired phones (and all information originally saved with those phones). Press **OK** to select.
Return	Exit the current menu.

[1] This is a speed-dependent feature. It is only available when your vehicle is traveling at 3 mph (5 km/h) or less.

[2] You can only connect one device at a time. When another cell phone is connected, the previous one is disconnected.

[3] SYNC attempts to connect with the primary phone at every ignition cycle. When a phone is selected as primary, it appears first in the list and is marked with an asterisk (*).

[4]Turning Bluetooth off disconnects all Bluetooth devices and deactivates all Bluetooth features.

Information Provided by:
DEALER E-PROCESS

Advanced

The Advanced menu allows you to access and set prompts, languages, defaults, perform a master reset, install an application and view system information.

To access the advanced menu, press the phone button to enter the Phone Menu, the scroll to:

Message	Action and Description
Sys Settings	Press **OK**.
Advanced	Press **OK**.
Select one of the following:	
Confirmation Prompts	Get help from SYNC by using questions, helpful hints or asking you for a specific action. To turn these prompts on or off: 1. Press the **OK** button to select and scroll to select between On and Off. 2. Press the **OK** button when the desired selection appears in the display. SYNC returns you to the Advanced menu.
Language	1. Press **OK** to select and then scroll through the languages. Choose between English, Français and Español. Once selected, all of the radio displays and prompts are in the selected language. 2. Press **OK** when the desired selection appears in the display. If you change the language setting, the display indicates that the system is updating. When complete, SYNC returns you to the Advanced menu.
Factory Defaults	Return to the factory default settings. This selection does not erase your indexed information, for example phonebook, call history, text messages or paired devices. Press the **OK** button to select and then press **OK** again when the following message appears in the display. Confirm Restore
Master reset	Completely erase all information stored on SYNC, for example phonebook, call history, text messages and paired devices, and return the system to the factory default settings. Press **OK** to select. The display indicates when complete. SYNC returns you to the Advanced menu.
Install Applications	Install applications you have downloaded.

Information Provided by:
DEALER E-PROCESS

Message	Action and Description
	Press the **OK** button and scroll to select. Press the **OK** button to confirm.
System info	Access the Auto Version number as well as the FDN number. Press the **OK** button to select.
Return	Exit the current menu.

SYNC™ APPLICATIONS AND SERVICES (If Equipped)

In order for the following features to work, your cell phone must be compatible with SYNC. To check your phone's compatibility, visit www.SYNCMyRide.com, www.SYNCMyRide.ca or www.syncmaroute.ca.

- SYNC Services*: Provides access to traffic, directions and information such as travel, horoscopes, stock prices and more.
- 911 Assist: Can alert 911 in the event of an emergency.
- Vehicle Health Report*: Provides a diagnostic and maintenance report card of your vehicle.

*This is an optional feature and available in the United States only.

911 Assist (If Equipped)

WARNINGS

Unless the 911 Assist setting is set on before a crash, the system will not dial for help which could delay response time, potentially increasing the risk of serious injury or death after a crash.

WARNINGS

Do not wait for 911 Assist to make an emergency call if you can do it yourself. Dial emergency services immediately to avoid delayed response time which could increase the risk of serious injury or death after a crash. If you do not hear 911 Assist within five seconds of the crash, the system or phone may be damaged or non-functional.

Always place your phone in a secure location in your vehicle so it does not become a projectile or get damaged in a crash. Failure to do so may cause serious injury to someone or damage the phone which could prevent 911 Assist from working properly.

Note: *The SYNC 911 Assist feature must be set on before the incident.*

Note: *Before setting this feature on, make sure that you read the 911 Assist Privacy Notice later in this section for important information.*

Note: *If any user turns 911 Assist on or off, that setting applies for all paired phones. If 911 Assist is turned off, either a voice message plays or a display message (or icon) comes on (or both) when your vehicle is started after a previously paired phone connects.*

Note: *Every phone operates differently. While SYNC 911 Assist works with most cellular phones, some may have trouble using this feature.*

Information Provided by: DEALER E-PROCESS

If a crash deploys an airbag (excluding knee airbags and rear inflatable safety belts [if equipped]) or activates the fuel pump shut-off, your SYNC-equipped vehicle may be able to contact emergency services by dialing 911 through a paired and connected Bluetooth-enabled phone. You can learn more about the 911 Assist feature, visit www.SYNCMyRide.com, www.SYNCMyRide.ca or www.syncmaroute.ca.

See **Supplementary Restraints System** (page 36). Important information about airbag deployment is in this chapter.

See **Roadside Emergencies** (page 157). Important information about the fuel pump shut-off is in this chapter.

Switching 911 Assist On or Off

Press the phone button to enter the phone menu and scroll to:

Message	Action and Description
911 Assist	Press the **OK** button to confirm and enter the 911 Assist menu.
On Off	Press the **OK** button when the desired option appears in the radio display.

Off selections include:

Message	Action and Description
Off with reminder:	Provides a display and voice reminder at phone connection at vehicle start.
Off without reminder:	Provides a display reminder only without a voice reminder at phone connection.

To make sure that 911 Assist works correctly:

- SYNC must be powered and working properly at the time of the incident and throughout feature activation and use.
- The 911 Assist feature must be set on before the incident.
- You must pair and connect a Bluetooth-enabled and compatible cell phone to SYNC.
- A connected Bluetooth-enabled phone must have the ability to make and maintain an outgoing call at the time of the incident.
- A connected Bluetooth-enabled phone must have adequate network coverage, battery power and signal strength.
- The vehicle must have battery power and be located in the U.S., Canada or in a territory in which 911 is the emergency number.

Information Provided by: DEALER E-PROCESS

In the Event of a Crash

Not all crashes will deploy an airbag or activate the fuel pump shut-off (the triggers for 911 Assist). If a connected cell phone sustains damage or loses its connection to SYNC during a crash, SYNC will search for and try to connect to a previously paired cell phone; SYNC will then attempt to call the emergency services.

Before making the call:

- SYNC provides a short window of time (about 10 seconds) to cancel the call. If you fail to cancel the call, SYNC attempts to dial 911.
- SYNC says the following, or a similar message: "SYNC will attempt to call 911, to cancel the call, press Cancel on your screen or press and hold the phone button on your steering wheel."

If you do not cancel the call, and SYNC makes a successful call, a pre-recorded message plays for the 911 operator, and then the occupant(s) in your vehicle is able to talk with the operator. Be prepared to provide your name, phone number and location immediately, because not all 911 systems are capable of receiving this information electronically.

911 Assist May Not Work If

- Your cellular phone or 911 Assist hardware sustains damage in a crash.
- The vehicle's battery or the SYNC system has no power.
- The phone(s) thrown from your vehicle are the ones paired and connected to the system.

911 Assist Privacy Notice

When you turn on 911 Assist, it may disclose to emergency services that your vehicle has been in a crash involving the deployment of an airbag or activation of the fuel pump shut-off. Certain versions or updates to 911 Assist may also be capable of electronically or verbally disclosing to 911 operators your vehicle location or other details about your vehicle or crash to assist 911 operators to provide the most appropriate emergency services. If you do not want to disclose this information, do not turn the feature on.

Vehicle Health Report (If Equipped, United States Only)

WARNING

Always follow scheduled maintenance instructions, regularly inspect your vehicle, and seek repair for any damage or problem you suspect. Vehicle Health Report supplements, but cannot replace, normal maintenance and vehicle inspection. Vehicle Health Report only monitors certain systems electronically monitored by your vehicle and will not monitor or report the status of any other system, (such as brake lining wear). Failure to perform scheduled maintenance and regularly inspect your vehicle may result in vehicle damage and serious injury.

Note: *This feature is only available in the United States.*

Note: *Your Vehicle Health Report feature requires activation before use. Visit www.SYNCMyRide.com to register. There is no fee or subscription associated with Vehicle Health Report, but you must register to use this feature.*

Information Provided by: DEALER E-PROCESS

Note: *This feature may not function properly if you have enabled caller ID blocking on your cellular phone. Before running a report, review the Vehicle Health Report Privacy Notice.*

Note: *In order to allow a break-in period for your vehicle, you may not be able to create a Vehicle Health Report until your vehicle odometer has reached 200 miles.*

Note: *Cellular phone and SMS charges may apply when making a report.*

Register for Vehicle Health Report and set your report preferences at www.SYNCMyRide.com. After registering, you can request a Vehicle Health Report (inside your vehicle). Return to your account at www.SYNCMyRide.com to view your report. You can also choose for SYNC to remind you automatically to run reports at specific mileage intervals.

The system allows you to check your vehicle's overall health in the form of a diagnostic report card. The Vehicle Health Report contains valuable information, for example:

- Vehicle diagnostic information
- Scheduled maintenance
- Open recalls and Field Service Actions
- Items noted during vehicle inspections by an authorized dealer that still need servicing.

You can run a vehicle health report after your vehicle has been running a minimum of 60 seconds. Choose one of the following options.

To use voice commands, press the voice button and when prompted say:

Voice command	Action and Description
Vehicle Health (Report)	The system will run a vehicle health report of your vehicle's diagnostic systems and send the results to Ford where it combines with scheduled maintenance information, open recalls, other field service actions and vehicle inspection items that still need servicing by an authorized dealer.

To use the screen, press the phone button, then scroll to:

Message	Action and Description
Vehicle Health	Press the **OK** button.
Select one of the following:	
Auto On?	Press the **OK** button and select on or off. Select On to have SYNC automatically prompt you to run a health report at certain mileage intervals.*
Report Interval	Scroll to select between 5000, 7500 or 10000-mile intervals. Select your desired option and press the **OK** button.

Information Provided by: DEALER E-PROCESS

Message	Action and Description
Run Report	Press the **OK** button for SYNC to run a health report of your vehicle's diagnostic systems and send the results to Ford where it combines with scheduled maintenance information, open recalls, other field service actions and vehicle inspection items that still need servicing by an authorized dealer.
Return	Exit the current menu.

*You must first turn this feature on before you can select the desired mileage interval.

Vehicle Health Report Privacy Notice

When you create a Vehicle Health Report, Ford Motor Company may collect your cellular phone number (to process your report request) and diagnostic information about your vehicle. Certain versions or updates to Vehicle Health Report may also collect more vehicle information. Ford may use your vehicle information it collects for any purpose. If you do not want to disclose your cellular phone number or vehicle information, do not run the feature or set up your Vehicle Health Report profile at www.SYNCMyRide.com. See www.SYNCMyRide.com (Vehicle Health Report Terms and Conditions, and Privacy Statement) for more information.

SYNC Services: Traffic, Directions & Information (TDI) (If Equipped, United States Only)

Note: *SYNC Services varies by trim level and model year and may require a subscription. Traffic alerts and turn-by-turn directions available in select markets. Message and data rates may apply. Ford Motor Company reserves the right to change or discontinue this product service at any time without prior notification or incurring any future obligation.*

Note: *SYNC Services requires activation before use. Visit www.SYNCMyRide.com to register and check your eligibility for complimentary services. Standard phone and message rates may apply. Subscription may be required. You must also have the active SYNC Services Bluetooth-enabled cellular phone paired and connected to the system in order to connect to, and use, SYNC Services. See* ***Using SYNC™ With Your Phone*** *(page 272).*

Note: *This feature does not function properly if you have enabled caller ID blocking on your cellular phone. Make sure your cellular phone is not blocking caller ID before using SYNC Services.*

Note: *The driver is ultimately responsible for the safe operation of the vehicle, and therefore, must evaluate whether it is safe to follow the suggested directions. Any navigation features provided are only an aid. Make your driving decisions based on your observations of local conditions and existing traffic regulations. Do not follow the route suggestions if doing so would result in an unsafe or illegal maneuver, place you in an unsafe situation, or if you would be directed into an area that you consider unsafe. Maps used by this system may be inaccurate because of errors, changes in roads, traffic conditions or driving conditions.*

Information Provided by: DEALER E-PROCESS

Note: *When you connect, the service uses GPS technology and advanced vehicle sensors to collect your vehicle's current location, travel direction and speed to help provide you with the directions, traffic reports, or business searches you request. Further, to provide the services you request, for continuous improvement, the service may collect and record call details and voice communications. For more information, see SYNC Services Terms and Conditions at www.SYNCMyRide.com. If you do not want Ford or its service providers to collect your vehicle travel information or other information identified in the Terms and Conditions, do not subscribe or use the service.*

SYNC Services uses advanced vehicle sensors, integrated GPS technology and comprehensive map and traffic data, to give you personalized traffic reports, precise turn-by-turn directions, business search, news, sports, weather and more. For a complete list of services, or to learn more, please visit www.SYNCMyRide.com.

Connecting to SYNC Services Using Voice Commands

Press the voice button and when prompted say:

Voice command	Action and Description
Services	This initiates an outgoing call to SYNC Services using your paired and connected Bluetooth-enabled cellular phone. Once you connect to the service, follow the voice prompts to request the desired service, for example traffic or directions.
Once you are connected to SYNC Services, you can also say the following:	
(what are my (options | choices) | what can I say | [available] commands)	Receive a list of available services from which to choose.
Services	To return to the Services main menu.
Help	Receive system help.

You can say any of the voice commands that appear within open and close brackets that are separated by |. For example, where (options | choices) appears you say either; options or choices.

You must say any of the voice commands that appear outside of open and close brackets. For example, where; what are my (options | choices) appears, you must say; what are my, followed by either, options or choices.

You do not need to say words that appear within square brackets. For example, for where (what can I say [available] commands) appears, you can say, what can I say commands.

Information Provided by: DEALER E-PROCESS

Connecting to SYNC Services Using the Phone Menu

Press the phone button, then scroll to:

Message	Action and Description
SYNC Apps	Press the **OK** button.
Services	1. Press the **OK** button. The display indicates the system is connecting. 2. Press the **OK** button again. SYNC initiates the call to the Services portal. 3. Once you connect to the service, follow the prompts to request the desired service, for example traffic or directions.

Receiving Turn-by-Turn Directions

When connected to SYNC Services, press the voice button and when prompted say:

Voice command	Action and Description
Directions	To receive directions to a location. Once you select your destination, the system uploads your current vehicle location, calculates a route based on current traffic conditions and sends it back to your vehicle. After the route download is complete, the phone call automatically ends. You then receive audible and visual driving instructions as you travel toward your destination.
Business search	To find a business or type of business. Select your destination, the system uploads your current vehicle location, calculates a route based on current traffic conditions and sends it back to your vehicle. After the route download is complete, the phone call automatically ends. You then receive audible and visual driving instructions as you travel toward your destination.
You can also say the following:	
Search near me	To find the closest business or type of business to your location, within business search.
Operator	If you need further assistance in finding a location at any time within a Directions or Business search and need to speak with a live operator.

Information Provided by:
DEALER E-PROCESS

Voice command	Action and Description
	The live operator can assist you by searching for businesses by name or by category, residential addresses by street address or by name or specific street intersections. The system may prompt you to speak with an operator when it has difficulty matching your voice request. Operator Assist is a feature of your SYNC Services subscription. For more information on Operator Assist, visit www.SYNCMyRide.com/support.
Yes *	If you miss a turn, SYNC automatically asks if you want the route updated. Say yes when prompted and the system sends a new route to your vehicle.

* During an active route.

Disconnecting from SYNC Services

To disconnect from SYNC services, say:

Voice command	Action and Description
Goodbye	From the SYNC Services main menu, or press and hold the phone button on the steering wheel.

SYNC Services quick tips

SYNC Services quick tips	
Personalizing	You can personalize your Services feature to provide quicker access to your most used or favorite information. You can save address points, for example work or home. You can also save favorite information like sports teams or a news category. You can learn more about personalization by logging onto www.SYNCMyRide.com.
Push to interrupt	Press the voice button at any time while connected to SYNC Services to interrupt a voice prompt or an audio clip and say your voice command.
Portable	Your subscription is associated with your Bluetooth-enabled cellular phone number, not your VIN (Vehicle Identification Number). You can pair and connect your phone to any vehicle equipped with SYNC Services and continue enjoying your personalized services.

Information Provided by:
DEALER E-PROCESS

SYNC Services quick tips	
	You can even access your account outside your vehicle. Just use the number on your phone's call history. Traffic and Directions features do not function properly but information services and the 411 connect and text message features are available.

SYNC™ APPLINK™

SYNC Mobile Apps

Note: *You must pair and connect your smartphone to SYNC to access AppLink.*

Note: *iPhone users need to connect the phone to the USB port in order to start the application.*

Note: *The AppLink feature is not available if your vehicle is equipped with the MyFord Touch system.*

Note: *Depending on your display type, you can access AppLink from the media menu, the phone menu, or by using voice commands. Once an app is running through AppLink, you can control main features of the app through voice commands and steering wheel controls.*

To Access Using the Phone Menu

Press the phone button to access the SYNC phone menu on-screen. You can then scroll to:

Menu item	
Mobile Apps	Press **OK** to access a list of available applications.
	Scroll through the list of available applications and press OK to select a particular app. Once an app is running through SYNC, you can access an app's menu by pressing the **MENU** button to first access the SYNC menu.

Scroll until the app name followed by "Menu", is displayed (such as, sticher Menu), then press **OK**. From here, you can access an application's features, such as Thumbs up and Thumbs down.

For more information, please visit:

Website
www.SYNCMyRide.com

To Access Using the Media Menu

Press the **AUX** button on the center console.

Information Provided by: DEALER E-PROCESS

Press the Menu button to the SYNC menu and scroll to:

Menu item	Action and description
SYNC-Media	Press the **OK** button.
Mobile Apps	Press the **OK** button and scroll through the list of available applications and select your desired app.

Scroll until the app name followed by "Menu", is displayed (such as, Stitcher Menu), then press **OK**. From here, you can access an application's features, such as Thumbs up and Thumbs down.

For more information, please visit:

Website
www.SYNCMyRide.com

To Access Using Voice Commands

Press the voice button and when prompted say:

Voice command	Action and description
Mobile Apps	Say the name of the application after the tone. The app should start. While an app is running through SYNC, you can press the voice button and speak commands specific to the app, for example, "Playlist Road Trip".
You can also say the following:	
The name of an app (such as Stitcher) followed by "help".	To discover the available voice commands.

USING SYNC™ WITH YOUR MEDIA PLAYER

You can access and play music from your digital music player over your vehicle's speaker system using the system's media menu or voice commands. You can also sort and play your music by specific categories, for example artist and album.

Note: *The system is capable of indexing up to 6,000 songs.*

SYNC is capable of hosting nearly any digital media player including: iPod®, Zune™, plays from device players, and most USB drives. SYNC also supports the following audio formats MP3, WMA, WAV and ACC.

Connecting Your Digital Media Player to the USB Port

Note: *If your digital media player has a power switch, make sure you switch it on before plugging it in.*

Information Provided by: DEALER E-PROCESS

To Connect Using Voice Commands

Plug the device into the USB port. See **USB Port** (page 266).

Press the voice button and when prompted say:

Voice command	Action and Description
USB [1]	You can now play music by saying any of the appropriate voice commands. See Media voice commands.

You do not need to say words that appear within square brackets. For example, for where USB[1]appears, you can say USB or USB one.

To Connect Using the System Menu

Plug the device into the USB port. See **USB Port** (page 266).

Press the **AUX** button, then the **Menu** button to enter the Media Menu.

You can then scroll to:

Message	Action and Description
Select Src	Press the **OK** button.
USB	Press the **OK** button. Depending on how many digital media files are on your connected device, the following message may appear in the radio display. Indexing...
When indexing is complete, the screen returns to the Play menu. You can then select one of the following:	
Play all	
Artists	
Albums	
Genres	
Playlists	
Songs	
Browse USB	
Similar music	
Return	Exit the current menu.

Information Provided by: DEALER E-PROCESS

What's Playing?

When a track is playing, you can ask the system to tell you what is currently playing.

Press the voice button and when prompted say:

Voice command	Action and Description
Whats This? | Whats Playing?	The system reads the metadata tags of the playing track, and if the metadata tags are populated, the system will tell you what track is playing.

You can say any of the voice commands that appear within open and close brackets that are separated by \|. For example, where; (what's \| what is) appears you say; what's or what is.

You must say any of the voice commands that appear outside of open and close brackets. For example, where text shows: (what's \| what is) playing, you must say; "what's playing" or "what is playing".

Media Voice Commands

Press the voice button and when prompted say any of the following:

Voice command	
USB [1]	
You can then say any of the following	
[Phone] Connections | [Media] Connections | [Bluetooth] Connections	
Pause	
Play	
Play All	
Play Artist ___	1,2
Play Album ___	1,2
Play Genre ___	1,2
[Play] Next Folder	3
[Play] Next Track | [Play] Next Song	

Voice command	
Play Playlist ___	1,2
[Play] Previous Folder	3
[Play] Previous Track | [Play] Previous Song	
[Play] Next Track | [Play] Next Song	1,2
Repeat [On]	
Repeat Off	
Shuffle [On]	
Shuffle Off	
Search Album ___	1,2
Search Artist ___	1,2

Information Provided by: DEALER E-PROCESS

Voice command		
Search Genre ___	The system searches all the data from your indexed music and, if available, begins to play the chosen type of music. You can only play genres of music which are present in the GENRE metadata tags that you have on your digital media player.	1,2
Search Track ___ | Search Song ___	The system searches for a specific artist/track/album from the music indexed through the USB port.	1,2
Refine album ___	This allows you to make your previous command more specific. By using this command you can filter though a previous selection, such as an artist to play only specific album.	1,2
Similar Music	The system compiles a playlist and then plays similar music to what is currently playing from the USB port using indexed metadata information.	

Voice command	
Autoplay Off	
Autoplay [on]	Turn autoplay on to listen to music processed during indexing. Turn autoplay off to allow the indexing process to finish before the system plays any of your music.

[1] ___ is a dynamic listing, meaning that it could be the name of anything, such as a group, artist or song. For example you could say "Play artist The Beatles".

[2] This voice command is not available until indexing is complete.

[3] This voice command is only available in folder mode.

Bluetooth Audio Command Guide

Press the voice button and say:

Voice command
Bluetooth Audio
You can then say any of the following:
[Phone] Connections | [Media] Connections | [Bluetooth] Connections
Pause
Play
[Play] Next Track | [Play] Next Song
[Play] Previous Track | [Play] Previous Song

Media Menu Features

The media menu allows you to select your media source, how to play your music, for example by artist, genre, shuffle or repeat, and to add, connect or delete devices.

Information Provided by: DEALER E-PROCESS

Press the **AUX** button, then the **Menu** button to enter the Media Menu.

You can then scroll to:

Message		Action and Description
Play Menu		Play your music by artist, album, genre, playlists, tracks, similar music or to simply, play all. You can also choose to Explore USB to view the supported digital music files on your playing device. See Play Menu later in this section for more information.
Select one of the following:		
Select Src	USB	Press the **OK** button to access music plugged into your USB port. You can also plug in devices to charge them (if supported by your device). Once connected, the system indexes any readable media files.[1]
	Bluetooth Audio	Press the **OK** button. This is a phone-dependent feature that allows you to stream music playing on your Bluetooth-enabled phone. If supported by your device, you can press seek to play the previous or next track.
	Line in	Press the **OK** button to select and play music from your portable music player over your vehicle's speakers.[2]
Media Player Settings	Choose to shuffle or repeat your music and select your Auto-play settings. Once you turn these selections on, they remain on until you turn them off. Press **SEEK** to play the previous or next track.[3]	
	Shuffle	Press the **OK** button to shuffle available media files in the current playlist. To shuffle all media tracks, you must select Play All in the play menu and then select Shuffle.
	Repeat	Press the **OK** button to repeat any song.

Information Provided by:
DEALER E-PROCESS

Message		Action and Description
	Autoplay	Press the **OK** button to turn autoplay on to listen to music processed during indexing. Turn autoplay off to allow the indexing process to finish before the system plays any of your music.[4]
Mobile Apps	Interact with SYNC-capable mobile applications on your smartphone.	
Sys Settings	Access available Bluetooth Device menu listings as well as Advanced menu listings.	
Exit	Press **OK** to exit the media menu.	

[1]The time required to complete this depends on the size of the media the system needs to index. If autoplay is on, you can listen to media processed during indexing. If autoplay is off, you cannot listen to music until the system finishes indexing media. SYNC is capable of indexing thousands of average size media and notifies you if it reaches the maximum indexing file size.

[2]If you have already connected a device to the USB port, you cannot access the line in feature. Some digital media players require both USB and line in ports to stream data and music separately.

[3]Some digital media players require both USB and line in ports to stream data and music separately.

[4]Indexing times can vary from device to device and with regard to the number of songs the system needs to process.

Accessing Your Play Menu

This menu allows you to select and play your media by artist, album, genre, playlist, track, similar music or even to explore what is on your USB device.

Make sure that your device is plugged into the USB port and is turned on.

Press the **AUX** button, then the **Menu** button to enter the Media Menu.

You can then scroll to select:

Message	Action and Description
Play Menu	Press the **OK** button.
If there are no media files to access, the display indicates there is no media. If there are media files, you have the following options:	
Play all	Press the **OK** button. The first track title appears in the display.

Information Provided by: DEALER E-PROCESS

Message	Action and Description
	Play all indexed media (tracks) from your playing device in flat file mode, one at a time in numerical order.
Artists	Sort all indexed media by artist. Once selected, the system lists and then plays all artists and tracks alphabetically. If there are fewer than 255 indexed artists, the system lists them alphabetically in flat file mode. If there are more than 255, the system categorizes them alphabetically. 1. Press the **OK** button. You can select to play all artists or any indexed artist. 2. Scroll to choose the desired artist. Press the **OK** button.
Albums	Sort all indexed media by albums. If there are fewer than 255 indexed albums, the system lists them alphabetically in flat file mode. If there are more than 255, the system categorizes them alphabetically. 1. Press the **OK** button. You can enter the album menu and select from playing all albums or from any individual indexed album. 2. Scroll to choose the desired album. Press the **OK** button.
Genres	Sort indexed music by genre (category) type. SYNC lists the genres alphabetically in flat file mode. If there are more than 255, the system categorizes them alphabetically. 1. Press the **OK** button. 2. Scroll to select the desired genre. Press the **OK** button.
Playlists	Access your playlists from formats ASX, M3U, WPL or MTP. The system lists your playlists alphabetically in flat file mode. If there are more than 255, the system categorizes them alphabetically. 1. Press the **OK** button. 2. Scroll to select the desired playlist. Press the **OK** button.
Songs	Search for and play a specific indexed track. SYNC lists your tracks alphabetically in flat file mode. If there are more than 255, the system categorizes them alphabetically. 1. Press the **OK** button. 2. Scroll to select the desired track. Press the **OK** button.

Information Provided by:
DEALER E-PROCESS

Message	Action and Description
Browse USB	Explore all supported digital media on your media device connected to the USB port. You can only view media content which is compatible with SYNC; other files saved are not visible. 1. Press the **OK** button. 2. Scroll to explore indexed media on your flash drive.
Similar music	Play music similar to what is currently playing from the USB port. The system uses the metadata information of each song to compile a playlist for you.* 1. Press the **OK** button. 2. The system creates a new list of similar songs and begins playing. This feature does not include tracks with incomplete metadata information. Press the **OK** button.
Return	Exit the current menu.

*With certain playing devices, if your metadata tags are not populated, the tracks are not available in voice recognition, play menu or similar music. However, if you place these tracks onto your playing device in "Mass Storage Device Mode", they are available in voice recognition, play menu browsing and similar music. The system places Unknown items into any unpopulated metadata tag.

System Settings

System settings provide access to your Bluetooth Devices and Advanced menu features.

Bluetooth Devices

The Bluetooth Devices menu allows you to enable, disable, add, connect and delete a Bluetooth device.

Press the **AUX** button, then the **Menu** button to enter the Media Menu.

You can then scroll to:

Message	Action and Description
Sys Settings	Press the **OK** button.
Bluetooth device	Press the **OK** button.
You can then select one of the following:	
Add Device	Pair more devices to the system.*

Information Provided by: DEALER E-PROCESS

Message	Action and Description
	1. Press the **OK** button. When find SYNC appears in the display, press the **OK** button again. 2. Follow the directions in your phone's manual to put your phone into discovery mode. A six-digit PIN appears in the display. 3. When prompted on your phone's six-digit display, enter the PIN.
Connect BT	Connect a previously paired Bluetooth-enabled phone. 1. Press **OK** to select and view a list of devices. 2. Scroll until the desired device is chosen and press **OK** to connect the device.
Bluetooth On and Off	Turn the Bluetooth feature on and off.** 1. Press the **OK** button and scroll to toggle between on and off. 2. Make a selection and press the **OK** button.
Delete	Delete a paired media device. 1. Press the **OK** button and scroll to select the device. 2. Press the **OK** button to confirm.
Delete all	Delete all previously paired devices. 1. Press the **OK** button. 2. Press the **OK** button to confirm.
Return	Exit the current menu.

*This is a speed-dependent feature. It is only available when your vehicle is traveling at 3 mph (5 km/h) or less.

**Setting Bluetooth to off disconnects all Bluetooth devices and turns off all Bluetooth features.

Advanced

The Advanced menu allows you to access and set prompts, languages, defaults and perform a master reset.

Press the **AUX** button, then the **Menu** button to enter the Media Menu.

Information Provided by:
DEALER E-PROCESS

You can then scroll to:

Message	Action and Description
Sys Settings	Press the **OK** button.
Bluetooth device	Press the **OK** button.
You can then select one of the following:	
Confirmation Prompts	Have SYNC guide you by asking questions, helpful hints or ask you for a specific action. 1. Press the **OK** button and scroll to toggle between on and off. 2. Make a selection and press the **OK** button. SYNC takes you back to the Advanced menu.
Language	Choose from the available languages. The displays and prompts are in the selected language. 1. Press the **OK** button and scroll through the available languages. 2. Press the **OK** button when the desired language appears in the display. 3. If you change the language setting, the display indicates that the system is updating. When complete, SYNC takes you back to the Advanced menu.
Factory Defaults	Return to the factory default settings. This selection does not erase your indexed information, for example phonebook, call history, text messages and paired devices. 1. Press the **OK** button. 2. Press the **OK** button. When restore defaults appears in the display, press the **OK** button again to confirm.
Master reset	Completely erase all information stored on SYNC. All phonebook, call history, text messages and all paired devices will be deleted and the system will return to the factory default settings.
Install Applications	Download available software applications through the USB port.
Return	Exit the current menu.

Information Provided by:
DEALER E-PROCESS

SYNC™ TROUBLESHOOTING

Your SYNC system is easy to use. However, should questions arise, see the tables below.

Use the website at any time to check your phone's compatibility, register your account and set preferences as well as access a customer representative via an online chat (during certain hours). Visit www.SYNCMyRide.com, www.SYNCMyRide.ca or www.syncmaroute.ca for more information.

Phone issues		
Issue	**Possible cause(s)**	**Possible solution(s)**
There is excessive background noise during a phone call.	The audio control settings on your phone may be affecting SYNC performance.	Review your phone's manual about audio adjustments.
During a call, I can hear the other person but they cannot hear me.	This may be a possible phone malfunction.	Try turning off the device, resetting the device, removing the device's battery, then trying again.
SYNC is not able to download my phonebook.	This is a phone-dependent feature. This may be a possible phone malfunction.	Go to the website to review your phone's compatibility. Try turning off the device, resetting the device or removing the device's battery, then trying again. Try pushing your phonebook contacts to SYNC by using the Add Contacts feature. Use the SYNCmyphone feature available on the website.
The system says Phonebook Downloaded but the phonebook in SYNC is empty or missing contacts.	This may be a limitation on your phone's capability.	Try pushing your phonebook contacts to SYNC by using the Add Contacts feature. If the missing contacts are stored on your SIM card, try moving them to the device memory. Remove any pictures or special ring tones associated with the missing contact.

Information Provided by:
DEALER E-PROCESS

Phone issues		
Issue	**Possible cause(s)**	**Possible solution(s)**
		Depending upon your phone, you may have to grant SYNC permission to access your phonebook contacts. Make sure to confirm when prompted by your phone during the phonebook download.
I am having trouble connecting my phone to SYNC.	This is a phone-dependent feature. This may be a possible phone malfunction.	Go to the website to review your phone's compatibility. Try turning off the device, resetting the device or removing the device's battery, then trying again. Try deleting your device from SYNC, deleting SYNC from your device and trying again. Check the security and auto accept and prompt always settings relative to the SYNC Bluetooth connection on your phone. Update your device's firmware. Turn off the Auto phonebook download setting.
Text messaging is not working on SYNC.	This is a phone-dependent feature. This may be a possible phone malfunction.	Go to the website to review your phone's compatibility. Try turning off the device, resetting the device or removing the device's battery, then trying again.

Information Provided by:
DEALER E-PROCESS

USB and media issues		
Issue	**Possible cause(s)**	**Possible solution(s)**
I am having trouble connecting my device.	This may be a possible device malfunction.	Try turning off the device, resetting the device, removing the device's battery, then trying again. Make sure you are using the manufacturer's cable. Make sure you insert the USB cable correctly into the device and the USB port. Make sure that the device does not have an auto-install program or active security settings.
SYNC does not recognize my device when I turn on the car.	This is a device limitation.	Make sure you are not leaving the device in your vehicle during very hot or cold temperatures.
Bluetooth audio does not stream.	This is a phone-dependent feature. The device is not connected.	Review the device compatibility chart on the SYNC website to confirm your phone supports the Bluetooth audio streaming function. Make sure you correctly connect the device to SYNC, and that you have pressed play on your device.
SYNC does not recognize music that is on my device.	Your music files may not contain the correct artist, song title, album or genre information. The file may be corrupted. The song may have copyright protection, which does not allow it to play.	Make sure that all song details are populated. Some devices require you to change the USB settings from mass storage to MTP class.

Information Provided by:
DEALER E-PROCESS

Vehicle Health Report and Services (Traffic, Directions and Information) issues		
Issue	**Possible cause(s)**	**Possible solution(s)**
I received a text that I did not activate Vehicle Health Report.	You did not activate your account on the website. You may have the wrong VIN (vehicle identification number) listed.	This is a free feature, but you must first register online to use it. Make sure that your VIN is correctly listed in your account.
I am unable to retrieve the report on the website, or I receive a system error.	The preferred dealer information did not load correctly.	When you register your account, you must choose a preferred dealer. If it already lists a dealer, try selecting another dealer and logging out. Log back in, change it back to your preferred dealer, and retrieve the report.
I am unable to submit a report.	This could be due to your phone's compatibility. Bad signal strength. You did not register your phone correctly on the website.	Update your cellular number in your account on the website. Make sure you have full signal strength and that your Bluetooth volume level has been turned up. Make sure the currently connected phone is registered on your SYNCMyRide account. Try deleting your phone and performing a clean pairing.
I heard a commercial when I tried to use Traffic, Directions and Information.	You did not activate this phone for this service. Your phone has ID blocker active.	This is a free feature, but you must first register online to use it. Turn off ID blocker on your phone as the system recognizes you by your phone number. Make sure the currently connected phone is the same one that is registered on your SYNCMyRide account.

Information Provided by:
DEALER E-PROCESS

Voice command issues		
Issue	**Possible cause(s)**	**Possible solution(s)**
SYNC does not understand what I am saying.	You may be using the wrong voice commands. You may be speaking too soon or at the wrong time.	Review the phone voice commands and the media voice commands at the beginning of their respective sections. After pressing the voice icon, wait until after the tone sounds and Listening appears before saying a command. Any command spoken before this does not register with the system.
SYNC does not understand the name of a song or artist.	You may be using the wrong voice commands. You may be saying the name differently than the way you saved it. The system may not be reading the name the same way you are saying it.	Review the media voice commands at the beginning of the media section. Say the song or artist exactly as listed. If you say "Play Artist Prince", the system does not play music by Prince and the Revolution or Prince and the New Power Generation. Make sure you are saying the complete title, such as "California remix featuring Jennifer Nettles". If the song titles are in all CAPS, you have to spell them. LOLA requires you to say "L-O-L-A". Do not use special characters in the title. The system does not recognize them.
SYNC does not understand or is calling the wrong contact when I want to make a call.	You may be using the wrong voice commands. You may be saying the name differently than the way you saved it.	Review the Phone voice commands at the beginning of the phone section.

Information Provided by:
DEALER E-PROCESS

Voice command issues		
Issue	**Possible cause(s)**	**Possible solution(s)**
	The system may not be reading the name the same way you are saying it. Contacts in your phonebook may be very short and similar, or they may contain special characters. Your phonebook contacts may be in CAPS.	Make sure you are saying the contacts exactly as they are listed. For example, if you save a contact as Joe Wilson, say "Call Joe Wilson". Using the SYNC phone menu, open the phonebook and scroll to the name SYNC is having trouble understanding. SYNC will read the name to you, giving you some idea of the pronunciation SYNC is expecting. The system works better if you list full names, such as "Joe Wilson" rather than "Joe". Do not use special characters, such as 123 or ICE, as the system does not recognize them. If a contact is in CAPS, you have to spell it. JAKE requires you to say "Call J-A-K-E".

AppLink issues		
Issue	**Possible cause(s)**	**Possible solution(s)**
AppLink Mobile Applications: When I select "Find New Apps," SYNC does not find any applications.	An AppLink capable phone is not connected to SYNC.	Ensure you have a compatible smartphone; an Android with OS 2.3 or higher or an iPhone 3GS or newer with iOS 5.0 or higher. Additionally, ensure your phone is paired and connected to

Information Provided by:
DEALER E-PROCESS

AppLink issues		
Issue	**Possible cause(s)**	**Possible solution(s)**
		SYNC in order to find AppLink-capable apps on your device. iPhone users must also connect to SYNC's USB port with an Apple USB cable.
My phone is connected, but I still cannot find any apps.	AppLink-enabled apps are not installed and running on your mobile device.	Ensure you have downloaded and installed the latest version of the app from your phone's app store. Ensure the app is running on your phone. Some apps require you to register or login on the app on the phone before using them with AppLink. Also, some may have a "Ford SYNC" setting, so check the app's settings menu on the phone.
My phone is connected, my app(s) are running, but I still cannot find any apps.	Sometime apps do not properly close and re-open their connection to SYNC, over ignition cycles, for example.	Closing and restarting apps may help SYNC find the application if you cannot discover it inside the vehicle. On an Android device, if apps have an "Exit' or 'Quit' option, select that then restart the app. If the app does not have that option, you can also manually "Force Close" the app by going to the phone's settings menu, selecting 'Apps.' then finding the particular app and choosing 'Force stop.' Don't forget to restart the app afterwards, then select "Find New Apps" on SYNC.

Information Provided by:
DEALER E-PROCESS

AppLink issues		
Issue	**Possible cause(s)**	**Possible solution(s)**
		On an iPhone with iOS7+, to force close an app, double tab the home button then swipe up on the app to close it. Tab the home button again, then select the app again to restart it. After a few seconds, the app should then appear in SYNC's Mobile App's Menu.
My Android phone is connected, my app(s) are running, I restarted them, but I still cannot find any apps.	There is a bluetooth bug on some order versions of the Android OS that may cause apps that were found on your previous vehicle drive to not be found again if you have not turned off bluetooth.	Reset the Bluetooth on your phone by turning it off and then turning Bluetooth back on. If you are in your vehicle, SYNC should be able to automatically re-connect to your phone if you press the "Phone" button.

Information Provided by:
DEALER E-PROCESS

AppLink issues		
Issue	**Possible cause(s)**	**Possible solution(s)**
My iPhone phone is connected, my app is running, I restarted the app but I still cannot find it on SYNC.	The USB connection to SYNC may need to be reset.	Unplug the USB cable from the phone, wait a moment, and plug the USB cable back in to the phone. After a few seconds, the app should appear in SYNC's Mobile Apps Menu. If not, "Force Close" the application and restart it.
I have an Android phone. I found and started my media app on SYNC, but there is no sound or the sound is very low.	The bluetooth volume on the phone may be low.	Try increasing the Bluetooth volume of the device by using the device's volume control buttons which are most often found on the side of the device.
I can only see some of the AppLink apps running on my phone listed in SYNC's Mobile Apps Menu.	Some Android devices have a limited number of bluetooth ports apps can use to connect. If you have more AppLink apps on your phone than the number of availble Bluetooth ports, you will not see all of your apps listed in SYNC's mobile apps menu.	Force close or uninstall the apps you do not want SYNC to find. If the app has a "Ford SYNC" setting, disable that setting in the app's settings menu on the phone.

Information Provided by:
DEALER E-PROCESS

For a complete listing of the accessories that are available for your vehicle, please contact your authorized dealer or visit the online store web site:

Web Address (United States)
www.Accessories.Ford.com

Web Address (Canada)
www.Accessories.Ford.ca

Ford Accessories are available for your vehicle through an authorized Ford dealer. Ford Motor Company will repair or replace any properly authorized dealer-installed Ford Original Accessory found to be defective in factory-supplied materials or workmanship during the warranty period, as well as any component damaged by the defective accessories.

Ford Motor Company will warrant your accessory through the warranty that provides the greatest benefit:

- 24 months, unlimited miles.
- The remainder of your new vehicle limited warranty.

Contact an authorized dealer for details and a copy of the warranty.

Exterior style

- Bumper protectors.
- Graphics kit.
- Rear spoiler.
- Side window deflectors.
- Splash guards.
- Vehicle covers.
- Wheels.

Interior style

- All-weather floor mats.
- Ambient lighting.
- Gear shift knob.
- Lighted door sill plates.
- Premium carpeted floor mats.
- Rear seat entertainment*.

Lifestyle

- Ash cup and smokers packages.
- Cargo organization.
- Roof racks and carriers*.

Peace of mind

- Bumper-mounted parking sensor*.
- Keyless entry keypad.
- Locking fuel plug.
- Remote start.
- Vehicle security systems.
- Wheel locks.

*Ford Licensed Accessory. The accessory manufacturer designs, develops and therefore warrants Ford Licensed Accessories, and does not design or test these accessories to Ford Motor Company engineering requirements. Contact an authorized Ford dealer for the manufacturer's limited warranty details, and request a copy of the Ford Licensed Accessories product limited warranty from the accessory manufacturer.

For maximum vehicle performance, keep the following information in mind when adding accessories, equipment, passengers and luggage to your vehicle:

Information Provided by:
DEALER E-PROCESS

- Do not exceed the total weight capacity of the vehicle or of the front or rear axle (GVWR or GAWR as indicated on the Safety Compliance Certification label). Ask an authorized dealer for specific weight information.
- The Federal Communications Commission (FCC) and Canadian Radio Telecommunications Commission (CRTC) regulate the use of radio transmitter-equipped mobile communications systems, for example, two-way radios, telephones and theft alarms. Any such equipment should comply with Federal Communications Commission (FCC) and Canadian Radio Telecommunications Commission (CRTC) regulations and an authorized dealer should install this equipment.
- An authorized dealer should install mobile communications systems. Improper installation may harm the operation of your vehicle, particularly if their manufacturer did not design the mobile communication system specifically for automotive use.
- If you or an authorized dealer add any non-Ford electrical or electronic accessories or components to your vehicle, you may adversely affect the performance of other electrical systems in the vehicle.

Information Provided by:
DEALER E-PROCESS

PROTECT YOURSELF FROM THE RISING COST OF VEHICLE REPAIRS WITH A FORD EXTENDED SERVICE PLAN.

SERVICE PLANS (U.S. Only)

More than 32 million Ford owners have discovered the powerful protection of Ford Extended Service Plan. It is the extended service plan backed by Ford Motor Company, and provides peace of mind protection beyond the New Vehicle Limited Warranty coverage.

Ford ESP Can Quickly Pay for Itself

One service bill – the cost of parts and labor – can easily exceed the price of your Ford Extended Service Plan. With Ford ESP you minimize your risk for unexpected repair bills and rising repair costs.

Up to 1,000+ Covered Vehicle Components

There are four core Extended Service Plans with different levels of coverage. Ask your authorized dealer for details.

1. PremiumCARE - Our most comprehensive coverage. With over 1,000 covered components, this plan is so complete that we generally only discuss what's not covered.
2. ExtraCARE - Covers 113 components, and includes many high-tech items.
3. BaseCARE - Covers 84 components.
4. PowertrainCARE - Covers 29 critical components.

Ford Extended Service Plan is honored by all authorized Ford dealers in the U.S., Canada and Mexico. It is the extended service plan authorized and backed by Ford Motor Company.

That means you get:

- Reliable, quality service at any Ford or Lincoln dealership
- Repairs performed by factory trained technicians, using genuine parts

Rental Car Reimbursement

1st day Rental Benefit

You take advantage of replacement transportation if your vehicle is at your authorized dealer for same day covered repairs.

Extended Rental Benefits

If your vehicle is kept overnight for covered repairs, you are eligible for rental car coverage, including bumper to bumper warranty repairs, and Field Service Actions.

Roadside Assistance

Exclusive 24/7 roadside assistance, including:

- Towing, flat-tire change and battery jump starts
- Out of fuel and lock-out assistance.
- Travel expense reimbursement for lodging, meals and rental car.
- Destination assistance for taxi, shuttle, rental car coverage and emergency transportation.

Transferable Coverage

If you sell your vehicle before your Ford Extended Service Plan coverage expires, you can transfer any remaining coverage to the new owner. Whenever you sell your vehicle, prospective buyers may have a higher degree of confidence that vehicle was properly maintained with Ford ESP, thereby improving resale value.

Information Provided by:
DEALER E-PROCESS

Avoid the Rising Cost of Properly Maintaining Your Vehicle!

Ford Extended Service Plan also offers a Premium Maintenance Plan that covers all scheduled maintenance, and selected wear items. The coverage is prepaid, so you never have to worry about affording your vehicle's maintenance. It covers regular checkups, routine inspections, preventive care and replacement of select items that require periodic attention for normal wear:

- Windshield wiper blades.
- Spark plugs.
- The clutch disc.
- Brake pads and linings.
- Shock absorbers.
- Struts.
- Engine Belts.
- Engine coolant hoses, clamps and o-rings.
- Diesel exhaust fluid replenishment.

Interest Free Finance Options Available

Take advantage of our interest free installment payment plan. Just a 10% down payment will provide you with an affordable, no interest, no fee payment program allowing you all the security and benefits Ford ESP has to offer while paying over time. You are pre-approved with no credit checks, no hassles! To learn more, call our Ford ESP specialists at 800-367-3377.

Ford ESP
P.O. Box 321067
Detroit, MI 48232

SERVICE PLANS (CANADA ONLY)

You can get more protection for your vehicle by purchasing a Ford Extended Service Plan. Ford Extended Service Plan is the only service contract backed by Ford Motor Company of Canada, Limited. Depending on the plan you purchase, Ford Extended Service Plan provides benefits such as:

- Rental reimbursement.
- Coverage for certain maintenance and wear items.
- Protection against repair costs after your New Vehicle Limited Warranty Coverage expires.
- Roadside Assistance benefits.

There are several Ford Extended Service Plans available in various time, distance and deductible combinations. Each plan is tailored to fit your own driving needs, including reimbursement for towing and rental. When you purchase Ford Extended Service Plan, you receive added peace-of-mind protection throughout Canada, the United States and Mexico, provided by a network of participating authorized Ford Motor Company dealers.

Note: *Repairs performed outside of Canada, the United States and Mexico are not eligible for Ford Extended Service Plan coverage.*

This information is subject to change. For more information, visit your local Ford of Canada dealer or www.ford.ca to find the Ford Extended Service Plan that is right for you.

Information Provided by: DEALER E-PROCESS

GENERAL MAINTENANCE INFORMATION

Why Maintain Your Vehicle?

Carefully following the maintenance schedule helps protect against major repair expenses resulting from neglect or inadequate maintenance and may help to increase the value of your vehicle when you sell or trade it. Keep all receipts for completed maintenance with your vehicle.

We have established regular maintenance intervals for your vehicle based upon rigorous testing. It is important that you have your vehicle serviced at the proper times. These intervals serve two purposes; one is to maintain the reliability of your vehicle and the second is to keep your cost of owning your vehicle down.

It is your responsibility to have all scheduled maintenance performed and to make sure that the materials used meet the specifications identified in this owner's manual. See **Capacities and Specifications** (page 234).

Failure to perform scheduled maintenance invalidates warranty coverage on parts affected by the lack of maintenance.

Why Maintain Your Vehicle at Your Dealership?

Factory-Trained Technicians

Service technicians participate in extensive factory-sponsored certification training to help them become experts on the operation of your vehicle. Ask your dealership about the training and certification their technicians have received.

Genuine Ford and Motorcraft Replacement Parts

Dealerships stock Ford, Motorcraft and Ford-authorized branded re-manufactured replacement parts. These parts meet or exceed our specifications. Parts installed at your dealership carry a nationwide 24-month or unlimited mile (kilometer) parts and labor limited warranty.

If you do not use Ford authorized parts they may not meet our specifications and depending on the part, it could affect emissions compliance.

Convenience

Many dealerships have extended evening and Saturday hours to make your service visit more convenient and they offer one stop shopping. They can perform any services that are required on your vehicle, from general maintenance to collision repairs.

Note: *Not all dealers have extended hours or body shops. Please contact your dealer for details.*

Protecting Your Investment

Maintenance is an investment that pays dividends in the form of improved reliability, durability and resale value. To maintain the proper performance of your vehicle and its emission control systems, make sure you have scheduled maintenance performed at the designated intervals.

Your vehicle is equipped with an information display which displays a message at the proper oil change service interval; the interval is one year or 10000 miles (16000 kilometers) under normal driving conditions.

Information Provided by:
DEALER E-PROCESS

When **ENGINE OIL CHANGE DUE NEXT SERVICE** or **OIL CHANGE REQUIRED** appears in the information display, it is time for an oil change; the oil change must be done within two weeks or 500 miles (800 kilometers) of the **ENGINE OIL CHANGE DUE NEXT SERVICE** or **OIL CHANGE REQUIRED** message appearing. The oil minder system must be reset after each oil change. See **Oil Change Indicator Reset** (page 183).

If your information display resets prematurely or becomes inoperative, you should perform the oil change interval at six months or 5000 miles (8000 kilometers) from your last oil change. Never exceed one year or 10000 miles (16000 kilometers) between oil change intervals.

Your vehicle is very sophisticated and built with multiple, complex, performance systems. Every manufacturer develops these systems using different specifications and performance features. That is why it is important to rely upon your dealership to properly diagnose and repair your vehicle.

Ford Motor Company has recommended maintenance intervals for various parts and component systems based upon engineering testing. Ford Motor Company relies upon this testing to determine the most appropriate mileage for replacement of oils and fluids to protect your vehicle at the lowest overall cost to you and recommends against maintenance schedules that deviate from the scheduled maintenance information.

We strongly recommend the use of only genuine Ford, Motorcraft or Ford-authorized re-manufactured replacement parts engineered for your vehicle.

Additives and Chemicals

This owner's manual and the Ford Workshop Manual list the recommended additives and chemicals for your vehicle. We do not recommend using chemicals or additives not approved by us as part of your vehicle's normal maintenance. Please consult your warranty information.

Oils, Fluids and Flushing

In many cases, fluid discoloration is a normal operating characteristic and, by itself, does not necessarily indicate a concern or that the fluid needs to be changed. However, a qualified expert, such as the factory-trained technicians at your dealership, should inspect discolored fluids that also show signs of overheating or foreign material contamination immediately.

Make sure to change your vehicle's oils and fluids at the specified intervals or in conjunction with a repair. Flushing is a viable way to change fluid for many vehicle sub-systems during scheduled maintenance. It is critical that systems are flushed only with new fluid that is the same as that required to fill and operate the system or using a Ford-approved flushing chemical.

Owner Checks and Services

Make sure you perform the following basic maintenance checks and inspections every month or at six-month intervals.

Information Provided by:
DEALER E-PROCESS

Check every month
Engine oil level.
Function of all interior and exterior lights.
Tires (including spare) for wear and proper pressure.
Windshield washer fluid level.

Check every six months
Battery connections. Clean if necessary.
Body and door drain holes for obstructions. Clean if necessary.
Cooling system fluid level and coolant strength.
Door weatherstrips for wear. Lubricate if necessary.
Hinges, latches and outside locks for proper operation. Lubricate if necessary.
Parking brake for proper operation.
Safety belts and seat latches for wear and function.
Safety warning lamps (brake, ABS, airbag and safety belt) for operation.
Washer spray and wiper operation. Clean or replace blades as necessary.

Multi-Point Inspection

In order to keep your vehicle running right, it is important to have the systems on your vehicle checked regularly. This can help identify potential issues and prevent major problems. We recommend having the following multi-point inspection performed at every scheduled maintenance interval to help make sure your vehicle keeps running great.

Information Provided by:
DEALER E-PROCESS

Multi-Point inspection	
Accessory drive belt(s)	Hazard warning system operation
Battery performance	Horn operation
Clutch operation (manual transmission only)	Radiator, cooler, heater and air conditioning hoses
Engine air filter	Suspension components for leaks or damage
Exhaust system	Steering and linkage
Exterior lamps operation	Tires (including spare) for wear and proper pressure**
Fluid levels*; fill if necessary	Windshield for cracks, chips or pits
For oil and fluid leaks	Washer spray and wiper operation
Half-shaft dust boots	

* Brake, coolant recovery reservoir, automatic transmission and window washer

**If your vehicle is equipped with a temporary mobility kit, check the tire sealant expiration Use By date on the canister. Replace as needed.

Be sure to ask your dealership service advisor or technician about the multi-point vehicle inspection. It is a comprehensive way to perform a thorough inspection of your vehicle. Your checklist gives you immediate feedback on the overall condition of your vehicle.

NORMAL SCHEDULED MAINTENANCE

Your vehicle is equipped with an oil minder system that indicates when the engine oil should be changed under normal operating conditions.

This means you do not have to remember to change the oil on a mileage-based schedule; the vehicle lets you know when an oil change is due by displaying **ENGINE OIL CHANGE DUE** or **OIL CHANGE REQUIRED** in the information display.

Information Provided by: DEALER E-PROCESS

Every 10000 miles (16000 kilometers) or 12 months*
Change engine oil and filter.**
Rotate the tires.
Perform a multi-point inspection (recommended).
Inspect the automatic transmission fluid level. Consult your dealer for requirements.
Inspect the brake pads, shoes, rotors, drums, brake linings, hoses and parking brake.
Inspect the engine cooling system strength and hoses.
Inspect the exhaust system and heat shields.
Inspect the half-shaft boots.
Inspect the steering linkage, ball joints, suspension, tire-rod ends, driveshaft and U-joints. Lubricate any areas with grease fittings.
Inspect the tires, tire wear and measure the tread depth.
Inspect the wheels and related components for abnormal noise, wear, looseness or drag.

* Do not exceed one year or 10000 miles (16000 kilometers) between service intervals.

** Reset the oil minder system after each engine oil and filter change. See **Oil Change Indicator Reset** (page 183).

Other maintenance items[1]	
Every 20000 miles (32000 km)	Replace cabin air filter.
Every 30000 miles (48000 km)	Replace engine air filter.
At 100000 miles (160000 km)	Change engine coolant.[2]
Every 100000 miles (160000 km)	Replace spark plugs.
	Inspect accessory drive belt(s).[3]
Every 150000 miles (240000 km)	Change transmission fluid.
	Replace accessory drive belt(s).[4]

Information Provided by: DEALER E-PROCESS

Other maintenance items[1]	
	Replace timing belt (1.0L, 1.6L engine).
	Replace oil pump drive belt (1.0L engine).

[1] Additional maintenance items can be performed within 3000 miles (4800 kilometers) of the last engine oil and filter change. Do not exceed the designated distance for the interval.

[2] Initial replacement at six years or 100000 miles (160000 kilometers), then every three years or 50000 miles (80000 kilometers).

[3] After initial inspection, inspect every other oil change until replaced.

[4] If not replaced within the last 100000 miles (160000 kilometers).

Information Provided by:
DEALER E-PROCESS

SPECIAL OPERATING CONDITIONS SCHEDULED MAINTENANCE

If you operate your vehicle **primarily** in any of the following conditions, you need to perform additional maintenance as indicated. If you operate your vehicle occasionally under any of these conditions, it is not necessary to perform the additional maintenance. For specific recommendations, see your dealership service advisor or technician.

Towing a trailer or using a car-top carrier	
As required	Change engine oil and filter as indicated by the information display and perform services listed in the Normal Scheduled Maintenance chart.
Every 30000 miles (48000 km)	Change automatic transmission fluid.
Every 60000 miles (96000 km)	Change manual transmission fluid.
	Replace spark plugs.

Extensive idling or low-speed driving for long distances, as in heavy commercial use (such as delivery, taxi, patrol car or livery)	
As required	Change engine oil and filter as indicated by the information display and perform services listed in the Normal Scheduled Maintenance chart.
Inspect frequently, service as required	Replace cabin air filter.
	Replace engine air filter.
Every 30000 miles (48000 km)	Change automatic transmission fluid.
Every 60000 miles (96000 km)	Replace spark plugs.

Operating in dusty or sandy conditions (such as unpaved or dusty roads)	
Inspect frequently, service as required	Replace cabin air filter.
	Replace engine air filter.
Every 5000 miles (8000 km)	Inspect the wheels and related components for abnormal noise, wear, looseness or drag.

Information Provided by: DEALER E-PROCESS

Operating in dusty or sandy conditions (such as unpaved or dusty roads)	
	Rotate tires, inspect tires for wear and measure tread depth.
Every 5000 miles (8000 km) or six months	Change engine oil and filter.*
	Perform multi-point inspection.
Every 30000 miles (48000 km)	Change automatic transmission fluid.
Every 50000 miles (80000 km)	Change manual transmission fluid.

*Reset your oil life monitor system after each engine oil and filter change. See **Oil Change Indicator Reset** (page 183).

Exclusive use of E85 (flex fuel vehicles only)	
Every oil change	If ran exclusively on E85, fill the fuel tank full with regular unleaded fuel.

Exceptions

There are several exceptions to the Normal Schedule:

California Fuel Filter Replacement

If you register your vehicle in California, the California Air Resources Board has determined that the failure to perform this maintenance item does not nullify the emission warranty or limit recall liability before the completion of your vehicle's useful life. Ford Motor Company, however, urges you to have all recommended maintenance services performed at the specified intervals and to record all vehicle service.

Hot Climate Oil Change Intervals

Vehicles operating in the Middle East, North Africa, Sub-Saharan Africa or locations with similar climates using an American Petroleum Institute (API) Certified for Gasoline Engines (Certification mark) oil of SM or SN quality, the normal oil change interval is 3000 miles (5000 kilometers).

If the available API SM or SN oils are not available, then the oil change interval is 1800 miles (3000 kilometers).

Engine Air Filter and Cabin Air Filter Replacement

The life of the engine air filter and cabin air filter is dependent on exposure to dusty and dirty conditions. Vehicles operated in these conditions require frequent inspection and replacement of the engine air filter and cabin air filter.

Information Provided by: DEALER E-PROCESS

SCHEDULED MAINTENANCE RECORD

Repair Order #:

Distance:

Engine hours (optional):

Multi-point inspection (recommended): ☐

Dealer stamp

Signature:

Repair Order #:

Distance:

Engine hours (optional):

Multi-point inspection (recommended): ☐

Dealer stamp

Signature:

Information Provided by: DEALER E-PROCESS

Repair Order #:

Distance:

Engine hours (optional):

Multi-point inspection (recommended): ☐

Dealer stamp

Signature:

Repair Order #:

Distance:

Engine hours (optional):

Multi-point inspection (recommended): ☐

Dealer stamp

Signature:

Information Provided by:
DEALER E-PROCESS

Repair Order #:

Distance:

Engine hours (optional):

Multi-point inspection (recommended): ☐

Dealer stamp

Signature:

Repair Order #:

Distance:

Engine hours (optional):

Multi-point inspection (recommended): ☐

Dealer stamp

Signature:

Information Provided by:
DEALER E-PROCESS

Repair Order #:

Distance:

Engine hours (optional):

Multi-point inspection (recommended): ☐

Dealer stamp

Signature:

Repair Order #:

Distance:

Engine hours (optional):

Multi-point inspection (recommended): ☐

Dealer stamp

Signature:

Information Provided by:
DEALER E-PROCESS

Repair Order #:

Distance:

Engine hours (optional):

Multi-point inspection (recommended): ☐

Dealer stamp

Signature:

Repair Order #:

Distance:

Engine hours (optional):

Multi-point inspection (recommended): ☐

Dealer stamp

Signature:

Information Provided by:
DEALER E-PROCESS

Repair Order #:

Distance:

Engine hours (optional):

Multi-point inspection (recommended): ☐

Dealer stamp

Signature:

Repair Order #:

Distance:

Engine hours (optional):

Multi-point inspection (recommended): ☐

Dealer stamp

Signature:

Information Provided by:
DEALER E-PROCESS

Repair Order #:

Distance:

Engine hours (optional):

Multi-point inspection (recommended): ☐

Dealer stamp

Signature:

Repair Order #:

Distance:

Engine hours (optional):

Multi-point inspection (recommended): ☐

Dealer stamp

Signature:

Information Provided by:
DEALER E-PROCESS

Repair Order #:

Distance:

Engine hours (optional):

Multi-point inspection (recommended): ☐

Dealer stamp

Signature:

Repair Order #:

Distance:

Engine hours (optional):

Multi-point inspection (recommended): ☐

Dealer stamp

Signature:

Information Provided by:
DEALER E-PROCESS

Repair Order #:

Distance:

Engine hours (optional):

Multi-point inspection (recommended): ☐

Dealer stamp

Signature:

Repair Order #:

Distance:

Engine hours (optional):

Multi-point inspection (recommended): ☐

Dealer stamp

Signature:

Information Provided by:
DEALER E-PROCESS

Repair Order #:

Distance:

Engine hours (optional):

Multi-point inspection (recommended): ☐

Dealer stamp

Signature:

Repair Order #:

Distance:

Engine hours (optional):

Multi-point inspection (recommended): ☐

Dealer stamp

Signature:

Information Provided by:
DEALER E-PROCESS

END USER LICENSE AGREEMENT

VEHICLE SOFTWARE END USER LICENSE AGREEMENT (EULA)

- You (“You” or “Your” as applicable) have acquired a vehicle having several devices, including SYNC ® and various control modules, ("DEVICES") that include software licensed or owned by Ford Motor Company and its affiliates ("FORD MOTOR COMPANY"). Those software products of FORD MOTOR COMPANY origin, as well as associated media, printed materials, and "online" or electronic documentation ("SOFTWARE") are protected by international intellectual property laws and treaties. The SOFTWARE is licensed, not sold. All rights reserved.
- The SOFTWARE may interface with and/or communicate with, or may be later upgraded to interface with and/or communicate with additional software and/or systems provided by FORD MOTOR COMPANY.

IF YOU DO NOT AGREE TO THIS END USER LICENSE AGREEMENT ("EULA") DO NOT USE THE DEVICES OR COPY THE SOFTWARE. ANY USE OF THE SOFTWARE, INCLUDING BUT NOT LIMITED TO USE ON THE DEVICES, WILL CONSTITUTE YOUR AGREEMENT TO THIS EULA (OR RATIFICATION OF ANY PREVIOUS CONSENT).

GRANT OF SOFTWARE LICENSE: This EULA grants you the following license:

- You may use the SOFTWARE as installed on the DEVICES and as otherwise interfacing with systems and/or services provide by or through FORD MOTOR COMPANY or its third party software and service providers.

Description of Other Rights and Limitations

- **Speech Recognition:** If the SOFTWARE includes speech recognition component(s), you should understand that speech recognition is an inherently statistical process and that recognition errors are inherent in the process. Neither FORD MOTOR COMPANY nor its suppliers shall be liable for any damages arising out of errors in the speech recognition process. It is your responsibility to monitor any speech recognition functions included in the system.
- **Limitations on Reverse Engineering, Decompilation and Disassembly:** You may not reverse engineer, decompile, translate, disassemble or attempt to discover any source code or underlying ideas or algorithms of the SOFTWARE nor permit others to reverse engineer, decompile or disassemble the SOFTWARE, except and only to the extent that such activity is expressly permitted by applicable law notwithstanding this limitation or to the extent as may be permitted by the licensing terms governing use of any open source components included with the SOFTWARE.
- **Limitations on Distributing, Copying, Modifying and Creating Derivative Works:** You may not distribute, copy, make modifications to or create derivative works based on the SOFTWARE, except and only to the extent that such activity is expressly permitted by applicable law notwithstanding this limitation or to the extent as may be permitted by the licensing terms governing use of any open source components included with the SOFTWARE.

Information Provided by:
DEALER E-PROCESS

- **Single EULA:** The end user documentation for the DEVICES and related systems and services may contain multiple EULAs, such as multiple translations and/or multiple media versions (e.g., in the user documentation and in the software). Even if you receive multiple EULAs, you are licensed to use only one (1) copy of the SOFTWARE.
- **SOFTWARE Transfer:** You may permanently transfer your rights under this EULA only as part of a sale or transfer of the DEVICES, provided you retain no copies, you transfer all of the SOFTWARE (including all component parts, the media and printed materials, any upgrades, and, if applicable, the Certificate(s) of Authenticity), and the recipient agrees to the terms of this EULA. If the SOFTWARE is an upgrade, any transfer must include all prior versions of the SOFTWARE.
- **Termination:** Without prejudice to any other rights, FORD MOTOR COMPANY may terminate this EULA if you fail to comply with the terms and conditions of this EULA.
- **Internet-Based Services Components:** The SOFTWARE may contain components that enable and facilitate the use of certain Internet-based services. You acknowledge and agree that FORD MOTOR COMPANY, third party software and service suppliers, its affiliates and/or its designated agent may automatically check the version of the SOFTWARE and/or its components that you are utilizing and may provide upgrades or supplements to the SOFTWARE that may be automatically downloaded to your DEVICES.
- **Additional Software/Services:** The SOFTWARE may permit FORD MOTOR COMPANY, third party software and service suppliers, its affiliates and/or its designated agent to provide or make available to you SOFTWARE updates, supplements, add-on components, or Internet-based services components of the SOFTWARE after the date you obtain your initial copy of the SOFTWARE ("Supplemental Components".) SOFTWARE updates may cause you to incur additional charges from your wireless service provider. If FORD MOTOR COMPANY or third party software and services suppliers provide or make available to you Supplemental Components and no other EULA terms are provided along with the Supplemental Components, then the terms of this EULA shall apply. FORD MOTOR COMPANY, its affiliates and/or its designated agent reserve the right to discontinue without liability any Internet-based services provided to you or made available to you through the use of the SOFTWARE.

Information Provided by:
DEALER E-PROCESS

- **Links to Third Party Sites:** The SOFTWARE may provide you with the ability to link to third party sites. The third party sites are not under the control of FORD MOTOR COMPANY, its affiliates and/or its designated agent. Neither FORD MOTOR COMPANY nor its affiliates nor its designated agent are responsible for (i) the contents of any third party sites, any links contained in third party sites, or any changes or updates to third party sites, or (ii) webcasting or any other form of transmission received from any third party sites. If the SOFTWARE provides links to third party sites, those links are provided to you only as a convenience, and the inclusion of any link does not imply an endorsement of the third party site by FORD MOTOR COMPANY, its affiliates and/or its designated agent.
- **Obligation to Drive Responsibly:** You recognize your obligation to drive responsibly and keep attention on the road. You will read and abide with the DEVICES operating instructions particularly as they pertain to safety and you agree to assume any risk associated with the use of the DEVICES.

UPGRADES AND RECOVERY MEDIA: If the SOFTWARE is provided by FORD MOTOR COMPANY separate from the DEVICES on media such as a ROM chip, CD ROM disk(s) or via web download or other means, and is labeled "For Upgrade Purposes Only" or "For Recovery Purposes Only" you may install one (1) copy of such SOFTWARE onto the DEVICES as a replacement copy for the existing SOFTWARE, and use it in accordance with this EULA, including any additional EULA terms accompanying the upgrade SOFTWARE.

INTELLECTUAL PROPERTY RIGHTS: All title and intellectual property rights in and to the SOFTWARE (including but not limited to any images, photographs, animations, video, audio, music, text and "applets" incorporated into the SOFTWARE), the accompanying printed materials, and any copies of the SOFTWARE, are owned by FORD MOTOR COMPANY, or its affiliates or suppliers. The SOFTWARE is licensed, not sold. You may not copy the printed materials accompanying the SOFTWARE. All title and intellectual property rights in and to the content which may be accessed through use of the SOFTWARE is the property of the respective content owner and may be protected by applicable copyright or other intellectual property laws and treaties. This EULA grants you no rights to use such content outside its intended use. All rights not specifically granted under this EULA are reserved by FORD MOTOR COMPANY, its affiliates, and third party software and service providers and suppliers. Use of any on-line services which may be accessed through the SOFTWARE may be governed by the respective terms of use relating to such services. If this SOFTWARE contains documentation that is provided only in electronic form, you may print one copy of such electronic documentation.

EXPORT RESTRICTIONS: You acknowledge that the SOFTWARE is subject to U.S. and European Union export jurisdiction. You agree to comply with all applicable international and national laws that apply to the SOFTWARE, including the U.S. Export Administration Regulations, as well as end-user, end-use and destination restrictions issued by U.S. and other governments.

Information Provided by:
DEALER E-PROCESS

TRADEMARKS: This EULA does not grant you any rights in connection with any trademarks or service marks of FORD MOTOR COMPANY, its affiliates, and third party software and service providers.

PRODUCT SUPPORT: Please refer to FORD MOTOR COMPANY instructions provided in the documentation for the DEVICES product support, such as the vehicle owner guide.

Should you have any questions concerning this EULA, or if you desire to contact FORD MOTOR COMPANY for any other reason, please refer to the address provided in the documentation for the DEVICES.

No Liability for Certain Damages: EXCEPT AS PROHIBITED BY LAW, FORD MOTOR COMPANY, ANY THIRD PARTY SOFTWARE OR SERVICES SUPPLIERS, AND THEIR AFFILIATES SHALL HAVE NO LIABILITY FOR ANY INDIRECT, SPECIAL, CONSEQUENTIAL OR INCIDENTAL DAMAGES ARISING FROM OR IN CONNECTION WITH THE USE OR PERFORMANCE OF THE SOFTWARE. THIS LIMITATION SHALL APPLY EVEN IF ANY REMEDY FAILS OF ITS ESSENTIAL PURPOSE. THERE ARE NO WARRANTIES OTHER THAN THOSE THAT MAY BE EXPRESSLY PROVIDED FOR YOUR NEW VEHICLE.

SYNC® Automotive Important Safety Information Read and follow instructions:

- Before using your SYNC® system, read and follow all instructions and safety information provided in this end user manual ("Owner Guide".) Not following precautions found in the Owner Guide can lead to an accident or other serious injuries.

General Operation

- **Voice Command Control**: Certain functions within the SYNC® system may be accomplished using voice commands. Using voice commands while driving helps you to operate the system without removing your hands from the wheel or eyes from the road.
- **Prolonged Views of Screen:** Do not access any function requiring a prolonged view of the screen while you are driving. Pull over in a safe and legal manner before attempting to access a function of the system requiring prolonged attention.
- **Volume Setting:** Do not raise the volume excessively. Keep the volume at a level where you can still hear outside traffic and emergency signals while driving. Driving while unable to hear these sounds could cause an accident.
- **Navigation Features:** Any navigation features included in the system are intended to provide turn by turn instructions to get you to a desired destination. Please make certain all persons using this system carefully read and follow instructions and safety information fully.
- **Distraction Hazard:** Any navigation features may require manual (non-verbal) setup. Attempting to perform such set-up or insert data while driving can distract your attention and could cause an accident or other serious injury. Stop the vehicle in a safe and legal manner before attempting these operations.
- **Let Your Judgment Prevail:** Any navigation features are provided only as an aid. Make your driving decisions based on your observations of local conditions and existing traffic regulations. Any such feature is not a

Information Provided by: DEALER E-PROCESS

substitute for your personal judgment. Any route suggestions made by this system should never replace any local traffic regulations or your personal judgment or knowledge of safe driving practices.

- **Route Safety:** Do not follow the route suggestions if doing so would result in an unsafe or illegal maneuver, if you would be placed in an unsafe situation, or if you would be directed into an area that you consider unsafe. The driver is ultimately responsible for the safe operation of the vehicle and therefore, must evaluate whether it is safe to follow the suggested directions.
- **Potential Map Inaccuracy:** Maps used by this system may be inaccurate because of changes in roads, traffic controls or driving conditions. Always use good judgment and common sense when following the suggested routes.
- **Emergency Services:** Do not rely on any navigation features included in the system to route you to emergency services. Ask local authorities or an emergency services operator for these locations. Not all emergency services such as police, fire stations, hospitals and clinics are likely to be contained in the map database for such navigation features.

Your Responsibilities and Assumptions of Risk

- You agree to each of the following:(a) Any use of the SOFTWARE while driving an automobile or other vehicle in violation of applicable law or otherwise driving in an unsafe manner presents a significant risk of distracted driving and should not be attempted under any circumstances;(b) Use of the SOFTWARE at excessive volume poses a significant risk of hearing damage and should not be attempted under any circumstances;(c) The SOFTWARE may not be compatible with new or different versions of an operating system, third party software, or third party services, and the SOFTWARE may potentially cause a critical failure of an operating system, third party software, or third party service.(d) Any third party service accessed by or third party software used with the SOFTWARE (i) may charge an additional fee for access, (ii) may not work correctly, on an uninterrupted basis, or error free, (iii) may change streaming formats or discontinue operation, (iv) may contain adult, profane or offensive content; and (v) may contain inaccurate, false or misleading traffic, weather, financial or safety information or other content; and (e) Use of the SOFTWARE may cause you to incur additional charges from your wireless service provider (WSP) and any data or minute calculators that may be included in the software program are for reference only, are not warranted in any way and should not be relied upon in anyway.
- When using the SOFTWARE, you agree to be responsible for and assume the entire risk to the items set forth in Section (a) – (e) above.

Information Provided by:
DEALER E-PROCESS

Disclaimer of Warranty

YOU EXPRESSLY ACKNOWLEDGE AND AGREE THAT USE OF THE DEVICES AND SOFTWARE IS AT YOUR SOLE RISK AND THAT THE ENTIRE RISK AS TO SATISFACTORY QUALITY, PERFORMANCE, COMPATIBILITY, ACCURACY AND EFFORT IS WITH YOU. TO THE MAXIMUM EXTENT PERMITTED BY APPLICABLE LAW, THE SOFTWARE AND ANY THIRD PARTY SOFTWARE OR THIRD-PARTY SERVICES ARE PROVIDED "AS IS" AND “AS AVAILABLE”, WITH ALL FAULTS AND WITHOUT WARRANTY OF ANY KIND, AND FORD MOTOR COMPANY HEREBY DISCLAIMS ALL WARRANTIES AND CONDITIONS WITH RESPECT TO THE SOFTWARE, THIRD PARTY SOFTWARE, AND THIRD-PARTY SERVICES, EITHER EXPRESS, IMPLIED OR STATUTORY, INCLUDING, BUT NOT LIMITED TO, THE IMPLIED WARRANTIES AND/OR CONDITIONS OF MERCHANTABILITY, OF SATISFACTORY QUALITY, OF FITNESS FOR AN ARTICULAR PURPOSE, OF ACCURACY, OF QUIET ENJOYMENT, AND NON-INFRINGEMENT OF THIRD-PARTY RIGHTS. FORD MOTOR COMPANY DOES NOT WARRANT (a) AGAINST INTERFERENCE WITH YOUR ENJOYMENT OF THE SOFTWARE, THIRD PARTY SOFTWARE, OR THIRD-PARTY SERVICES, (b) THAT THE SOFTWARE, THIRD PARTY SOFTWARE, OR THIRD-PARTY SERVICES WILL MEET YOUR REQUIREMENTS, (c) THAT THE OPERATION OF THE SOFTWARE, THIRD PARTY SOFTWARE, OR THIRD-PARTY SERVICES WILL BE UNINTERRUPTED OR ERROR-FREE, (d) OR THAT DEFECTS IN THE SOFTWARE, THIRD PARTY SOFTWARE, OR THIRD-PARTY SERVICES WILL BE CORRECTED. NO ORAL OR WRITTEN INFORMATION OR ADVICE GIVEN BY FORD MOTOR COMPANY OR ITS AUTHORIZED REPRESENTATIVE SHALL CREATE A WARRANTY. SHOULD THE SOFTWARE, THIRD PARTY SOFTWARE, OR THIRD-PARTY SERVICES PROVE DEFECTIVE, YOU ASSUME THE ENTIRE COST OF ALL NECESSARY SERVICING, REPAIR OR CORRECTION. SOME JURISDICTIONS DO NOT ALLOW THE DISCLAIMER OF IMPLIED WARRANTIES OR LIMITATIONS ON APPLICABLE STATUTORY RIGHTS OF A CONSUMER, SO THE ABOVE DISCLAIMER MAY NOT FULLY APPLY TO YOU. THE SOLE WARRANTY PROVIDED BY FORD MOTOR COMPANY SHALL BE FOUND IN THE WARRANTY INFORMATION INCLUDING WITH YOUR OWNER GUIDE. TO THE EXTENT THAT THERE IS ANY CONFLICT BETWEEN THE TERMS OF THIS SECTION AND THE WARRANTY BOOKLET, THE WARRANTY BOOKLET SHALL CONTROL.

Applicable Law, Venue, Jurisdiction

- The laws of the State of Michigan govern this EULA and Your use of the SOFTWARE. Your use of the SOFTWARE may also be subject to other local, state, national, or international laws. Any litigation arising out of or related to this EULA shall be brought and maintained exclusively in a court of the State of Michigan located in Wayne County or in the United States District Court for the Eastern District of Michigan. You hereby consent to submit to the personal jurisdiction of a court in the State of Michigan located in Wayne County and the United States District Court for the Eastern District of Michigan for any dispute arising out of or relating to this EULA.

Information Provided by:
DEALER E-PROCESS

Binding Arbitration and Class Action Waiver

(a) Application. This Section applies to any dispute EXCEPT IT DOES NOT INCLUDE A DISPUTE RELATING TO COPYRIGHT INFRINGEMENT, OR TO THE ENFORCEMENT OR VALIDITY OF YOUR, FORD MOTOR COMPANY, OR ANY OF FORD MOTOR COMPANY'S LICENSORS' INTELLECTUAL PROPERTY RIGHTS. Dispute means any dispute, action, or other controversy between You and FORD MOTOR COMPANY, other than the exceptions listed above, concerning the SOFTWARE (including its price) or this EULA, whether in contract, warranty, tort, statute, regulation, ordinance, or any other legal or equitable basis.

(b) Notice of Dispute. In the event of a Dispute, You or FORD MOTOR COMPANY must give the other a "Notice of Dispute", which is a written statement of the name, address, and contact information of the party giving it, the facts giving rise to the dispute, and the relief requested. You and FORD MOTOR COMPANY will attempt to resolve any dispute through informal negotiation within 60 days from the date the Notice of Dispute is sent. After 60 days, You or FORD MOTOR COMPANY may commence arbitration.

(c) Small claims court. You may also litigate any dispute in small claims court in your county of residence or FORD MOTOR COMPANY'S principal place of business, if the dispute meets all requirements to be heard in the small claims court. You may litigate in small claims court whether or not You negotiated informally first.

(d) Binding arbitration. If You and FORD MOTOR COMPANY, do not resolve any dispute by informal negotiation or in small claims court, any other effort to resolve the dispute will be conducted exclusively by binding arbitration. You are giving up the right to litigate (or participate in as a party or class member) all disputes in court before a judge or jury. Instead, all disputes will be resolved before a neutral arbitrator, whose decision will be final except for a limited right of appeal under the Federal Arbitration Act. Any court with jurisdiction over the parties may enforce the arbitrator's award.

(e) Class action waiver. Any proceedings to resolve or litigate any dispute in any forum will be conducted solely on an individual basis. Neither you nor FORD MOTOR COMPANY, will seek to have any dispute heard as a class action, as a private attorney general action, or in any other proceeding in which any party acts or proposes to act in a representative capacity. No arbitration or proceeding will be combined with another without the prior written consent of all parties to all affected arbitrations or proceedings.

(f) Arbitration procedure. Any arbitration will be conducted by the American Arbitration Association (the "AAA"), under its Commercial Arbitration Rules. If You are an individual and use the SOFTWARE for personal or vehicle use, or if the value of the dispute is $75,000 or less whether or not You are an individual or how You use the SOFTWARE, the AAA Supplementary Procedures for Consumer-Related Disputes will also apply. To commence arbitration, submit a Commercial Arbitration Rules Demand for Arbitration form to the AAA. You may request a telephonic or in-person hearing by following the AAA rules. In a dispute involving $10,000 or less, any hearing will be telephonic unless the arbitrator finds good cause to hold an in-person hearing instead. For more information, see adr.org or call 1-800-778-7879. You agree to commence arbitration only in your county of residence or FORD MOTOR COMPANY'S principal place of business. The arbitrator

Information Provided by: DEALER E-PROCESS

may award the same damages to You individually as a court could. The arbitrator may award declaratory or injunctive relief only to You individually, and only to the extent required to satisfy Your individual claim. **Arbitration fees and incentives.**

- i. Disputes involving $75,000 or less. FORD MOTOR COMPANY will promptly reimburse your filing fees and pay the AAA's and arbitrator's fees and expenses. If you reject FORD MOTOR COMPANY'S last written settlement offer made before the arbitrator was appointed ("last written offer"), your dispute goes all the way to an arbitrator's decision (called an "award"), and the arbitrator awards you more than the last written offer, FORD MOTOR COMPANY will give you three incentives: (1) pay the greater of the award or $1,000; (2) pay twice your reasonable attorney's fees, if any; and (3) reimburse any expenses (including expert witness fees and costs) that your attorney reasonably accrues for investigating, preparing, and pursuing your claim in arbitration. The arbitrator will determine the amounts.
- ii. Disputes involving more than $75,000. The AAA rules will govern payment of filing fees and the AAA's and arbitrator's fees and expenses.
- iii. Disputes involving any amount. In any arbitration you commence, FORD MOTOR COMPANY will seek its AAA or arbitrator's fees and expenses, or Your filing fees it reimbursed, only if the arbitrator finds the arbitration frivolous or brought for an improper purpose. In any arbitration FORD MOTOR COMPANY commences, it will pay all filing, AAA, and arbitrator's fees and expenses. It will not seek its attorney's fees or expenses from you in any arbitration. Fees and expenses are not counted in determining how much a dispute involves.

(h) Claims or disputes must be filed within one year. To the extent permitted by law, any claim or dispute under this EULA to which this Section applies must be filed within one year in small claims court (Section c) or in arbitration (Section d). The one-year period begins when the claim or dispute first could be filed. If such a claim or dispute is not filed within one year, it is permanently barred.

(i) Severability. If the class action waiver (Section e) is found to be illegal or unenforceable as to all or some parts of a dispute, then that portion of Section e will not apply to those parts. Instead, those parts will be severed and proceed in a court of law, with the remaining parts proceeding in arbitration. If any other provision of that portion Section e is found to be illegal or unenforceable, that provision will be severed with the remainder of Section e remaining in full force and effect.

Telenav Software End User License Agreement

Please read these terms and conditions carefully before you use the TeleNav Software. Your use of the TeleNav Software indicates that you accept these terms and conditions. If you do not accept these terms and conditions, do not break the seal of the package, launch, or otherwise use the TeleNav Software. TeleNav may revise this Agreement and the privacy policy at any time, with or http://www.telenav.com from time to time to review the then current version of this Agreement and of the privacy policy.

1. Safe and Lawful Use

You acknowledge that devoting attention to the TeleNav Software may pose a risk of injury or death to you and others in situations that otherwise require your undivided attention, and you therefore agree to comply with the following when using the TeleNav Software:

Information Provided by: DEALER E-PROCESS

(a) observe all traffic laws and otherwise drive safely;

(b) use your own personal judgment while driving. If you feel that a route suggested by the TeleNav Software instructs you to perform an unsafe or illegal maneuver, places you in an unsafe situation, or directs you into an area that you consider to be unsafe, do not follow such instructions;

(c) do not input destinations, or otherwise manipulate the TeleNav Software, unless your vehicle is stationary and parked;

(d) do not use the TeleNav Software for any illegal, unauthorized, unintended, unsafe, hazardous, or unlawful purposes, or in any manner inconsistent with this Agreement;

(e) arrange all GPS and wireless devices and cables necessary for use of the TeleNav Software in a secure manner in your vehicle so that they will not interfere with your driving and will not prevent the operation of any safety device (such as an airbag).

You agree to indemnify and hold TeleNav harmless against all claims resulting from any dangerous or otherwise inappropriate use of the TeleNav Software in any moving vehicle, including as a result of your failure to comply with the directions above.

2. Account Information

You agree: (a) when registering the TeleNav Software, to provide TeleNav with true, accurate, current, and complete information about yourself, and (b) to inform TeleNav promptly of any changes to such information, and to keep it true, accurate, current and complete.

3. Software License

- Subject to your compliance with the terms of this Agreement, TeleNav hereby grants to you a personal, non-exclusive, non-transferable license (except as expressly permitted below in connection with your permanent transfer of the TeleNav Software license), without the right to sublicense, to use the TeleNav Software (in object code form only) in order to access and use the TeleNav Software. This license shall terminate upon any termination or expiration of this Agreement. You agree that you will use the TeleNav Software only for your personal business or leisure purposes, and not to provide commercial navigation services to other parties.

3.1 License Limitations

- **(a)** reverse engineer, decompile, disassemble, translate, modify, alter or otherwise change the TeleNav Software or any part thereof; **(b)** attempt to derive the source code, audio library or structure of the TeleNav Software without the prior express written consent of TeleNav; **(c)** remove from the TeleNav Software, or alter, any of TeleNav's or its suppliers' trademarks, trade names, logos, patent or copyright notices, or other notices or markings; **(d)** distribute, sublicense or otherwise transfer the TeleNav Software to others, except as part of your permanent transfer of the TeleNav Software; or **(e)** use the TeleNav Software in any manner that

i. infringes the intellectual property or proprietary rights, rights of publicity or privacy or other rights of any party,

Information Provided by:
DEALER E-PROCESS

ii. violates any law, statute, ordinance or regulation, including but not limited to laws and regulations related to spamming, privacy, consumer and child protection, obscenity or defamation, or

iii. is harmful, threatening, abusive, harassing, tortuous, defamatory, vulgar, obscene, libelous, or otherwise objectionable; and (f) lease, rent out, or otherwise permit unauthorized access by third parties to the TeleNav Software without advanced written permission of TeleNav.

4. Disclaimers

- To the fullest extent permissible pursuant to applicable law, in no event will TeleNav, its licensors and suppliers, or agents or employees of any of the foregoing, be liable for any decision made or action taken by you or anyone else in reliance on the information provided by the TeleNav Software. TeleNav also does not warrant the accuracy of the map or other data used for the TeleNav Software. Such data may not always reflect reality due to, among other things, road closures, construction, weather, new roads and other changing conditions. You are responsible for the entire risk arising out of your use of the TeleNav Software. For example but without limitation, you agree not to rely on the TeleNav Software for critical navigation in areas where the well-being or survival of you or others is dependent on the accuracy of navigation, as the maps or functionality of the TeleNav Software are not intended to support such high risk applications, especially in more remote geographical areas.
- TELENAV EXPRESSLY DISCLAIMS AND EXCLUDES ALL WARRANTIES IN CONNECTION WITH THE TELENAV SOFTWARE, WHETHER STATUTORY, EXPRESS OR IMPLIED, INCLUDING ALL WARRANTIES WHICH MAY ARISE FROM COURSE OF DEALING, CUSTOM OR TRADE AND INCLUDING, BUT NOT LIMITED TO, THE IMPLIED WARRANTIES OF MERCHANTABILITY, FITNESS FOR A PARTICULAR PURPOSE AND NON-INFRINGEMENT OF THIRD PARTY RIGHTS WITH RESPECT TO THE TELENAV SOFTWARE.
- Certain jurisdictions do not permit the disclaimer of certain warranties, so this limitation may not apply to you.

5. Limitation of Liability

- TO THE EXTENT PERMITTED UNDER APPLICABLE LAW, UNDER NO CIRCUMSTANCES SHALL TELENAV OR ITS LICENSORS AND SUPPLIERS BE LIABLE TO YOU OR TO ANY THIRD PARTY FOR ANY INDIRECT, INCIDENTAL, CONSEQUENTIAL, SPECIAL OR EXEMPLARY DAMAGES (INCLUDING IN EACH CASE, BUT NOT LIMITED TO, DAMAGES FOR THE INABILITY TO USE THE EQUIPMENT OR ACCESS DATA, LOSS OF DATA, LOSS OF BUSINESS, LOSS OF PROFITS, BUSINESS INTERRUPTION OR THE LIKE) ARISING OUT OF THE USE OF OR INABILITY TO USE THE TELENAV SOFTWARE, EVEN IF TELENAV HAS BEEN ADVISED OF THE POSSIBILITY OF SUCH DAMAGES. NOTWITHSTANDING ANY DAMAGES THAT YOU MIGHT INCUR FOR ANY

Information Provided by:
DEALER E-PROCESS

REASON WHATSOEVER (INCLUDING, WITHOUT LIMITATION, ALL DAMAGES REFERENCED HEREIN AND ALL DIRECT OR GENERAL DAMAGES IN CONTRACT, TORT (INCLUDING NEGLIGENCE) OR OTHERWISE), THE ENTIRE LIABILITY OF TELENAV AND OF ALL OF TELENAV'S SUPPLIERS SHALL BE LIMITED TO THE AMOUNT ACTUALLY PAID BY YOU FOR THE TELENAV SOFTWARE. SOME STATES AND/OR JURISDICTIONS DO NOT ALLOW THE EXCLUSION OR LIMITATION OF INCIDENTAL OR CONSEQUENTIAL DAMAGES, SO THE ABOVE LIMITATIONS OR EXCLUSIONS MAY NOT APPLY TO YOU.

6. Arbitration and Governing Law

- You agree that any dispute, claim or controversy arising out of or relating to this Agreement or the TeleNav Software shall be settled by independent arbitration involving a neutral arbitrator and administered by the American Arbitration Association in the County of Santa Clara, California. The arbitrator shall apply the Commercial Arbitration Rules of the American Arbitration Association, and the judgment upon the award rendered by the arbitrator may be entered by any court having jurisdiction. Note that there is no judge or jury in an arbitration proceeding and the decision of the arbitrator shall be binding upon both parties. You expressly agree to waive your right to a jury trial. This Agreement and performance hereunder will be governed by and construed in accordance with the laws of the State of California, without giving effect to its conflict of law provisions. To the extent judicial action is necessary in connection with the binding arbitration, both TeleNav and you agree to submit to the exclusive jurisdiction of the courts of the County of Santa Clara, California. The United Nations Convention on Contracts for the International Sale of Goods shall not apply.

7. Assignment

- You may not resell, assign, or transfer this Agreement or any of your rights or obligations, except in totality, in connection with your permanent transfer of the TeleNav Software, and expressly conditioned upon the new user of the TeleNav Software agreeing to be bound by the terms and conditions of this Agreement. Any such sale, assignment or transfer that is not expressly permitted under this paragraph will result in immediate termination of this Agreement, without liability to TeleNav, in which case you and all other parties shall immediately cease all use of the TeleNav Software. Notwithstanding the foregoing, TeleNav may assign this Agreement to any other party at any time without notice, provided the assignee remains bound by this Agreement.

8. Miscellaneous

8.1

This Agreement constitutes the entire agreement between TeleNav and you with respect to the subject matter hereof.

8.2

Except for the limited licenses expressly granted in this Agreement, TeleNav retains all right, title and interest in and to the TeleNav Software, including without limitation all related intellectual property rights. No licenses or other rights which are not expressly granted in this Agreement are intended to, or shall be, granted or

Information Provided by:
DEALER E-PROCESS

conferred by implication, statute, inducement, estoppel or otherwise, and TeleNav and its suppliers and licensors hereby reserve all of their respective rights other than the licenses explicitly granted in this Agreement.

8.3

By using the TeleNav Software, you consent to receive from TeleNav all communications, including notices, agreements, legally required disclosures or other information in connection with the TeleNav Software (collectively, "Notices") electronically. TeleNav may provide such Notices by posting them on TeleNav's Website or by downloading such Notices to your wireless device. If you desire to withdraw your consent to receive Notices electronically, you must discontinue your use of the TeleNav Software.

8.4

TeleNav's or your failure to require performance of any provision shall not affect that party's right to require performance at any time thereafter, nor shall a waiver of any breach or default of this Agreement constitute a waiver of any subsequent breach or default or a waiver of the provision itself.

8.5

If any provision herein is held unenforceable, then such provision will be modified to reflect the intention of the parties, and the remaining provisions of this Agreement will remain in full force and effect.

8.6

The headings in this Agreement are for convenience of reference only, will not be deemed to be a part of this Agreement, and will not be referred to in connection with the construction or interpretation of this Agreement. As used in this Agreement, the words "include" and "including" and variations thereof, will not be deemed to be terms of limitation, but rather will be deemed to be followed by the words "without limitation".

9. Other Vendors Terms and Conditions

- The Telenav Software utilizes map and other data licensed to Telenav by third party vendors for the benefit of you and other end users. This Agreement includes end-user terms applicable to these companies (included at the end of this Agreement), and thus your use of the Telenav Software is also subject to such terms. You agree to comply with the following additional terms and conditions, which are applicable to Telenav’s third party vendor licensors::

9.1 End User Terms Required by HERE North America, LLC

The data (“Data”) is provided for your personal, internal use only and not for resale. It is protected by copyright, and is subject to the following terms and conditions which are agreed to by you, on the one hand, and Telenav (“Telenav”) and its licensors (including their licensors and suppliers) on the other hand.

© 2013 HERE. All rights reserved.

The Data for areas of Canada includes information taken with permission from Canadian authorities, including: © Her Majesty the Queen in Right of Canada, © Queen's Printer for Ontario, © Canada Post Corporation, GeoBase®, © Department of Natural Resources Canada.

Information Provided by: DEALER E-PROCESS

HERE holds a non-exclusive license from the United States Postal Service® to publish and sell ZIP+4® information.

©United States Postal Service® 2014. Prices are not established, controlled or approved by the United States Postal Service®. The following trademarks and registrations are owned by the USPS: United States Postal Service, USPS, and ZIP+4

The Data for Mexico includes certain data from Instituto Nacional de Estadística y Geografía.

Terms and Conditions

Permitted Use. You agree to use this Data together with the Telenav Software solely for the internal business and personal purposes for which you were licensed, and not for service bureau, time-sharing or other similar purposes. Accordingly, but subject to the restrictions set forth in the following paragraphs, you agree not to otherwise reproduce, copy, modify, decompile, disassemble, create any derivative works of, or reverse engineer any portion of this Data, and may not transfer or distribute it in any form, for any purpose, except to the extent permitted by mandatory laws.

Restrictions. Except where you have been specifically licensed to do so by Telenav, and without limiting the preceding paragraph, you may not use this Data (a) with any products, systems, or applications installed or otherwise connected to or in communication with vehicles, capable of vehicle navigation, positioning, dispatch, real time route guidance, fleet management or similar applications; or (b) with or in communication with any positioning devices or any mobile or wireless-connected electronic or computer devices, including without limitation cellular phones, palmtop and handheld computers, pagers, and personal digital assistants or PDAs.

Warning. The Data may contain inaccurate or incomplete information due to the passage of time, changing circumstances, sources used and the nature of collecting comprehensive geographic data, any of which may lead to incorrect results.

No Warranty. This Data is provided to you "as is," and you agree to use it at your own risk. Telenav and its licensors (and their licensors and suppliers) make no guarantees, representations or warranties of any kind, express or implied, arising by law or otherwise, including but not limited to, content, quality, accuracy, completeness, effectiveness, reliability, fitness for a particular purpose, usefulness, use or results to be obtained from this Data, or that the Data or server will be uninterrupted or error-free.

Disclaimer of Warranty: TELENAV AND ITS LICENSORS (INCLUDING THEIR LICENSORS AND SUPPLIERS) DISCLAIM ANY WARRANTIES, EXPRESS OR IMPLIED, OF QUALITY, PERFORMANCE, MERCHANTABILITY, FITNESS FOR A PARTICULAR PURPOSE OR NON-INFRINGEMENT. Some States, Territories and Countries do not allow certain warranty exclusions, so to that extent the above exclusion may not apply to you.

Disclaimer of Liability: TELENAV AND ITS LICENSORS (INCLUDING THEIR LICENSORS AND SUPPLIERS) SHALL NOT BE LIABLE TO YOU: IN RESPECT OF ANY CLAIM, DEMAND OR ACTION, IRRESPECTIVE OF THE NATURE OF THE CAUSE OF THE CLAIM, DEMAND OR ACTION ALLEGING ANY LOSS, INJURY OR

Information Provided by:
DEALER E-PROCESS

DAMAGES, DIRECT OR INDIRECT, WHICH MAY RESULT FROM THE USE OR POSSESSION OF THE INFORMATION; OR FOR ANY LOSS OF PROFIT, REVENUE, CONTRACTS OR SAVINGS, OR ANY OTHER DIRECT, INDIRECT, INCIDENTAL, SPECIAL OR CONSEQUENTIAL DAMAGES ARISING OUT OF YOUR USE OF OR INABILITY TO USE THIS INFORMATION, ANY DEFECT IN THE INFORMATION, OR THE BREACH OF THESE TERMS OR CONDITIONS, WHETHER IN AN ACTION IN CONTRACT OR TORT OR BASED ON A WARRANTY, EVEN IF TELENAV OR ITS LICENSORS HAVE BEEN ADVISED OF THE POSSIBILITY OF SUCH DAMAGES. Some States, Territories and Countries do not allow certain liability exclusions or damages limitations, so to that extent the above may not apply to you.

Export Control. You shall not export from anywhere any part of the Data or any direct product thereof except in compliance with, and with all licenses and approvals required under, applicable export laws, rules and regulations, including but not limited to the laws, rules and regulations administered by the Office of Foreign Assets Control of the U.S. Department of Commerce and the Bureau of Industry and Security of the U.S. Department of Commerce. To the extent that any such export laws, rules or regulations prohibit HERE from complying with any of its obligations hereunder to deliver or distribute Data, such failure shall be excused and shall not constitute a breach of this Agreement.

Entire Agreement. These terms and conditions constitute the entire agreement between Telenav (and its licensors, including their licensors and suppliers) and you pertaining to the subject matter hereof, and supersedes in their entirety any and all written or oral agreements previously existing between us with respect to such subject matter.

Governing Law. The above terms and conditions shall be governed by the laws of the State of Illinois [insert “Netherlands” where European HERE Data is used], without giving effect to (i) its conflict of laws provisions, or (ii) the United Nations Convention for Contracts for the International Sale of Goods, which is explicitly excluded. You agree to submit to the jurisdiction of the State of Illinois [insert “The Netherlands” where European HERE Data is used] for any and all disputes, claims and actions arising from or in connection with the Data provided to you hereunder.

Government End Users. If the Data is being acquired by or on behalf of the United States government or any other entity seeking or applying rights similar to those customarily claimed by the United States government, this Data is a “commercial item” as that term is defined at 48 C.F.R. (“FAR”) 2.101, is licensed in accordance with these End-User Terms, and each copy of Data delivered or otherwise furnished shall be marked and embedded as appropriate with the following “Notice of Use,” and shall be treated in accordance with such Notice:

NOTICE OF USE
CONTRACTOR (MANUFACTURER/ SUPPLIER) NAME: HERE CONTRACTOR (MANUFACTURER/ SUPPLIER) ADDRESS: c/o Nokia, 425 West Randolph Street, Chicago, Illinois 60606 This Data is a commercial item as defined in FAR 2.101 and is subject to these End-User Terms under which this Data was provided. © 1987 – 2014 HERE – All rights reserved.

Information Provided by: DEALER E-PROCESS

If the Contracting Officer, federal government agency, or any federal official refuses to use the legend provided herein, the Contracting Officer, federal government agency, or any federal official must notify HERE prior to seeking additional or alternative rights in the Data.

Gracenote® Copyright

CD and music-related data from Gracenote, Inc., copyright©

2000-2007 Gracenote. Gracenote Software, copyright © 2000-2007 Gracenote. This product and service may practice one or more of the following U.S. Patents 5,987,525; 6,061,680; 6,154,773; 6,161,132; 6,230,192; 6,230,207; 6.240,459; 6,330,593 and other patents issued or pending. Some services supplied under license from Open Globe, Inc. for U.S. Patent 6,304,523.

Gracenote and CDDB are registered trademarks of Gracenote. The Gracenote logo and logotype, and the "Powered by Gracenote™" logo are trademarks of Gracenote.

Gracenote® End User License Agreement (EULA)

This device contains software from Gracenote, Inc. of 2000 Powell Street Emeryville, California 94608 ("Gracenote").

The software from Gracenote (the "Gracenote Software") enables this device to do disc and music file identification and obtain music-related information, including name, artist, track, and title information ("Gracenote Data") from online servers ("Gracenote Servers"), and to perform other functions. You may use Gracenote Data only by means of the intended End User functions of this device. This device may contain content belonging to Gracenote's providers. If so, all of the restrictions set forth herein with respect to Gracenote Data shall also apply to such content and such content providers shall be entitled to all of the benefits and protections set forth herein that are available to Gracenote. You agree that you will use the content from Gracenote ("Gracenote Content") , Gracenote Data, the Gracenote Software, and Gracenote Servers for your own personal, non-commercial use only. You agree not to assign, copy, transfer or transmit the Gracenote Content, Gracenote Software or any Gracenote Data (except in a Tag associated with a music file) to any third party. YOU AGREE NOT TO USE OR EXPLOIT GRACENOTE CONTENT, GRACENOTE DATA, THE GRACENOTE SOFTWARE, OR GRACENOTE SERVERS, EXCEPT AS EXPRESSLY PERMITTED HEREIN.

You agree that your non-exclusive licenses to use the Gracenote Content, Gracenote Data, the Gracenote Software, and Gracenote Servers will terminate if you violate these restrictions. If your licenses terminate, you agree to cease any and all use of the Gracenote Content, Gracenote Data, the Gracenote Software, and Gracenote Servers.

Gracenote, respectively, reserve all rights in Gracenote Data, the Gracenote Software, and the Gracenote Servers and Gracenote Content, including all ownership rights. Under no circumstances will either Gracenote become liable for any payment to you for any information that you provide, including any copyrighted material or music file information. You agree that Gracenote may enforce its respective rights, collectively or separately, under this agreement against you, directly in each company's own name.

Information Provided by:
DEALER E-PROCESS

Gracenote uses a unique identifier to track queries for statistical purposes. The purpose of a randomly assigned numeric identifier is to allow Gracenote to count queries without knowing anything about who you are. For more information, see the web page at www.gracenote.com for the Gracenote Privacy Policy.

THE GRACENOTE SOFTWARE, EACH ITEM OF GRACENOTE DATA AND THE GRACENOTE CONTENT ARE LICENSED TO YOU "AS IS". NEITHER GRACENOTE MAKES ANY REPRESENTATIONS OR WARRANTIES, EXPRESS OR IMPLIED, REGARDING THE ACCURACY OF ANY GRACENOTE DATA FROM THE GRACENOTE SERVERS OR GRACENOTE CONTENT. GRACENOTE COLLECTIVELY AND SEPARATELY RESERVE THE RIGHT TO DELETE DATA AND/OR CONTENT FROM THE COMPANIES' RESPECTIVE SERVERS OR, IN THE CASE OF GRACENOTE, CHANGE DATA CATEGORIES FOR ANY CAUSE THAT GRACENOTE DEEMS SUFFICIENT. NO WARRANTY IS MADE THAT EITHER GRACENOTE CONTENT OR THE GRACENOTE SOFTWARE OR GRACENOTE SERVERS ARE ERROR-FREE OR THAT THE FUNCTIONING OF THE GRACENOTE SOFTWARE OR GRACENOTE SERVERS WILL BE UNINTERRUPTED. GRACENOTE IS NOT OBLIGATED TO PROVIDE YOU WITH ANY ENHANCED OR ADDITIONAL DATA TYPES THAT GRACENOTE MAY CHOOSE TO PROVIDE IN THE FUTURE AND IS FREE TO DISCONTINUE ITS ONLINE SERVICES AT ANY TIME. GRACENOTE DISCLAIM ALL WARRANTIES EXPRESS OR IMPLIED, INCLUDING, BUT NOT LIMITED TO, IMPLIED WARRANTIES OF MERCHANTABILITY, FITNESS FOR A PARTICULAR PURPOSE, TITLE, AND NON-INFRINGEMENT. NEITHER GRACENOTE WARRANTS THE RESULTS THAT WILL BE OBTAINED BY YOUR USE OF THE GRACENOTE SOFTWARE OR ANY GRACENOTE SERVER. IN NO CASE WILL GRACENOTE BE LIABLE FOR ANY CONSEQUENTIAL OR INCIDENTAL DAMAGES OR FOR ANY LOST PROFITS OR LOST REVENUES FOR ANY REASON WHATSOEVER. © Gracenote 2007.

FCC ID: ACJ-SYNCG3-L

IC: 216B-SYNCG3-L

This device complies with Part 15 of the FCC Rules and with RSS-210 of Industry Canada. Operation is subject to the following two conditions:

(1) This device may not cause harmful interference, and

(2) this device must accept any interference received, including interference that may cause undesired operation.

WARNING

Changes or modifications not expressively approved by the party responsible for compliance could void the user's authority to operate the equipment. The term "IC" before the radio certification number only signifies that Industry Canada technical specifications were met.

The antenna used for this transmitter must not be co-located or operating in conjunction with any other antenna or transmitter.

Information Provided by: DEALER E-PROCESS

Information Provided by:
DEALER E-PROCESS

A

A/C
See: Climate Control....96
About This Manual....7
ABS
See: Brakes....131
ABS driving hints
See: Hints on Driving With Anti-Lock Brakes....131
Accessories....312
Exterior style....312
Interior style....312
Lifestyle....312
Peace of mind....312
Accessories
See: Replacement Parts Recommendation....11
Adjusting the Headlamps....187
Horizontal Aim Adjustment....189
Vertical Aim Adjustment....187
Adjusting the Steering Wheel....66
Airbag Disposal....44
Air Conditioning
See: Climate Control....96
Air Filter
See: Changing the Engine Air Filter....201
Alarm
See: Anti-Theft Alarm....64
Ambient Lighting....74
Anti-Theft Alarm....64
Alarm System....64
Arming the Alarm....64
Disarming the Alarm....64
Triggering the Alarm....64
Appendices....334
Audible Warnings and Indicators....83
Exterior Lamps On....83
Gearshift Lever Not in Park (P)....83
Key in Ignition....83
Key Outside Vehicle - Vehicles With Keyless System....83
Parking Brake On....83
Safety Belt Minder....83
Audio Control....66
Audio Input Jack....265
Audio System....248
General Information....248
Audio Unit - Vehicles With: AM/FM/CD/SYNC....253
Alternative Frequencies....256
Automatic Volume Control....256
Autostore Control....256
Sound Button....255
Station Preset Buttons....255
Station Tuning Control....255
Waveband Button....255
Audio Unit - Vehicles With: AM/FM/CD....249
Alternative Frequencies....252
Automatic Volume Control....252
Autostore Control....252
Sound Button....251
Station Preset Buttons....252
Station Tuning Control....251
Waveband Button....251
Audio Unit - Vehicles With: Sony Audio System/Touchscreen Display....258
Audio Unit - Vehicles With: Touchscreen Display....257
Autolamps....71
Windshield Wiper Activated Headlamps....71
Automatic Climate Control....97
Temperature Control....98
Automatic Transmission....126
Emergency Park Position Release Lever....129
Hints on Driving with an Automatic Transmission....128
Selector Lever Positions....126
Sport Mode and Manual Shifting....127
Automatic Transmission Fluid Check....186
Auxiliary Power Points....109
12 Volt DC Power Point....109
Location....109

B

Battery
See: Changing the 12V Battery....186
Bonnet Lock
See: Opening and Closing the Hood....177
Booster Seats....22
Types of Booster Seats....23

Information Provided by: DEALER E-PRACTICE

Brake Fluid Check.....186
Brakes.....131
General Information.....131
Breaking-In.....154
Bulb Specification Chart.....200

C

Cabin Air Filter.....101
California Proposition 65.....11
Capacities and Specifications - 1.0L EcoBoost™.....238
Specifications.....238
Capacities and Specifications - 1.6L Duratec-16V Ti-VCT (Sigma).....244
Specifications.....245
Capacities and Specifications - 1.6L EcoBoost™.....241
Specifications.....242
Capacities and Specifications.....234
Cargo Nets.....143
Installing and Removing the Cargo Net.....143
Car Wash
See: Cleaning the Exterior.....203
Center Console.....110
Changing a Bulb - 4-Door.....189
Center High Mounted Stop Lamp.....193
Front Fog Lamps.....192
Headlamp.....190
Interior Lamp.....194
License Plate Lamp.....194
Luggage Compartment Lamp, Footwell Lamp and Liftgate Lamp.....194
Reading Lamps.....194
Rear Lamps.....192
Side Direction Indicator.....191
Changing a Bulb - 5-Door.....195
Center High Mounted Stop Lamp.....198
Front Fog Lamps.....197
Headlamp.....195
Interior Lamp.....199
License Plate Lamp.....198
Luggage Compartment Lamp, Footwell Lamp and Liftgate Lamp.....199
Reading Lamps.....199
Rear Lamps.....198
Side Direction Indicator.....196
Changing a Fuse.....176
Fuses.....176
Changing a Road Wheel.....229
Dissimilar Spare Wheel and Tire Assembly Information.....229
Stowing the Flat Tire.....232
Tire Change Procedure.....230
Changing the 12V Battery.....186
Changing the Engine Air Filter.....201
Changing the Wiper Blades.....187
Rear Window Wiper Blade.....187
Windshield Wiper Blades.....187
Checking MyKey System Status.....53
MyKey Distance.....53
Number of Admin Keys.....53
Number of MyKeys.....53
Checking the Wiper Blades.....187
Child Restraint and Safety Belt Maintenance.....34
Child Safety.....15
General Information.....15
Child Safety Locks.....26
Left-Hand Side.....27
Right-Hand Side.....27
Child Seat Positioning.....24
Cigar Lighter.....109
Cleaning Leather Seats.....206
Cleaning Products.....203
Cleaning the Alloy Wheels.....207
Cleaning the Engine.....204
Cleaning the Exterior.....203
Exterior Chrome Parts.....203
Exterior Plastic Parts.....204
Stripes or Graphics.....204
Underbody.....204
Cleaning the Instrument Panel and Instrument Cluster Lens.....206
Cleaning the Interior.....205
Cleaning the Windows and Wiper Blades.....205
Clearing All MyKeys.....51
Climate Control.....96
Clock.....87
Type 1.....87
Type 2.....87
Coolant Check
See: Engine Coolant Check.....184
Crash Sensors and Airbag Indicator.....43

Information Provided by:
DEALER E-PROCESS

Creating a MyKey.....51
Programming/Changing Configurable Settings.....51
Cruise Control.....67
Principle of Operation.....140
Cruise control
See: Using Cruise Control.....140
Customer Assistance.....162

D

Data Recording.....9
Event Data Recording.....9
Service Data Recording.....9
Daytime Running Lamps.....72
Digital Radio.....260
HD Radio Reception and Station Troubleshooting.....261
Direction Indicators.....73
Driver and Passenger Airbags.....37
Children and Airbags.....37
Proper Driver and Front Passenger Seating Adjustment.....37
Driver Knee Airbag.....41
Driving Aids.....142
Driving Hints.....154
Driving Through Water.....154
DRL
See: Daytime Running Lamps.....72

E

Economical Driving.....154
Emission Control System.....120
On-Board Diagnostics (OBD-II).....121
Readiness for Inspection/Maintenance (I/M) Testing.....121
End User License Agreement.....334
VEHICLE SOFTWARE END USER LICENSE AGREEMENT (EULA) 334
Engine Block Heater.....114
Using the Engine Block Heater.....115
Engine Coolant Check.....184
Adding Engine Coolant.....184
Checking the Engine Coolant.....184
Recycled Engine Coolant.....185
Severe Climates.....185
Engine Immobilizer
See: Passive Anti-Theft System.....63
Engine Oil Check.....182
Adding Engine Oil.....183
Engine Oil Dipstick - 1.0L EcoBoost™.....182
Engine Oil Dipstick - 1.6L Duratec-16V Ti-VCT (Sigma).....182
Engine Oil Dipstick - 1.6L EcoBoost™.....182
Engine Specifications.....234
Drivebelt Routing.....234
Environment.....14
Event Data Recording
See: Data Recording.....9
Export Unique Options.....13
Extended Service Plan (ESP).....314
SERVICE PLANS (CANADA ONLY).....315
SERVICE PLANS (U.S. Only).....314
Exterior Mirrors.....76
Fold-Away Exterior Mirrors.....77
Integrated Blind Spot Mirrors.....77
Power Exterior Mirrors.....76

F

Fastening the Safety Belts.....29
Safety Belt Extension Assembly.....31
Safety Belt Locking Modes.....30
Using Safety Belts During Pregnancy.....29
Floor Mats.....155
Fog Lamps - Front
See: Front Fog Lamps.....73
Ford Credit.....11
(U.S. Only).....11
Front Fog Lamps.....73
Front Passenger Sensing System.....38
Fuel and Refueling.....116
Fuel Consumption.....119
Calculating Fuel Economy.....120
Filling the Tank.....119
Fuel Filter.....186
Fuel Quality - Gasoline.....117
Choosing the Right Fuel.....117
Fuel Shutoff.....158
Fuses.....168

Information Provided by:
DEALER E-PROCESS

Fuse Specification Chart.....168
Engine Compartment Fuse Box.....168
Passenger Compartment Fuse Box.....172

G

Gauges.....79
Compass (If Equipped).....79
Engine Coolant Temperature Gauge.....80
Fuel Gauge.....80
Low Fuel Reminder.....80
General Information on Radio Frequencies.....45
Intelligent Access.....45
General Maintenance Information.....316
Multi-Point Inspection.....318
Owner Checks and Services.....317
Protecting Your Investment.....316
Why Maintain Your Vehicle?.....316
Why Maintain Your Vehicle at Your Dealership?.....316
Getting Assistance Outside the U.S. and Canada.....165
Getting the Services You Need.....162
Away From Home.....162

H

Handbrake
See: Parking Brake.....132
Hazard Warning Flashers.....158
Headlamp Adjusting
See: Adjusting the Headlamps.....187
Headlamp Exit Delay.....72
Headlamp Removal
See: Removing a Headlamp.....189
Head Restraints.....103
Adjusting the Head Restraint.....104
Heated Seats.....107
Heated Windows and Mirrors.....101
Heated Exterior Mirrors.....101
Heated Windows.....101
Heating
See: Climate Control.....96
Hill Start Assist.....129
Switching the System On and Off.....130
Using Hill Start Assist.....130
Hints on Controlling the Interior Climate.....98
Cooling the Interior Quickly.....100
General Hints.....98
Heating the Interior Quickly.....99
Maximum Cooling Performance in Instrument Panel or Instrument Panel and Footwell Positions.....101
Recommended Settings for Cooling 100
Recommended Settings for Heating.....99
Side Window Defogging in Cold Weather.....101
Vehicle Stationary for Extended Periods During Extreme High Ambient Temperatures.....100
Hints on Driving With Anti-Lock Brakes.....131
Hood Lock
See: Opening and Closing the Hood.....177

I

Ignition Switch.....111
In California (U.S. Only).....163
Information Displays.....84
General Information.....84
Information Messages.....88
Installing Child Seats.....16
Child Seats.....16
Using Lap and Shoulder Belts.....17
Using Lower Anchors and Tethers for Children (LATCH).....19
Using Tether Straps.....21
Instrument Cluster.....79
Instrument Lighting Dimmer.....72
Interior Lamps.....73
Front Interior Lamps.....73
Rear Interior Lamps.....74
Interior Luggage Compartment Release.....61
Interior Mirror.....77
Auto-Dimming Mirror.....78
Introduction.....7

Information Provided by:
DEALER E-PROCESS

J

Jump Starting the Vehicle.....159
Connecting the Jumper Cables.....159
Jump Starting.....160
Preparing Your Vehicle.....159
Removing the Jumper Cables.....160

K

Keyless Entry.....59
Disabled Keys.....60
General Information.....59
Locking and Unlocking the Doors With the Key Blade.....61
Locking Your Vehicle.....59
Passive Key.....59
Unlocking Your Vehicle.....60
Keyless Starting.....111
Failure to Start.....112
Ignition On.....112
Starting with Automatic Transmission.....112
Starting with Manual Transmission.....112
Stopping the Engine When Your Vehicle is Moving.....113
Stopping the Engine with Your Vehicle Stationary.....113
Keys and Remote Controls.....45

L

Lighting Control.....70
Headlamp Flasher.....71
High Beams.....71
Lighting Control Positions.....70
Parking Lamps.....70
Lighting.....70
General Information.....70
Load Carrying.....143
Load Limit.....144
Vehicle Loading - with and without a Trailer.....144
Locking and Unlocking.....55
Auto Lock Feature.....56
Auto Unlock Feature.....57
Emergency Locking With the Key.....57
Locking and Unlocking the Doors From Inside.....55
Locking and Unlocking the Doors With the Key.....55
Remote Control.....55
Smart Unlocks for Integrated Keyhead Transmitter.....56
Smart Unlocks for Intelligent Access Keys.....56
Unlocking the Doors With the Interior Door Handles.....56
Locks.....55
Luggage Covers.....143
Removing the Cover.....144
Lug Nuts
See: Changing a Road Wheel.....229

M

Maintenance.....177
General Information.....177
Manual Climate Control.....96
Manual Liftgate.....58
Opening and Closing the Liftgate.....58
Manual Seats.....105
Adjusting the Height of the Driver Seat.....105
Adjusting the Lumbar Support.....105
Moving the Seat Backward and Forward.....105
Recline Adjustment.....106
Manual Transmission - 1.0L EcoBoost™/ 1.6L Duratec-16V Ti-VCT (Sigma).....123
Parking Your Vehicle.....124
Recommended Shift Speeds.....123
Reverse.....124
Using the Clutch.....123
Manual Transmission - 1.6L EcoBoost™.....124
Parking Your Vehicle.....125
Recommended Shift Speeds.....125
Reverse.....125
Using the Clutch.....124

Information Provided by:
DEALER E-PRACTICE

Media Hub.....266
Message Center
See: Information Displays.....84
Mirrors
See: Heated Windows and Mirrors.....101
See: Windows and Mirrors.....75
Mobile Communications Equipment.....12
Moonroof.....78
Moonroof Sliding Shade.....78
Opening and Closing the Moonroof.....78
Venting the Moonroof.....78
Motorcraft Parts.....235
MyKey Troubleshooting.....53
MyKey™.....50
Principle of Operation.....50

N

Normal Scheduled Maintenance.....319

O

Oil Change Indicator Reset.....183
Resetting the Oil Life Monitoring System.....183
Oil Check
See: Engine Oil Check.....182
Opening and Closing the Hood.....177
Closing the Hood.....178
Opening the Hood.....177
Ordering Additional Owner's Literature.....166
Obtaining a French Owner's Manual.....166
Overhead Console.....110

P

Parking Aid.....136
Rear Sensing System.....137
Parking Aids.....136
Principle of Operation.....136
Parking Brake.....132
All Vehicles.....132
Vehicles With Automatic Transmission.....132
Vehicles With Manual Transmission.....132
Passive Anti-Theft System.....63
SecuriLock®.....63
PATS
See: Passive Anti-Theft System.....63
Perchlorate.....11
Personalized Settings.....88
Measure Units.....88
Switching Chimes Off.....88
Personal Safety System™.....35
How Does the Personal Safety System Work?.....35
Power Door Locks
See: Locking and Unlocking.....55
Power Steering Fluid Check.....186
Power Windows.....75
Accessory Delay.....76
Bounce-Back.....75
One-Touch Down.....75
One-Touch Up.....75
Window Lock.....75
Protecting the Environment.....14

R

Rear Seats.....106
Folding the Seatback.....106
Unfolding the Seatback.....107
Rear Under Floor Storage.....143
Adjustable Load Floor.....143
Rear View Camera.....138
Switching the Rear View Camera Off.....139
Switching the Rear View Camera On.....138
Using the Display.....138
Rear View Camera
See: Rear View Camera.....138
Rear Window Wiper and Washers.....69
Intermittent Wipe.....69
Rear Window Washer.....69
Reverse Gear Wipe.....69
Refueling.....118
Easy Fuel™ Capless Fuel System.....119

Information Provided by:
DEALER E-PROCESS

Remote Control.....45
Car Finder.....49
Integrated Keyhead Transmitter.....45
Intelligent Access Transmitter.....46
Programming a New Integrated Keyhead Transmitter.....46
Replacing the Battery.....47
Reprogramming the Unlocking Function.....46
Sounding a Panic Alarm.....49
Removing a Headlamp.....189
Repairing Minor Paint Damage.....207
Replacement Parts Recommendation.....11
Collision Repairs.....11
Scheduled Maintenance and Mechanical Repairs.....11
Warranty on Replacement Parts.....12
Replacing a Lost Key or Remote Control.....49
Reporting Safety Defects (Canada Only).....167
Reporting Safety Defects (U.S. Only).....166
Roadside Assistance.....157
Vehicles Sold in Canada: Getting Roadside Assistance.....157
Vehicles Sold in Canada: Using Roadside Assistance.....157
Vehicles Sold in the United States: Getting Roadside Assistance.....157
Vehicles Sold in the United States: Using Roadside Assistance.....157
Roadside Emergencies.....157
Running-In
See: Breaking-In.....154
Running Out of Fuel.....117
Refilling With a Portable Fuel Container.....118

S

Safety Belt Height Adjustment.....31
Safety Belt Minder.....32
Belt-Minder™.....32
Safety Belts.....28
Principle of Operation.....28
Safety Belt Warning Lamp and Indicator Chime.....32
Conditions of operation.....32
Safety Precautions.....116
Satellite Radio.....262
Satellite Radio Electronic Serial Number (ESN).....263
Satellite Radio Reception Factors.....263
SIRIUS® Satellite Radio Service.....263
Troubleshooting.....264
Scheduled Maintenance Record.....324
Scheduled Maintenance.....316
Seats.....103
Security.....63
Side Airbags.....40
Side Curtain Airbags.....42
Sitting in the Correct Position.....103
Snow Chains
See: Using Snow Chains.....225
Special Notices.....12
New Vehicle Limited Warranty.....12
On-board Diagnostics (OBD-II).....12
Special Instructions.....12
Special Operating Conditions Scheduled Maintenance.....322
Exceptions.....323
Speed Control
See: Cruise Control.....140
Stability Control.....134
Principle of Operation.....134
Starter Switch
See: Ignition Switch.....111
Starting a Gasoline Engine.....113
Cold or Hot Engine.....113
Engine Idle Speed after Starting.....114
Failure to Start.....114
Flooded Engine.....114
Starting and Stopping the Engine.....111
General Information.....111
Steering.....142
Electric Power Steering.....142
Steering Wheel.....66
Storage Compartments.....110
Sunroof
See: Moonroof.....78
Supplementary Restraints System.....36
Principle of Operation.....36

Information Provided by: DEALER E-PROCESS

Switching Off the Engine.....114
Vehicles With a Turbocharger.....114
Symbols Glossary.....7
SYNC™ Applications and Services.....284
911 Assist.....284
SYNC Services: Traffic, Directions & Information (TDI) (If Equipped, United States Only).....288
Vehicle Health Report (If Equipped, United States Only).....286
SYNC™ AppLink™.....292
SYNC Mobile Apps.....292
SYNC™.....267
General Information.....267
SYNC™ Troubleshooting.....303

T

Tailgate
See: Manual Liftgate.....58
Technical Specifications
See: Capacities and Specifications.....234
The Better Business Bureau (BBB) Auto Line Program (U.S. Only).....164
Tire Care.....210
Glossary of Tire Terminology.....212
Important information for 205/40R17 low-profile tires and wheels.....210
Information About Uniform Tire Quality Grading.....210
Information Contained on the Tire Sidewall.....213
Temperature A B C.....211
Traction AA A B C.....211
Treadwear.....211
Tire Pressure Monitoring System.....225
Changing Tires With a Tire Pressure Monitoring System.....226
Understanding Your Tire Pressure Monitoring System 227
Tires
See: Wheels and Tires.....210
Towing a Trailer.....151
Towing the Vehicle on Four Wheels.....151
Emergency Towing.....151
Recreational Towing.....152
Towing.....151
Traction Control.....133
Principle of Operation.....133
Transmission Code Designation.....237
Transmission.....123
Transmission
See: Transmission.....123
Transporting the Vehicle.....151
Trip Computer.....87

U

Under Hood Overview - 1.0L EcoBoost™.....179
Under Hood Overview - 1.6L Duratec-16V Ti-VCT (Sigma).....180
Under Hood Overview - 1.6L EcoBoost™.....181
USB Port.....266
Using Cruise Control.....140
Switching Cruise Control Off.....141
Switching Cruise Control On.....140
Using MyKey With Remote Start Systems.....53
Using Snow Chains.....225
Using Stability Control - 1.0L EcoBoost™/1.6L Duratec-16V Ti-VCT (Sigma).....135
Using Stability Control - 1.6L EcoBoost™.....135
Switching Sport Mode On.....135
Switching the System Off.....135
Using Summer Tires.....225
Using SYNC™ With Your Media Player.....293
Accessing Your Play Menu.....298
Connecting Your Digital Media Player to the USB Port.....293
Media Menu Features.....296
Media Voice Commands.....295
System Settings.....300
What's Playing?.....295

Information Provided by:
DEALER E-PROCESS

Using SYNC™ With Your Phone.....272
Accessing Features Through the Phone Menu.....276
Accessing Your Phone Settings.....280
Making a Call.....275
Pairing a Cell Phone for the First Time.....272
Pairing Subsequent Cell Phones.....273
Phone Options during an Active Call.....275
Phone Voice Commands.....273
Receiving Calls.....275
System Settings.....281
Text Messaging.....278
Using Traction Control.....133
Switching the System Off.....133
System Indicator Lights and Messages.....133
Using a Switch.....133
Using the Information Display Controls.....133
Using Voice Recognition.....269
Initiating a Voice Session.....269
System Interaction and Feedback.....270
Using Winter Tires.....225
Utilizing the Mediation/Arbitration Program (Canada Only).....164

V

Vehicle Care.....203
Vehicle Certification Label.....237
Vehicle Identification Number.....236
Vehicle Storage.....207
Battery.....208
Body.....208
Brakes.....209
Cooling system.....208
Engine.....208
Fuel system.....208
General.....208
Miscellaneous.....209
Removing Vehicle From Storage.....209
Tires.....209
Ventilation
See: Climate Control.....96
VIN
See: Vehicle Identification Number.....236
Voice Control.....67

W

Warning Lamps and Indicators.....80
Anti-lock Braking System Warning Lamp.....80
Brake System Warning Lamp.....80
Cruise Control Indicator.....81
Direction Indicator.....81
Door Ajar Warning Lamp.....81
Engine Coolant Temperature Warning Lamp.....81
Engine Oil Warning Lamp.....81
Front Airbag Warning Lamp.....81
Front Fog Lamps Indicator.....81
Headlamp Indicator.....81
High Beam Indicator.....82
Ignition Warning Lamp.....82
Information Indicator.....82
Low Fuel Level Warning Lamp.....82
Low Tire Pressure Warning.....82
Safety Belt Minder Warning Lamp.....82
Service Engine Soon.....82
Shift Indicator.....83
Stability Control Indicator.....83
Stability Control System Off Indicator.....83
Washer Fluid Check.....186
Washers
See: Cleaning the Exterior.....203
See: Wipers and Washers.....68
Waxing.....204
Wheel Nuts
See: Changing a Road Wheel.....229
Wheels and Tires.....210
General Information.....210
Technical Specifications.....233
Windows and Mirrors.....75
Windshield Washers.....68
Windshield Wipers.....68
Intermittent Wipe.....68
Speed Dependent Wipers.....68
Winter Tires
See: Using Winter Tires.....225
Wiper Blades
See: Checking the Wiper Blades.....187
Wipers and Washers.....68
Wrecker Towing
See: Transporting the Vehicle.....151

Information Provided by:
DEALER E-PROCESS

Information Provided by:
DEALER E-PROCESS