Antenna Report for TP2 LHTP2-2000

1. **Test Date and Test Person**
   Test date: 17 Oct 2023
   Test person: Pei Chee TAN

2. **Test setup and Equipment**

Equipment	Manufacturer	Model	Last Calibration
ENA Series Network Analyzer	Keysight	E5063A	07 Sep 2023
PCI antenna measurement system	ETS-Lindgren	AMS8500	10 Dec 2021
EMQuest test software	ETS-Lindgren	V1.13	Not applicable

Note: The calibration interval of the above test instruments is 24 months.

Setup Overview of Antenna Measurement System (AMS 8500) for Gain, Total Efficiency, and Radiation Pattern

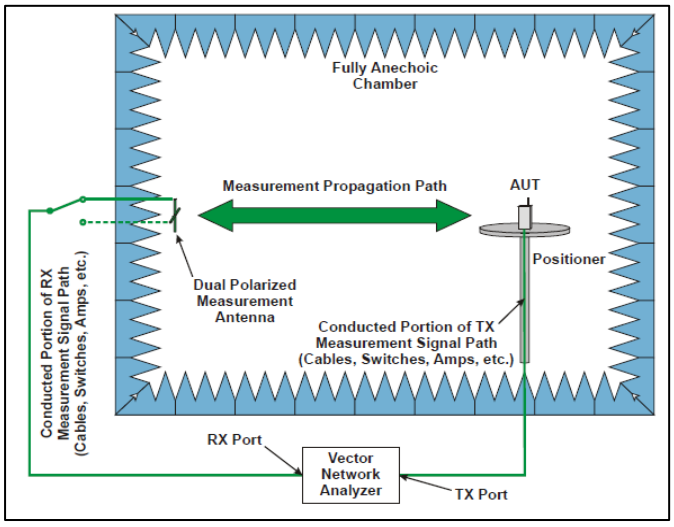

Sample Setup in Anechoic Chamber

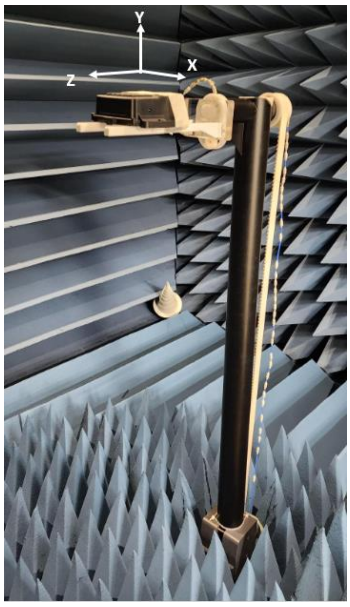

Setup Description:

Step 1: Fix the DUT on the bracket in the center of the anechoic chamber.

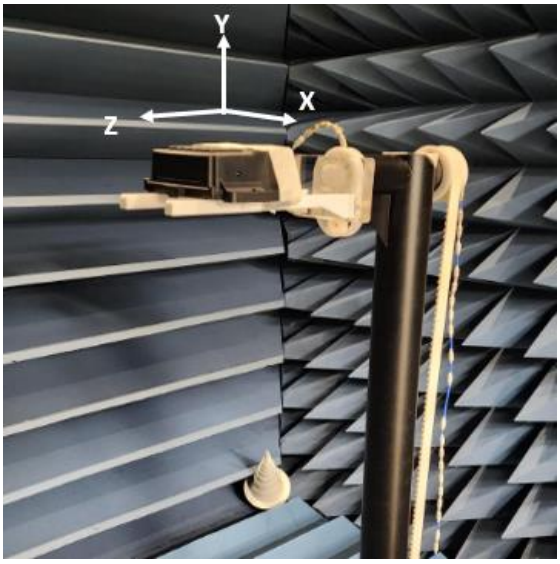

Step 2: The antenna of interest is connected to the coaxial line at the transmitter end of the anechoic chamber.

Step 3: Close the anechoic chamber door to avoid external signal interference.

Step 4: Open EM-Quest test software and power on network analyser, select frequency range to test.

Step 5: Total efficiency, gain and radiation pattern can be seen in EM-Quest test software.

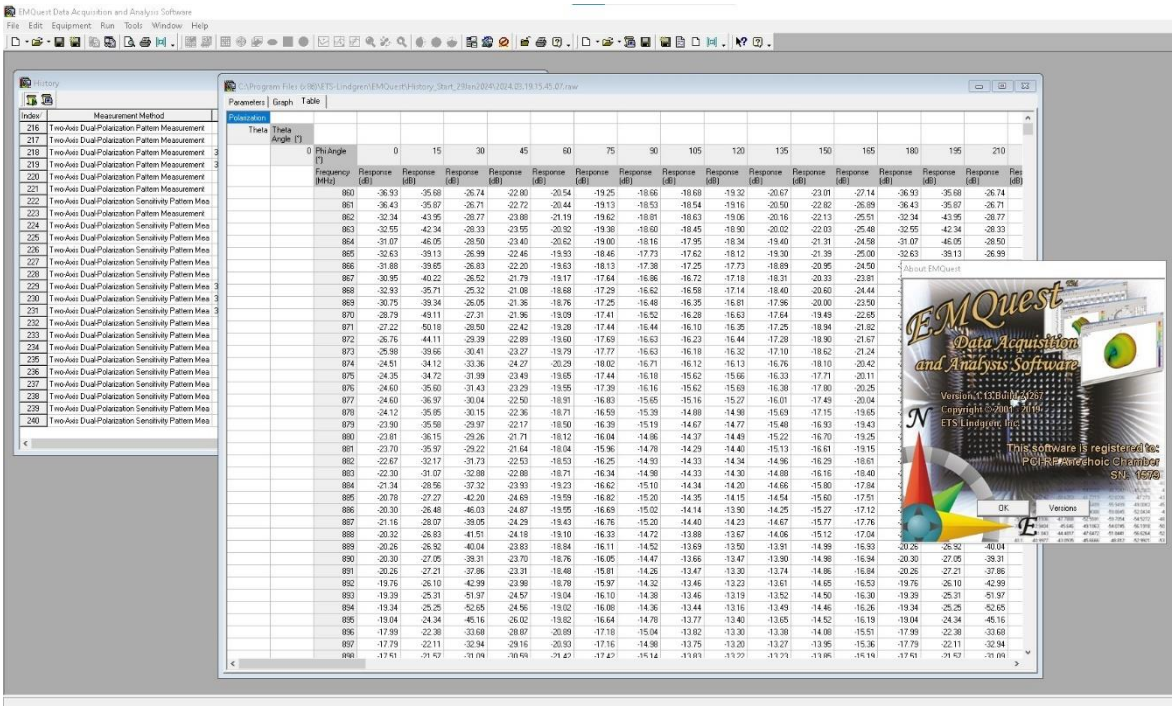

Step 6: Repeat steps 1-6 for all the antenna and record the results obtained.

3. Antenna Specifications

3.1. Bluetooth and Wi-Fi Dual-Band Antenna

Antenna type: FPC antenna (internal)

Antenna manufacturer name & address:

Green Antenna Pte Ltd

29 Mandai Estate #07-09, Singapore 729932

Radiation Pattern:

f=2440MHz

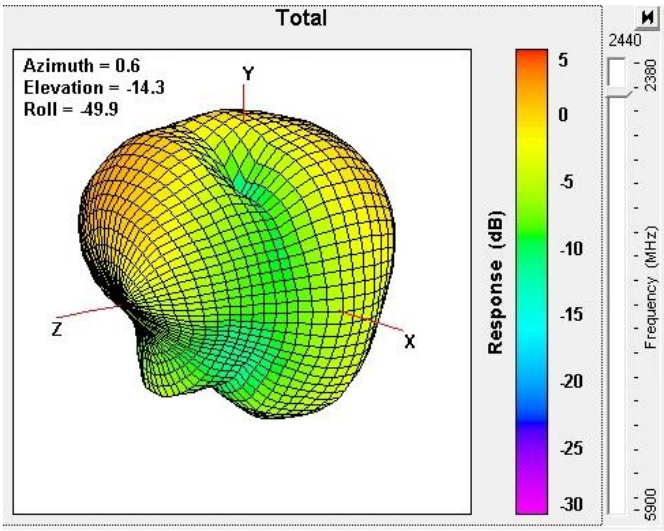

f=5150MHz

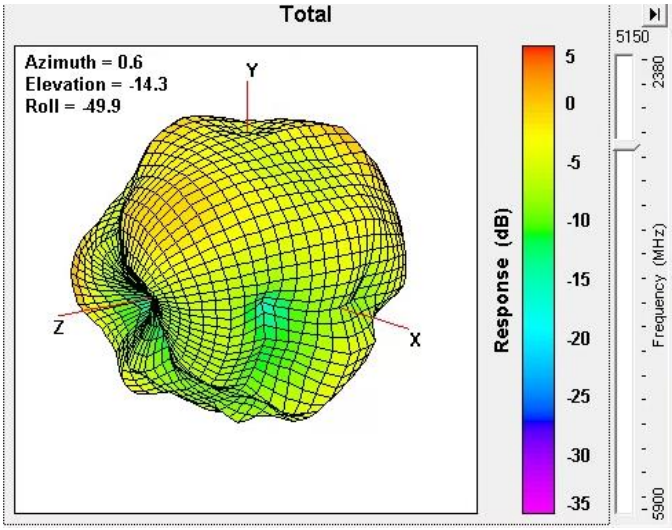

Electrical and Mechanical Specifications:

Electrical	
Frequency	2.4 – 2.485 GHz; 5.15 – 5.85 GHz
S11	< -7dB; <-10dB
Maximum Gain	2.96dBi@2.485GHz; 4.53dBi@5.705GHz
Total Efficiency	~50%@2.4GHz; ~50%@5GHz

Mechanical	
Dimension L1, L2, H, W	28.1mm, 28.1mm, 0.3mm, 6.6mm
Cable length, Diameter	110mm, 1.37mm
Connector	MMCX Right Angle Plug

Antenna Dimension:

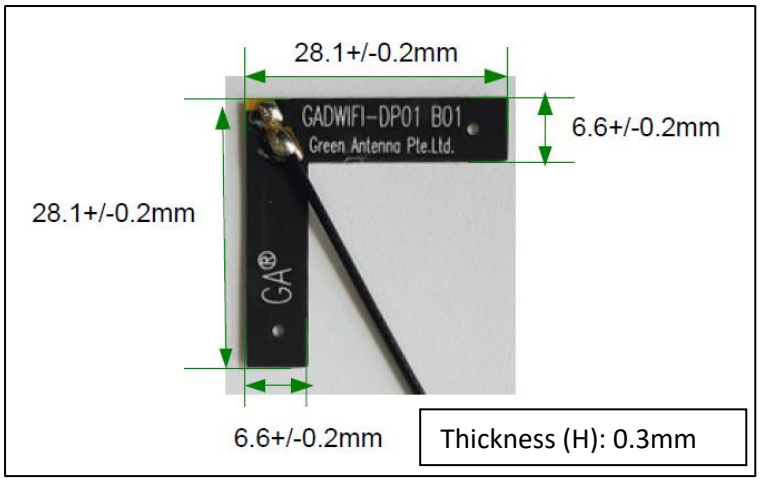

3.2. GPS Antenna

Antenna type: Patch antenna (internal)

Antenna manufacturer name & address:

Green Antenna Pte Ltd

29 Mandai Estate #07-09, Singapore 729932

Radiation pattern:

f=1575MHz

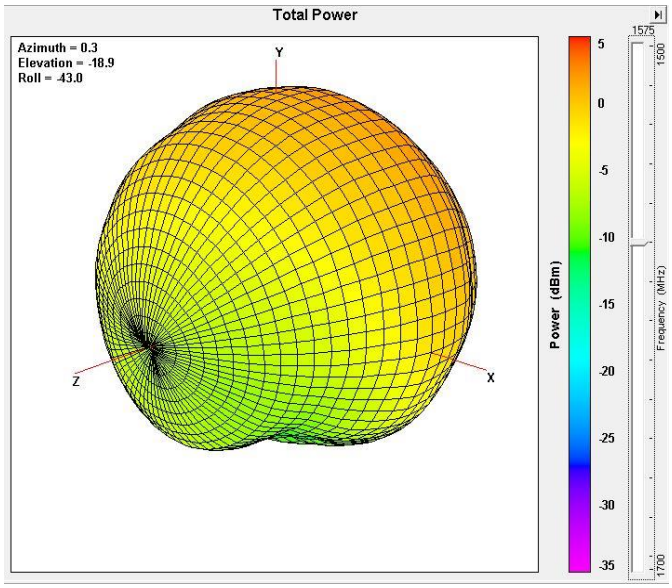

Electrical and mechanical specifications:

Electrical	
Frequency	1.559 GHz, 1.575GHz, 1.606GHz
S11	-3.58dB, -7.31dB, -4.42dB
Maximum Gain	2.69dBi@1.585GHz
Total Efficiency	~41%, ~55.2%, ~35.7%
Mechanical	
Dimension	25mm x 25mm x4.0 mm
Weight	10g

Antenna Dimension:

Dimension: 25mmx25mmx4.0mm

3.3 LTE Antenna

Antenna type: Metal stamp (internal)

Antenna manufacturer name & address:

Green Antenna Pte Ltd

29 Mandai Estate #07-09, Singapore 729932

Peak Gain:

Bands	Transmit Frequency (MHz)	Peak Gain (dBi)
GSM 850	824-849	0.15
GSM 900	880-915	-0.14
GSM 1800	1710-1785	2.78
GSM 1900	1850-1910	2.61
WCDMA B1	1920-1980	2.61
WCDMA B2	1850-1910	2.61
WCDMA B4	1710-1755	2.75
WCDMA B5	824-849	0.15
WCDMA B6	830-840	0.11
WCDMA B8	880-915	-0.14
WCDMA B19	830-845	-0.14
LTE FDD B1	1920-1980	2.61
LTE FDD B2	1850-1910	2.60
LTE FDD B3	1710-1785	2.78
LTE FDD B4	1710-1755	2.78

LTE FDD B5	824-849	0.15
LTE FDD B7	2500-2570	1.96
LTE FDD B8	880-915	-0.14
LTE FDD B12	698-716	-1.54
LTE FDD B13	777-787	0.19
LTE FDD B18	815-830	0.22
LTE FDD B19	830-845	-0.14
LTE FDD B20	832-862	0.04
LTE FDD B26	814-849	0.22
LTE FDD B28	703-748	-0.79
LTE FDD B66	1710-1780	2.78
LTE TDD B38	2570-2620	1.75
LTE TDD B40	2300-2400	4.42
LTE TDD B41	2496-2690	1.96

Radiation Pattern:

f=880MHz

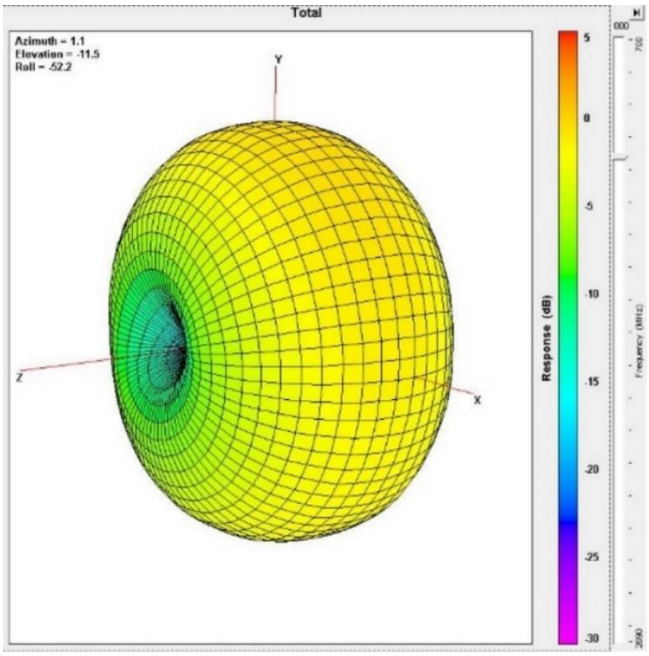

f=1850MHz:

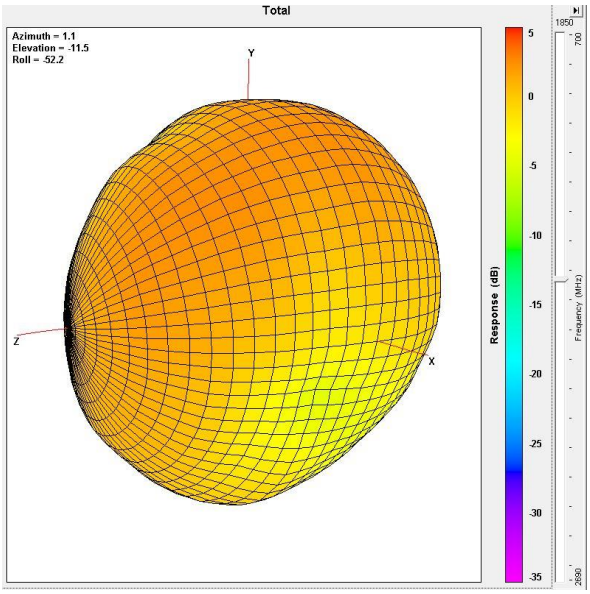

Electrical and Mechanical Specifications:

Electrical	
Frequency	0.699 - 0.96GHz, 1.71 - 2.69GHz
S11	<-2.2dB, <-4dB
Maximum Gain	0.48dBi@0.8GHz; 4.39dBi@2.32GHz
Total Efficiency	~50%, ~67%
Mechanical	
Dimension	Please refer to the pictures below

Antenna Dimensions:

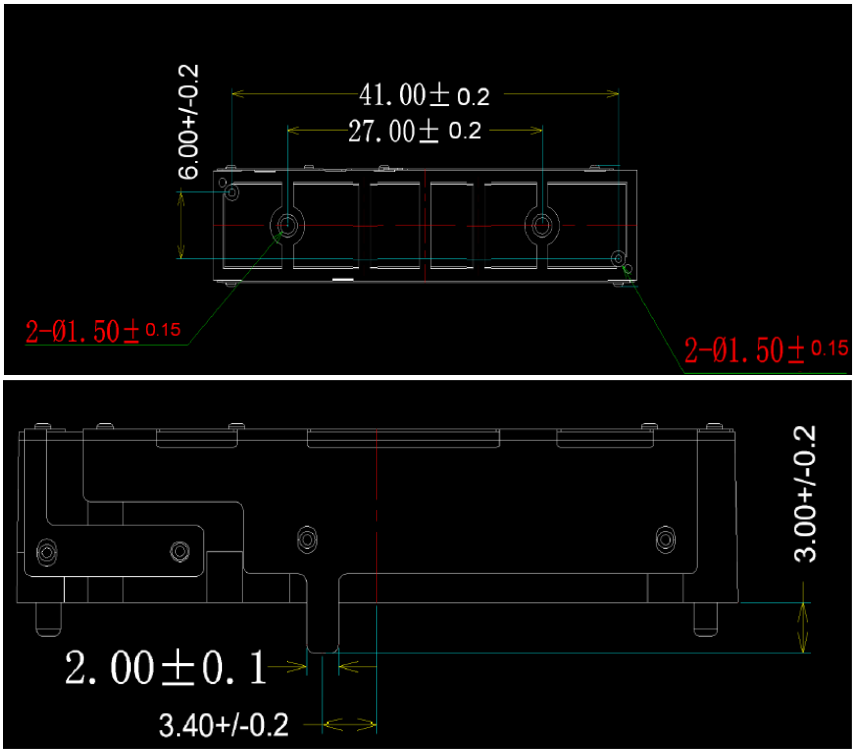
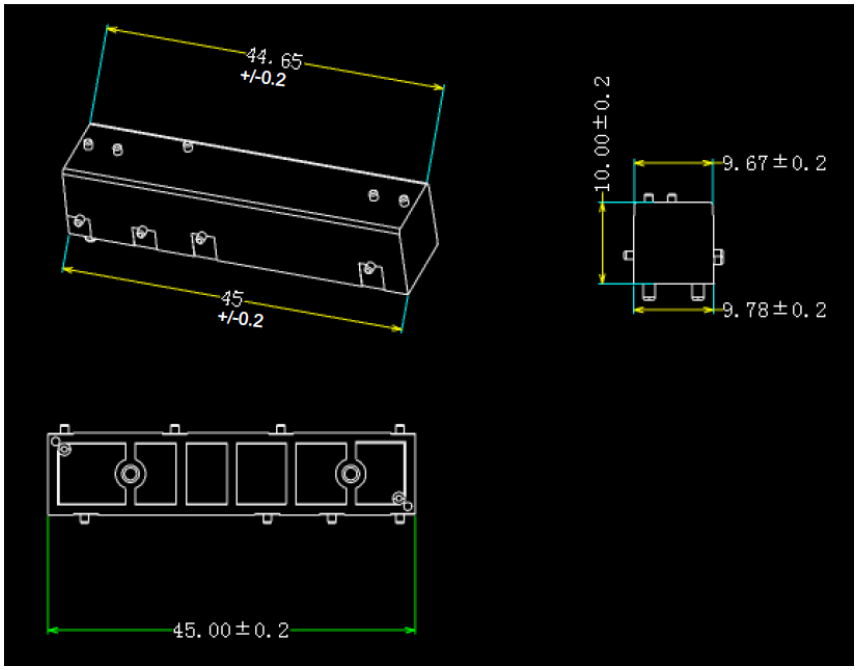
Carrier: