Telematics Platform 2

Installation and User Manual

Model: PCI-TP2

PMN: Telematics Platform 2

PCI Private Limited
35 Pioneer Road North
Singapore 628475

Copyright © 2023 PCI Private Limited. All rights reserved.

PCI Private Limited is a trademark of PCI Private Limited. All other trademarks are the property of their respective owners.

PCI Private Limited endeavors to ensure that the information in this document is correct and fairly stated, but PCI Private Limited is not liable for any errors or omissions. Published information may not be up to date, and it is important to confirm current status with PCI Private Limited.

This technical data may be subject to U.S. and international export, re-export or transfer (export) laws. Diversion contrary to U.S. and international law is strictly prohibited.

October 2023

1. Component Overview
2. FCC, IC and CE Compliance Statements
3. Installation Planning
4. Mounting Options

Component Overview

Telematics Platform 2 (TP2) Characteristics

Requirements	Conditions
Operating Temperature	-30° C to 70° C (connected to vehicle battery) -20° C to 60° C (operating on internal battery)
Operating Voltage	12 or 24 Volts DC
Operating Current	500mA max @ 12V
	250mA max @ 24V
Sleep current	0.6mA max @ 12V
IP Rating	IP 67

Connector Pinouts

12-pin Main Connector DT13-12PA

Pin #	Function	Pin #	Function
1	VBATT	**7**	CAN1_H
2	DIGITAL IN	**8**	CAN1_L
3	CAN2_H	**9**	CHASSIS GROUND
4	CAN2_L	**10**	DIGITAL OUT
5	CHASSIS GROUND	**11**	CHASSIS DETECT
6	IGNITION SENSE	**12**	GROUND

4-pin Ethernet connector 43-01229

Pin #	Function
1	ENET_TX1_P
2	ENET_RX1_P
3	ENET_TX1_N
4	ENET_RX1_N

The TP2 system has no user-serviceable parts. The TP2 contains a permanent lithium coin cell for maintaining the real time clock, and a 1000mAh internal rechargeable lithium-polymer battery as a backup supply to the unit; proper recycling or disposal per local law is required for all components of the TP2.

The internal battery was designed to provide power to the TP2 during theft. The internal battery is in a non-operational mode and does not discharge as long as the external power to the unit is valid. The internal battery keeps the device alive to send relevant information like location through the cellular network during a theft scenario when the external power to the device is cut. Caution must be taken when the battery discharges at 70°C due to the risk of the battery swelling.

Federal Communication Commission Interference Statement

This device complies with Part 15 of the FCC Rules. Operation is subject to the following two conditions: (1) This device may not cause harmful interference, and (2) this device must accept any interference received, including interference that may cause undesired operation.

This equipment has been tested and found to comply with the limits for a Class B digital device, pursuant to Part 15 of the FCC Rules. These limits are designed to provide reasonable protection against harmful interference in a residential installation. This equipment generates, uses and can radiate radio frequency energy and, if not installed and used in accordance with the instructions, may cause harmful interference to radio communications. However, there is no guarantee that interference will not occur in a particular installation. If this equipment does cause harmful interference to radio or television reception, which can be determined by turning the equipment off and on, the user is encouraged to try to correct the interference by one of the following measures:

- Reorient or relocate the receiving antenna.
- Increase the separation between the equipment and receiver.
- Connect the equipment into an outlet on a circuit different from that

to which the receiver is connected.

- Consult the dealer or an experienced radio/TV technician for help.

FCC Caution: Any changes or modifications not expressly approved by the party responsible for compliance could void the user's authority to operate this equipment.

This transmitter must not be co-located or operating in conjunction with any other antenna or transmitter.

This device meets all the other requirements specified in Part 15E, Section 15.407 of the FCC Rules.

FOR MOBILE DEVICE USAGE (>20cm/low power)

Radiation Exposure Statement:

This equipment complies with FCC radiation exposure limits set forth for an uncontrolled environment. This equipment should be installed and operated with minimum distance 20cm between the radiator & your body.

Note: The country code selection is for non-US model only and is not available to all US model. Per FCC regulation, all WiFi product marketed in US must be fixed to US operation channels only.

IC Compliance Statement

This device complies with ISED's licence-exempt RSSs. Operation is subject to the following two conditions: (1) This device may not cause harmful interference, and (2) this device must accept any interference received, including interference that may cause undesired operation.

Le présent appareil est conforme aux CNR d' ISED applicables aux appareils radio exempts de licence. L'exploitation est autorisée aux deux conditions suivantes : (1) le dispositif ne doit pas produire de brouillage préjudiciable, et (2) ce dispositif doit accepter tout brouillage reçu, y compris un brouillage susceptible de provoquer un fonctionnement indésirable.

Caution :

(i) the device for operation in the band 5150-5250 MHz is only for indoor use to reduce the potential for harmful interference to co-channel mobile satellite systems;

(iv) where applicable, antenna type(s), antenna models(s), and worst-case tilt angle(s) necessary to remain compliant with the E.I.R.P. elevation mask requirement set forth in section 6.2.2.3 shall be clearly indicated.

Avertissement:

Le guide d'utilisation des dispositifs pour réseaux locaux doit inclure des instructions précises sur les restrictions susmentionnées, notamment :

(i) les dispositifs fonctionnant dans la bande 5150-5250 MHz sont réservés uniquement pour une utilisation à l'intérieur afin de réduire les risques de brouillage préjudiciable aux systèmes de satellites mobiles utilisant les mêmes canaux;

(iv) lorsqu'il y a lieu, les types d'antennes (s'il y en a plusieurs), les numéros de modèle de l'antenne et les pires angles d'inclinaison nécessaires pour rester conforme à l'exigence de la P.I.R.E. applicable au masque d'élévation, énoncée à la section 6.2.2.3, doivent être clairement indiqués

Radiation Exposure Statement:

This equipment complies with ISED radiation exposure limits set forth for an uncontrolled environment. This equipment must be installed and operated with greater than 20cm between the radiator & your body.

Déclaration d'exposition aux radiations:
Cet équipement est conforme aux limites d'exposition aux rayonnements ISED établies pour un environnement non contrôlé. Cet équipement doit être installé et utilisé à plus de 20 cm entre le radiateur et votre corps.

CE Compliance Statement

This device complies with ***Directive 2014/53/EU*** issued by the Commission of the European Community.

A minimum separation distance of **20 cm** must be maintained between the user's body and the device, including the antenna during body-worn operation to comply with the RF exposure requirements in Europe.

- **Frequency bands and Powers**
  a. Frequency band(s) in which the radio equipment operates:

Cellular:

GSM/GPRS/EDGE	WCDMA	LTE-FDD	LTE-TDD
850MHz	Bd.1 (2100MHz)	Bd.1 (2100MHz)	Bd.38 (2600MHz)
900MHz	Bd.2 (1900MHz)	Bd.2 (1900MHz)	Bd.40 (2300MHz)
1800MHz	Bd.3 (1800MHz)	Bd.3 (1800MHz)	Bd.41 (2500MHz)
1900MHz	Bd.4 (2100MHz)	Bd.4 (2100MHz)	
	Bd.5 (850MHz)	Bd.5 (850MHz)	
	Bd.6 (850MHz)	Bd.7 (2600MHz)	
	Bd.8 (900MHz)	Bd.8 (900MHz)	
	Bd.19 (850MHz)	Bd.12 (700MHz)	
		Bd.13 (700MHz)^{1}	
		Bd.18 (850MHz)	
		Bd.19 (850MHz)	
		Bd.20 (800MHz)	
		Bd.26 (850MHz)	
		Bd.28 (700MHz)	
		Bd.66(2100MHz)	

Wifi:

Features	Description
WLAN Standard	IEEE802.11 a/b/g/n/ac
WLAN VID/PID	N/A
WLAN SVID/SPID	N/A
Frequency Rage	2.4 GHz ISM Bands 2.412-2.472 GHz 5.15-5.25 GHz (FCC UNII-low band) for US/Canada and Europe 5.25-5.35 GHz (FCC UNII-middle band) for US/Canada and Europe 5.47-5.725 GHz for Europe 5.725-5.825 GHz (FCC UNII-high band) for US/Canada
Modulation	802.11a/g/n/ac: OFDM 802.11b: CCK(11, 5.5Mbps), DQPSK(2Mbps), BPSK(1Mbps)
Number of Channels	802.11b: USA, Canada and Taiwan – 1 ~ 11 Most European Countries – 1 ~ 13 802.11g: USA and Canada – 1 ~ 11 Most European Countries – 1 ~ 13 802.11n: USA and Canada – 1 ~ 11 Most European Countries – 1 ~ 13 802.11a: USA – 36, 40, 44, 48, 52, 56, 60, 64, 100, 104, 108, 112, 116, 120, 124, 128, 132, 136, 140, 149, 153, 157, 161, 165

  b. Maximum radio-frequency power transmitted in the frequency band(s) in which the radio equipment operates:

Cellular:

Output power (according to release 99)	Class 4 (+32.5dBm ±1dB) for GSM850 Class 4 (+33dBm ±2dB) for GSM900 Class 1 (+30dBm ±2dB) for GSM1800 Class 1 (+29.35dBm ±1dB) for GSM1900 Class E2 (+27dBm ± 3dB) for GSM 850 8-PSK Class E2 (+27dBm ± 3dB) for GSM 900 8-PSK Class E2 (+26dBm +3 /-4dB) for GSM 1800 8-PSK Class E2 (+26dBm +3 /-4dB) for GSM 1900 8-PSK
Output power (according to Release 99)	Class 3 (+24dBm +1/-3dB) for UMTS 850, WCDMA FDD BdXIX Class 3 (+24dBm +1/-3dB) for UMTS 850, WCDMA FDD BdVI Class 3 (+24dBm +1/-3dB) for UMTS 850, WCDMA FDD BdV Class 3 (+24dBm +1/-3dB) for UMTS 900, WCDMA FDD BdVIII Class 3 (+24dBm +1/-3dB) for UMTS 1700, WCDMA FDD BdIII Class 3 (+24dBm +1/-3dB) for UMTS 1900, WCDMA FDD BdII Class 3 (+24dBm +1/-3dB) for UMTS 2100, WCDMA FDD BdIV Class 3 (+24dBm +1/-3dB) for UMTS 2100, WCDMA FDD BdI
Output power (according to Release 8)	Class 3 (+23dBm ±2dB) for LTE 600, LTE FDD Bd71 Class 3 (+23dBm ±2dB) for LTE 700, LTE FDD Bd12 <MFBI Bd17> Class 3 (+23dBm ±2dB) for LTE 700, LTE FDD Bd13 Class 3 (+23dBm ±2dB) for LTE 700, LTE FDD Bd14 Class 3 (+23dBm+2/-2.5dB) for LTE 700, LTE FDD Bd28 Class 3 (+23dBm ±2dB) for LTE 850, LTE FDD Bd26 Class 3 (+23dBm ±2dB) for LTE 850, LTE FDD Bd18 Class 3 (+23dBm ±2dB) for LTE 850, LTE FDD Bd19 Class 3 (+23dBm ±2dB) for LTE 800, LTE FDD Bd20 Class 3 (+23dBm ±2dB) for LTE 850, LTE FDD Bd5 Class 3 (+23dBm ±2dB) for LTE 900, LTE FDD Bd8 Class 3 (+23dBm ±2dB) for LTE 1800, LTE FDD Bd3 Class 3 (+23dBm ±2dB) for LTE 1900, LTE FDD Bd2 Class 3 (+23dBm ±2dB) for LTE 1900, LTE FDD Bd25 Class 3 (+23dBm ±2dB) for LTE 2100, LTE FDD Bd1 Class 3 (+23dBm ±2dB) for LTE 2100, LTE FDD Bd4 Class 3 (+23dBm ±2dB) for LTE 2100, LTE FDD Bd66 Class 3 (+23dBm ±2dB) for LTE 2600, LTE FDD Bd7 Class 3 (+23dBm ±2dB) for LTE 2300, LTE TDD Bd40 Class 3 (+23dBm ±2dB) for LTE 2500, LTE TDD Bd41 Class 3 (+23dBm ±2dB) for LTE 2600, LTE TDD Bd38

Wifi:

2.4G	Min	Typ	Max	Unit
11b (11Mbps) @EVM<35%	8	10	12.46	dBm
11g (54Mbps) @EVM≦-27 dB	12	14	20.07	dBm
11n (HT20 MCS7) @EVM≦-28 dB	11	13	20.16	dBm
11n (HT40 MCS7) @EVM≦-28 dB	10	12	19.14	dBm
5G	Min	Typ	Max	Unit
11a (54Mbps) @EVM≦-27 dB	11	13	19.66	dBm
11n (HT20 MCS7) @EVM≦-28 dB	8	10	19.71	dBm
11n (HT40 MCS7) @EVM≦-28 dB	8	10	20.44	dBm
11ac (VHT20 MCS8) @EVM≦-30 dB	8	10	19.71	dBm
11ac (VHT40 MCS9) @EVM≦-32 dB	7	9	20.44	dBm
11ac (VHT80 MCS9) @EVM≦-32 dB	6	8	17.00	dBm

- **WLAN 5GHz:**

  Operations in the 5.15-5.35GHz band are restricted to indoor usage for all countries.

- **For single module:**

In all cases assessment of the final product must be mass against the Essential requirements of the ***Directive 2014/53/EU*** Articles 3.1(a) and (b), safety and EMC respectively, as well as any relevant Article 3.2 requirements.

Operation Mode	Frequency Band (MHz)	Antenna Gain (dBi)
Bluetooth	2402-2480	2.96
WLAN 2.4 GHz	2412-2462	2.96
WLAN 5 GHz	5180-5825	4.53
GSM850	824.2-848.8	0.15
GSM1900	1850.2-1909.8	2.61
WCDMA II	1852.4-1907.6	2.61
WCDMA IV	1712.4-1752.6	2.75
WCDMA V	826.4-846.6	0.15
LTE Band 2	1850.7-1909.3	2.6
LTE Band 4	1710.7-1754.3	2.78
LTE Band 5	824.7-848.3	0.15
LTE Band 7	2510-2560	1.96
LTE Band 12	699.7-715.3	-1.54
LTE Band 13	779.5-784.5	0.19
LTE Band 26	814.7-823.3	0.22
LTE Band 38	2572.5-2617.5	1.75
LTE Band 41	2498.5-2687.5	1.96
LTE Band 66	1710.7-1779.3	2.78

Installation Planning

Safety, Reliability, and Accessibility

- Use eye protection when using a drill/performing work that may be hazardous to the eyes.
- Use ear protection in noisy work areas.
- Wear appropriate clothing/uniforms and safety shoes.
- Maintain three points of contact when climbing in and out of cab.
- Make sure you know what is behind the area before you drill.
- Install equipment so it will not cause damage to the vehicle or work loose over time.
- Make sure there are no loose components/cables and no unsecured components.
- Use solid mounting surfaces.
- Route all cables away from hot or abrasive areas.
- Choose installation locations where components can be easily serviced.
- Choose installation locations where components are safe from tampering and damage

IMPORTANT SAFETY INFORMATION

WARNING

Do not locate the product where it obstructs the driver's field of vision, distracts the driver from the driving task, interferes with the driver's operation of controls or displays, or creates a safety hazard. Follow all laws and regulations governing the placement of equipment and mounts.

DO locate the product where:

- it can be safely installed on a secured bracket that is robust enough to minimize any vibration and sustain the weight of the product.
- the mounting surface is strong enough to support the mounting hardware.
- the mounting surface is flat.
- it does not block the view of the road or mirrors.
- the surrounding area is clear of dash controls and gauges.

- it does not limit a passenger's leg room or block access to any other compartments.
- it does not interfere with anyone entering or exiting the vehicle cab.
- it is not likely to impact the driver or passenger in case of an accident or collision.

MAY CONTAIN U.S. AND INTERNATIONAL EXPORT CONTROLLED INFORMATION

DO NOT locate the Product where it:

- obstructs the driver's field of vision.
- distracts the driver from the driving task.
- interferes with the driver's operation of controls or shifting.
- obstructs moving parts of the vehicle, if any.
- blocks the deployment of an airbag.

Additional information for selecting an installation location:

- Installations should not obstruct the driver's field of vision while operating the vehicle, and should comply with all applicable federal and state laws and regulations regarding
- appropriate installation locations (including restrictions against the mounting of objects on a vehicle's windshield) and driver distraction.
- Consider the owner's preference in selecting the installation location and whether there is a team or a single driver.
- Once a suitable location is selected, verify that there is nothing behind the mounting surface that might be damaged by drilling holes.
- The product shall be installed at a location where the radiating antenna can be kept 20 cm from nearby person in normal operation condition to meet regulatory RF exposure requirement.
- This EUT is strictly for installation by vehicle manufacturers / professional installers who will install the device in a location that is compliant with the user manual instructions, such that mobile RF exposure conditions can be maintained under all situations.

Informations complémentaires pour sélectionner un lieu d'installation:

- Les installations ne doivent pas obstruer le champ de vision du conducteur lors de la conduite du véhicule et doivent être conformes à toutes les lois et réglementations fédérales et étatiques applicables en la matière
- les lieux d'installation appropriés (y compris les restrictions contre le montage d'objets sur le pare-brise d'un véhicule) et la distraction du conducteur.
- Considérez la préférence du propriétaire dans la sélection du lieu d'installation et s'il y a une équipe ou un seul chauffeur.
- Une fois qu'un emplacement approprié est sélectionné, vérifiez qu'il n'y a rien derrière la surface de montage qui pourrait être endommagé par des trous de forage.
- Le produit doit être installé à un endroit où l'antenne rayonnante peut être maintenue à 20cm de la personne à proximité en état de fonctionnement normal pour répondre aux exigences réglementaires en matière d'exposition RF.
- Cet EUT est strictement destiné à être installé par les constructeurs automobiles/installateurs professionnels qui installeront l'appareil dans un emplacement conforme aux instructions du manuel d'utilisation, de sorte que les conditions d'exposition RF mobiles puissent être maintenues dans toutes les situations.

WARNING

Excess cable can be a tripping hazard. Ensure cable is not draped where it will interfere with either the driver or passenger as they move within the cab.

Mounting Options:

Mounting Screw Locations.

There are a total of 4 mounting screw holes, one at each corner, as pointed to by the red arrows below. Two of the holes are slightly elongated for tolerance purposes.

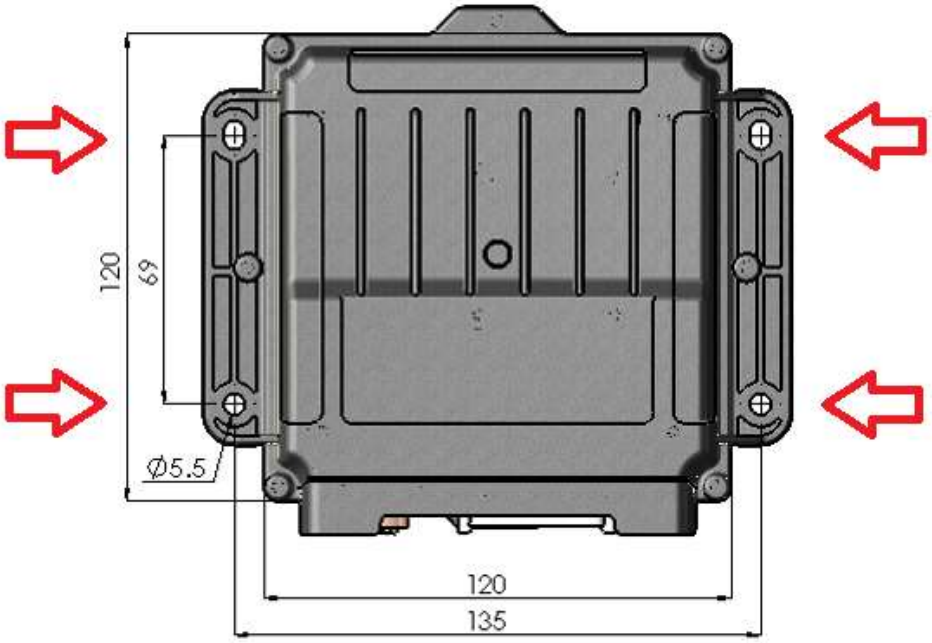

Fastening screws (M5 bolts) and washer are provided.

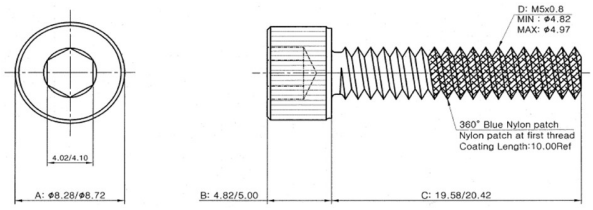
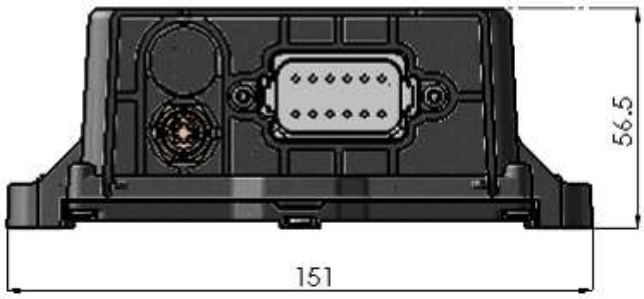
Units are in millimeters.