Attachment A

Type / Model Name	:	SCALANCE W700 / ELN
Product Description	:	Industrial WLAN access point
Applicant	:	Siemens AG, Industrial Automation Division
Address	:	Gleiwitzer Strasse 555
		90475 NUERNBERG, GERMANY
Manufacturer	:	Siemens AG, Sensors & Communication
Address	:	Oestliche Rheinbrueckenstrasse 50
		76187 KARLSRUHE, GERMANY
Licence holder	:	Siemens AG, Industrial Automation Division
Address	:	Gleiwitzer Strasse 555
		90475 NUERNBERG, GERMANY

according **to**

Test Report No. :	**T40580-03-00HS to T40580-03-04HS**	10. May 2016 Date of issue

Deutsche Akkreditierungsstelle
D-PL-12030-01-01
D-PL-12030-01-02

The test report merely corresponds to the test sample. It is not permitted to copy extracts of these test results without the written permission of the test laboratory.

Contents

1 Photo documentation of the EUT 3

1.1 WLAN accesspoint SCALANCE W700 / ELN: 3
1.2 Internal views: 6

1 Photo documentation of the EUT

1.1 WLAN accesspoint SCALANCE W700 / ELN:

External views:

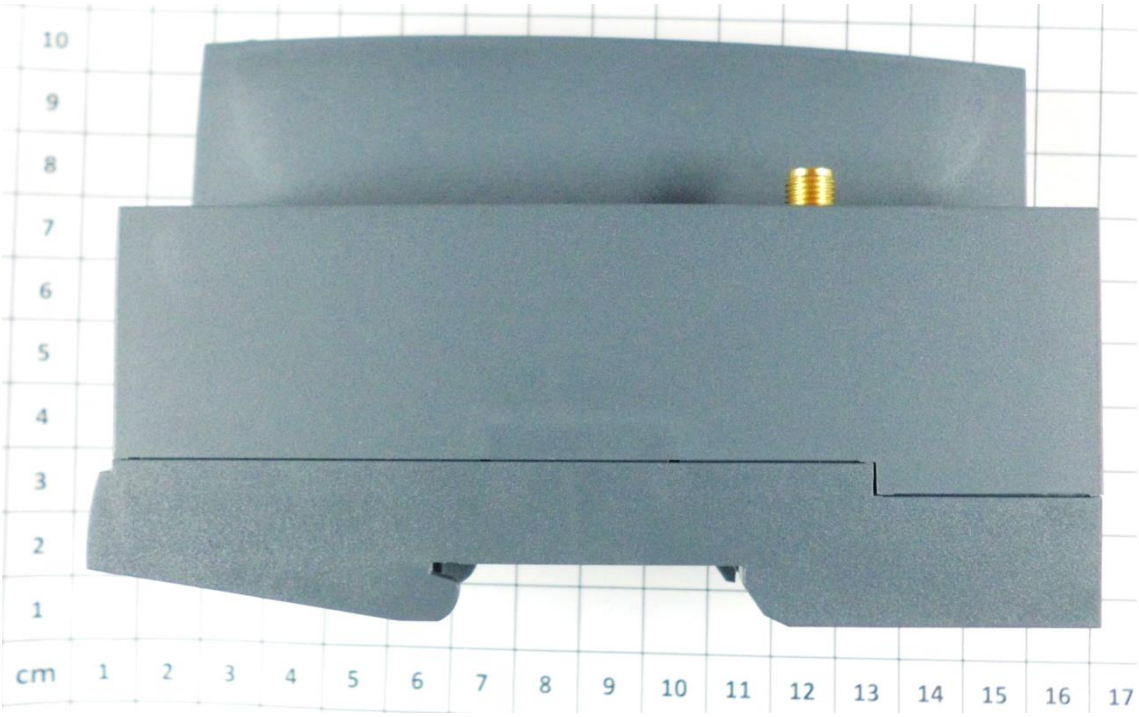

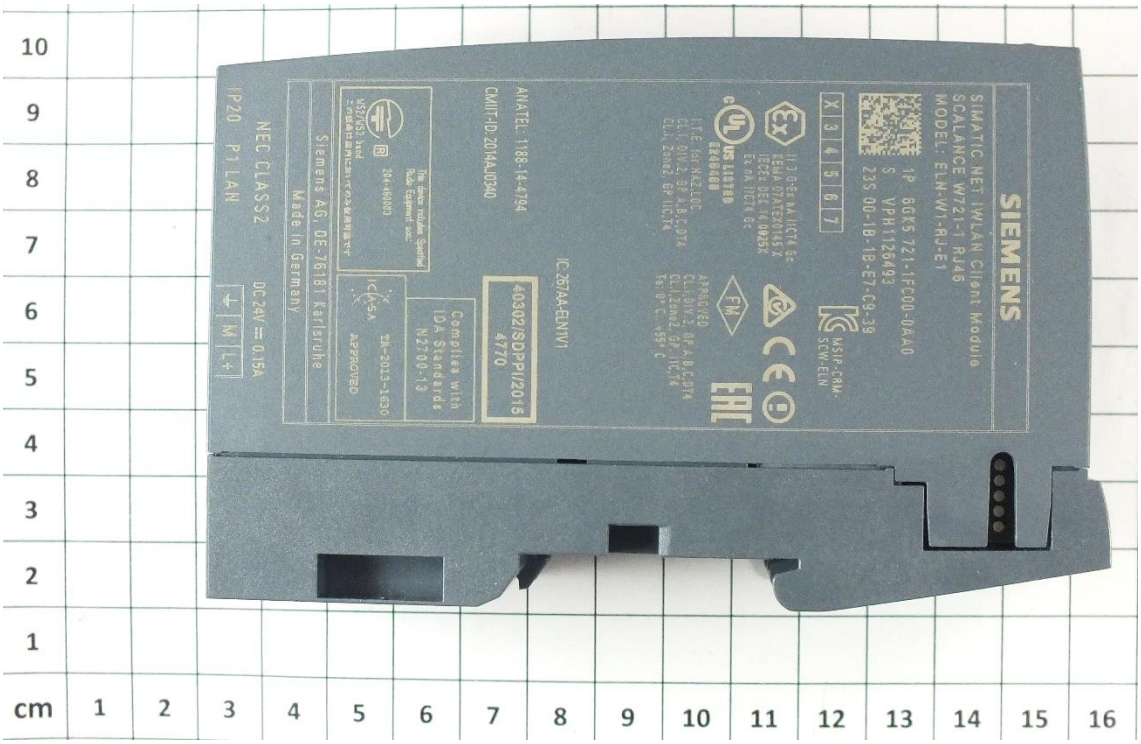

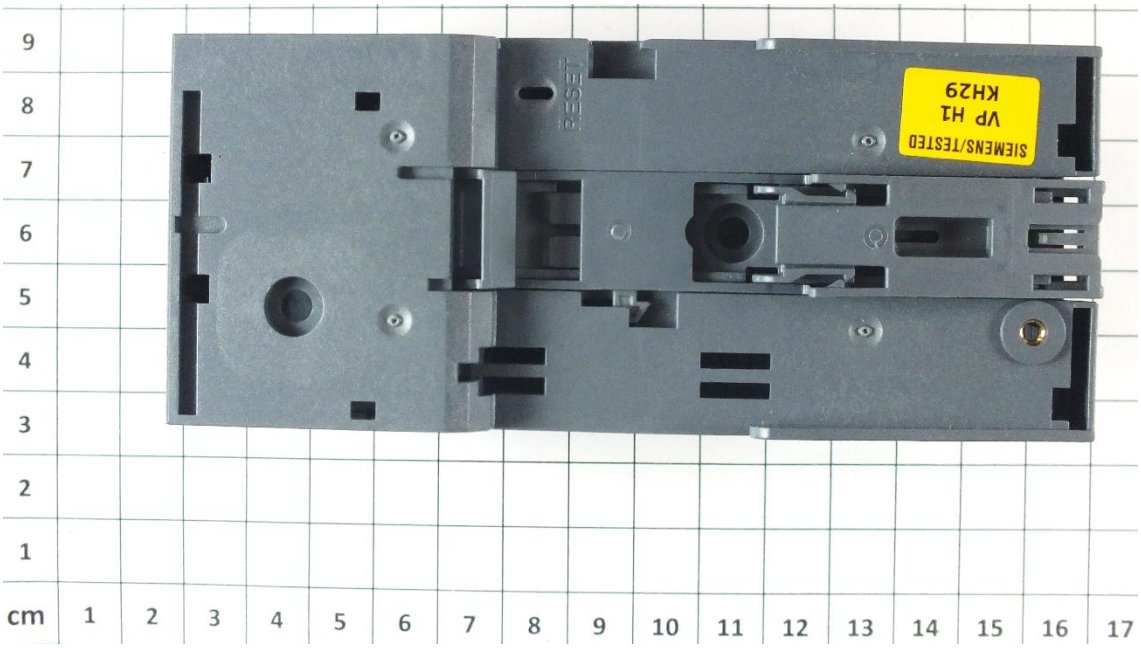
RESET
SIEMENS/TESTED
VP H1
KH29

SIEMENS
SCALANCE
W700
721-1FC00-0AA0

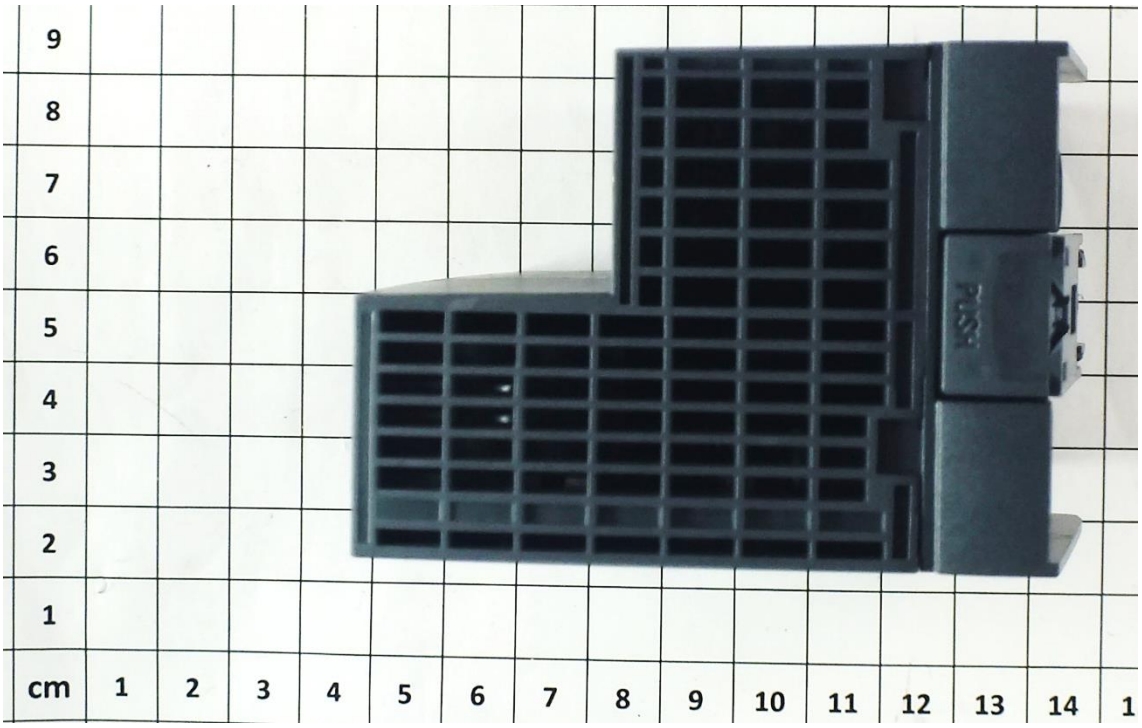
9
8
7
6
5
4
3
2
1
cm 1 2 3 4 5 6 7 8 9 10 11 12 13 14 1

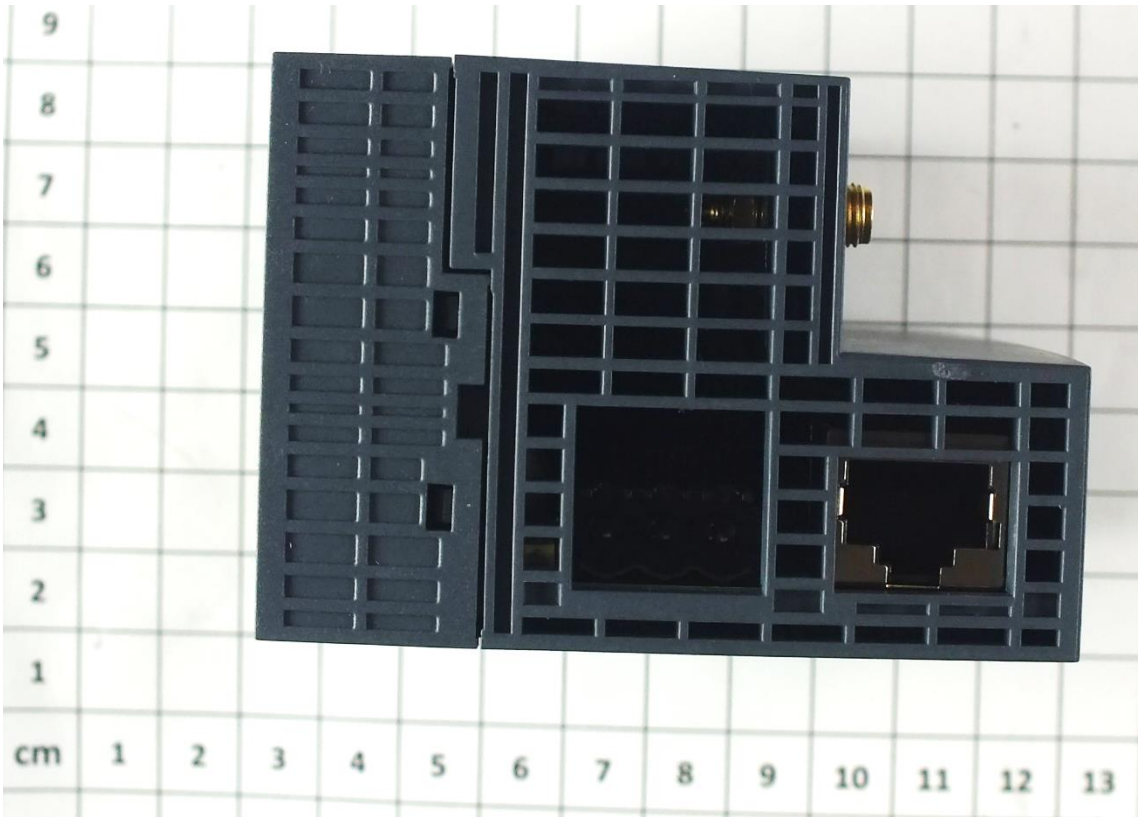
9
8
7
6
5
4
3
2
1
cm 1 2 3 4 5 6 7 8 9 10 11 12 13