Compliance Testing, LLC
Testing since 1963

Test Report

Prepared for: Hitachi/Comark

Model: EC701HP

Description: 600 Watt Digital Transmitter
Serial Number: S00000889
Tested To:
FCC Part 27
Part 27.53(g)
Part 27.54
Part 2.1046(a)
Part 2.1047(d)
Part 2.1049(d)
Part 2.1051
Part 2.1053
Part 2.1055

Date of Issue: December 31, 2018
FCC ID# LYIEC701HP

On the behalf of the applicant:

Hitachi Kokusai Electric/Comark Communications
104 Feeding Hills Road
Southwick, MA 01077, U.S.A.

Attention of:

Thomas Barbeau, VP of Engineering
Ph: (413) 998-1124
E-Mail: tbarbeau@comarktv.com

Prepared By
Compliance Testing, LLC
1724 S. Nevada Way
Mesa, AZ 85204
(480) 926-3100 phone / (480) 926-3598 fax
www.compliancetesting.com

Project ID: p18c0002

Test Engineer

James A. Yard

This report may not be reproduced, except in full, without written permission from Compliance Testing.
All results contained herein relate only to the sample tested.

Test Report Revision History

Revision:	Date:	Revised By:	Reason for Revision:
1.0	12/31/2018	J.A. Yard	Original Document
1.1	5-30-19	MS	Added FCC ID

ILAC / A2LA

Compliance Testing, LLC, has been accredited in accordance with the recognized International Standard ISO/IEC 17025:2005. This accreditation demonstrates technical competence for a defined scope and the operation of a laboratory quality management system (refer to the joint ISO-ILAC-IAF Communiqué dated January 2009).

The tests results contained within this test report all fall within our scope of accreditation, unless noted below.

Please refer to http://www.compliancetesting.com/labscope.html for current scope of accreditation.

Testing Certificate Number: 2152.01

ACCREDITED
TESTING CERT
#2152.01

FCC Site Reg. #349717

IC Reg. #2044A-2

Non-accredited tests contained in this report:

N/A

Conditions during Test

The tests were performed in accordance with the standards listed on the cover page.

The tests were performed in the frequency bands being investigated, with the EUT in the most susceptible, or radiating operating mode consistent with normal applications. The configuration of the test sample has been varied to achieve maximum susceptibility.

If the EUT is a part of a system, or can be connected to auxiliary apparatus, the apparatus shall be tested while connected to the minimum representative configuration of auxiliary apparatus necessary to exercise the ports in a similar manner to that described in the standards listed on the cover page.

If the manufacturer's specifications specifically requires external protection devices or measures which are clearly specified in the user's manual, the test requirements of the standards listed on the cover page, were performed with the external protection in place and documented under accessories.

If the EUT has a large number of terminals, a sufficient number were selected to simulate actual operating conditions and to ensure that all the different types of terminations were covered

The tests are carried out within the ranges of temperature, humidity and pressure specified for the EUT and at the rated supply voltage of 208 VAC, unless otherwise indicated in the basic standard.

Environmental Conditions		
Temperature (°C)	**Humidity (%)**	**Pressure (mbar)**
22.1 – 25.2	38.0 – 49.0	966.9 – 970.3

Test Result Summary

Specification	Test Name	Pass, Fail, N/A	Comments
2.1046(a)	Power Output	Pass	
27.50(c)	Maximum Power	Pass	
2.1047(d)	Modulation Characteristics	Pass	
2.1049(d)	Occupied Bandwidth	Pass	
2.1051 27.53(g)	Harmonics	Pass	
2.1053 27.53(g)	Field Strength of Radiated Emissions	Pass	
27.53(g)	Protection to GPS	Pass	
27.54 2.1055	Frequency Stability	Pass	
2.1053 27.53(g)	Spurious Emissions	Pass	

TABLE OF CONTENTS

2.0 CERTIFICATION OF DATA 8
3.0 TEST EQUIPMENT 8
4.0 EXAMINATION OF EQUIPMENT TO BE TESTED 9
5.0. MEASUREMENTS 10
5.1 RF Power Measurements 10
5.1.1 Digital Average Power Measurement 11
5.2.1 OFDM Modulation Characteristics 12
5.3 Occupied Bandwidth 13
5.3.1 Occupied Bandwidth in ATSC 3.0 (OFDM) Operation 13
5.4 Radiated Emissions 13
5.4.1 Radiated Emissions at Antenna Terminals 14
5.4.2 Harmonic Measurement at Antenna Terminals 16
6.0 FREQUENCY STABILITY 22
7.0 MEASUREMENT UNCERTAINTY 23
8.0 TEST REPORT SUMMARY 24

TABLE OF FIGURES

Figure 4-1 System Signal Flow Diagram 9
Figure 4-2 Photo of EUT 9
Figure 4-3 EUT Block Diagram 10
Figure 5-1 Test Set-Up for Measuring Average Power Output 11
Figure 5-2 Photo of Power Measurement Test Set-up 12
Figure 5-3 Average Power Output Measurement Plot 12
Figure 5-4 Occupied Bandwidth Plot 13
Figure 5-5 Test Set-Up for Measuring Radiated Emissions at Antenna Terminals 14
Figure 5-6 Out of Band Spectral Mask Measurements 15
Figure 5-8 FCC Part 27 E-Block Spectral Mask 16
Figure 5-9 Harmonic Emissions at Antenna Terminals 16
Figure 5-10 Radiation into Radio Navigation Satellite Services (GNSS/GPS) 17
Figure 5-11 Test Set-Up for Radiated Emissions 30 MHz to 1 GHz 18
Figure 5-12 Pre-Scan for Radiated Emissions 30 MHz to 1 GHz 19
Figure 5-13 Test Set-Up for Radiated Emissions Above 1 GHz 20
Figure 5-14 Test Set-Up Photo for Radiated Emissions Above 1 GHz 20
Figure 5-15 Test Plot for Horizontal Radiated Emissions Above 1 Gz 20
Figure 5-16 Test Plot for Vertical Radiated Emissions Above 1 GHz 21

TABLE OF TABLES

Table 3-1 List of Test Equipment Utilized 8
Table 3-2 Required Accessories 9
Table 5-1 Validation of Forward Power Measurement 11
Table 5-2 Radiated Emissions at the Band Edge 15
Table 5-3 Harmonic Levels to 10th Harmonic 17
Table 5-4 Spectrum Analyzer RBW Settings for Radiated Spurious Tests 18
Table 5-5 Radiated Emissions Measurement Data Vertical 30 MHz to 1 GHz 18
Table 5-6 Radiated Emissions Measurement Data Horizontal 30 MHz to 1 GHz 19
Table 5-7 Horizontal Radiated Emissions Measurement Data Above 1 GHz 20
Table 5-8 Vertical Radiated Emissions Measurement Data Above 1 GHz 21
Table 6-1 Frequency Drift over Temperature 22
Table 6-1 Frequency Drift over Voltage 23
Table 7-1 List of Measurement Uncertainty Values 24

1.0 INTRODUCTION

This test report contains the required information for type acceptance of the Hitachi/Comark Model EC701-HP UHF Digital Transmitter. The data presented was taken from Laboratory Tests performed on a production transmitter designed to transmit on the E Block channel of the 700 MHz WCS band (formerly UHF TV Channel 56) at 725 MHz. The Commercial Services channel is 6 MHz wide and includes the frequency span of 722 to 728 MHz in its entirety. The transmitter is designed to transmit at average power levels of up to 600 watts using OFDM modulation and operate under FCC Rule Part 27. The transmitter system design and test data reflect operation and performance pursuant to the rules prescribed in Part 27 of the Commission's Rules.

2.0 CERTIFICATION OF DATA

I certify that the testing procedures and the accumulated testing data contained in this report have been personally supervised by me, and that the testing results are true and correct to the best of my knowledge and belief.

3.0 TEST EQUIPMENT

A complete list of test equipment utilized in the testing process shall be provided in the Test Report when a Testing Laboratory reports testing results according to FCC rules.

List of test equipment utilized:

CTL Asset #	Brand	Model #	Serial Number	Testing / Measuring Equipment /or/ Material Utilized	Freq. Range Used	Next Calibration Date
i00471	Agilent	E4445A	MY46181340	PSA Series Spectrum Analyzer	150 kHz to 7.5GHz	10/16/2019
None	Narda	768-20	N/A	20dB Attenuator	375 MHz	Not Required
I00541	Fluke	910R	922711	GPS Frequency Standard	10 MHz	Not Required
I00287	Tenney	Versa Temp III	25867-04	Environmental Temperature Chamber	N/A	Not Required
I00499	Fluke	79III	AA00040553	RMS Digital Multi-Meter	N/A	Not Required
I00108	SUPERIOR	Unknown	BP124202	AC Variac	N/A	Not Required
I00338	Jefferson Electric	N/A	N/A	Step Up Isolation Transformer	N/A	Not Required
i00379	Agilent	E7405A	US41160409	Spectrum Analyzer	10 kHz to 7.5 GHz	2/13/2019
I00304	Sunol Sciences	SC99V-1	072965-1	System Controller	N/A	Not Required
None	Andrew	FSJ4-50B	N/A	6' x ½" Super-flex	10kHz to 7.25 GHz	Nor Required
I00535.1	COM-Power	LI-3P-132	20200001	3-phase LISN	N/A	4/26/2020
Client Supplied	Bird	8892D300	154400048	2500 Watt, 50 Ohm, Non-Inductive Load	725 MHz	Not Required
Client Supplied	HKL	40215	N/A	Directional Coupler -60dB/-50dB	725 MHz-7.250GHz	Not Required

Table 3-1 List of Test Equipment Utilized

4.0 EXAMINATION OF EQUIPMENT TO BE TESTED

4.1 The Hitachi/Comark EC-701-HP Transmitter System (EUT)

The EUT consists of a 19 inch rack-mounted Digital Broadcast Transmitter System employing integrated stand alone units combined into a system design depicted in the following diagrams (4-1 and 4-2). Most of the individual circuit elements are neatly attached into the front of the19 inch rack using standard EIA mounting into rails which are part of the cabinet assembly. All internal unit to unit cabling is contained within the rack and test outputs are available on the top of the rack to enable in-circuit testing without disturbing the integrity of the enclosed rack (See Exhibit 4-3). The low-pass filter and the spectral mask filter are mounted on top of the cabinet as shown in the photo Figure 4-2.

Figure 4-1 shows the interconnection diagram for the various stages of the transmitter system. Note that the actual EUT tested had the filters mounted on top of the 19 inch fully enclosed rack. See photo Figure 4-2.

Figure 4-5 shows the interconnection diagram for the various equipment stages configured into the transmitter system. Note that there is no scale to the drawing for report simplicity. Note the feedback circuit from the power amplifier test point back to the exciter. This provides an input for the adaptive spectral output control system inherent to the exciter.

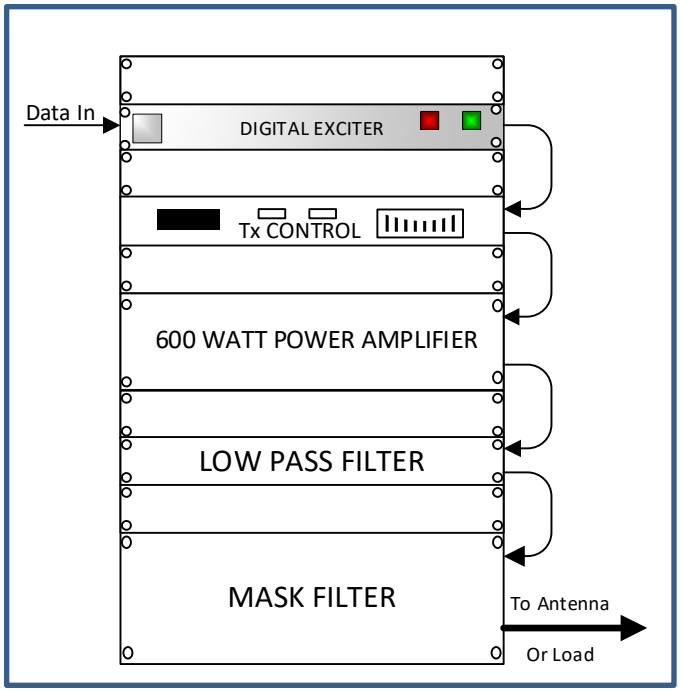

Figure 4-1 System Signal Flow Diagram

Figure 4-2 Photo of EUT 1

Supplied and Required EC-701-HP Accessories:

Low Pass Filter: HKL Model #40055
Mask Filter: Com-Tech Model #TF8D12C, 8 Pole

Table 3-2 Required Accessories

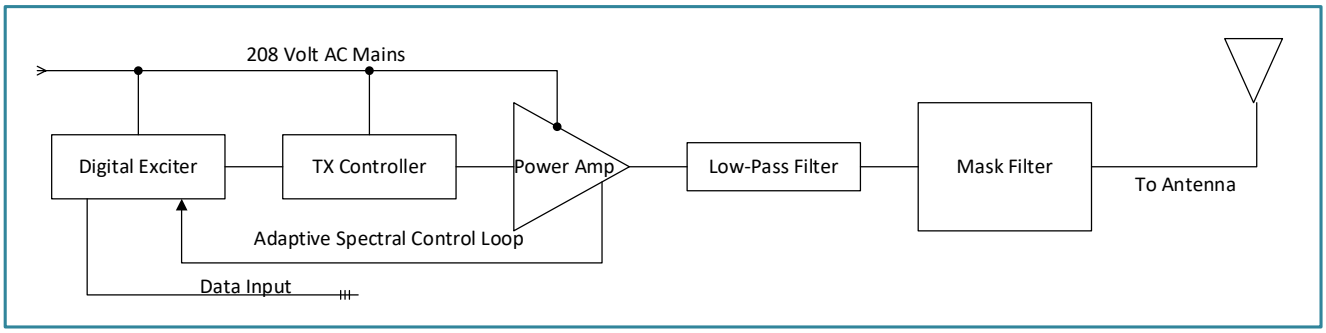

Figure 4-3 EUT Block Diagram

5.0. MEASUREMENTS

5.1 RF Power Measurements

47CFR Part 27 §27.50(c) States as follows: The following power and antenna height requirements apply to stations transmitting in the 600 MHz band and the 698-746 MHz band, and transmitting a signal with an emission bandwidth greater than 1 MHz must not exceed an ERP of 2000 watts/MHz and an antenna height of 305 m HAAT, except that antenna heights greater than 305 m HAAT are permitted if power levels are reduced below 2000 watts/MHz ERP in accordance with Table 4 of this section.

And…

47CFR Part 2 §2.1046(a) - Measurements required: RF power output.

(a) For transmitters other than single sideband, independent sideband and controlled carrier radiotelephone, power output shall be measured at the RF output terminals when the transmitter is adjusted in accordance with the tune-up procedure to give the values of current and voltage on the circuit elements specified in § 2.1033(c)(8). The electrical characteristics of the radio frequency load attached to the output terminals when this test is made shall be stated.

Method of Measurement

The Hitachi/Comark EC701-HP Digital Transmitter was set to transmit at 725 MHz, was modulated with an ATSC 3.0 compliant modulator/exciter, and adjusted to a 600 Watt average channel power output on the spectrum analyzer at the output of the mask filter. The power metering display on the transmitter controller was adjusted to read 600 watts power output into a substantially non-inductive, non-radiating 50 ohm load. With the transmitter properly configured for ATSC 3.0 (OFDM) operation and the average power set to 600 watts, all required tests were performed and the test data recorded in the following sections of the test report. The results of the average digital output tests are shown in Figure 5-3.

The transmitter system (EUT) was connected via a directional coupler to a substantially non-inductive load which presented a 50 ohm load to the transmitter system. The forward -60 port of the directional coupler was connected to the Agilent E4445A Spectrum Analyzer which was set to automatically measure the average power of the transmitter using a measurement bandwidth of 6 MHz. The channel power function allows the automatic direct measurement of the average power presented to the spectrum analyzer. Measured power on the analyzer was -4.63dBm while the calculated output compensated with the conductance losses factored was -4.9dB. The difference was a very slight value of .27dBm. A measurement variance of less than .005%.

5.1.1 Digital Average Power Measurement

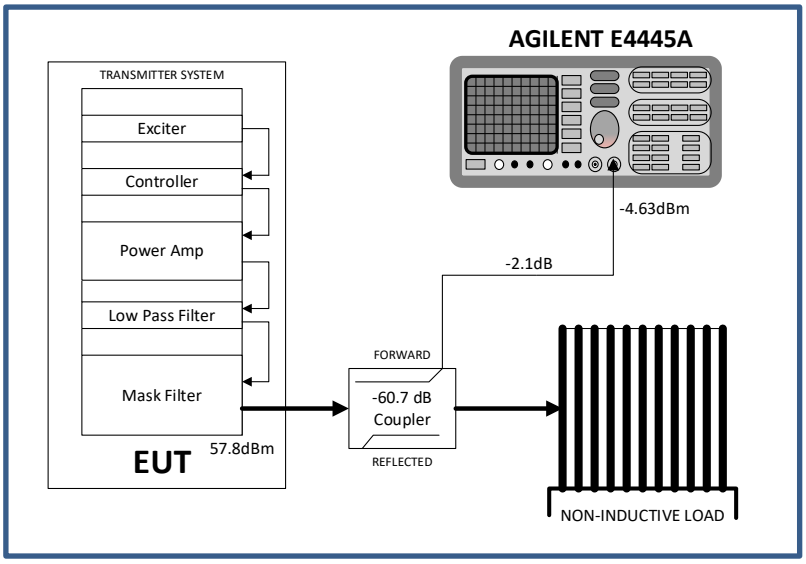

Figure 5-1 Test Set-Up for Measuring Average Power Output

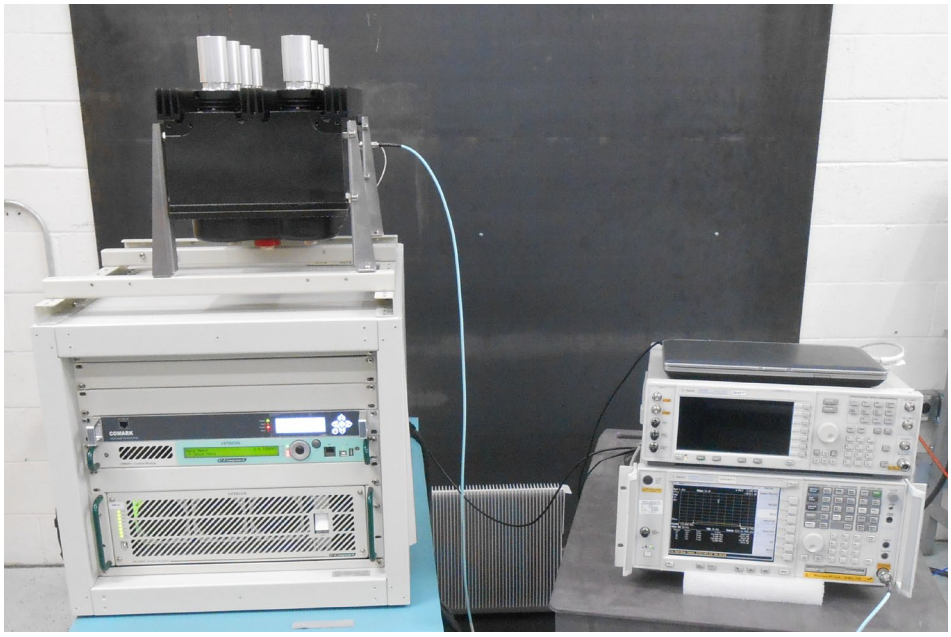

Figure 5-2 Photo of Power Measurement Test Set-Up

EC701-HP Forward Power Validation			
Transmitter Output 600 Watts=		57.9	dBm
Directional Coupler Loss		-60.7	dB
Test Cable Loss		-2.1	dB
Calculated Output	-4.9	dBm	
Measured Output		-4.63	
Variance		**-0.27**	**dB**

Table 5-1 Validation of Forward Power Measurement

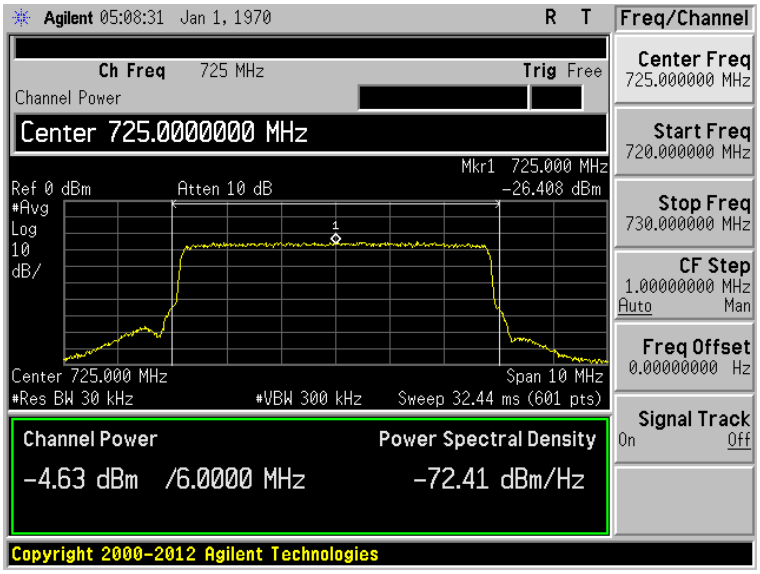

Figure 5-3 Average Power Output Measurement Plot

5.2 Modulation Characteristics

47CFR Part 2 §2.1047(d) - Measurements required: Modulation characteristics.

(d) *Other types of equipment.* A curve or equivalent data which shows that the equipment will meet the modulation requirements of the rules under which the equipment is to be licensed.

5.2.1 OFDM Modulation Characteristics

The EC701-HP transmission system utilizes OFDM modulation provided by the on-board ATSC 3.0 compliant modulator/exciter. In telecommunications, orthogonal frequency-division multiplexing (OFDM) is a method of encoding digital data on multiple sub-carrier frequencies. OFDM has developed into a popular scheme for wideband digital communication, used in applications such as digital television and audio broadcasting, DSL internet access, wireless networks, power line networks, and 4G mobile communications.

ATSC 3.0 is a flexible use OFDM system allowing the operator to use a wide variety of OFDM sub-carrier schemes in order to maximize the flexibility of the transmission. Different combinations of codes, pilot patterns and constellations can be selected to allow data rates ranging from less than 1 Mbps in an extremely robust mode working at less than zero dB SNR (signal-to-noise ratio) to over 57 Mbps when a much higher SNR is available. Most readers know that ATSC 3.0 uses OFDM (orthogonal frequency division multiplexing), which divides data among thousands of carriers (8K, 16K or 32K); versus the legacy ATSC 1.0 standard that uses 8-VSB (eight-level vestigial sideband modulation), which puts all the data on a single carrier. All other DTV standards around the world, including DVBT, DVB-T2, ISDB-T, ISDB-Tb and DTMB use OFDM, although DTMB also supports a single-carrier mode.

ATSC 3.0 also provides an improvement over existing OFDM-based DTV standards through use of the latest LDPC FEC (low-density parity-check forward error correction) codes and optimized constellations ranging from QPSK (quadrature phase shift keying) through 4096QAM (quadrature amplitude modulation).

A key requirement for ATSC 3.0 is the ability to change the transmission format while continuing to support legacy receivers. This is accomplished through a framing structure that includes a “System Discovery and Signalling” signal, referred to as the “bootstrap” signal before each frame. This signal has a fixed physical configuration, but carries data identifying the version of the frame following it. This could be ATSC 3.0, a future ATSC 3.1 or some other variation; even one using a different waveform.

Frames carrying ATSC 3.0 data and those with different formats can be combined in the same RF channel. When it is time to transition to a new standard, the bootstrap will allow older receivers to ignore the new ATSC 3.1 frames, but continue to demodulate the ATSC 3.0 frames.

Figure 4-3 below shows that the OFDM modulation does not exceed the authorized channel bandwidth of 6 MHz.

5.3 Occupied Bandwidth

47CFR Part 2 §2.1049 - Measurements required: Occupied bandwidth.

Method of Measurement

The occupied bandwidth, that is the frequency bandwidth such that, below its lower and above its upper frequency limits, the mean powers radiated are each equal to 0.5 percent of the total mean power radiated by a given emission shall be measured under the following conditions as applicable:

(h) Transmitters employing digital modulation techniques - when modulated by an input signal such that its amplitude and symbol rate represent the maximum rated conditions under which the equipment will be operated. The signal shall be applied through any filter networks, pseudo-random generators or other devices required in normal service. Additionally, the occupied bandwidth shall be shown for operation with any devices used for modifying the spectrum when such devices are optional at the discretion of the user.

5.3.1 Occupied Bandwidth in ATSC 3.0 (OFDM) Operation

Method of Measurement

ATSC 3.0 OFDM modulation supports multiple sub-channels and multiple symbol rates which affects the occupied bandwidth inside the 6 MHz authorized channel. The ATSC 3.0 COFDM signal can occupy up to 5.83 MHz of a 6 MHz channel, more than the 5.38 MHz occupied bandwidth of an ATSC 1.0 signal. As shown in the Occupied Bandwidth test below the current modulation configuration as tested exhibited a net bandwidth of 5.5027 MHz.

The Agilent E4445A Spectrum Analyzer is capable of automated measurement of the channel's occupied bandwidth. The results of the automated test are shown in Figure 5-4.

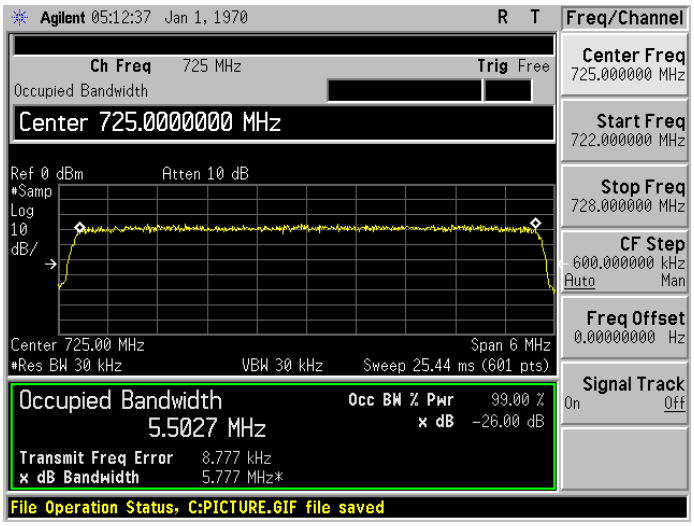

Figure 5-4 Occupied Bandwidth Plot

5.4 Radiated Emissions

47CFR Part 27 § 27.53 - Emission limits.

(g) For operations in the 600 MHz band and the 698-746 MHz band, the power of any emission outside a licensee's frequency band(s) of operation shall be attenuated below the transmitter power (P) within the licensed band(s) of operation, measured in watts, by at least 43 + 10 log (P) in Watts or -70.78 dBc. Compliance with this provision is based on the use of measurement instrumentation employing a resolution bandwidth of 100 kilohertz or greater. However, in the 100 kilohertz bands immediately outside and adjacent to a licensee's frequency block, a resolution bandwidth of at least 30 kHz may be employed.

And…

47CFR Part 2 § 2.1053 Measurements required: Field strength of spurious radiation.

(a) Measurements shall be made to detect spurious emissions that may be radiated directly from the cabinet, control circuits, power leads, or intermediate circuit elements under normal conditions of installation and operation. Curves or equivalent data shall be supplied showing the magnitude of each harmonic and other spurious emission. For this test, single sideband, independent sideband, and controlled carrier transmitters shall be modulated under the conditions specified in paragraph (c) of § 2.1049, as appropriate. For equipment operating on frequencies below 890 MHz, an open field test is normally required, with the measuring instrument antenna located in the far-field at all test frequencies. In the event it is either impractical or impossible to make open field measurements (e.g. a broadcast transmitter installed in a building) measurements will be accepted of the equipment as installed. Such measurements must be accompanied by a description of the site where the measurements were made showing the location of any possible source of reflections which might distort the field strength measurements. Information submitted shall include the relative radiated power of each spurious emission with reference to the rated power output of the transmitter, assuming all emissions are radiated from half wave dipole antennas.

5.4.1 Radiated Emissions at Antenna Terminals

Method of Measurement

Using the test set-up as shown in Figure 4-4, the spectrum analyzer was used to measure the out of band emissions at -3.1 MHz and +3.1 MHz from the 6 MHz channel edges. For this test the EUT was modulated with an OFDM waveform using an ATSC 3.0 compliant exciter. Using the analyzer the EUT was verified to have emissions below the specification of 43 + 10 log (P) Watts -70.78 dBc when using a 30 kHz resolution bandwidth on the analyzer. An offset value of 10dB was used to consider the difference between peak power and the average power which is shown in Figure 5-6. All other spurious output was well below the -70.78 dBc minimum.

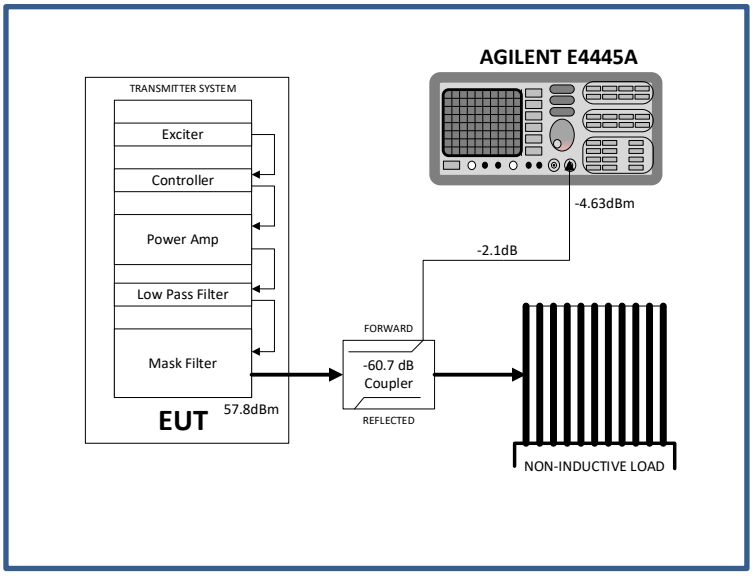

Figure 5-5 Test Set-Up for Measuring Radiated Emissions at Antenna Terminals

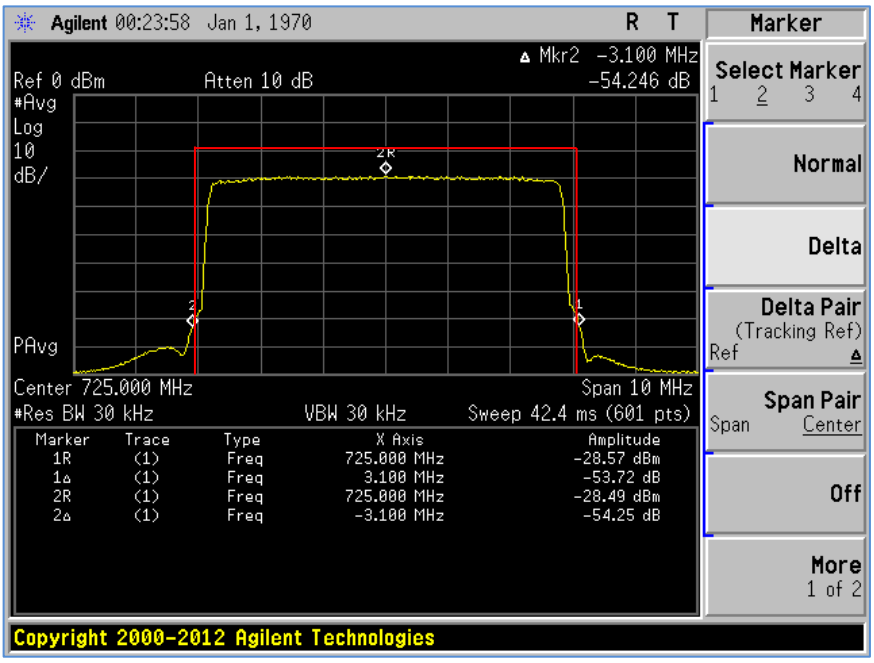

Figure 5-6 Out of Band Spectral Mask Measurements

Spurious Rejection at the Band Edge		
Average Power Output In Watts	600	Watts
Average Power Output In dBm	57.78	dBm
OFDM Peak to Average Power Ratio	10.00	dB
Total Peak Power in dBm	67.78	dBm
Total Peak Power in Watts	5997.51	Watts
Spurious = 43 + 10 LOG(600 Watts)	70.78	dB-LIMIT
-3.10 MHz Band Edge Rejection	-53.72	dB
Analyzer Correction Factor[1]	-23.01	dB
Total Spurious Attenuation	76.73	dB
Out of Band Spurious Limit	-70.78	dB
Performance Better Than Limit	5.95	PASS
+3.10 MHz Band Edge Rejection	-54.25	dB
Analyzer Correction Factor[1]	-23.01	dB
Total Spurious Attenuation	77.26	dB
Out of Band Spurious Limit	-70.78	dB
Performance Better Than Limit	6.48	PASS
[1]Note: CF=10 * LOG RBW(30 kHz)/BW(6 MHz)		

Table 5-2 Radiated Emissions at the Band Edge

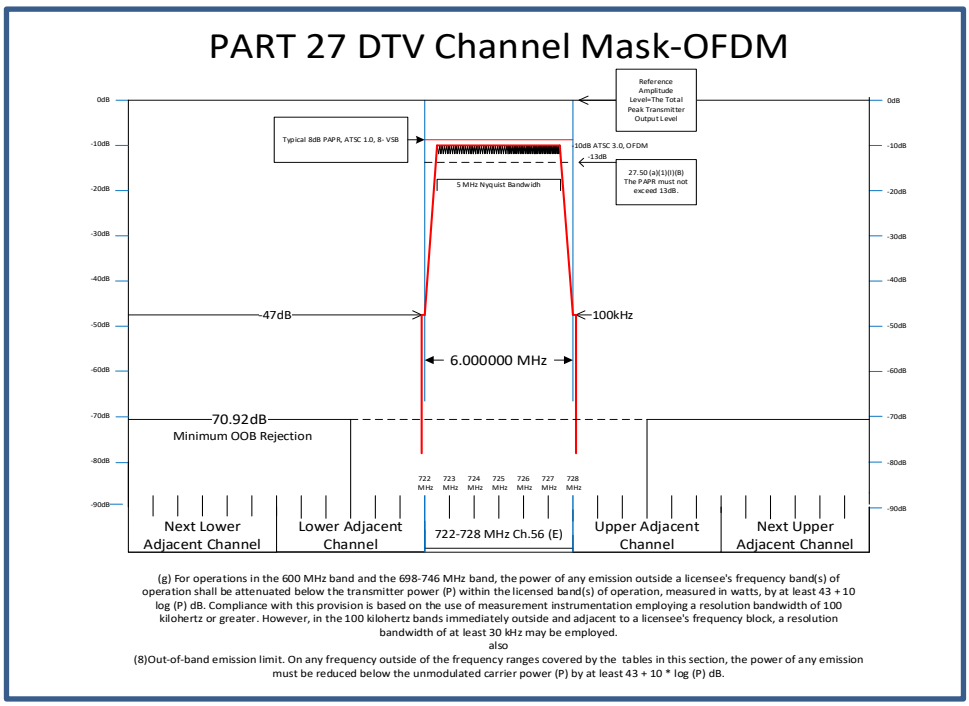

Figure 5-8 FCC Part 27 Spectral Mask

5.4.2 Harmonic Measurement at Antenna Terminals

The harmonic output at the antenna terminals was also measured with the spectrum analyzer again with the test set-up shown in Figure 5-1. Harmonic Output Amplitudes are referenced to the peak carrier output were made out to the 10th harmonic of the 735 MHz fundamental frequency. All spurious emissions must be attenuated below -70.78 dBc. Also measurements were taken at the sub-harmonic frequency. The results of these tests are shown in the following table 5-3.

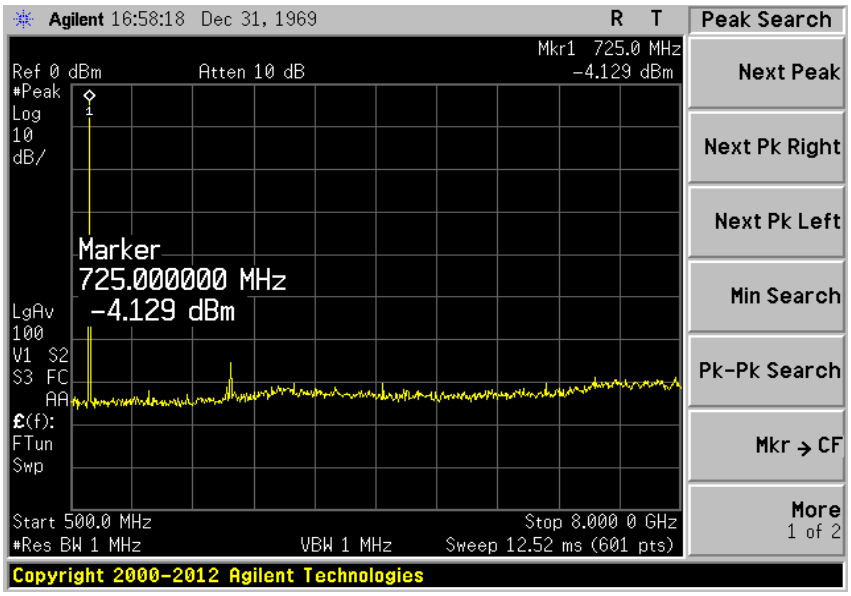

Figure 5-9 Harmonic Emissions at Antenna Terminals

Harmonic Levels										
Harmonic	Frequency MHz	Raw Reading dBm	Cable Loss dB	Coupler Atten dB	Level dBm	Measurement Type	Line	Limit 70.78dBc dBm below fundamental	Margin from Limit dB	Pass /Fail
Sub	362.5	-74.324	1.3	60.79	-12.234	Peak	RF FWD port A	70.78	-3.544	Pass
Fundamental	725	-4.129	1.7	60.79	58.361	Peak	RF FWD port A	N/a	N/a	N/a
2	1450	-71.812	2.61	60.79	-8.412	Peak	RF FWD port A	70.78	-1.032	Pass
3	2175	-74.424	3.24	60.79	-10.394	Peak	RF FWD port A	70.78	-3.644	Pass
4	2900	-71.878	3.43	60.79	-7.658	Peak	RF FWD port A	70.78	-1.098	Pass
5	3625	-73.573	3.38	60.79	-9.403	Peak	RF FWD port A	70.78	-2.793	Pass
6	4350	-73.602	3.29	60.79	-9.522	Peak	RF FWD port A	70.78	-2.822	Pass
7	5075	-72.214	3.19	60.79	-8.234	Peak	RF FWD port A	70.78	-1.434	Pass
8	5800	-72.221	2.96	60.79	-8.471	Peak	RF FWD port A	70.78	-1.441	Pass
9	6525	-73.416	2.83	60.79	-9.796	Peak	RF FWD port A	70.78	-2.636	Pass
10	7250	-70.848	2.72	60.79	-7.338	Peak	RF FWD port A	70.78	-0.068	Pass

Table 5-3 Harmonic Levels to 10th Harmonic

In no case were the Harmonic Emissions greater than -70.78 dBc below the average radiated power of the fundamental frequency of 725 MHz.

5.4.3 Protection to Radio Navigation Satellite Services (GNSS/GPS)

Method of Measurement

Tests were performed to confirm compliance with FCC Rule Part 27 § 27.53, that spurious output in the GPS Band at the antenna terminals was attenuated at least 70.78dBc ("dBc" is below carrier/fundamental). To confirm compliance with this specification, the test setup depicted in Figure 4-4 was again used. The EC701-HP was modulated with an OFDM waveform generated by an ATSC 3.0 compliant unit. Power output of the transmitter was adjusted so as to generate a 600 watt (57.8 dBm) output measured at the output of the mask filter. The spurious output of the EUT into the GPS band was then measured. The results are displayed on the spectrum analyzer plot labelled 4-6. The two GPS frequencies were closely inspected, 1227.60 MHz, and 1575.42 MHz. In no case were there spurious outputs above the -70.78 dBc limit threshold.

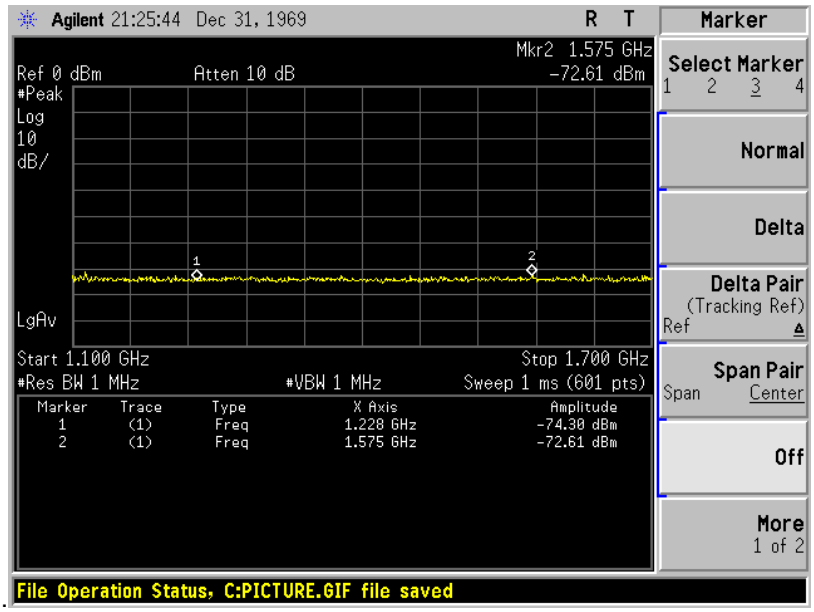

Figure 5-10 Radiation into Radio Navigation Satellite Services (GNSS/GPS)

5.4.4 Field Strength of Radiated Spurious Emissions

47CFR Part 2 § 2.1053 Measurements requires that measurements made to detect spurious emissions that may be radiated directly from the cabinet, control circuits, power leads, or intermediate circuit elements under normal conditions of installation and operation.

The captured level in dBuV/m can be converted directly to dBm EIRP with the following formula:
EIRP (dBm) = ~~e~~ E (dBuV/m) + 20LOG D -104.77. (Where E=dBuV/m and D=Distance)

The spectrum analyzer RBW settings for the three tests per CISPR C63: 2014 shall be as follows:

Measurement frequency	Minimum resolution bandwidth
Below 30 MHz	10 kHz
30 MHz to 1000 MHz	100 kHz
Above 1000 MHz	1 MHz

Table 5-4 Spectrum Analyzer RBW Settings for Radiated Spurious Tests

The EUT was placed in a 3 Meter Anechoic Test Chamber for measurement of the accidental Radiated Spurious Emissions. There were three separate tests conducted to determine the amplitude of the emissions. The first test was below 30 MHz, the second test tested 30 MHz to 1 GHz, and the third test above 1 GHz to the 10th harmonic of the fundamental at 7.250 GHz. A test set-up diagram for each test is presented below. Emissions were measured with a HP 7405 spectrum analyzer.

Method of Measurement 30 MHz to 1 GHz

To assure compliance with ANSI standard C63.4:2014 sec. 13.4 the following procedure was used. The preliminary (pre-scan) radiated measurements were performed at the measurement distance of 3 Meters. The loop antenna used in the below 30 MHz testing was replaced with a Bi-Log antenna and distance adjusted appropriately. The antenna was adjusted to locate the maximum emission amplitude. The antenna mast was also raised and lowered to peak the amplitude of the measured emissions, and the turntable rotated to locate the emissions with the most amplitude. The measurement is performed with quasi-peak detection and the RBW set to 120 kHz. The antenna height and the turntable rotation is adjusted until the maximum amplitude value is found on the spectrum analyzer. The measurements were then recorded.

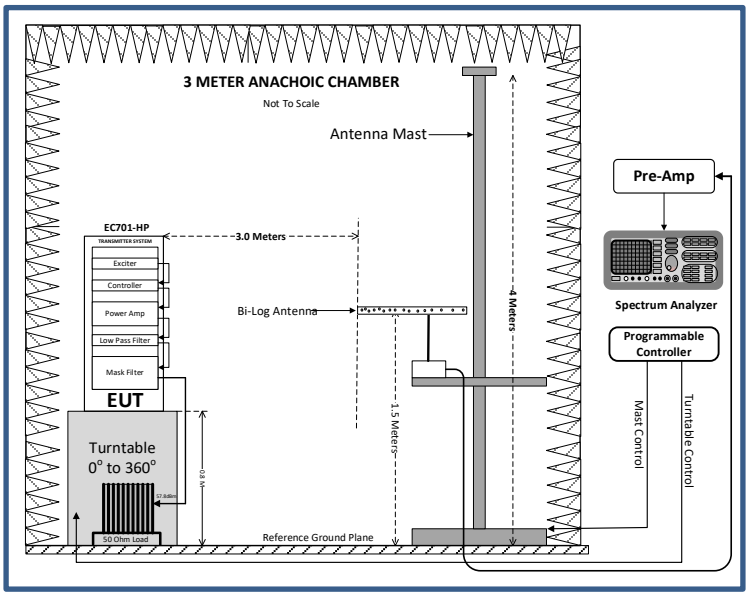

Figure 5-11 Test Set-Up for Radiated Emissions 30 MHz to 1 GHz

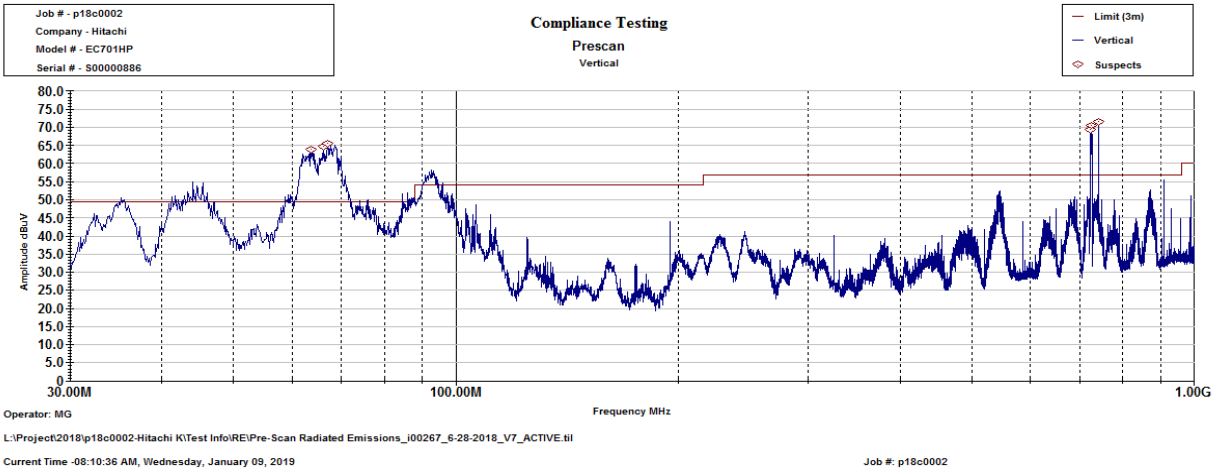

Figure 5-12 Pre-Scan for Radiated Emissions 30 MHz to 1 GHz

Peak #	Frequency	Cable Loss dB	Pre-amplifier dB	Antenna Factor dB/m	Level dBuV/m	EIRP dBm	Measure Type	Polarity	Height CM	Azmith	Part 27 Mask Limit -dB	Margin dB	Pass /Fail	Exceptions
1	63.726	0.85	26.6	11.96	56.23	-39.00	Average	V	100	187	-70.78	31.78	Pass	
2	66.176	0.85	26.6	11.96	55.28	-39.95	Average	V	100	214	-70.78	30.83	Pass	
3	66.989	0.85	26.6	11.96	55.14	-40.09	Average	V	100	224	-70.78	30.69	Pass	
4	723.1278	2.3	26.35	24.29	51.25	-43.98	Average	V	108	184	-70.78	26.80	Pass	Fundamental
5	724.7857	2.3	26.35	24.29	51.75	-43.48	Average	V	108	176	-70.78	27.30	Pass	Fundamental
6	741.397	2.3	26.37	24.29	60.75	-34.48	Average	V	100	179	-70.78	36.30	Pass	Fundamental
7	63.726	0.85	26.6	11.96	69.72	-25.51	Quasi-Peak	V	100	187	-70.78	45.27	Pass	
8	66.176	0.85	26.6	11.96	62.65	-32.58	Quasi-Peak	V	100	214	-70.78	38.20	Pass	
9	66.989	0.85	26.6	11.96	62.78	-32.45	Quasi-Peak	V	100	224	-70.78	38.33	Pass	
10	723.1278	2.3	26.35	24.29	57.57	-37.66	Quasi-Peak	V	108	184	-70.78	33.12	Pass	
11	724.7857	2.3	26.35	24.29	58.19	-37.04	Quasi-Peak	V	108	176	-70.78	33.74	Pass	
12	741.397	2.3	26.37	24.29	60.85	-34.38	Quasi-Peak	V	100	179	-70.78	36.40	Pass	

Table 5-5 Radiated Emissions Measurement Data Vertical 30 MHz to 1 GHz

Peak #	Frequency MHz	Cable Loss dB	Amplifier dB	Antenna Factor dB/m	Level dBuV	dBm EIRP	Measure Type	Polarity	Height CM	Azmith	Mask Limit -dB	Margin dB	Pass /Fail	Exceptions
1	63.726	0.85	26.60	11.96	54.46	-40.77	Average	H	373	118	-70.78	30.01	Pass	
2	66.176	0.85	26.60	11.96	55.08	-40.15	Average	H	246	153	-70.78	30.63	Pass	
3	92.764	0.85	26.54	12.62	55.78	-39.45	Average	H	264	121	-70.78	31.33	Pass	
4	723.1278	2.30	26.35	24.29	55.11	-40.12	Average	H	100	155	-70.78	30.66	Pass	Fundamental
5	724.7857	2.30	26.35	24.29	54.51	-40.72	Average	H	100	161	-70.78	30.06	Pass	Fundamental
6	741.397	2.30	26.35	24.29	66.99	-28.24	Average	H	100	158	-70.78	42.54	Pass	Fundamental
7	63.726	0.85	26.60	11.96	61.31	-33.92	Quasi-Peak	H	373	118	-70.78	36.86	Pass	
8	66.176	0.85	26.60	11.96	62.87	-32.36	Quasi-Peak	H	246	153	-70.78	38.42	Pass	
9	92.764	0.85	26.54	12.62	63.85	-31.38	Quasi-Peak	H	264	121	-70.78	39.40	Pass	
10	723.1278	2.30	26.35	24.29	61.43	-33.80	Quasi-Peak	H	100	155	-70.78	36.98	Pass	
11	724.7857	2.30	26.35	24.29	60.70	-34.53	Quasi-Peak	H	100	161	-70.78	36.25	Pass	
12	741.397	2.30	26.35	24.29	67.05	-28.18	Quasi-Peak	H	100	158	-70.78	42.60	Pass	

Table 5-6 Radiated Emissions Measurement Data Horizontal 30 MHz to 1 GHz

Method of Measurement above 1 GHz

In accordance with CISPR C63.4:2014, the measurement is performed using a spectrum analyzer scanning the emissions up to the 10th harmonic of the EUT fundamental frequency. For this measurement the peak detector is used for the Peak limit and RBW is set to 1 MHz, and VBW is set to 3*RBW, however VBW cannot be smaller than 1/T where T=the shortest pulse width. The antenna height and turntable is adjusted until the maximum power value is found on the spectrum analyzer, and the measured value is reported. The test set-up shown in Figure 5-13 is used for this test.

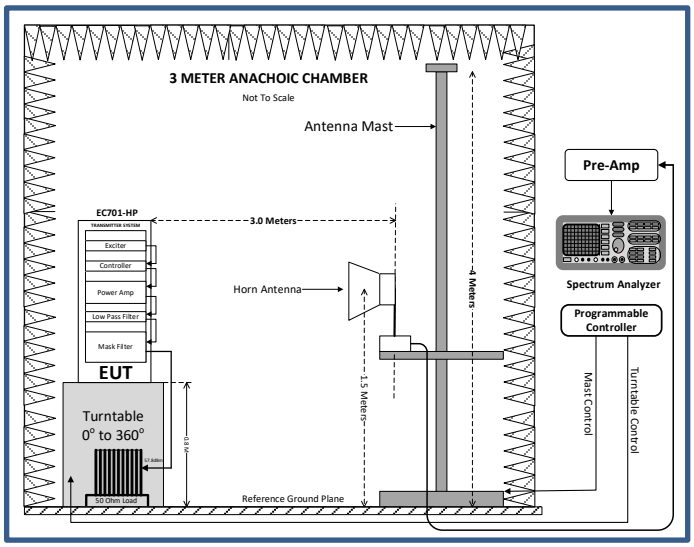

Figure 5-13 Test Set-Up for Radiated Emissions Above 1 GHz

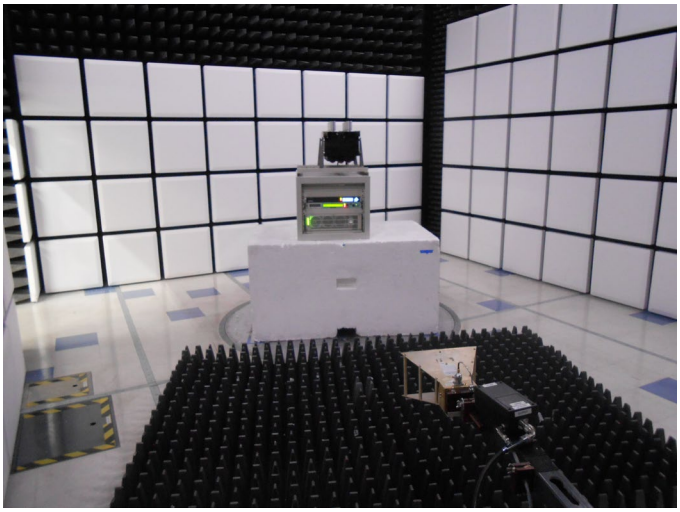

Figure 5-14 Test Set-Up for Radiated Emissions Above 1 GHz

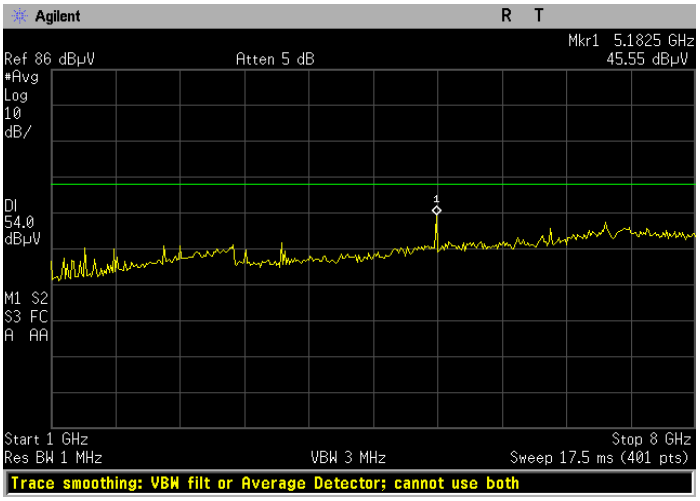

Figure 5-15 Test Plot for Horizontal Radiated Emissions Above 1 GHz

Peak #	Frequency MHz	Raw Reading dBuV	Cable Loss dB	Amplifier dB	Antenna Factor dB/m	Level dBuV	Measurement Type	Polarity	Height CM	Azmith	Class A Limit dBuV	Margin dB	Pass /Fail
1	5182.5	29.158	6.6	43.7	33.528	45.93	Average	H	149	160	54	-8.07	Pass
2	3502.5	17.877	5.12	43.7	30.887	35.81	Average	H	311	157	54	-18.19	Pass
3	2400	27.28	4.31	43.4	27.98	47.01	Average	H	100	163	54	-6.99	Pass
4	2225	20.134	4.14	43.8	27.784	40.29	Average	H	111	160	54	-13.71	Pass
5	1682.5	15.705	3.45	43.5	25.255	37.4	Average	H	100	143	54	-16.6	Pass
6	1367.5	19.343	3.08	43.5	25.163	40.76	Average	H	136	156	54	-13.24	Pass
7	5182.5	29.418	6.6	43.7	33.528	46.19	Quasi-Peak	H	149	160	54	-7.81	Pass
8	3502.5	19.177	5.12	43.7	30.887	37.11	Quasi-Peak	H	311	157	54	-16.89	Pass
9	2400	27.4	4.31	43.4	27.98	47.13	Quasi-Peak	H	100	163	54	-6.87	Pass
10	2225	20.534	4.14	43.8	27.784	40.69	Quasi-Peak	H	111	160	54	-13.31	Pass
11	1682.5	16.205	3.45	43.5	25.255	37.9	Quasi-Peak	H	100	143	54	-16.1	Pass
12	1367.5	19.643	3.08	43.5	25.163	41.06	Quasi-Peak	H	136	156	54	-12.94	Pass

Table 5-7 Test Data for Horizontal Radiated Emissions Measurement Above 1 GHz

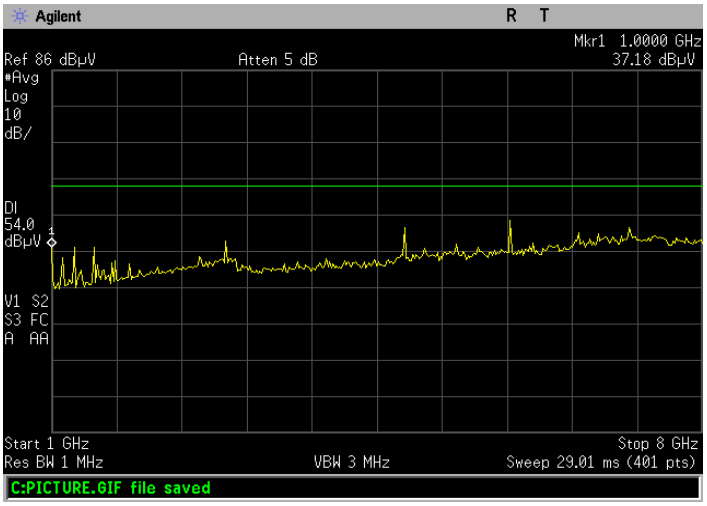

Figure 5-16 Vertical Radiated Emissions Plot Above 1 GHz

Peak #	Frequency MHz	Raw Reading dBuV	Cable Loss dB	Amplifier dB	Antenna Factor dB/m	Level dBuV	Measurement Type	Polarity	Height	Azmith	Class A Limit dBuV	Margin dB	Pass /Fail
1	5935	35.128	6.87	42.5	34.118	50.38	Average	V	100	360	54	-3.62	Pass
2	4797.5	29.815	6.29	43.5	32.885	46.72	Average	V	108	169	54	-7.28	Pass
3	2872.5	22.251	4.79	43	29.801	40.24	Average	V	108	158	54	-13.76	Pass
4	1455	21.678	3.16	43.3	24.958	43.18	Average	V	172	0	54	-10.82	Pass
5	1245	30.8	2.9	43.5	25.12	52.08	Average	V	227	328	54	-1.92	Pass
6	1000	7.581	2.64	43.5	23.971	29.75	Average	V	117	156	54	-24.25	Pass
7	5935	35.258	6.87	42.5	34.118	50.51	Quasi-Peak	V	100	360	54	-3.49	Pass
8	4797.5	29.955	6.29	43.5	32.885	46.86	Quasi-Peak	V	108	169	54	-7.14	Pass
9	2872.5	22.591	4.79	43	29.801	40.58	Quasi-Peak	V	108	158	54	-13.42	Pass
10	1455	21.678	3.16	43.3	24.958	43.18	Quasi-Peak	V	172	0	54	-10.82	Pass
11	1245	30.8	2.9	43.5	25.12	52.08	Quasi-Peak	V	227	328	54	-1.92	Pass
12	1000	10.761	2.64	43.5	23.971	32.93	Quasi-Peak	V	117	156	54	-21.07	Pass

Table 5-8 Vertical Radiated Emissions Measurement Data Above 1 GHz

6.0 FREQUENCY STABILITY

47CFR PART 2 §2.1055

6.1.1 Frequency Drift over Temperature

(a) The frequency stability shall be measured with variation of ambient temperature as follows:

(3) From 0° to + 50° centigrade for equipment to be licensed for use in the Radio Broadcast Services under part 73 of this chapter.

(b) Frequency measurements shall be made at the extremes of the specified temperature range and at intervals of not more than 10° centigrade through the range. A period of time sufficient to stabilize all of the components of the oscillator circuit at each temperature level shall be allowed prior to frequency measurement. The short term transient effects on the frequency of the transmitter due to keying (except for broadcast transmitters) and any heating element cycling normally occurring at each ambient temperature level also shall be shown. Only the portion or portions of the transmitter containing the frequency determining and stabilizing circuitry need be subjected to the temperature variation test.

The carrier frequency stability is the ability of the transmitter to maintain an assigned carrier frequency.

The EC701-HP transmitter utilizes an exciter which is the only frequency determining element of the system. The exciter utilizes an ovenized and compensated oscillator and a Phase Locked Loop (PLL) frequency control system which is extremely frequency stable due the function of the PLL as a self-correcting oscillator circuit. In addition the PLL may be locked to a precision 10 MHz reference frequency to make it even more stable.

Method of Measurement

Frequency Drift over Temperature

The exciter was removed from the system rack and placed in a temperature chamber which is used to control the ambient temperature of the EUT. The spectrum analyzer was utilized to measure the fundamental frequency. The analyzer was locked to a precision 10 MHz source so the only potential drift element was the fundamental frequency oscillator in the exciter (EUT). During the tests, the exciter was not connected to a reference so that the worst case drift could be measured.

The temperature was initially set to °C and a 2-hour period was observed for stabilization of the EUT. The frequency stability was measured within one minute after application of primary power to the transmitter. Then temperature was raised at intervals of 10 degrees centigrade through the 50 degree range. A ½-hour period was observed to stabilize the EUT at each measurement step and the frequency stability was measured within one minute after application of primary power to the transmitter. The measurement limit for this test is ±1kHz.

The following table shows the test results for the measurement of drift over temperature.

Temp	$Freq_{REF}$	$Freq_{MEAS}$	Drift	Pass/Fail
0°	725.000	725.000	0Hz	Pass
10°	725.000	725.000	0Hz	Pass
20°	725.000	725.000	0Hz	Pass
30°	725.000	725.000	0Hz	Pass
40°	725.000	725.000	0Hz	Pass
50°	725.000	725.000	0Hz	Pass

Table 6-1 Frequency Drift over Temperature

6.1.2 Frequency Drift over Voltage Fluctuations

Additionally, the power supply voltage of the EUT was varied +/-15% nominal input voltage using a Variac to control the voltage and a digital VOM to measure the voltage input to the EUT.

Method of Measurement

Using the Variac, the EUT supply voltage of 208VAC was varied through the range and the resultant frequency drift from the reference value of 725.00 MHz was measured with the spectrum analyzer. The results of this test are shown in Table 6-2. The measurement limit for this test is ±1kHz.

% of Primary Voltage	Measured Voltage	Measured Frequency	Frequency Drift	Pass/Fail
85%	176.800	725.000	0Hz	Pass
90%	187.200	725.000	0Hz	Pass
95%	197.600	725.000	0Hz	Pass
100%	208.000	725.000	0Hz	Pass
105%	218.400	725.000	0Hz	Pass
110%	228.800	725.000	0Hz	Pass
115%	239.200	725.000	0Hz	Pass

Table 6-2 Frequency Drift over Voltage

7.0 MEASUREMENT UNCERTAINTY

The following table 5-1 lists the laboratory standards of measurement uncertainty for Compliance Testing LLC.

While the table shows some results of measurement uncertainty for test items not applicable to this report, all applicable measurement uncertainty values are listed in the table.

Emissions			
Test Item	**Frequency Range**	**Description**	**Uncertainty**
Conducted Emissions (AC Line)	150KHz – 30MHz	Confidence level of approximately 95% (in the case where distributions are normal), with a coverage factor of 2	±3.5dB
Conducted Emissions (Signal Line)	150KHz – 30MHz		±3.5dB
Radiated Spurious Emissions	30MHz – 1GHz	Confidence level of approximately 95% (in the case where distributions are normal), with a coverage factor of 2 (for EUTs < 0.5m X 0.5m X 0.5m)	+5.6dB/-4.5dB
Radiated Spurious Emissions	1GHz – 6Ghz		+4.3dB/-4.1dB
Current Harmonics	50Hz -60Hz	Confidence level of approximately 95% (in the case where distributions are normal), with a coverage factor of 2	95%
Voltage Flicker	50Hz-60Hz		95%
Immunity			
Test Item	**Severity Levels**	**Description**	**Uncertainty**
Electro-Static Discharge	±2,kv - ±8kV	Confidence level of approximately 95% (in the case where distributions are normal), with a coverage factor of 2	Con: ±2.6% Air: ±0.15%
Radiated Immunity	80 MHz – 1GHz 3V/m & 10V/m		±1.64dB
Radiated Immunity	1GHz – 6GHz 3V/m & 10V/m		±1.98dB
Electrical Fast Transients (AC Line)	±500V - ±2kV @ 5kHz		Voltage: ±2.5% Rep Rate: ±0.53%
Electrical Fast Transients (Signal Line)	±500V - ±2kV @ 5kHz		Voltage: ±2.5% Rep Rate: ±0.53%
Surges (AC Line)	±500V - ±4kV, 1.2/50uS		Peak: ±2.5%

Surges (Signal Line)	±500V - ±4kV 1.2/50uS, 10/700uS		Peak: ±2.5%
Conducted Immunity (AC Line)	150kHz – 240MHz 3Vrms & 10Vrms		±1.36dB
Conducted Immunity (Signal Line)	150kHz – 240MHz 3Vrms & 10Vrms		±3.25dB
Power Frequency Magnetic	1A/m – 50A/m		±0.4%
Voltage Dip & Interruptions	100%, 70%, 40%, 0%		±1.2%

Table 7-1 List of Measurement Uncertainty Values

8.0 TEST REPORT SUMMARY

This report demonstrates that the EC701-HP transmitter system passes all of the FCC Type Acceptance Criteria for devices utilized under FCC Rule Part 27. Peak and average power outputs were verified with direct power measurements at UHF. Measurements of spurious emissions at the RF output indicated no emissions above that specified in the applicable rules. Conducted Emissions and Field strength measurements of spurious emissions revealed no detectable emissions above the 43 + 10 * LOG (P) value of -70.78 dBc ("dBc" is below carrier/fundamental).

END-OF-REPORT