Operation Manual

HITACHI
Inspire the Next

UHF Digital TV Transmitters
ATSC 3.0: 150 to 300 Watts RMS
ATSC 1.0: 170 to 350 Watts RMS
E-Compact Medium Power Series

EC702MP
EC704MP

Read before handling the equipment.

W A R N I N G

All rights are reserved to Hitachi Kokusai Linear Electronic Equipment S/A, thus any reproduction, adaptation, translation or misuse of this Manual without prior written permission is prohibited, except as permitted by copyright laws.

Operation Manual
UHF Digital TV Transmitters
ATSC 3.0 • 150 to 300 Watts RMS
ATSC 1.0 • 170 to 350 Watts RMS
E-Compact Medium Power Series
EC702MP • EC704MP

Rev R00 – EN-US

All rights reserved

Hitachi Kokusai Linear Equipamentos Eletrônicos S/A
CNPJ: 19.690.445/0001-79
Rodovia BR 459, Km 121, 121A – Córrego Raso - Santa Rita do Sapucaí - MG - Brazil – CEP 37540-000
Phone: +55 35 3473 3473 - linear@linear.com.br
www.hitachi-linear.com.br

CONTENTS

1. Index

CONTENTS....3

1. Index....3
1. About this Manual....8
2. Basic Knowledge Required....9
3. Structure....9

Section 1 - Care, Warranty, and Service....10

1. Care and Safety....10
2. Warranty....11
2.1 FCC Compliance....11
3. Technical Assistance....12

Section 2 - Minimum Installation Requirements....13

1. Introduction....14
2. Minimum Requirements....14
2.1. AC Mains - Wire Gauge....14
2.2. Grounding....14
2.3. Stability....15
2.4. Insulation....15
2.5. Atmospheric Discharge Protection System....18
2.5.1 Lightning rods....18
2.5.2 Protectors....18
2.6 Air Conditioning....18
2.6.1 Temperature....18
2.6.2 Humidity....19
2.6.3 Cooling....19

Section 3 – E-Compact Medium Power Series UHF Digital TV Transmitters....20

1. Overview....20
2. Specifications....21
3. Construction....23
4. Footprint....26

5. Block Diagram 27
6. Main Modules 29
6.1. CM8001 Control Module (MOD GV 40056) 29
6.1.1. RF Input 29
6.1.2. Interfaces 30
6.1.3. Control System Functional Description 31
6.1.4. Control System Operation 32
6.1.4.1. Navigation 32
6.1.4.2. System Structure 34
[1000] - Main Menu ⇨ Setup Menu 34
[2000] - Main Menu ⇨ Measurements 35
[3000] - Main Menu ⇨ System Alarms/Log 38
EQUIPMENT ALARMS 39
POWER AMPLIFIERS DRAWERS ALARMS 41
BROWSER ALARMS STATUS 45
[4000] - Main Menu ⇨ Remote Access 46
6.1.5. Frontal Led Alarms 47
6.2. PA704MP / PA702MP Power Amplifier Module 48
6.2.1. Interfaces 49
6.2.2. Specifications 50
6.2.3. Power Amplifier Block Diagram 51
6.2.4. Signaling LEDs 55
6.2.5. Communication interface (COMM) 56
6.2.6. 1200 Watts Powers Supplies 56
6.2.7. Power Supply 1200Watts – MOD 40241: 58
6.3. EIA 1-5/8” low pass filter 59
6.3.1. Features 59
6.4. MOD 40215 EIA RF Output Line with Sample Probe 60
6.4.1. Features 60
6.5. AC Mains Protection Unit 62
6.5.1. Sparkover - Phase Surge Protection Device (SPD). 62
6.5.2. M208 Mains Protection Unit – 208VAC WILD LEG 64
6.5.3. B240 Mains Protection Unit –SINGLE PHASE 240 VAC 65
6.5.4. Changing AC Mains 66
6.6. Exciter Interface 67

Section 4 – Installation 68

1. Overview. 68
2. Inspection. 68
3. Installation Recommendations. 68
3.1. Preventive Protection 68
3.2. Tower 68
3.3. Fastening of cables, antennas and connectors 69
3.4. Indoors Equipment Installation 70
3.5. Equipment Grounding 70

3.6. Electric Installation Grounding 71
3.7. Power Supply 71
4. Equipment Assembly 72
4.1. Assembly 72
4.2. Ethernet Connections 81
4.3. Internal Ground Connections 81
4.4. AC Electrical Line Connection 82
4.4.1. Electrical line connection (EC70xMP) 82
Section 5 - Initial Activation 83
1. Overview. 83
2. Activation. 84
3. Main Operations. 86
3.1. Power Changing 86
3.2. Communication 86
4. Forbidden operations 86
5. Protections 87
5.1. Reflected Power 87
5.2. Over-excitation 87
5.3. AC Mains Line Protection 87
5.4. Transmitter Operating Temperature Configuration 88
Section 6 - WEB Interface 89
1. Overview 89
2. Configuring the System 90
3. Browsing the System 90
3.1. Access Password 90
3.2. Startup 91
3.3. Alarms 91
3.3.1. Alarms 91
3.3.2. Alarm Log 92
3.3.3. Download Alarm Log 93
3.4. Setup 94
3.4.1. Power Setup 94
3.4.2. Transmitter 95
3.4.3. Exciter 95
3.4.4. File 95
3.5. Measurements 96
3.6. Power 97
3.6.1. Measurements 97
3.6.2. Cur. Alarms 98

3.6.3. Past Alarms 98
3.7. Remote 99
3.8. User 100

Section 7 – Preventive Maintenance 101

1. Overview 101
2. Preventive Maintenance 101
2.1. Cleaning 101
2.2. Visual Inspection 102
2.3. Reading Verification 102

Section 8 - Attachments 103

1. USA AC Mains Types for E-Compact Series 103

Abbreviations

1PPS	One Pulse per Second
A	Amperes
AC	Alternating Current
A-DPD	Adaptive Digital Pre-distortion
AF	After Filter
A.N.M.	Acima do Nível do Mar
ALC	Automatic Level Control
ASI	Asynchronous serial interface
ASL	Above Sea Level
ATSC	Advanced Television System Committee
BF	Before filter
BISS	Basic Interoperable Scrambling System
BTS	Broadcast Transport Stream
BTU	British Thermal Unit
CAM	Conditional Access Module
dB	Decibel
DC	Direct current
DDP	Potential Difference
DPD	Digital Pre distortion
DSP	Digital Signal Processing
DVB-S	Digital Video Broadcasting – Satellite
DVB-S2	Digital Video Broadcasting – Satellite – 2nd generation
FPGA	Field Programmable Gate Array
FWR	Forward
HKL	Hitachi Kokusai Linear
IP	Internet Protocol
ISDB-T	Integrated Services Digital Broadcasting Terrestrial (Brazil)
ISDB-Tb	Integrated Services Digital Broadcasting Terrestrial
LCD	Liquid Crystal Display.
LPC	Linear Pre correction
MCCB	Molded Case Circuit Breakers
MER	Modulation Error Rate
MFN	Multiple Frequency Network
MSps	Million Sample per Seconds
N/A	Not/Apply
NLPC	Non-Linear Pre Correction
PA	Power Amplifier
PCMCIA	Personal Computer Memory Card International Association
PFC	Power Factor Correction
PID	Packet Identifier
PLL	Phase Locked Loop
PS	Power Supply
PSI	Program-specific information
PSU	Power Supply Unit
PW	Power
RPM	Rotations Per Minute

RTP	Real-time Transport Protocol
RU	Rack Unit
SFN	Single Frequency Network
SI	Service Information
SNMP	Simple Network Management Protocol
SNR	Signal to Noise Ratio
TMCC	Transmission and Multiplexing Configuration Control
TS	Transport Stream
TSoIP	Transport Stream over Internet Protocol
U	RU - Rack Unit
UDP	User Datagram Protocol
UHF	Ultra High Frequency
UPS	Uninterruptable Power Supply
V	Volts
VAC	Volts Alternating Current
VGA	Variable Gain Amplifier
VGS	Voltage Gate Source
VSWR	Voltage Standing Wave Ratio
WxDxH	Width x Depth x Height

1. About this Manual

The purpose of this manual is to provide technical information required for the installation and operation of Medium Power E-Compact series UHF TV signal transmitters (digital ATSC).

EC702MP
150 W UHF ATSC 3.0 Transmitter (6-poles filter)
170 W UHF ATSC 1.0 Transmitter (6-poles filter)

EC704MP
300 W UHF ATSC 3.0 Transmitter (6-poles filter)
350 W UHF ATSC 1.0 Transmitter (6-poles filter)

Hitachi Kokusai Linear Electronic Equipment S/A recommends that you carefully read the sections of this manual before installing or operating this equipment.

This manual is intended for use by qualified, trained installers.

Read this manual before working with the product. For personal and system safety, as well as for optimum product performance, one must be sure to thoroughly understand the contents before installing, operating, or maintaining this product.

2. Basic Knowledge Required

The mandatory knowledge and skills to operate the equipment are as follow:

• Knowledge of electronic circuits of Radio Frequency;

• Knowledge of electricity and electrical systems;

• Knowledge of digital electronics;

• Conducting tests and Digital TV signals measurements in ATSC standard;

• Knowledge of transmission antenna;

• Experience operating radio frequency measurement equipment;

• Practice in the management of radio frequency measures equipment (spectrum Analyzer, RF power meter, Vector Network Analyzer, couplers, attenuators, etc).

3. Structure

This manual is comprised of seven (8) sections, which provide the following information:

Section 1 - Care, Warranty, and Service
This section indicates the necessary care with the equipment, warranty criteria and how to proceed if technical assistance is needed.

Section 2 - Minimum Installation Requirements
Comprises the minimum infrastructure requirements for installing these devices, such as AC power, protection against lightning and air conditioning.

Section 3 –E-Compact Medium Power Series UHF Digital TV Transmitter
Present all equipment characteristics, such as description, models, functional description and technical specifications of all models of E-Compact series Medium Power Transmitters.

Section 4 - Installation
This section provides procedures for physical and electrical installation.

Section 5 - Initial Activation
This section describes which steps to perform in the initial activation of the equipment.

Section 6 – WEB Interface
This section describes how the transmitter can be controlled and monitored remotely, using a Web GUI interface.

Section 7 – Preventive Maintenance
Provides information for preventive maintenance.

Section 8 - Attachments
Additional information for this document.

Section 1 - Care, Warranty, and Service

1. Care and Safety

Never open the device: there is a risk of electric shock. If necessary, contact Hitachi Service.

Before Connecting the Machine to the AC Mains, one must ensure that the grid Voltage meets the equipment's settings.

Never expose the equipment to rain, moisture or direct sunlight, in order to avoiding risk of fire or electric shock.

Avoid risks of accidents at heights and with electricity. Always install or maintain this equipment by qualified technicians.

Never turn on the equipment without connecting it to an Antenna or RF Load. May cause serious damage to the Equipment.

Never unplug any Power Amplifier Drawer while the Transmitter is on. Risk of equipment damage.

2. Warranty.

1. All equipment shall have warranty coverage by the supplier against manufacturing or assembly faults conducted by the supplier, for the period of 12 months, counting from the issuing of the sales invoice. The period is irrevocable except in cases of extended warranty previously noted in contract.

2. During warranty time, the supplier will repair, with no additional charge, the faulty products, providing adjustments, replacing or re-manufacturing, of all the equipment or its modules and components that present unusual behavior;

2.1. The repaired/replaced products are covered for an additional period of 3 (three) months or up to the end of the original warranty time, taking into count the longer period;

2.2. If the additional 3 (three) months term, referred above, is higher than the original warranty term, the warranty will only extend to the repaired/replaced modules or components;

2.3. The warranty will become effective in the supplier's factory; therefore, it is not a responsibility of the supplier: the shipment of any modules, components or any other equipment or accessory. These expenses will be, when due, a responsibility of the Purchaser.

2.4. The Purchaser may choose a visit of the supplier's technical personnel, instead of submitting the goods for factory repair, although the expenses relative to transportation, lodge and nourishment of the supplier's technicians will occur at sole expense of the Purchaser, upon budget approval.

3. The supplier is relieved of the warranty terms in the hereinafter situations:

3.1. Faults or defects caused by AC Mains variation, atmospheric phenomena or accidental;

3.2. Faults or defects caused by inadequate installation of the goods, not complying with the OPERATING MANUAL(S) or by negligence of the minimum infrastructure requirements in the installation site, which is referred in the ANNEX 1 herein attached.

3.3. Faults or defects caused by inadequate usage of the products, not complying with the OPERATING MANUAL(S) or by lack of proper preventive maintenance recommended in the product's manual.

3.4. In event of the goods and its accessories are submitted to 3rd Party maintenance, unauthorized by the supplier, as well as removal or violation of its serial number.

4. The supplier shall employ, during warranty term, original parts and components listed by the product's manufacturer.

5. The technical assistance must be held by the SUPPLIER or its accredited personnel or companies, failing which will result in warranty voidance.

2.1 FCC Compliance

1. This equipment has been tested and found to comply with the limits for a Class A Digital device, pursuant to part 15 of the FCC Rules. These limits are designed to provide reasonable protection against harmful interference when the equipment is operated in a commercial environment. This equipment generates, uses, and can radiate radio frequency energy and, if not installed and used in accordance with the instruction manual, may cause harmful interference to radio communications. Operation of this equipment in a residential area is likely to cause harmful interference in which case the user will be required to correct the interference at his own expense. The antenna(s) used for this transmitter must be fixed-mounted on the outdoor permanent structures. RF exposure compliance is addressed at the time of licensing, as required by the responsible FCC Bureau(s), including antenna co-location requirements of §1.1307(b)(3).

2. Changes or modifications not expressly approved by Hitachi Kokusai Electric Comark LLC could void the user's authority to operate the equipment.

3. This device complies with part 15 of the FCC Rules. Operation is subject to the following two conditions: (1) This device may not cause harmful interference, and (2) this device must accept any interference received, including interference that may cause undesired operation.

3. Technical Assistance.

In our Quality Management System, since several devices are received without proper identification and explanations; we are now working with previous approval for maintenance devolution.
Therefore, in case of maintenance please contact:
Hitachi Kokusai Linear Equipamentos Eletrônicos S/A
Phone: 55 35 3473-3473 / Fax: 55 35 3473-3474 E-mail: manutencao@linear.com.br

And inform: Customer, Equipment Part Number, Serial Number and a brief explanation of the occurrence.

With this intel we shall send the ARM number (Authorization for Return of Material), which is mandatory to appear in the invoice.

Section 2 - Minimum Installation Requirements

W A R N I N G

MANDATORY CONDITIONS FOR TRANSMITTER INSTALATION, FOR VALIDATING THE WARRANTY TERMS

1. Proper grounding;
2. Proper lightning-rod;
3. Shelter with ventilation, footprint, and temperature in compliance with the transmitter’s standards.
4. Voltage regulator in compliance with transmitter’s consumption.

Noncompliance with any of above-mentioned terms will automatically result in the hereinafter suspension of the warranty terms.

1. Introduction.

This section provides information on the minimum installation requirements for E-Compact Series transmitters with recommendations on shelter, tower, antennas, cables, grounding, mains, transient preventions, etc.

2. Minimum Requirements.

2.1. AC Mains - Wire Gauge.

Consumption with the equipment running at its maximum power.

Current (A) on each wire:

About AC MAINS TYPE, see Section 8 – Attachments, USA AC Mains Types for E-Compact Series.

E-Compact Series - ATSC												
MODELO	M120			M208 / B240			T208 / T240			T380		
	(A) Typical	Wire diameter mm²	Wire diameter AWG	(A) Typical	Wire diameter mm²	Wire diameter AWG	(A) Typical	Wire diameter mm²	Wire diameter AWG	(A) Typical	Wire diameter mm²	Wire diameter AWG
EC702MP	6,3	4,17	11	3,6	3,31	12						
EC704MP				7,2	4,17	11						

Not available or uncommon use

The current quoted in the table is more loaded phase to sizing effect of conductors and protection.

Said gauge is the minimum recommended for the transmitter in question, if the cable length is large, consider voltage drop in the cable maximum of 5%

The section of the neutral conductor should be the same as the phase.

The section of the ground conductor has to be the same as the conductors phase.

2.2. Grounding.

The grounding system to which the Hitachi Kokusai Linear TV transmitter will be attached must be designed and implemented by a qualified professional. An improper grounding system may jeopardize the equipment as well as the lives-of the professionals working in the shelter. To be considered proper, the grounding must have a resistance of no more than 5 Ohms.

It is important to establish that all the devices involved in the transmission system are that the same potential, so that there is no DDP, favoring the equilibrium of the flow of the atmospheric load.

It is important to state that if there is a need for chemical alteration of the soil, in order to provide the lowest impedance, it establishes a temporary condition for not being part of the natural chemistry of the place, thus being naturally absorbed. In this condition, preventive soil analyzes should be conducted as preventive maintenance procedure.

2.3. Stability.

The voltages in each TV Transmitter phase must be stabilized. Use voltage stabilizers or stabilized uninterruptible power systems (UPSs) is necessary since these devices are capable of protecting the TV transmitter from power surges. The voltage stabilizer or UPS design must be of exclusive use to the Hitachi Kokusai Linear TV transmitter, and shall be sized to operate at least 30% above the kVA consumption specified by the TV transmitter. For example, for the TV transmitter with maximum consumption of 38kVA, a voltage stabilizer or 50kVA UPS should be used.

Input voltage variations above 15% of the rated values specified for the Hitachi Kokusai Linear TV transmitter may cause damage to the equipment and in this case will not be covered by the factory warranty. In addition, it is important to check the potential difference between the ground and neutral terminals (if any) that will be connected to the Hitachi Kokusai Linear TV transmitter. This potential difference should be at most 3V.

2.4. Insulation.

It is important to have isolation between energy stations of the shelter and the TV transmitter, which is achieved with the usage of isolator transformers. Thus guarantee that no AC Mains' transient coming from the shelter will be passed on to the TV transmitter or vice-versa. Besides, Hitachi Kokusai Linear' TV transmitter features switching power supplies that require purely sinusoidal power input, and voltage regulators or no-breaks without isolator transformers have no assurance of a purely sinusoidal outputs. The isolator transformer must also be exclusive to the TV transmitter and its dimensioning must use the same standards employed in the dimensioning of the voltage regulator or no-break, ie, at least 30% higher than the specified consumption TV transmitter's (KVA).

Recommendations.

1- We recommend that the transmitter "never see" the power grid directly.

2- We recommend the use of online double-conversion UPS and / or Delta-conversion online UPS built with transformer insulation and with power factor correction (PFC).

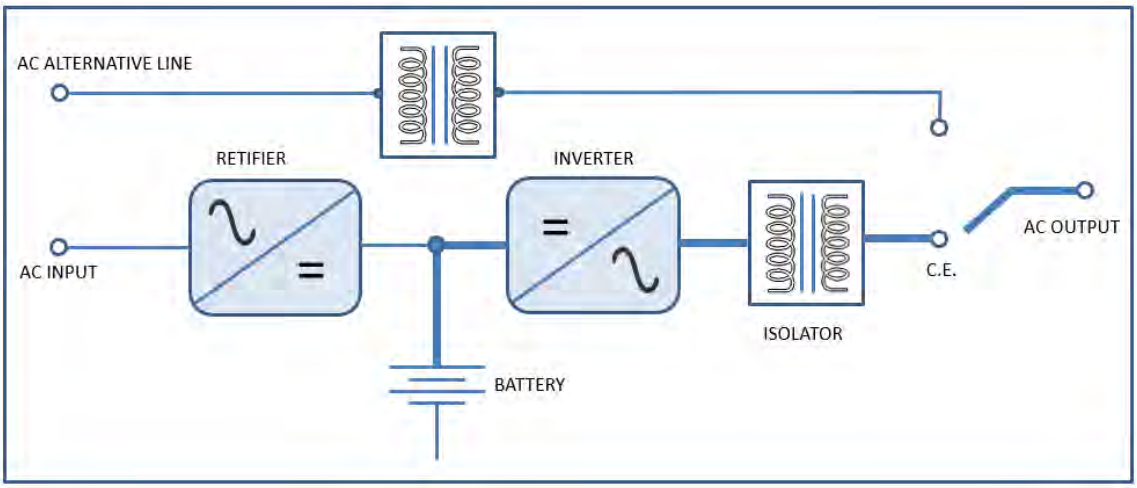

No break Example with Isolating Transformer

Benefits:

- These types of UPS bring great protection and insulation to the transmitter due to its mode of operation and design.
- The double conversion occurs because the AC network convert to DC and the DC voltage convert back to AC, which eliminates any disturbance in the AC mains when converted to DC, thus protecting the transmitter.

It is important to note that UPSs do not necessarily need to have a battery bank, thus minimizing the cost of the final product. This solution is much better than a conventional stabilizer due to double conversion as already explained.
- The correction of the power factor (PFC) in the no break is necessary to reduce the cost of the electric energy, because it reduces the reactive power (VAr), reducing the total power (VA).
It is important to emphasize that it is not efficient to have a transmitter with power factor correction (PFC) powered by a no-break without PFC, because all the advantage achieved by the transmitter is lost in the UPS, not resulting in energy savings. When this type of connection made, you actually have an excellent load (resistive behavior) for the no-break, but your power grid will see the entrance of the no break (without PFC, high consumption).

When we have a power factor correction (PFC) UPS, it will present an excellent behavior (low reactive power, low power consumption) to the network even if it is connected to a PFC-free transmitter, that is, it will correct the power factor of the entire system .

Nobreak capatibity.

Nobreak Power= $P_{TX} * (\cos \Phi * \eta_{(nobreak)})$

P_{TX}: Potência Real [W]

$\cos \Phi$: Power Factor Correciton

$\eta_{(nobreak)}$: Nobreak efficiency

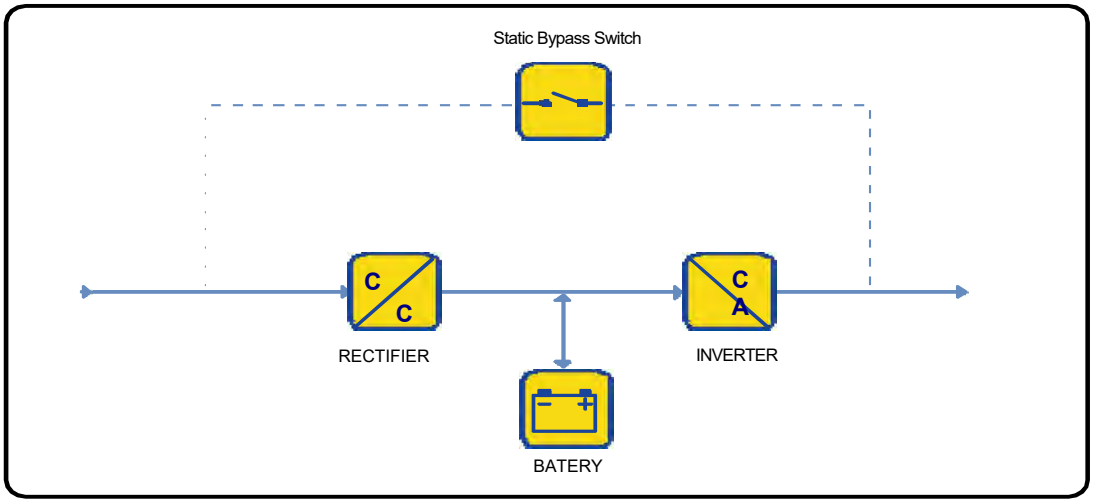

Double Conversion Online Nobreak

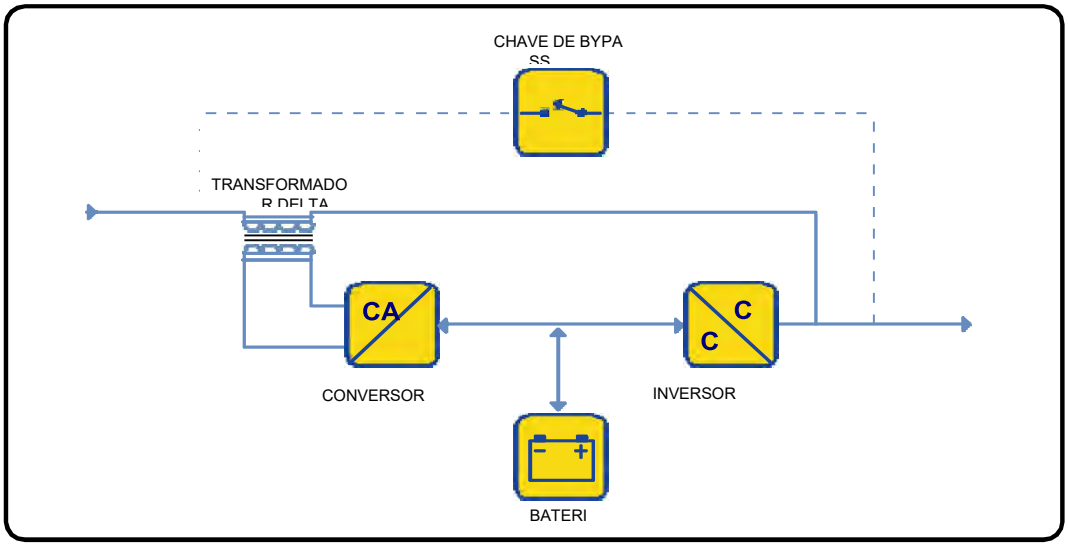

Delta Conversion Online Nobreak

2.5. Atmospheric Discharge Protection System.

2.5.1 Lightning rods.

The Atmospheric Discharge Protection System consists of the lightning rods and their elements. The tower and shelter where the equipment will be installed must be protected against atmospheric discharges by means of lightning arresters.

It is important to determine that all ferrous parts and accessories that make up the Atmospheric Discharge Protection System should be galvanized.

In the path comprised of the lightning rod to the drainage well, no splicing is allowed, much less pathways with acute angles (angles of less than 90º).

2.5.2 Protectors.

The use of coaxial protectors is advisable for cables connecting external devices (antennas, microwave heads, tower inverters) to the internal ones. These protectors are devices equipped with gas spark plug which shortens to earth any discharge occurred in the coaxial cable. They should kept in the shelter near the equipment and with the ground wire connected to the ground of the equipment rack.

It is favorable in hilltops and areas of many transmission sources, the use of Faraday's Ring or Cage, which in turn isolates the transmitter from the electromagnetic fields avoiding interference caused by induction.

2.6 Air Conditioning.

2.6.1 Temperature.

For better performance and longer equipment life, it is important that, under the shelter, the temperature is controlled strictly by means of air conditioners. For the shelter's design, one should consider the thermal dissipation specified for the transmitter (reported in BTU / h), the dissipation of the other devices inside the shelter, the thermal load generated by the solar incident and other thermal loads present in the shelter. In addition, it's recommended that the shelter's internal pressure be slightly positive to prevent the entry of contaminants. According to the transmission power, the internal temperature of the shelter should be:

• E-COMPACT LOW POWER TV TRANSMITTERS: from 0º to 35ºC

• E-COMPACT MEDIUM POWER TV TRANSMITTERS: from 0º to 30ºC

• E-COMPACT HIGH POWER TV TRANSMITTERS: 0º to 25ºC

If Hitachi Kokusai Linear equipment is damaged by the lack or inefficiency of the HVAC system, it will NOT be covered by the factory warranty.

2.6.2 Humidity.

Relative air humidity inside the shelter is also considered a critical factor for improved performance and longer equipment life. Hitachi Kokusai Linear equipment should operate in dry environments, which can also be achieved by the use of air conditioners. According to the transmission power, the relative humidity inside the shelter should be:

• E-COMPACT LOW POWER TV TRANSMITTERS: 0 to 90%

• E-COMPACT MEDIUM POWER AND HIGH POWER TV TRANSMITTERS: 0 to 80%

There must never be condensation since water can damage the internal circuits of the transmitter.

2.6.3 Cooling.

Cooling has to be always in "recirculate", with the air conditioning lowering the temperature of the room, without external air intake. For better performance of the cooling system, the air conditioner be installed in series with the transmitter cooling cycle, direct the output air conditioning flow to the front of the Hitachi Kokusai Linear TV Transmitter.

The physical installation of the transmitter should protect a free area around it for better cooling efficiency and access to maintenance.

Section 3 – E-Compact Medium Power Series UHF Digital TV Transmitters

1. Overview.

The E-Compact Medium Power family of air cooled Doherty solid-state transmitters from Hitachi Kokusai Linear was designed specifically for the repack market place. Its design is simple, rugged, reliable, and ultra-efficient. Advanced standard features are included to ensure:

- ensure maximum transmitter efficiency using Doherty amplifiers
- ensure maximum flexibility with broadband amplifier technology (470-806MHz)
- ensure optimum signal performance in all operating modes
- ensure maximum reliability for 100% power output
- ensure ease of initial setup and operation
- ensure ease of monitoring and diagnostics
- ensure flexible solutions for all installations

The E-Compact Medium Power Family of solid-state DTV transmitters includes two models that provide transmitter power outputs (TPO) from 150 to 300 watts ATSC 3.0. Each power amplifier module has an excellent power density, with 2RU and 19". Featuring high gain Broadband Doherty LDMOS configured for transmitting provides high efficiency and consumption cost reduction of up to 60% when compared to conventional transmitters. The final power amplifier configuration in parallel depending on output power level required. The transmitters are compliant with all FCC and ATSC requirements.

We recommend the use of the EXACT-V2 DTV driver with linearization circuits to compensate for linear and non-linear distortions for the E-Compact Medium Power line transmitters. EXACT-V2 is software upgradeable for compatibility with ATSC 3.0.

The E-Compact family of solid-state TV transmitters includes a human-machine interface via an LCD display on the front panel and menus activated by programmable keys. Alarm indicators and normal controls, as well as power readouts, are available on the LCD.

There are two basic E-Compact Medium Power transmitter equipment configurations available:

1) Single Drive = One exciter driving the amplifier chain (SD)
2) Dual Drive = Two exciters {main/standby selectable} driving the amplifier chain (DD)

2. Specifications

- ⇨ IP Input
- ⇨ Control Module present
- ⇨ Switcher Module present
- ⇨ Power amplifier drawer (one power module);
- ⇨ High efficiency with Doherty technology;
- ⇨ Air cooled;
- ⇨ Automatic Fan Speed Control providing low noise levels, energy saving and increased lifespan;
- ⇨ Power supplies featuring Power Factor Correction better than 0.95;
- ⇨ Measures and alarms through front display and keypad or remotely.
- ⇨ VSWR and Overdrive protection via hardware with power reduction;
- ⇨ Software oriented overheating protection for internal modules;
- ⇨ Adaptive Digital Pre-correction (Linear and No-Linear);
- ⇨ Telemetry: WEB Server/SNMP, for local or remote management;
- ⇨ AGING transistor compensation via exciter's front panel;
- ⇨ Automatic GM compensation with temperature;
- ⇨ Main Control Software, WEB Server and SNMP;
- ⇨ USB communication Drivers;
- ⇨ Passive elements: Low-pass filter, before and after-filter probes.

Optional:

- ⇨ Telemetry through GPRS interface;
- ⇨ Exciter
- ⇨ Exciter Redundancy;
- ⇨ Control Module Redundancy;
- ⇨ GPS time base (exciter's internal module).
- ⇨ EC702MP has redundant power supply option.

General RF Performance	
Modulation Standard	ATSC 3.0 A/300 / ATSC 1.0 A/53
RF Output Regulation	≤± 0.1 dB
UHF Operation Frequency	470MHz to 806MHz Ch14 to Ch69
Bandwidth	6 MHz
RF Input Level	0dBm
MER Performance ATSC 3.0 ATSC 1.0	 ≥33dB ≥36dB
Harmonics/Spurious	better than -60dBc
50Ω RF Output Connector	N-Female DIN 7/16” EIA 7/8” (flanged / unflanged) EIA 1-5/8” (flanged / unflanged)

General Electrical Features	
Power Requirement (specify configuration at equipment purchase order)	**Single Phase 240Vac**: 180~254VAC Between Both wire. **Single Phase 208Vac Wild Leg**º: 180~254VAC Between Phases to Neutral (using Delta Three Phase 240Vac).
Frequency AC mains	43 to 63Hz
Power Factor Correction	Typical 0.95, minimum 0.9

Interfaces	
Communication Interfaces	USB / Ethernet / SNMP
Format	Ethernet (IEEE 802.3u) 10Base-T/100Base-TX

Environment Features	
Operation altitude	up to 8200ft ASL
Environment temperature range	+32°F to +113ºF (+77°F recommended) 0ºC to +45ºC (+25°C recommended)
Environment humidity range	0 to 95% (non-condensing)
Power Amplifier Cooling	Forced ambient air, front to back flow using integral high volume fans

Model:	**EC702MP**		**EC704MP**	
Output power (W)³	B.F.¹	A.F.²	B.F.¹	A.F.²
ATSC 3.0	215	150	400	300
ATSC 1.0	225	170	450	350
Minimum operation power (W)				
ATSC 3.0	10		30	
ATSC 1.0	20		40	
AC mains	Single Phase 240Vac Single Phase 208Vac Wild Leg			
AC typical consumption (W)³				
ATSC 3.0	600		1200	
ATSC 1.0	750		1500	
Typical heat dissipation (BTU/h)³				
ATSC 3.0	1400		2800	
ATSC 1.0	1750		3500	
Width (in)	22.44			
Depth (in)	35.43			
Weight (pound)	143			

¹A.F.: After Filter
²B.F.: Before Filter
³May change depending on MER value, channel and output power.

3. Construction

The E-Compact family of medium power solid-state DTV transmitters provides maximum flexibility for site layout and installation. Transmitters are installed in custom designed 22” wide (19” panel opening) cabinets. Being available in two configurations depending on the output power: EC702MP ATSC Transmitter 170 W and EC704MP ATSC Transmistter 350 W.

The transmitter controller is contained in a 1RU chassis and the RF amplifier is contained in a separate 2RU chassis. The digital exciter is 1RU (not provided) for a total of 4RU or 8.75” of vertical panel space (single exciter version). An equipment rack cabinet (8RU) is supplied.

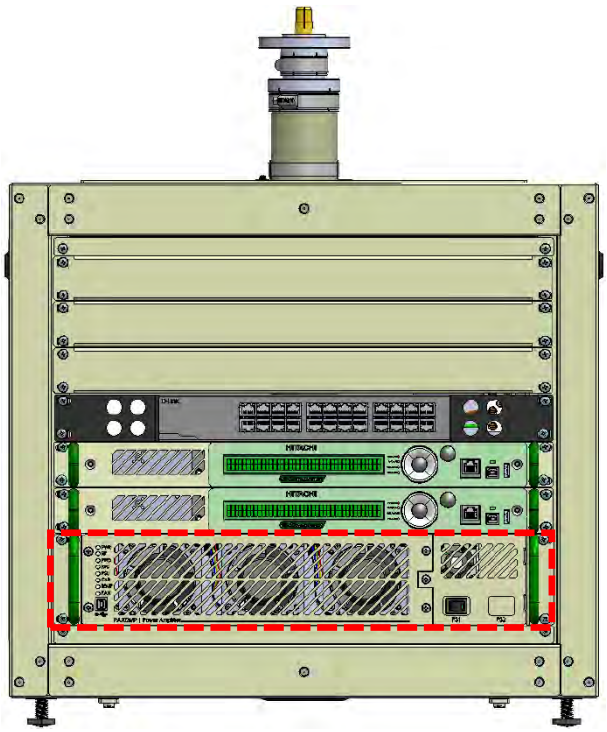

Power Amplifier

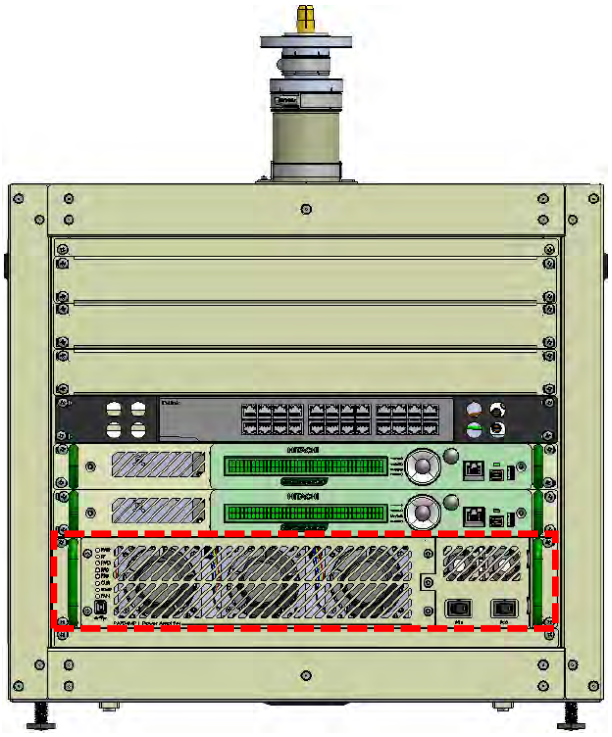

EC702MP
ATSC 3.0: 150W RMS BEFORE FILTER
ATSC 1.0: 170W RMS BEFORE FILTER

PA702MP Power Amplifier (MOD GV 40033A)

EC704MP
ATSC 3.0: 300W RMS BEFORE FILTER
ATSC 1.0: 350W RMS BEFORE FILTER

PA704MP Power Amplifier (MOD GV 40010)

The power supply redundancy option implemented only in EC702MP

REF	DESCRIPTION
01	Cabinet 8RU
02	1U slot void
03	Ethernet switch
04	Main CM8001 control module
05	Backup CM8001 Control Module
06	PA702MP – Power amplifier (EC702MP) PA704MP – Power amplifier (EC704MP)
07	MOD 40243 - EIA 1-5/8” low pass filter
08	MOD 40215 – RF sample EIA 1+5/8”
09	RF Spliter 1:2
10	MOD 40090A – Flyback 15/8V 25W
11	MOD 40032 – RF coaxial relay
12	AC mains protection unit

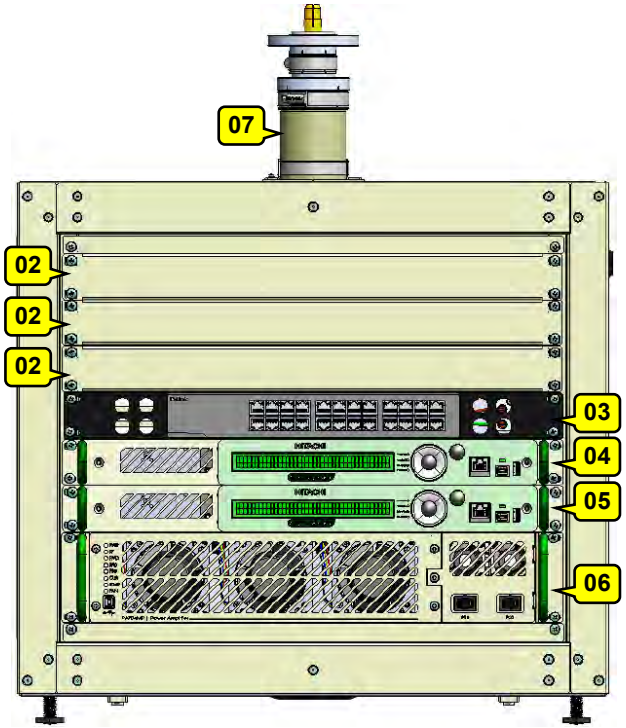

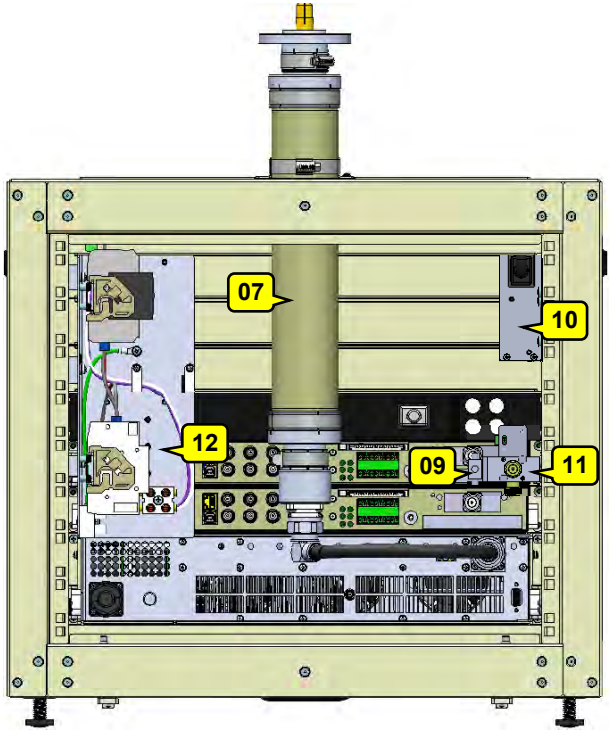

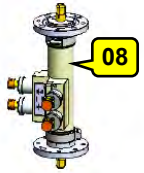

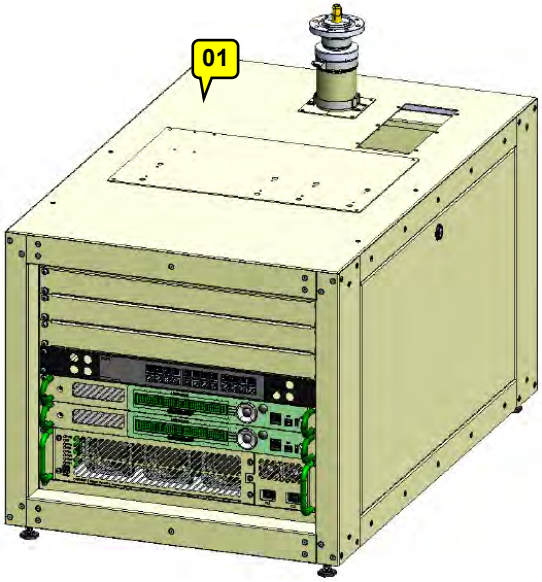

Construction EC702MP / EC704MP

DOUBLE EXCITER

REF	DESCRIPTION
01	Cabinet 8RU
02	1U slot void
03	Ethernet switch
04	Main CM8001 control module
06	PA702MP – Power amplifier (EC702MP) PA704MP – Power amplifier (EC704MP)
07	MOD 40243 - EIA 1-5/8” low pass filter
08	MOD 40215 – RF sample EIA 1+5/8”
12	AC mains protection unit

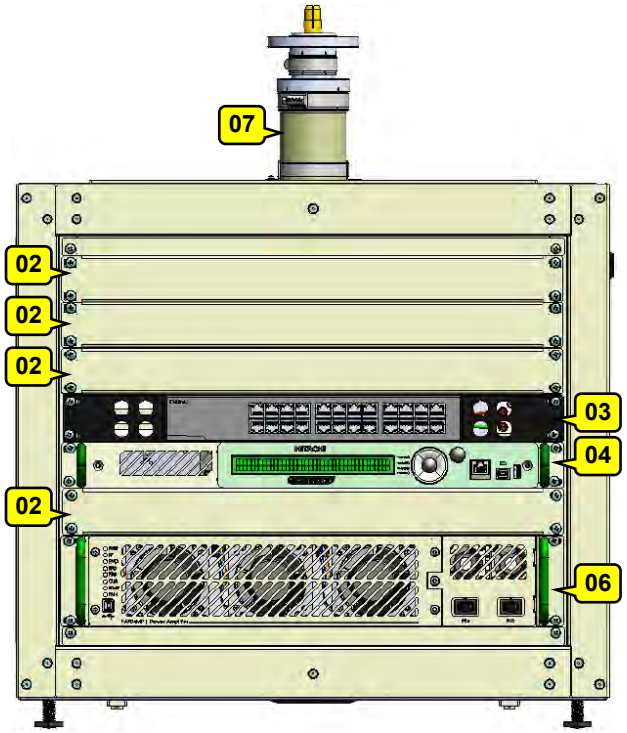

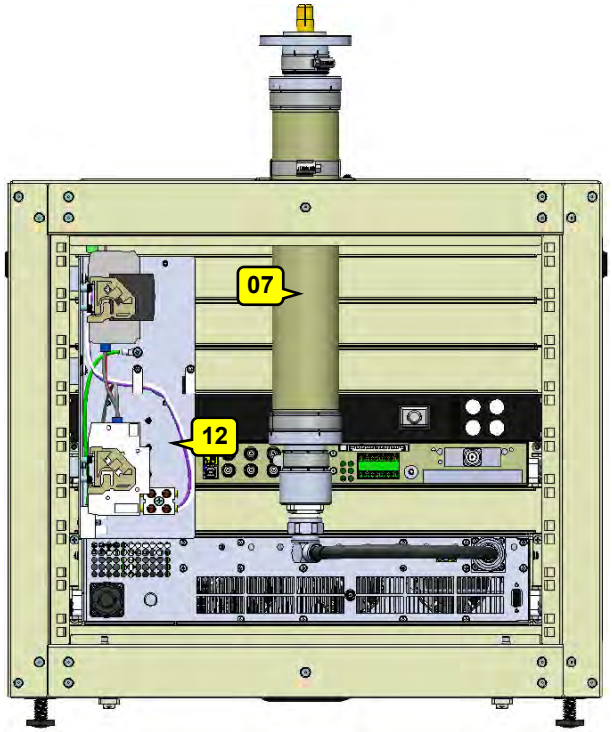

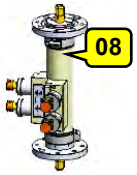

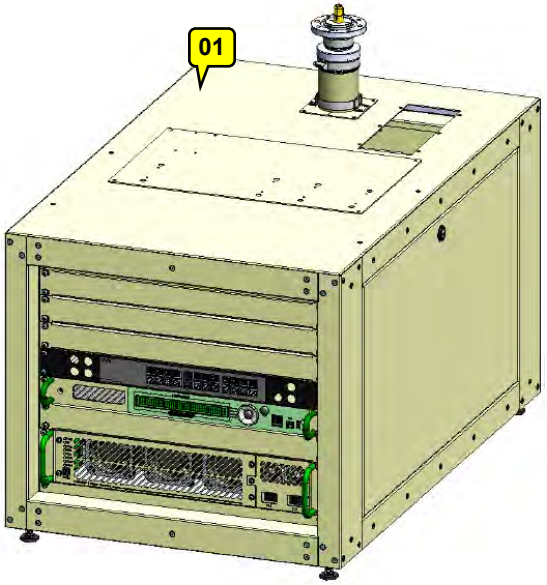

Construction EC702MP / EC704MP

SINGLE EXCITER

4. Footprint

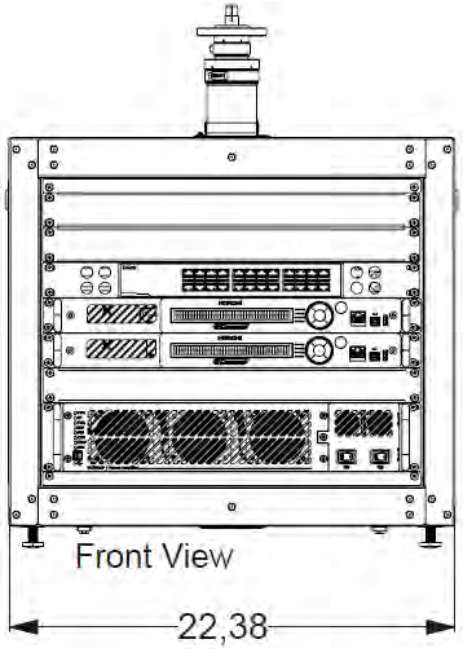

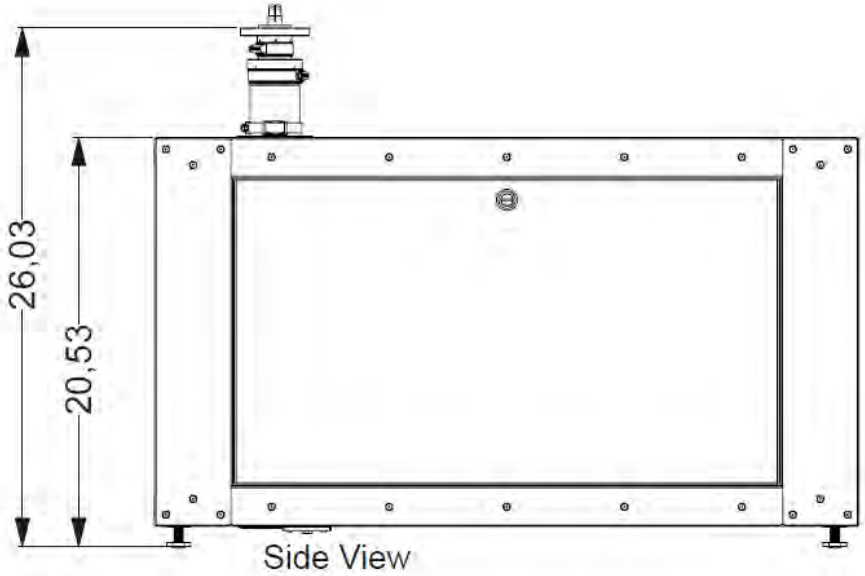

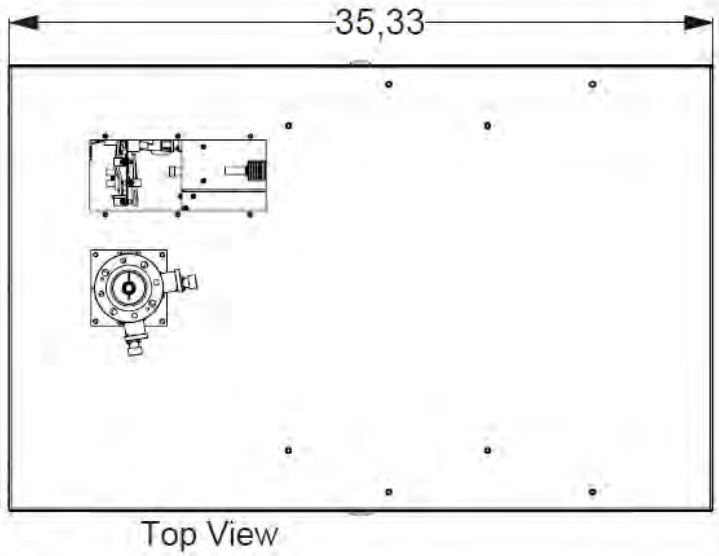

Dimmension (inches)

Footprint EC702MP / EC704MP
DOUBLE EXCITER SINGLE EXCITER

5. Block Diagram

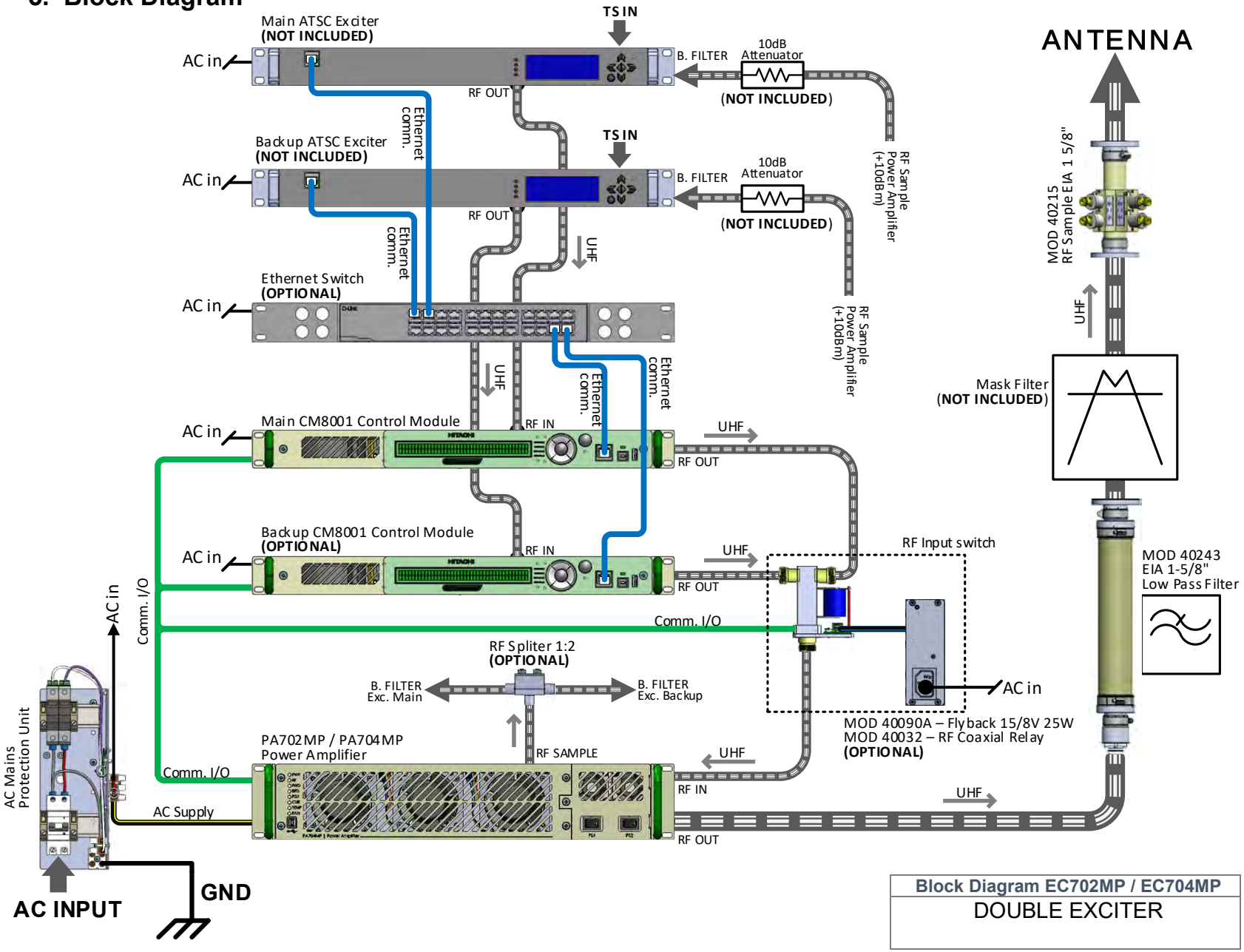

Block Diagram EC702MP / EC704MP

DOUBLE EXCITER

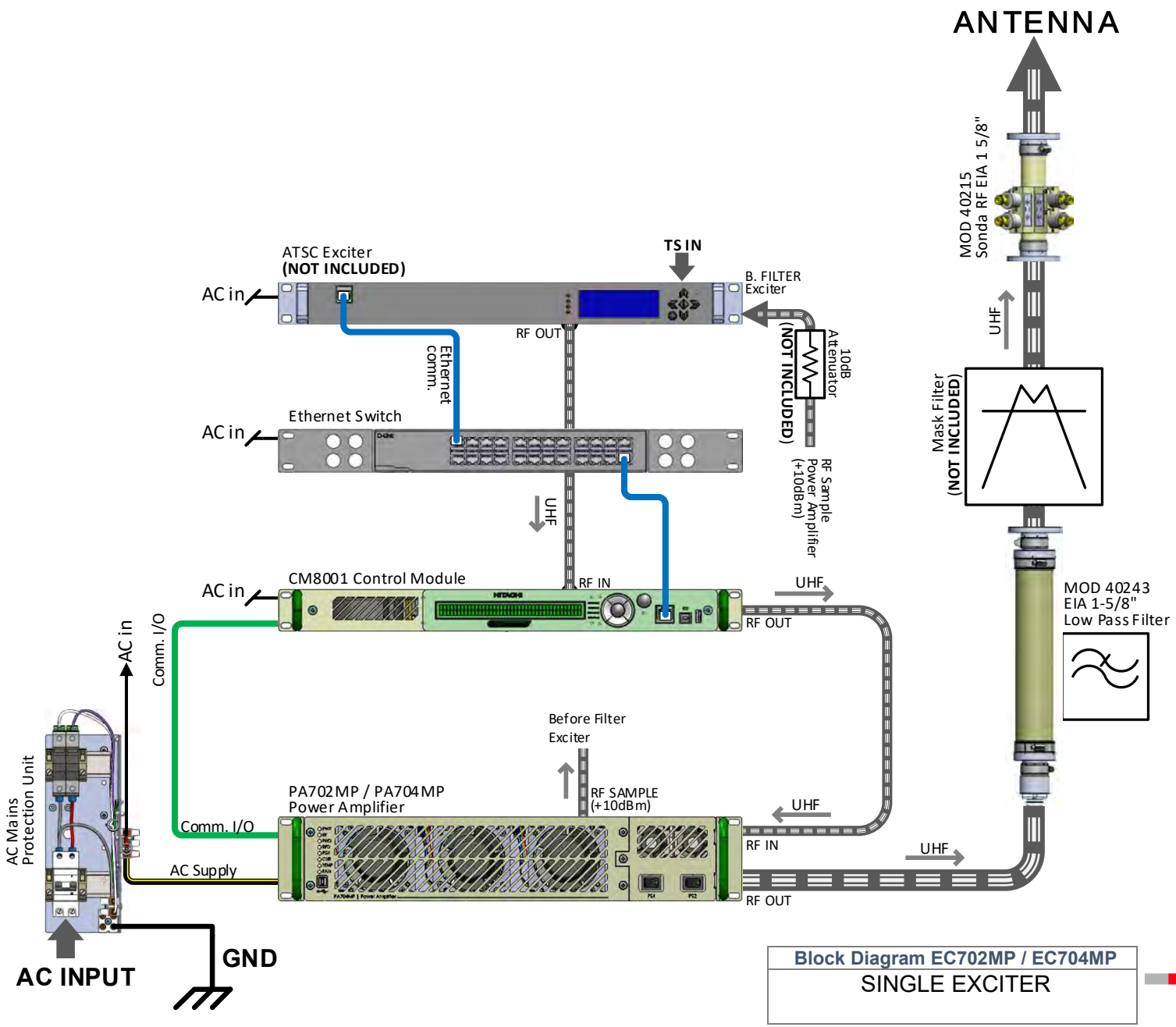

Block Diagram EC702MP / EC704MP

SINGLE EXCITER

6. Main Modules

6.1. CM8001 Control Module (MOD GV 40056)

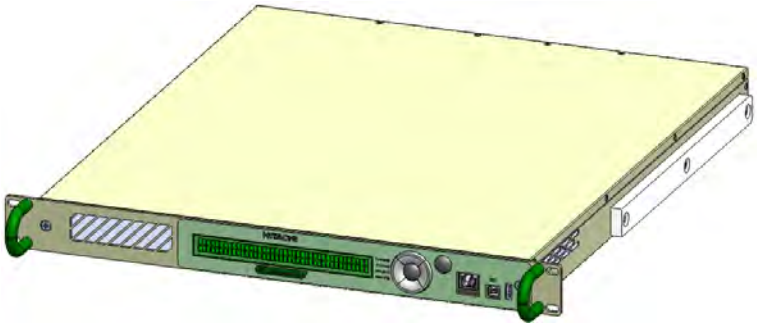

The E-Compact series of transmitters utilize a dedicated 1RU controller chassis, CM8001. The controller chassis has several functions including:
Access to exciter setup / monitoring

- AC mains power monitoring
- RF drive signal monitoring
- RF Exciter Level Control to RF Splitters
- RF power amplifier metrics
- RF output signal monitoring (FWD & RFL)
- Local user interface
- USB port for software diagnostics / updates
- External Web GUI status monitoring and control interface

The CM8001 controller gathers the status monitoring of all the transmitter subassemblies to provide to the operator transmitter status information, either locally or remotely. The controller provides transmitter telemetry including RF power monitoring. A user-friendly man/machine interface on the transmitter controller chassis includes:

- A front panel LCD screen provides transmitter status information.
- A front-panel control interface for menu driven commands (up/down/right/left navigation, escape, & OK buttons).
- LED status indicators

The CM8001 transmitter controller is paired with the TV exciter. For transmitter systems configured optionally with dual drive, the transmitter is equipped two / redundant controllers, one for each exciter eliminating single point failures for even higher system reliability.

6.1.1. RF Input

The CM8001 Control Module redistributes the RF signal received from the Exciter by controlling its level of distribution to the Power Amplifiers Drawers as a function of the transmitter's rated nominal power. For this, the CM8001 is set at the factory to receive an RF signal level of **0dBm, with minimum / maximum tolerances of -1dBm / + 1dBm**.

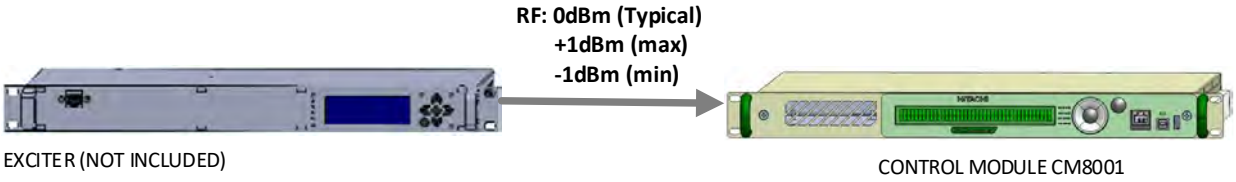

6.1.2. Interfaces

Front Panel

Rear Panel

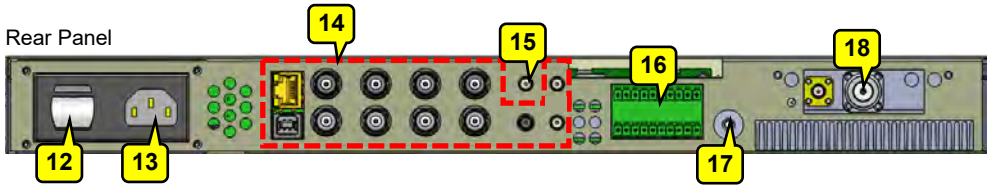

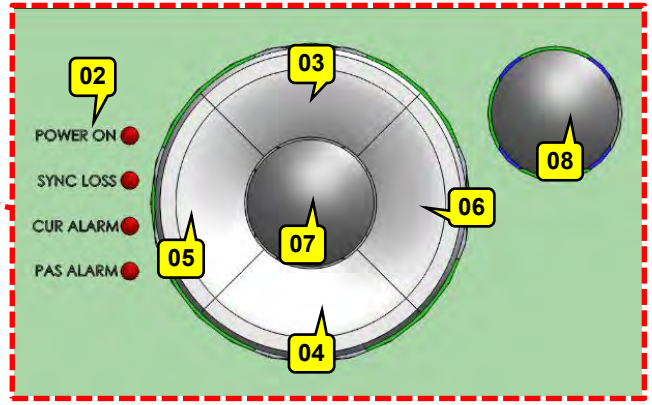

01	LCD Display (2 Lines x 40 Coluns)
02	Signaling LEDs
03	Up Key (▲)
04	Down Key (▼)
05	Left Key (◀)
06	Right Key (▶)
07	Enter Key (**Enter**)
08	Esc Key (**Esc**)
09	Ethernet Port

10	USB 2.0 Port Type B Jack
11	USB 2.0 Port Type A Jack
12	Power On Key
13	AC Input
14	NOT USED / NOT APPLY
15	“Tuner IN” – RF Input From Exciter
16	Interface Control I/O
17	Grounding
18	RF Output

6.1.3. Control System Functional Description

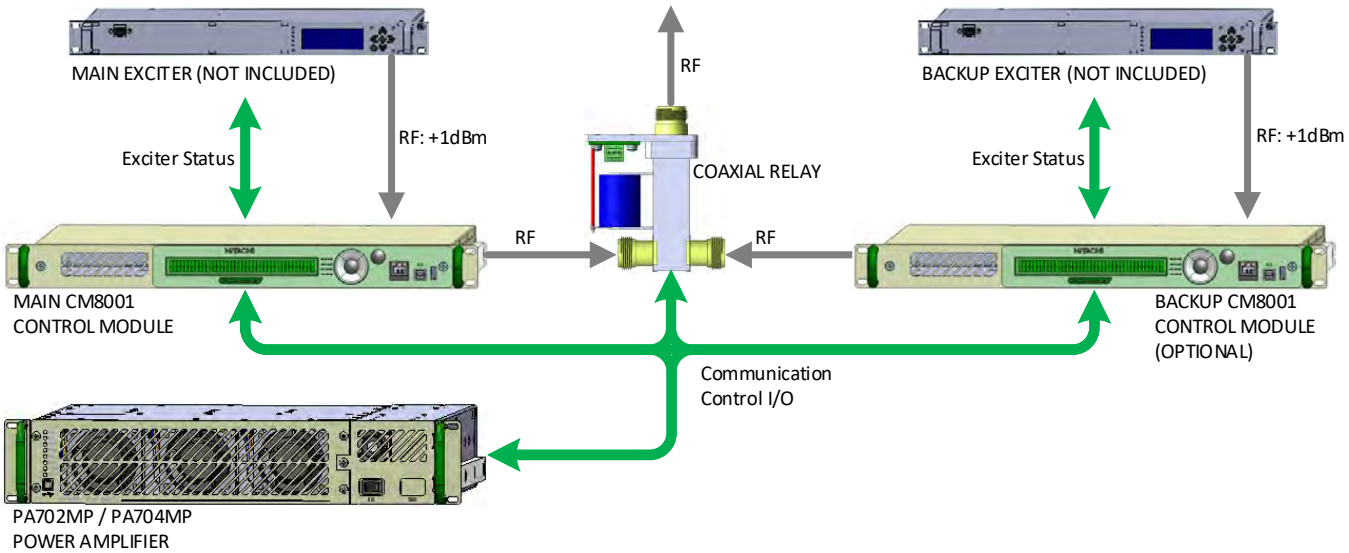

A1	+8Vcc from MCCB (**NOT USED TO MEDIUM POWER SERIES**)
A2	+15VCC - MCCB Source Monitor (**NOT USED TO MEDIUM POWER SERIES**)
A3	+50VCC - MCCB Source Monitor (**NOT USED TO MEDIUM POWER SERIES**)
A4	Forward Output Power Measure - Analog signal, from 0 to 4.5v
A5	Remote Control Data In
A6	Reflected Output Power Measure - Analog signal, from 0 to 4.5v
A7	Power Amplifier On/Off (5V means normal operation)
A8	RS-485A Communication
A9	GND
A10	RS-485B Communication
B1	Mask Filter Alarm Temperature (5Vcc)
B2	+8Vcc (Main Control Address) – 0Vcc (Backup Control Address)
B3	Control I/O
B4	AC Phase Alarm - 5V means normal operation
B5	Dummy Load Drawer Fan Alarm - 5V means normal operation
B6	Remote Control Data Out
B7	Exciter Status - Digital signal - 5V means normal operation
B8	Remote Control Clock
B9	Control I/O
B10	Coaxial Relay Control

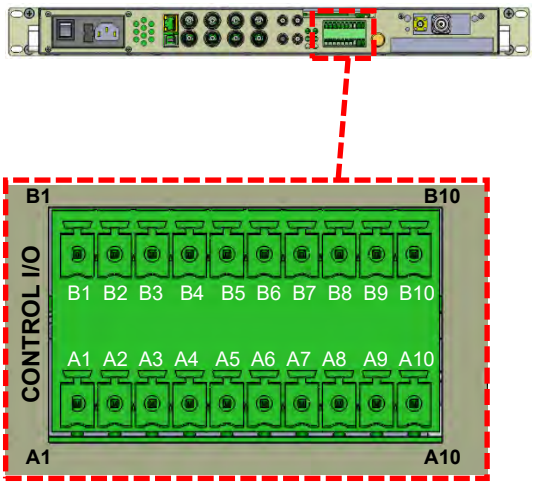

Control I/O Connector
MOD Control Rear Panel

6.1.4. Control System Operation

6.1.4.1. Navigation

The Control Module CM8001 has a system of configuration, measurements, alarms and remote management (TELESUPERVISION), that controls all the modules of the transmitter.

The configuration of the transmitter might be done either by its front panel, of the transmitter or the web interface using a browser of your choice or SNMP.

When the device is turned on, or when it enters in stand-by mode (idle for 5 minutes), the display switches between the following status screens:

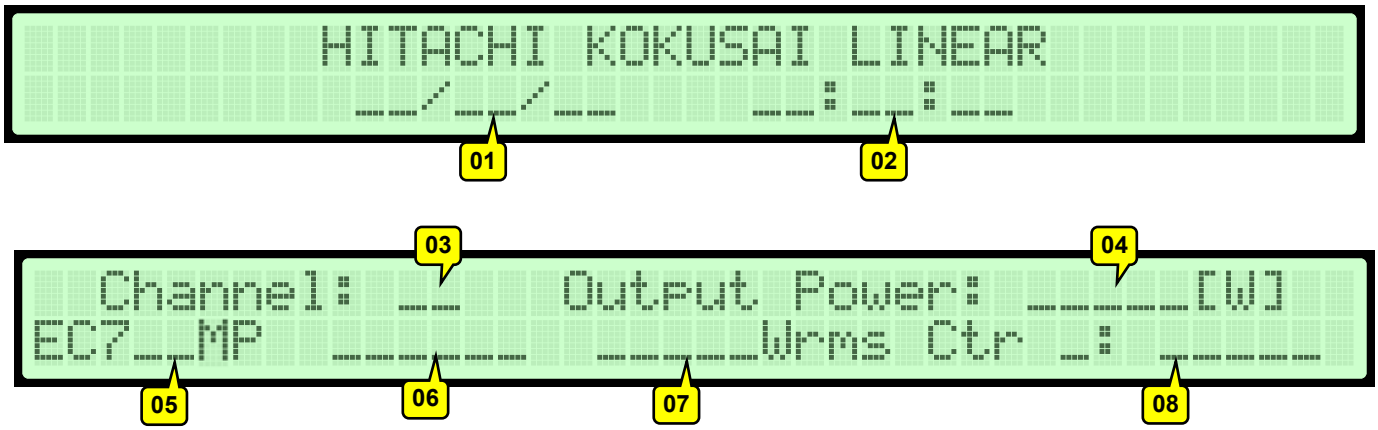

01	Current date
02	Current time
03	Operation UHF channel number
04	Real Output Power Value (Watts)
05	Equipment Model: EC702MP EC704MP

06	Transmission System: ATSC 1.0 ATSC 3.0
07	Power Equipment Model
08	Double Exciter Status CM8001 Main “Ctr A”: Active / Standby CM8001 Backup “Ctr B”: Active / Standby

When navigating through the different functions (status and setup), take into consideration the keyboard symbols and the descriptions below (*See 5.1.1 Interfaces*):

▲ Moves the arrow UP to the next function shown on LCD screen

▶ Moves the arrow to the next RIGHT position

▼ Moves the arrow DOWN to the next function shown on LCD screen.

◀ Moves the arrow to the next LEFT position.

ENTER - Confirms the chosen selection.
ESC - Cancel the selection and return to the previous screen.
When browsing the LCD screen, you will have access to status reading or settings changes. In order to orient yourself in this interface, attention should be paid to the menu structure as follows:

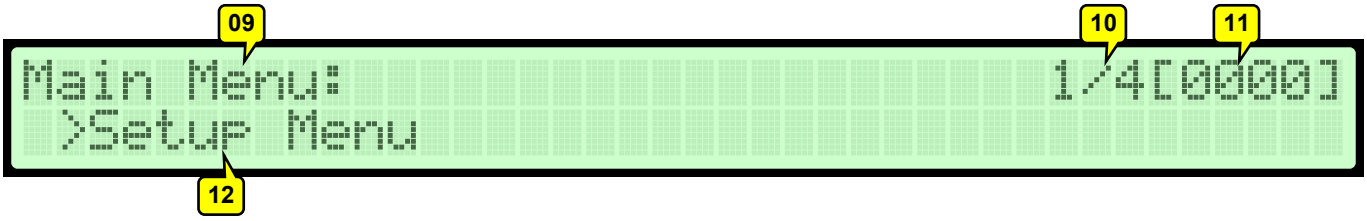

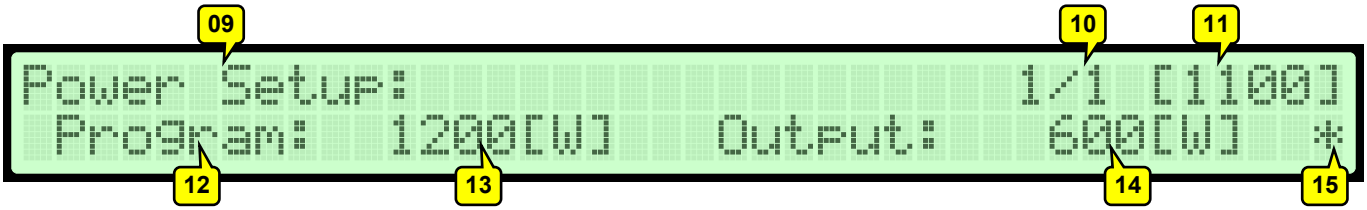

09	Parameter Menu or Parameter in the Screen.
10	Number of Parameter Menu or Parameter in the Screen / Total Number of Parameter or Menu.
11	4 digit numbers represents the screen position on the command menu

12	Current Menu or Current Parameter
13	Changing Parameter Value
14	Current Parameter Value
15	When show “ * “ indicates that the changes is not yet active. For this It’ s necessary to press “ENTER” key

For change any parameter, used ◀ for decrease or ▶ to increase.

6.1.4.2. System Structure

The system consists of the Root Menu "Main Menu" that gives access to four categories of Menu:

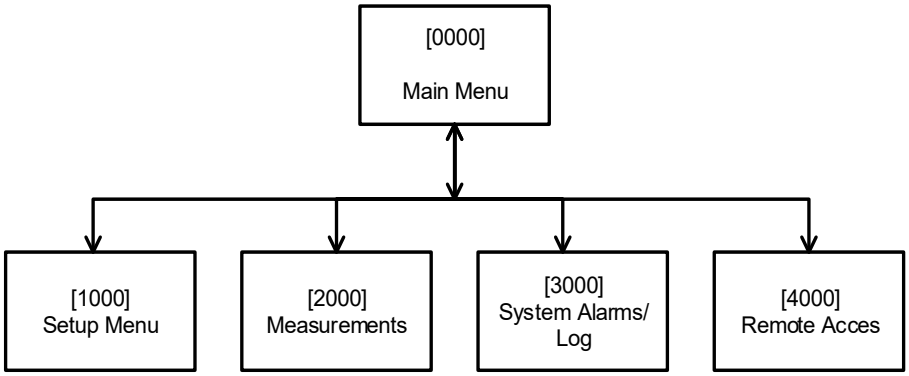

⇨ Main Menu ⇨Setup Menu: Access to configure the equipment parameters.
⇨ Main Menu ⇨Measurements: Access to consult the parameters of the equipment.
⇨ Main Menu ⇨System Alarms/Log Alarms: Access to query alerts and history of Alarms.
⇨ Main Menu ⇨Remote Access: Access to configure the equipment to operate on ethernet network.

[1000] - Main Menu ⇨ Setup Menu

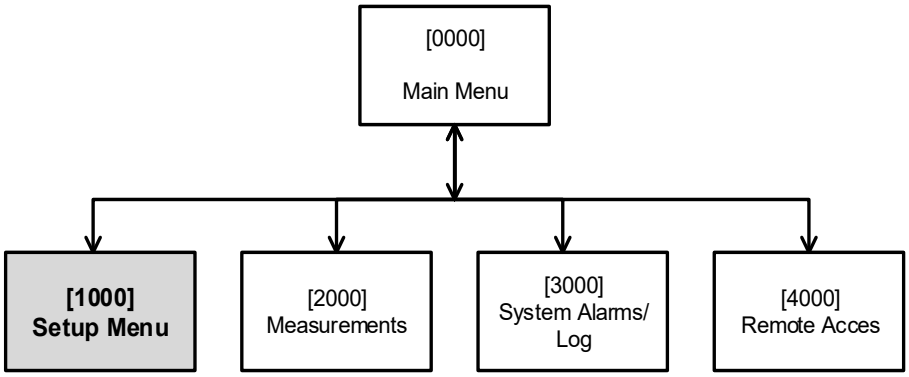

The "Setup Menu" allows access to alter machine's parameter setting functions.

The Transmitter is delivered to the customer with the parameters that were provided at the time of purchase, so it is not necessary to change the settings of the Equipment.

#	Parameter	Position	#	Description / Functionality
1/9	Power Setup	1100	1/1	Changes the output power of the Equipment.
2/9	Transmitter Setup	1200	1/2	Automatic Level Control: On/Off
			2/2	Ctr Mode: Active / Standby
3/9	Time and Date Setup	1300	1/1	Change the date, time and date format (dd/mm/yy or mm/dd/yy)
4/9	Password Setup	1400	1/2	Enable / Choose new password
			2/2	Disable Password
5/9	Alarms Mask	1500	1/1	Reflected Power – Set de Alarm Mask for Reflected Power
6/9	USB Host Access	1600	1/1	System Upgrade – Used to system upgrade via USB card.
7/9	Transistor Bias Adjustment	1700	1/4	LDMOS Drain Voltage - The values are pre-set at the factory.
			2/4	Carrier Amp. Current - The values are pre-set at the factory.
			3/4	Peak Amp. Gate Voltage - The values are pre-set at the factory.
			4/4	Status: show the status exciter: (Active / Standby)
8/9	PA Temperature Control	1800	1/1	Allows to set the operating temperature of the Powers Amplifiers.
9/9	Control Mode	1900	1/1	Enable control module acess remote

[2000] - Main Menu ⇨ Measurements

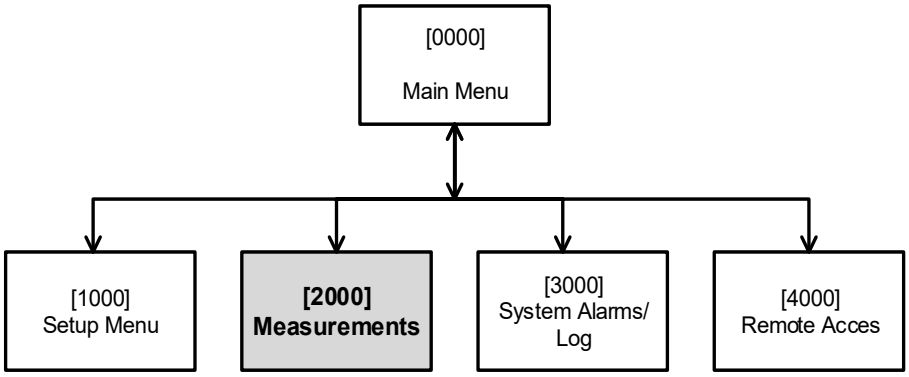

The "Measurements" menu allows access to read the operating parameters of the equipment (read only).

#	Parameter	Position	#	Description / Functionality
1/7	Power	2100	1/3	Programmed: Show the Programmed power measurement.
			2/3	Forward: Show the value of Forward Output Power (Watts). Reflected: Show the value of Reflected Output Power (Watts).
			3/3	ALC Reference Voltage: Show the value (Volts).
2/7	Exciter Status	-	-	Active / Fail
3/7	Drawers	2300	1/3	Drawers Measurements

The [2300] Drawers Measurements parameter allows to view the main status of all Power Amplifiers Drawers:

DRAWERS IDENTIFICATIONS

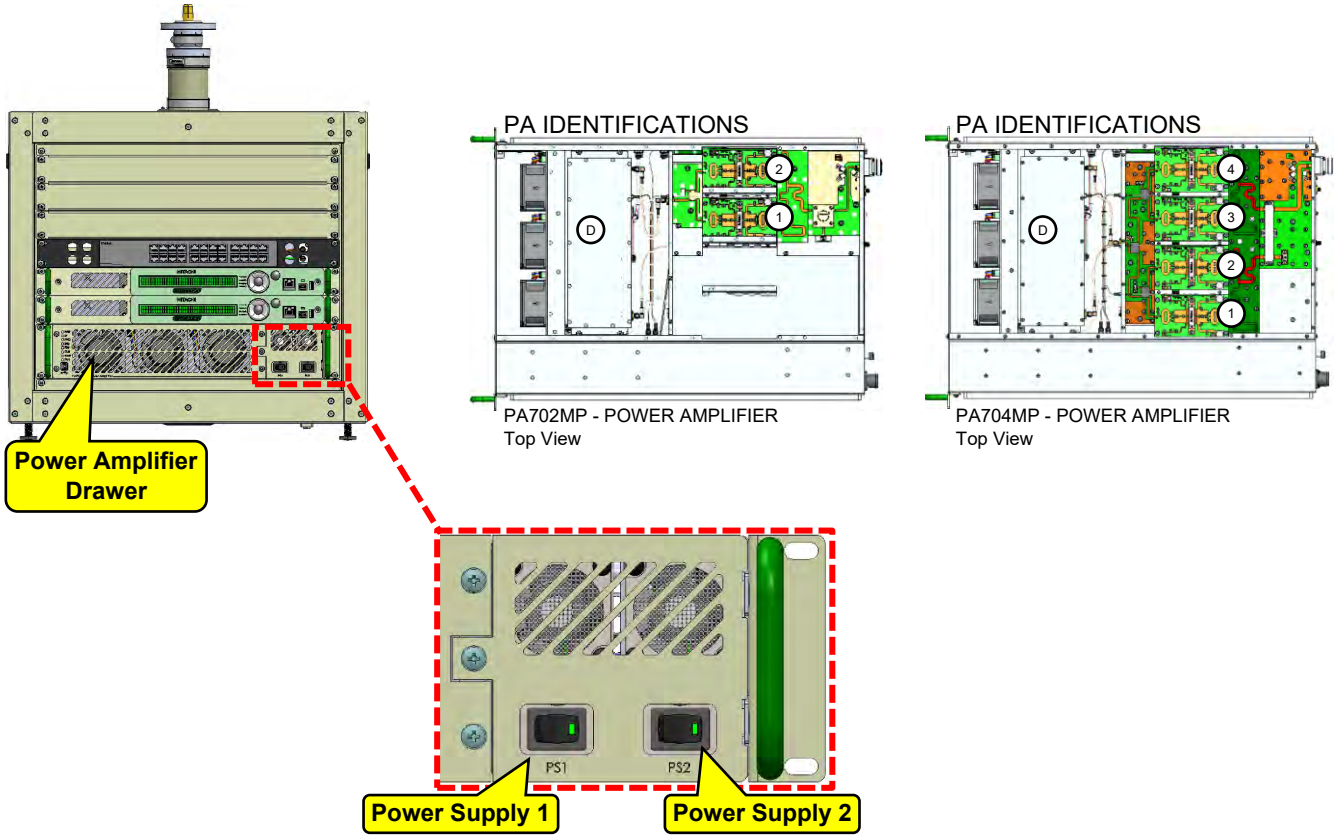

1/3 Power Supply: Voltage measure of all Power Amplifier Drawers Sources

Position	#	Description / Functionality
2310	1/3	Power Supply 1: [V]
	2/3	Power Supply 2: [V]
	3/3	Driver Power Supply: [V]

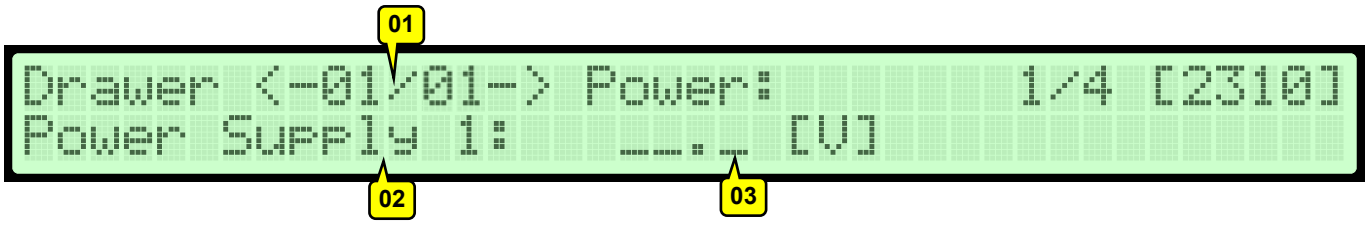

01	(◀ or ▶) Selects the Power Amplifier Drawer: EC70xMP: 1 Power Amplifier Drawer.
02	(▲ or ▼) Selects the Power Supply: Main Power Supply 1/2 Driver Power Supply 2/2
03	Measured value (Volts) in each Power Supply

2/3 Current: Current measure (Amper) in all Power Amplifier Drawers Transistors and Drive (Eight Power Transistors and one Drive per Power Amplifier Drawer):

Position	#	Description / Functionality
2320	1/3	I1: [A] I2: [A] - Transistor 1 and Transistor 2 Current
	2/3	I3: [A] I4: [A] - Transistor 3 and Transistor 4 Current
	3/3	ID: [A] - Driver Current

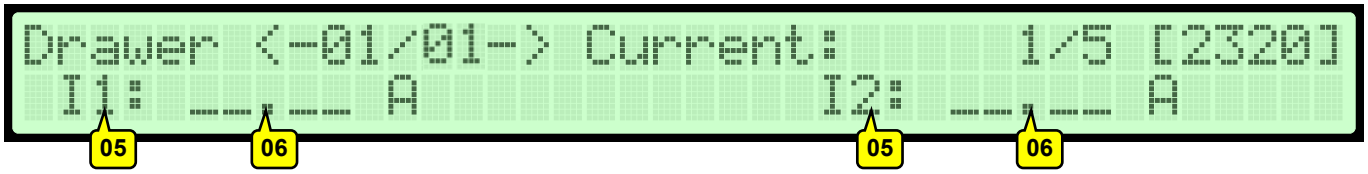

05	(▲ or ▼) Selects the Power Transistors or Driver of each Power Amplifier Drawer
06	Measured value (Amper) in each Power Transistor

3/3 Temperature: Temperature measure (°F or ºC) in all Power Amplifier Drawers Transistors and Drive (Eight Power Transistors and one Drive per Power Amplifier Drawer):

Position	#	Description / Functionality
2330	1/3	T1: [ºC or ºF] T2: [ºC or ºF] - Transistor 1 / Transistor 2
	2/3	T3: [ºC or ºF] T4: [ºC or ºF] - Transistor 3 / Transistor 4
	3/3	TD: [ºC or ºF] TAir: [ºC or ºF] - Drive Temperature / air Temperature

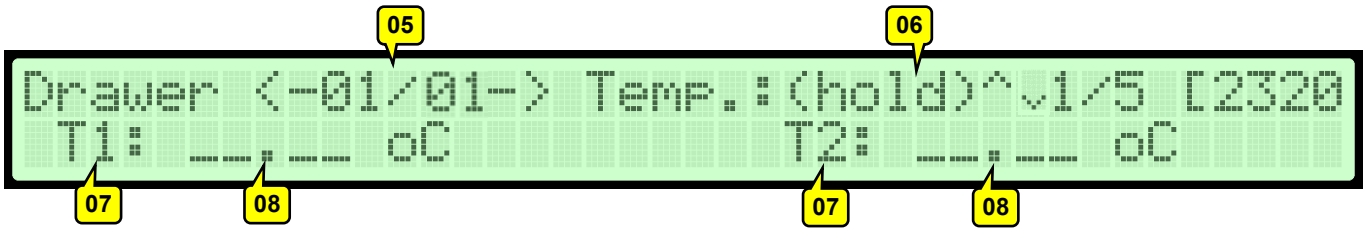

05	(◀ or ▶) Selects the Power Amplifier Drawer: EC70xMP: 1 Power Amplifier Drawer.
06	Hold ▲ or ▼ to change between ºC and ºF
07	(▲ or ▼) Selects the Power Transistors or Driver of each Power Amplifier Drawer
08	Measured value (°C or °F) in each Power Transistor

#	Parameter	Position	#	Description / Functionality
4/7	Control Module Power Supply	2400	1/2	+3,3V : OK - Check de +3,3Vcc Ctrl Module Power Supply +15V : OK - Check de +15Vcc Ctrl Module Power Supply
			2/2	+5V : OK - Check de +5Vcc Ctrl Module Power Supply +28V : OK - Check de +28Vcc Ctrl Module Power Supply
5/7	Communication Status	2500	1/3	Drawers Communication Status (OK / Fail / -- “not present”) P01 / P02 / P03 / P04 – Power Drawer 1 / 2 / 3 / 4
			2/3	Drawers Communication Status (OK / Fail / -- “not present”) P05 / P06 / P07 / P08 – Power Drawer 5 / 6 / 7 / 8
			3/3	Control Module Communication Status (OK / Fail / -- “not present”)
6/7	Software/Hardware Version	2600	1/4	Control: Control Module Version
			2/4	Drawers Version. (◀ or ▶) Selects the Power Drawer
			3/4	Digi: Ethernet Module Version
			4/4	CIP Version / CIM Version
7/7	Eqp. Power Supply	2700	1/1	Eqp. Power Supply Measurements (OK / Fail) 15V / 8V 50V

[3000] - Main Menu ⇨ System Alarms/Log

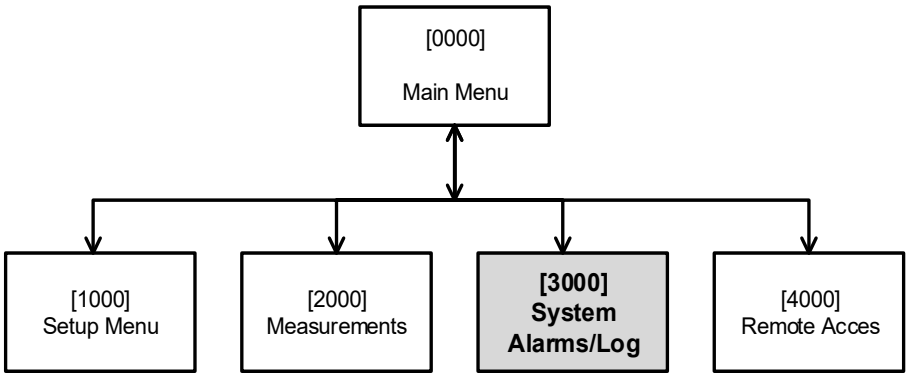

This menu provides information on current and past alarms for preventive/corrective maintenance purposes.

Before detailing access to the Sub-menus of this item, it is important to know what the alarms are and their possible solutions..

There are two alarm lists; "Equipment Alarms", which refers to faults in the equipment as a whole and "Drawers Alarms", which refers to faults in power amplifier drawers and thus impact the transmitter’s operation reflected in the operation of the equipment.

EQUIPMENT ALARMS

ALARM	DESCRIPTION
+15V Control Module Failure	Indicates failure in any of the Control Module Sources (+15V, +3,3V, +28V +5V). The sources that are inside the Control Module.
+3.3V Control Module Failure	
+28V Control Module Failure	
+5V Control Module Failure	
+15V Equipment Failure	Indicates failure in any of the Equipment Sources (+15V, +50V, +8V). The sources that are at the rack bottom.
+50V Equipment Failure	
+8V Equipment Failure	

ALARM	ALARM DESCRIPTION
AC Failure	
Drawer Comm. Failure	There is no communication between the power drawers. Check the RS485 cable connections in the rear panel of the excitation drawer and power drawers. Check the internal interconnections of connectors. Get in contact with Hitachi Kokusai Linear's technical support service. Check the power drawers for proper operation using the HyperTerminal.
Drawers Alarms	Failure in any of the Power Drawers.
Equipment Info Error	Indicates lack of information for the selected ID. and thus impact the transmitter's operation 1PPS or 10MHz reference OR Wrong EQP ID.
Exciter Failure	Indicates transmitter exciter failure and prompts excitation exchange between Main and Backup (if was available).
Other Control Module Failure	Indicates failure in the communication between Control Modules A and B (if was available).

Output High Power	The Output Power Transmitter outstripped 10% of the maximum power limit.
Output Power Zero	The Transmitter has the programmed power, but without power reading at the output.
Power Amp. OFF	Indicates that the ON/OFF switch in the front panel is off.
Reduced Power	The Transmitter is not operating at rated power. May occur due to power loss in one or more Power Amplifier Drawers.
Reflected Power	Indicates presence of reflected power at the transmitter's output at the output of transmitter. Check the current alarm list to list other possible alarms that could help better assess the situation of the equipment as a whole. Check the connections of the equipment to filter and filter the antenna. Get in contact with Hitachi Kokusai Linear's technical support service.
Remote Ctrl Failure	Indicates communication failure in the Remote Control Drawer.

ALARM	ALARM DESCRIPTION
Remote Mute	Indicates that the equipment output power was remotely reduced to zero. No measure needs to be taken, as this alarm is intentionally caused by the system operator.
RF Load FAN Failure	Occurs when the Dummy Load Module Drawer fan fails and the internal temperature exceeds 90 °C
Too Few Drawers	Indicates that the Transmitter does not have the minimum number of Drawers to operate under reduced power condition.

POWER AMPLIFIERS DRAWERS ALARMS

This list is directly related to the alarms that occur in the Power Drawers. When there is an alarm LED lit (see item 5.2.6 - Signaling Leds - Power Amplifier Module) the alarm detail is displayed when accessing the "System Alarms / Log" of the Control Module CM8001. Alarms can be a **Notification** (irregular operation that generates no fault containment action) or a **Critical** alarm (Shutdown the device or reduces its operational capability)

Usually when the alarm occurs, it is indicated in which device it happened:

```
Current Alarms:                    1/1 [3100]
  ->PA1 Hight Current
```

Device Identification

Alarm

Devices Identification:

DRAWERS IDENTIFICATIONS

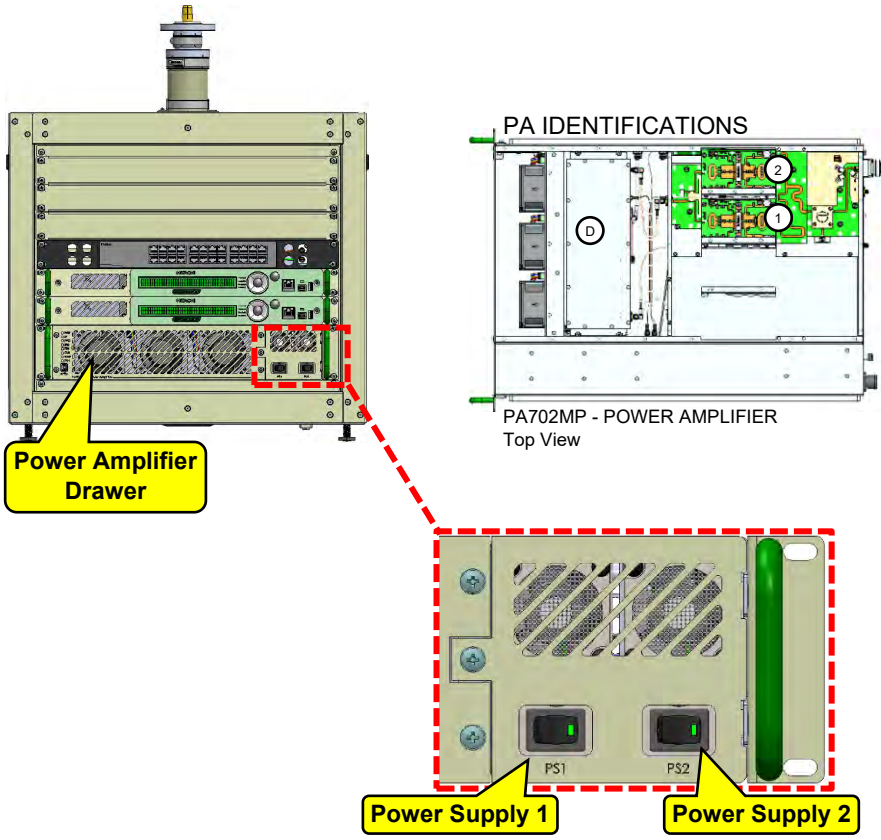

PA IDENTIFICATIONS

PA702MP - POWER AMPLIFIER
Top View

PA IDENTIFICATIONS

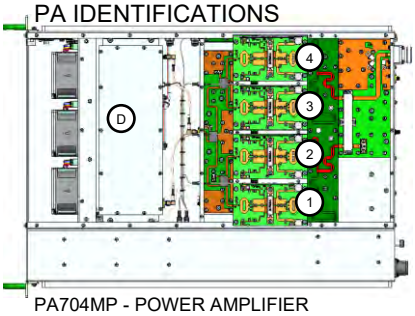

PA704MP - POWER AMPLIFIER
Top View

"D" – Driver / Pré Driver

Alarms List:

ALARM	ALARM DESCRIPTION
Critical High Forward Power	Power Amplifier Drawer forward output power is greater than 1300Watts. Default system action: **Shutdown**.
Critical High Reflected Power	Drawer reflected output power is greater than 184Watts. Default system action: **Shutdown**.
Critical High Input Air Temperature	Ambient air temperature used in the reflow of the equipment is greater than 48°C (118,4ºF). Default system action: **Shutdown**.
High Input Air Temperature	Ambient air temperature used in the reflow of the equipment is greater than 35°C (95ºF). Default system action: **Notification.**
Low RF Input Level	RF Input Level is less than -8dBm Default system action: **Notification.**
High RF Input Level	RF Input Level is greater than 10dBm Default system action: **Notification.**
PA__ High Current	Current at the indicated PA is greater than 10A. Default system action: **Notification.**
PA__ Critical High Current	Current at the indicated PA is greater than 10A. Default system action: **Shutdown**.
PA__ Low Current	Current at the indicated PA is less than 0.2A. Default system action: **Shutdown**.
PA__ Unbalance Current	Current in the indicated PA is 2.5A is higher or lower than the others. Default system action: **Notification.**
PA__ High Temperature	Temperature at the indicated PA is greater than 75ºC (167ºF). Default system action: **Notification.**
PA__ Critical High Temperature	Temperature at the indicated PA is greater than 80ºC (176ºF). Default system action: **Shutdown**.
PA__ Low Gain	Indicated PA Gain is Less than 49dB. Default system action: **Notification**

ALARM	ALARM DESCRIPTION
PA__ Failure	VGS (Voltage Gate Source) of the indicated PA is less than 2/3 of the programmed VGS. Default system action: **Shutdown**.
PA__ Comm Failure	No communication with the indicated PA.
Driver Low Gain	Gain in the driver is less than 30dB. Default system action: **Notification**
Driver Low Voltage	Voltage in the driver is less than 5.0V of programmed. Default system action: **Notification**
Driver Critical High Current	Consumption current in the driver is greater than 4.9A. Default system action: **Shutdown**.
Driver High Current	Consumption current in the driver is between 4.5A and 4.9A. Default system action: **Notification**
Driver Low Current	Consumption current in the driver is less than 0.4A. Default system action: **Notification**
Driver High Temperature	Temperature Driver is greater than 75°C (167ºF). Default system action: **Notification**
Driver High Output Power	Output Power Driver is greater than 46dBm. Default system action: **Notification**
Driver Comm Failure	No communication with the Driver.
Pre-Driver Low Current	Consumption current in the pre-driver is less than 0.1A. Default system action: **Notification**
Pre-Driver High Current	Consumption current in the pre-driver is greater than 0.35A. Default system action: **Notification**
PSU __ High AC Line Voltage	AC Voltage at PSU is greater than 240Vac Default system action: **Notification**
PSU __ Critical High AC Line Voltage	AC Voltage at PSU is greater than 250Vac Default system action: **Shutdown**

ALARM	ALARM DESCRIPTION
PSU __ Critical Low AC Line Voltage	AC Voltage at PSU is less than 170Vac Default system action: **Shutdown**
PSU __ Critical High Current	Power at PSU indicate exceeds 1300Watts Default system action: **Shutdown**
PSU __ High Temperature	Temperature at PSU is greater than 60°C (140ºF). Default system action: **Notification**
PSU __ Critical High Temperature	Temperature at PSU is greater than 63°C (145.4ºF). Default system action: **Shutdown**
PSU __ High Current	Current at PSU is greater than 24A. Default system action: **Notification**
PSU __ Low Voltage	DC Output Voltage at PSU is less than 3V of the programmed. Default system action: **Shutdown**
PSU __ High Voltage	DC Output Voltage at PSU is greater than 3V of the programmed. Default system action: **Shutdown**
PSU __ Low AC Line Voltage	AC Voltage at PSU is less than 180Vac Default system action: **Notification**
PSU __ Shutdown	The PSU is Shutdown.
FAN __ Warning	Fan rotation reaches ±1000RPM in relation to software programmed value. Default system action: **Notification**
FAN __ Failure	Fan rotation reaches ±2000RPM in relation to software programmed value. Default system action: **Notification**

BROWSER ALARMS STATUS

#	Parameter	Position	#	Description / Functionality
1/4	Current Alarms	3100	---	Show the list of currents Alarms in the Equipment.

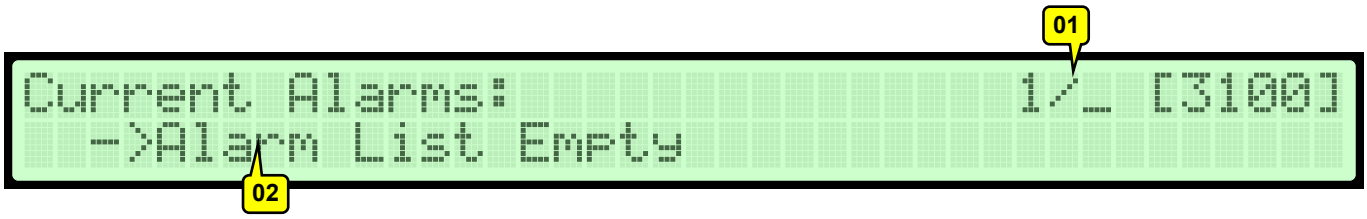

01	Number of Alarm of Total Alarms
02	▲ or ▼ to view the Alarms List

When there is no alarm, it will display: “Alarm List Empy”

#	Parameter	Position	#	Description / Functionality
2/4	Alarm Log	3200	---	Show the list of past Alarms in the Equipment.

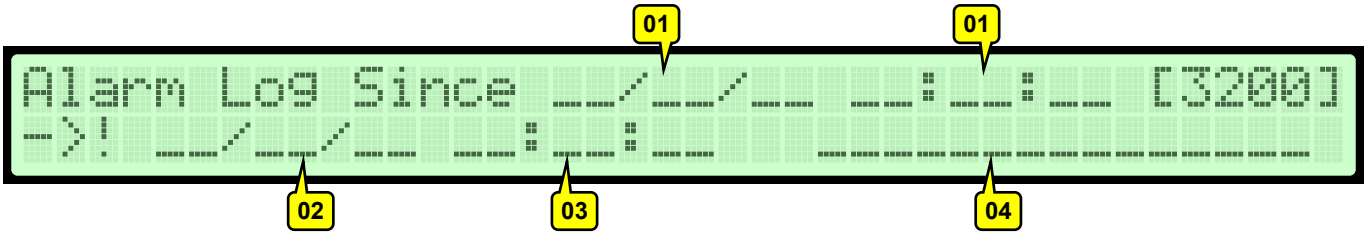

01	Date and time the first alarm occurred
02	Date of the alarm occurred
03	Time of the alarm occurred
04	Alarm List

Press ▲ or ▼ to browse in the Alarm List.

#	Parameter	Position	#	Description / Functionality
3/4	Drawers Alarms	3300	1/2	Current Drawers Alarms [3310]
			2/2	Past Drawers Alarms [3320]

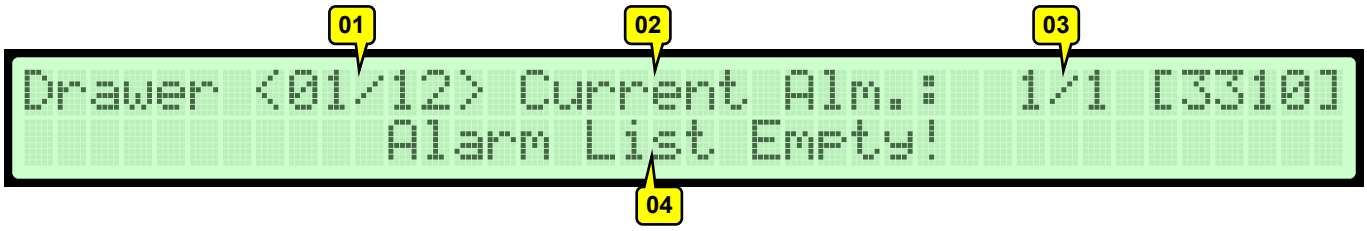

01	Indicates which Drawer/Module indication
02	Indicates “Current Alarms [3310] or “past Alarms [3320]
03	Number of Alarm of Total Alarms
04	Alarm List

Press ▲ or ▼ to browse in the Alarm List.

#	Parameter	Position	#	Description / Functionality
4/4	Clear Alarm Log	---	---	Show the list of past Alarms

Select this option to clear all alarm logs.

[4000] - Main Menu ⇨ Remote Access

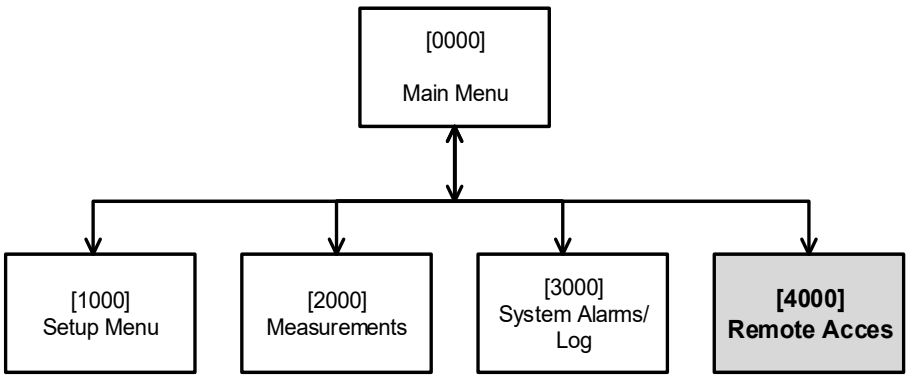

This menu allows the configuration of the Ethernet network parameters so that you have remote access via a network connection.
All equipment parameters such as transmit power, source measurements, alarms check and all possible functional selections can be accessed remotely through a PC Browser or any Smartphone Browser by connecting to the embedded WEB page server of the Equipment.

#	Parameter	Position	#	Description / Functionality
1/3	IP Address	---	---	Set the IP Address
2/3	Subnetwork Mask	---	---	Set the Subnetwork Mask
3/3	Gateway	---	---	Set the gateway

6.1.5. Frontal Led Alarms

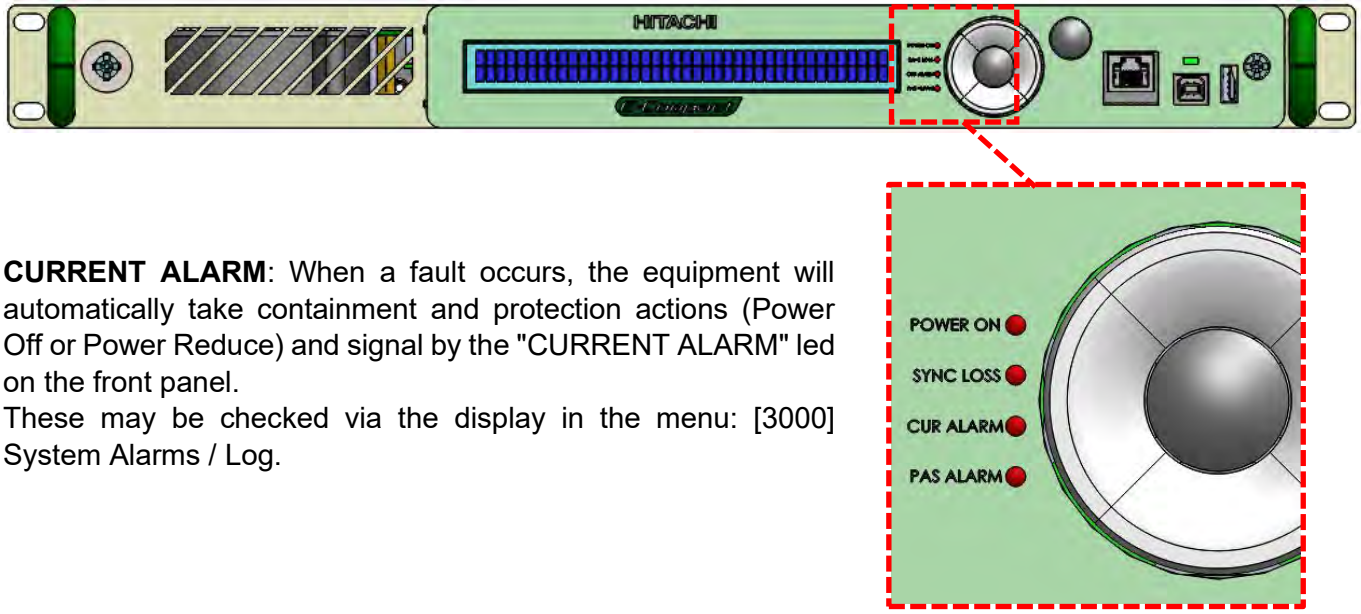

CURRENT ALARM: When a fault occurs, the equipment will automatically take containment and protection actions (Power Off or Power Reduce) and signal by the "CURRENT ALARM" led on the front panel.
These may be checked via the display in the menu: [3000] System Alarms / Log.

PAST ALARM: When signaling, indicates that there have been malfunctions in the past. These alarms may be checked via the display in the menu: [3000] System Alarms / Log.

6.2. PA704MP / PA702MP Power Amplifier Module

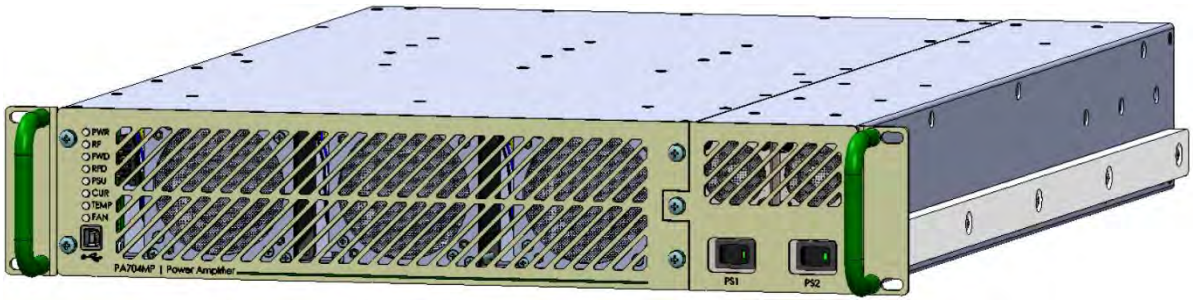

This is an air-cooled UHF power amplifier drawer composed of an RF block with until four power transistors that utilize Doherty's high efficiency technology. Each Drawer can provide up to 450 Watts RMS (ATSC 1.0) or up to 400 Watts RMS (ATSC 3.0) with efficiency between 34% and 41% depending on the operating channel.

The Power Drawers are mounted in the 2U rack and avaliable em two models:

PA702MP Power Amplifier (MOD GV 40033A) – 215 Watts @ATSC3.0 / 225 Watts @ATSC1.0
PA704MP Power Amplifier (MOD GV 40010) – 400 Watts @ATSC3.0 / 450 Watts @ATSC1.0

Main features:

- ⇨ High efficiency.
- ⇨ Power Supply redundancy – avaliable on PA702MP model.
- ⇨ Doherty Configuration.
- ⇨ Standing fans accessible from the front panel.
- ⇨ Removable power supply at the front panel of the drawer.
- ⇨ 2U Power Drawer for 19" rack.
- ⇨ Power transistors LDMOS Ampleon BLF-888A.
- ⇨ Automatic control of the quiescent currents of the power transistors depending on the temperature.
- ⇨ Automatic fan speed control according to power transistor’s temperature.
- ⇨ Protection against VSWR and Overdrive
- ⇨ Power Factor Corrector (PFC) at power supply (PFC).
- ⇨ Protection against over current in the power supply.
- ⇨ Settings and measures via terminal.
- ⇨ Automatic restart after alarm event.
- ⇨ Matched sample of the output signal.
- ⇨ Integrated MOD bus Control.

Never unplug any Power Amplifier Drawer while the Transmitter is on. Risk of equipment damage.

6.2.1. Interfaces

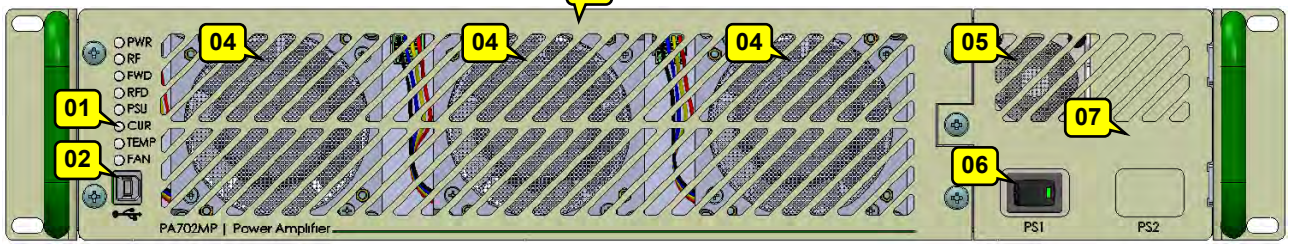

Front Panel – PA702MP

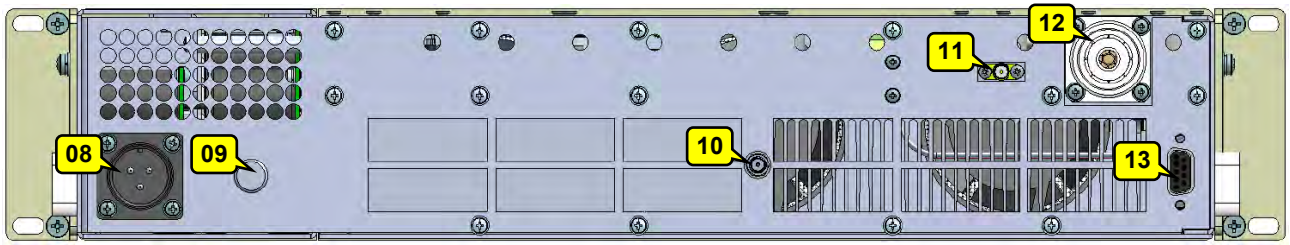

Rear Panel – PA702MP

REF	DESCRIPTION
01	Signaling LEDs
02	USB Interface
03	Removable front panel
04	Fan Air Filter
05	Power Source 1 (PS1)
06	On/Off Power Source 1 (PS1)
07	Slot for Redundant Power Source (Only PA702MP)
08	AC Power input
09	GND connector
10	RF INPUT – SMA female 50Ω
11	RF SAMPLE – SMA female 50Ω
12	RF OUTPUT – DIN 7/16” female 50Ω
13	COMM – DB9 communication

PA702MP

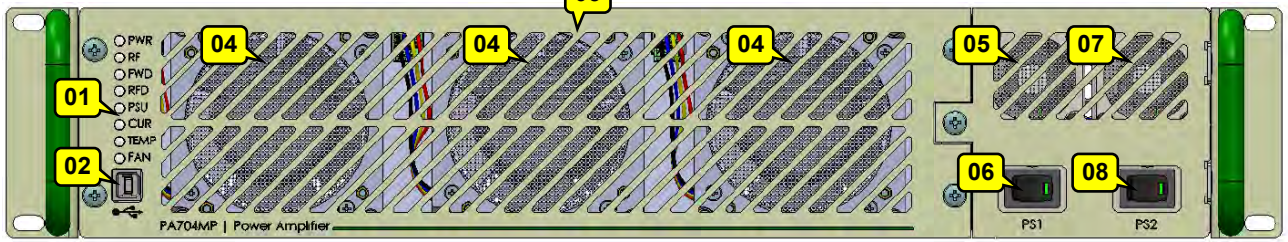

Front Panel – PA704MP

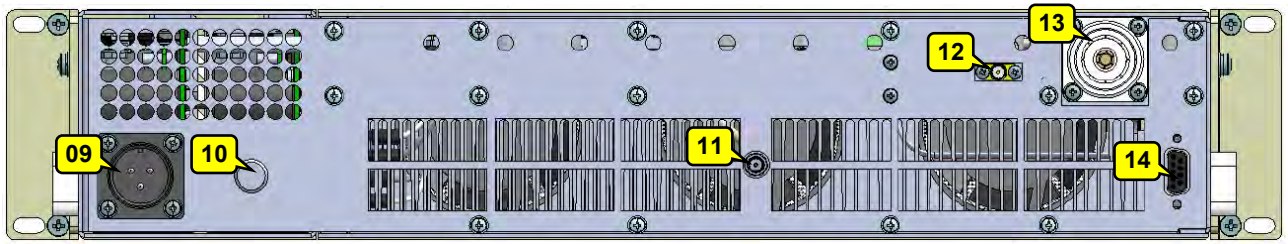

Rear Panel – PA704MP

REF	DESCRIPTION
01	Signaling LEDs
02	USB Interface
03	Removable front panel
04	Fan Air Filter
05	Power Source 1 (PS1)
06	On/Off Power Source 1 (PS1)
07	Power Source 2 (PS2)
08	On/Off Power Source 2 (PS2)
09	AC Power input
10	GND connector
11	RF INPUT – SMA female 50Ω
12	RF SAMPLE – SMA female 50Ω
13	RF OUTPUT – DIN 7/16” female 50Ω
14	COMM – DB9 communication

PA704MP

6.2.2. Specifications

	Characteristic	Specification	
		PA702MP	**PA704MP**
Input	Frequency Range	470 to 806 MHz See PA702MP / PA704MP Channel Range Table	
	Level	0.0 to 8.0 dBm (±1dB)	
	Connector / Impedance	SMA female / 50 Ohms	
	Return Loss	-20dB typical (-18dB Max)	
Output	Frequency Range	470 to 806 MHz	
	Output Power	215 Wrms (ATSC 3.0) 225 Wrms (ATSC 1.0)	400 Wrms (ATSC 3.0) 450 Wrms (ATSC 1.0)
	RF Sample	470 to 806 MHz / +10dBm	
	Connector / Impedance	DIN 7/16” female – 50 Ω	
	Return Loss	-20dB typical (-18dB Max) - measured with the drawer off	
	Harmonics / Spurious	-30dBc	
	Average MER	Better than 33dB: Pout = 215Wrms@ ATSC 3.0 Better than 36dB: Pout= 225Wrms @ATSC 1.0	Better than 33dB: Pout = 400Wrms@ ATSC 3.0 Better than 36dB: Pout= 450Wrms @ATSC 1.0
General	Communication Interface	USB / RS-485	
	AC Mains	100Vac to 254VAC / 43 to 63Hz	180Vac to 254VAC / 43 to 63Hz
	Power Factor	> 0.92	
	Gain	52dB (± 4.0dB)	
	Average Efficiency	32% typical @ ATSC 3.0 Pout: 215W	32% typical @ ATSC 3.0 Pout: 400W

6.2.3. Power Amplifier Block Diagram

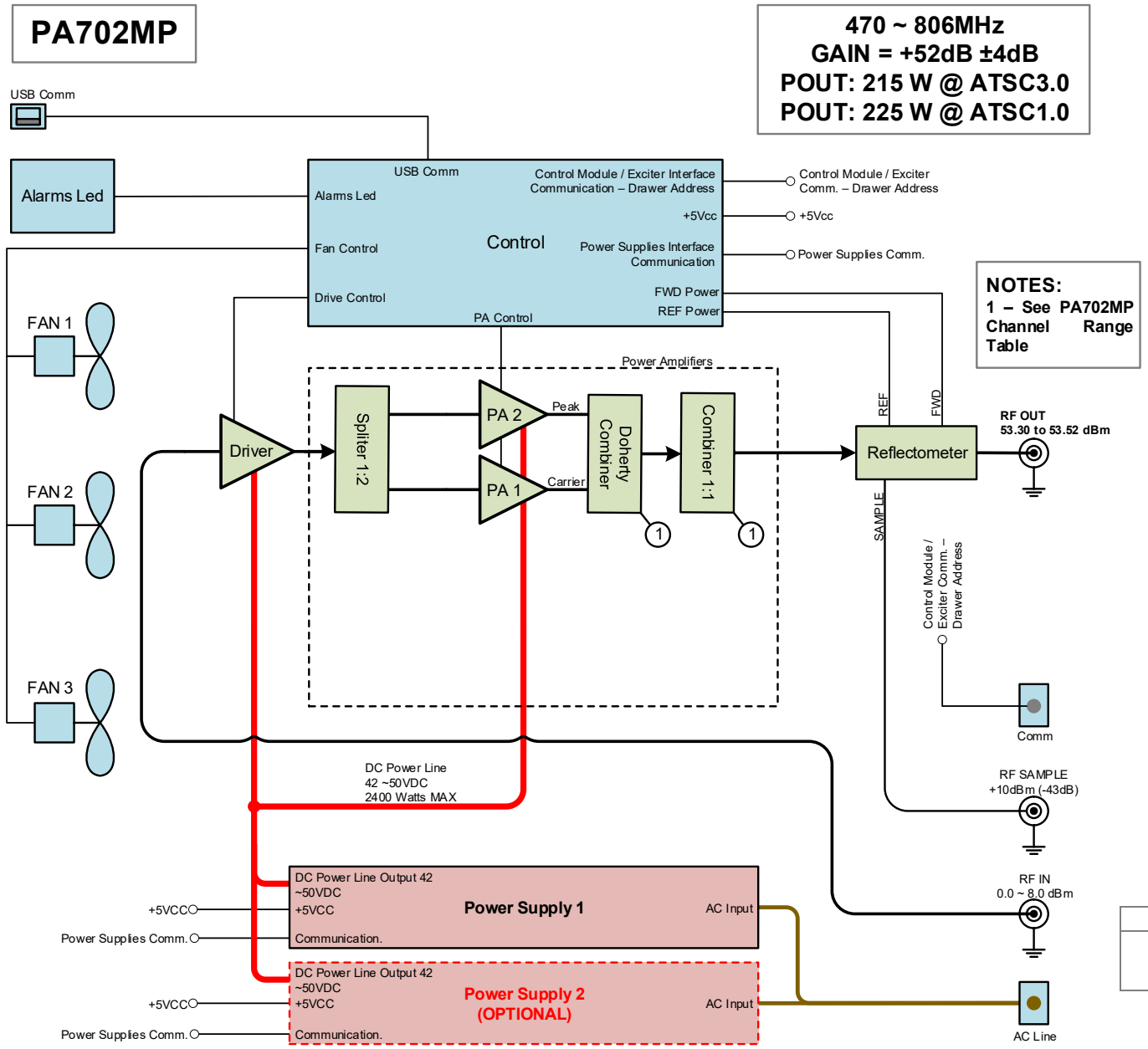

Block Diagram
PA702MP

CHANEL RANGE	PA702MP DOHERTY COMBINER	PA702MP COMBINER 1:1
14 ~ 17	HKL1001100 - MOD CIM 30238 470-494MHZ MP	HKL1003777 - MOD 40176 SOM 1:1 470-570MHZ MP
18 ~ 21	HKL1001101 - MOD CIM 30239 494-518MHZ MP	HKL1003777 - MOD 40176 SOM 1:1 470-570MHZ MP
22 ~ 24	HKL1001102 - MOD CIM 30240 518-534MHZ MP	HKL1003777 - MOD 40176 SOM 1:1 470-570MHZ MP
25 ~ 26	HKL1001103 - MOD CIM 30241 534-550MHZ MP	HKL1003777 - MOD 40176 SOM 1:1 470-570MHZ MP
27 ~ 29	HKL1001104 - MOD CIM 30242 550-566MHZ MP	HKL1003777 - MOD 40176 SOM 1:1 470-570MHZ MP
30 ~ 33	HKL1001105 - MOD CIM 30243 566-590MHZ MP	HKL1003779 - MOD 40177 SOM 1:1 570-670MHZ MP
34 ~ 37	HKL1001107 - MOD CIM 30244 590-614MHZ MP	HKL1003779 - MOD 40177 SOM 1:1 570-670MHZ MP
38 ~ 41	HKL1001108 - MOD CIM 30245 614-638MHZ MP	HKL1003779 - MOD 40177 SOM 1:1 570-670MHZ MP
42 ~ 45	HKL1001109 - MOD CIM 30246 638-662MHZ MP	HKL1003779 - MOD 40177 SOM 1:1 570-670MHZ MP
46	HKL1001110 - MOD CIM 30247 662-686MHZ MP	HKL1003779 - MOD 40177 SOM 1:1 570-670MHZ MP
47 ~ 49	HKL1001110 - MOD CIM 30247 662-686MHZ MP	HKL1003781 - MOD 40178 SOM 1:1 670-770MHZ MP
50 ~ 53	HKL1001111 - MOD CIM 30248 686-710MHZ MPP	HKL1003781 - MOD 40178 SOM 1:1 670-770MHZ MP
54 ~ 57	HKL1001112 - MOD CIM 30249 710-734MHZ MP	HKL1003781 - MOD 40178 SOM 1:1 670-770MHZ MP
58 ~ 61	HKL1001113 - MOD CIM 30250 734-758MHZ MP	HKL1003781 - MOD 40178 SOM 1:1 670-770MHZ MP
62 ~ 63	HKL1001114 - MOD CIM 30251 758-782MHZ MP	HKL1003781 - MOD 40178 SOM 1:1 670-770MHZ MP
64 ~ 65	HKL1001114 - MOD CIM 30251 758-782MHZ MP	HKL1003783 - MOD 40179 SOM 1:1 770-806MHZ MP
66 ~ 69	HKL1001115 - MOD CIM 30252 782-806MHZ MP	HKL1003783 - MOD 40179 SOM 1:1 770-806MHZ MP

Channel RangeTable

PA702MP

PA704MP

470 ~ 806MHz
GAIN = +52dB ±4dB
POUT: 400 W @ ATSC3.0
POUT: 450 W @ ATSC1.0

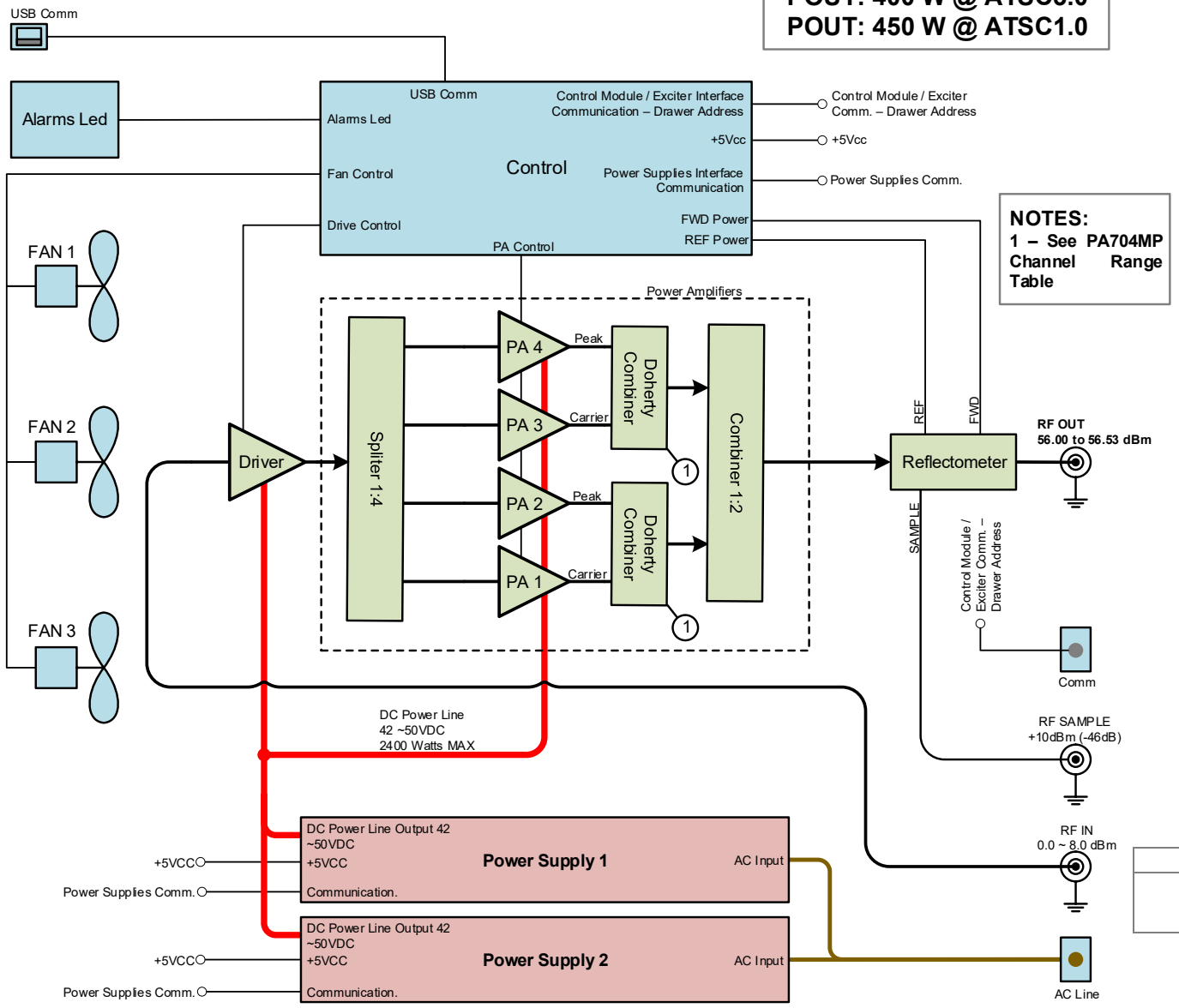

NOTES:
1 – See PA704MP Channel Range Table

Block Diagram
PA704MP

CHANEL RANGE	PA704MP DOHERTY COMBINER
14 ~ 17	HKL1000524 - MOD CIM 30146 470-494MHZ MP
18 ~ 21	HKL1000525 - MOD CIM 30147 494-518MHZ MP
22 ~ 24	HKL1000526 - MOD CIM 30148 518-534MHZ MP
25 ~ 26	HKL1000527 - MOD CIM 30149 534-550MHZ MP
27 ~ 29	HKL1000528 - MOD CIM 30161 550-566MHZ MP
30 ~ 33	HKL1000529 - MOD CIM 30150 566-590MHZ MP
34 ~ 37	HKL1000530 - MOD CIM 30151 590-614MHZ MP
38 ~ 41	HKL1000531 - MOD CIM 30152 614-638MHZ MP
42 ~ 45	HKL1000532 - MOD CIM 30153 638-662MHZ MP
46 ~ 49	HKL1000533 - MOD CIM 30154 662-686MHZ MP
50 ~ 53	HKL1000534 - MOD CIM 30155 686-710MHZ MP
54 ~ 57	HKL1000535 - MOD CIM 30156 710-734MHZ MP
58 ~ 61	HKL1000536 - MOD CIM 30157 734-758MHZ MP
62 ~ 65	HKL1000537 - MOD CIM 30158 758-782MHZ MP
66 ~ 69	HKL1000538 - MOD CIM 30159 782-806MHZ MP

Channel RangeTable

PA704MP

6.2.4. Signaling LEDs

Each Power Amplifier Drawer Features a LED bank that indicates the situation of its operation according to the color As shown below::

Green	Normal operation.
Orange	Orange light indicates That a failure has **occurred**.
Red	Flashing Red light indicates an **ongoing** failure.

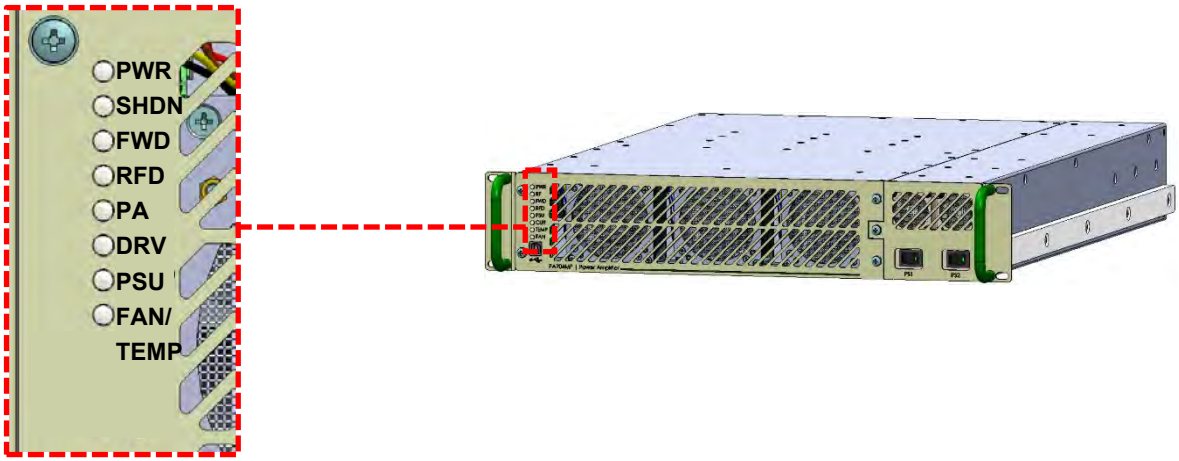

LED	ALARM
PWR	N/A - This LED lights only GREEN indicating that is POWERED ON.
SHDN	Power Supply Shutdown
FWD	Over Forward Power (Overdrive)
RFD	Reflected Power
PA	PA Failure, High Current on PA, Low Current on PA, Current UNBAL on PA, Low Gain on PA, High Temperature on PA, Communication Failure on PA.
DRV	High Current on Driver, Low Current on Driver, Low Current on Pre Driver, High Current on Pre Driver, Low Gain on Driver, High Temperature on Driver, Low Voltage on Driver, Communication Failure on Driver, High Input Signal, High Driver Output Level.
PSU	Low AC Line Voltage, High AC Line Voltage, Low PSU Voltage, High PSU Voltage, High PSU Current, High PFC Temperature, High DC/DC Temperature, PSU Communication Failure.
FAN/TEMP	When detected slow speed of rotation or complete failure in any of the fans. High temperature input air of the power drawer (greater than 35ºC).

Alarm details are displayed by accessing the keyboard-display interface of the Control Module CM8001 in the menus:

⇨ Main Menu ⇨ System Alarms/Log [3000] ⇨ Drawers Alarms ⇨ Current Drawers Alarms [3310]

⇨ Main Menu ⇨ System Alarms/Log [3000] ⇨ Drawers Alarms ⇨ Past Drawers Alarms [3320]

6.2.5. Communication interface (COMM)

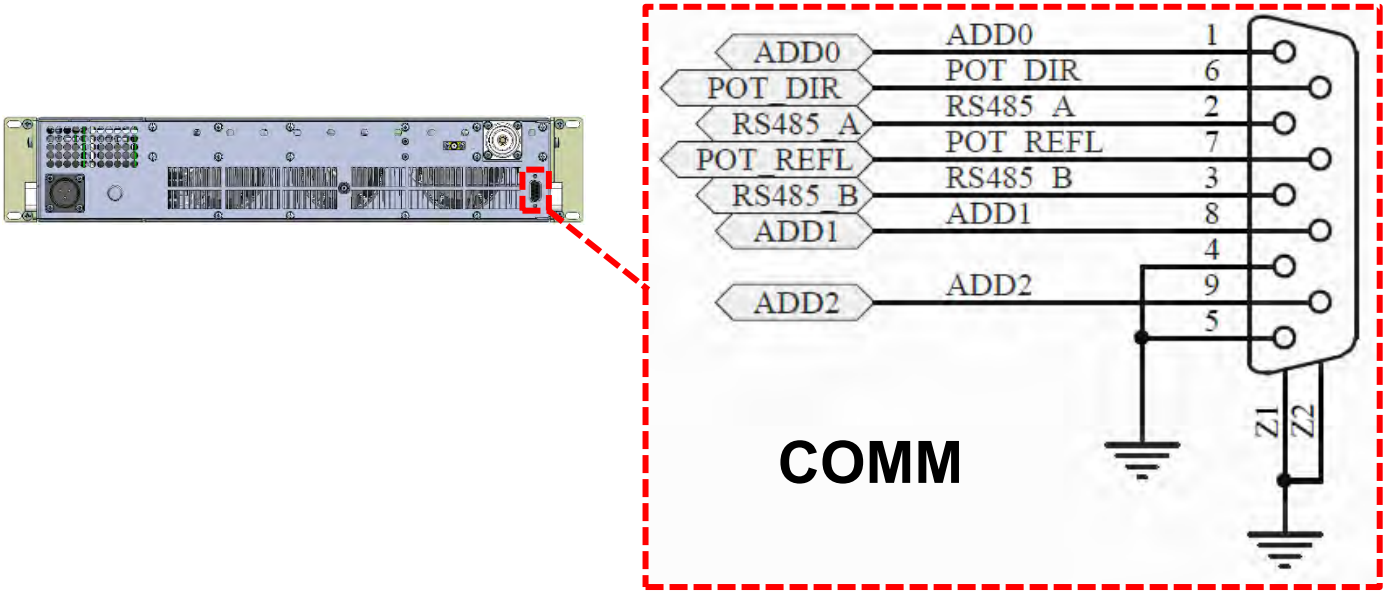

6.2.6. 1200 Watts Powers Supplies

The Power Amplifiers Drawers use two 1200 Watts plug-in power supplies. Each of the power supplies in the power amplifier converts 180-240VAC single-phase line voltage to 40-50VDC to power the RF pallets.

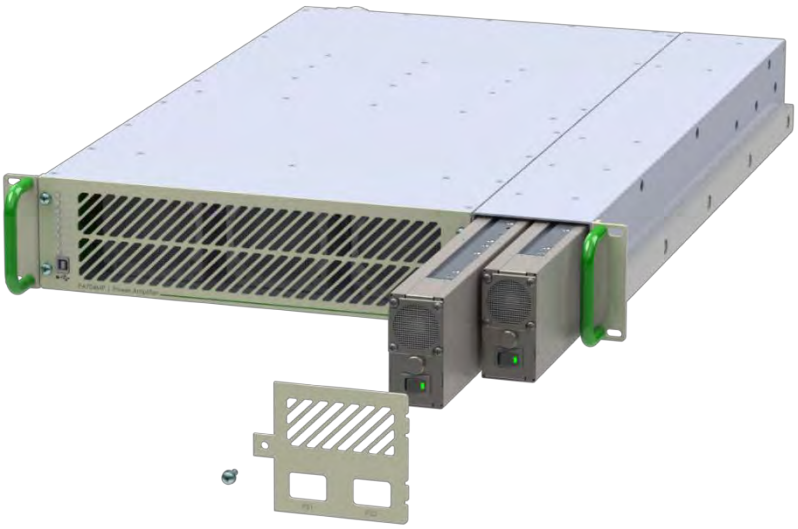

Never unplug any Power Supplies while the Transmitter is on. Risk of equipment damage.

The power supplies feature a quick-connect system that allows the unit to be easily removed through the front of the power amplifier chassis. The power supply includes power factor correction, built-in I-rush protection as well as overload protection (over-temperature, voltage, and current). The configuration of 2-PS per power amplifier provides a soft-fail mode.

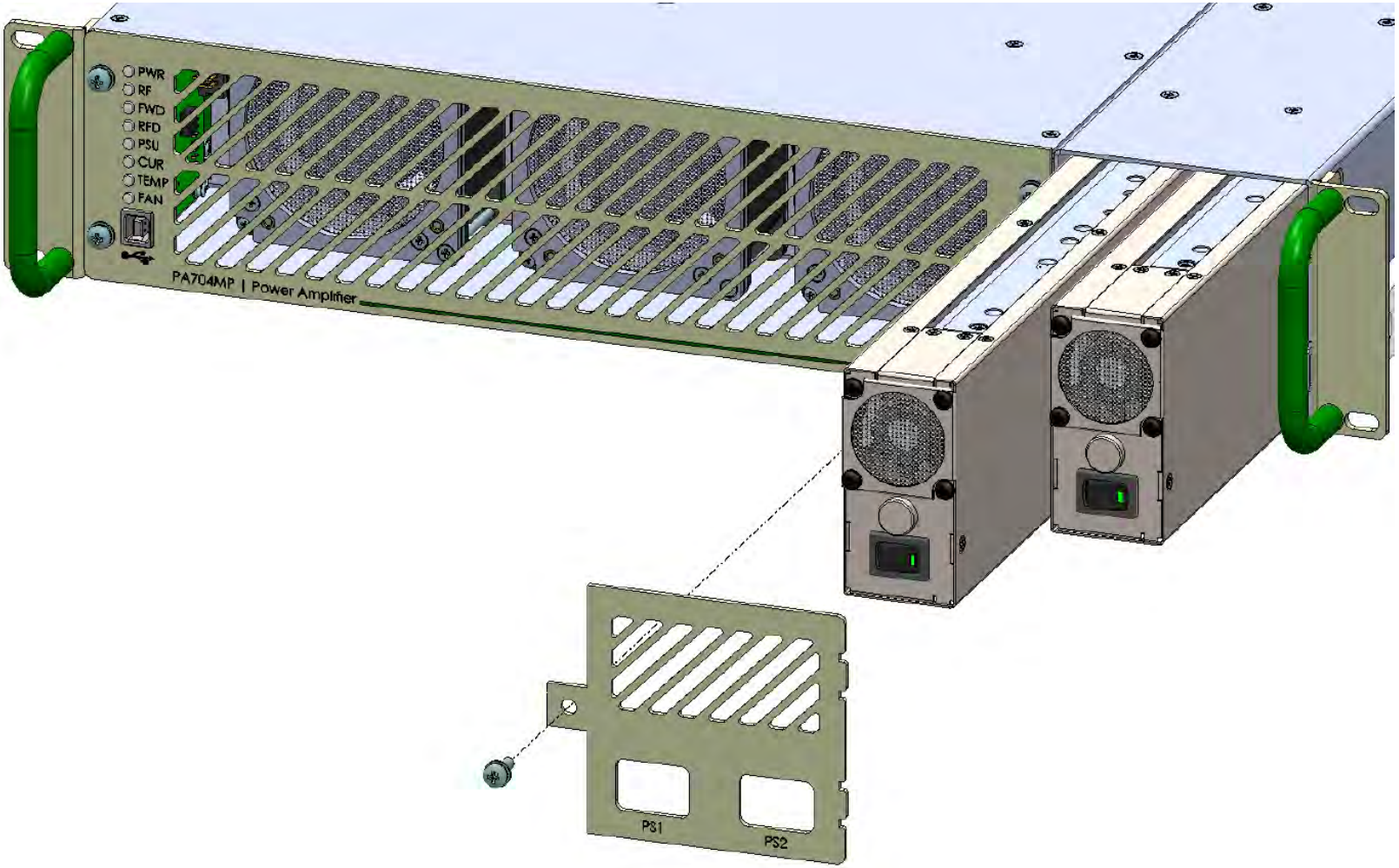

Power Supply Replacement

PA702MP / PA704MP

6.2.7. Power Supply 1200Watts – MOD 40241:

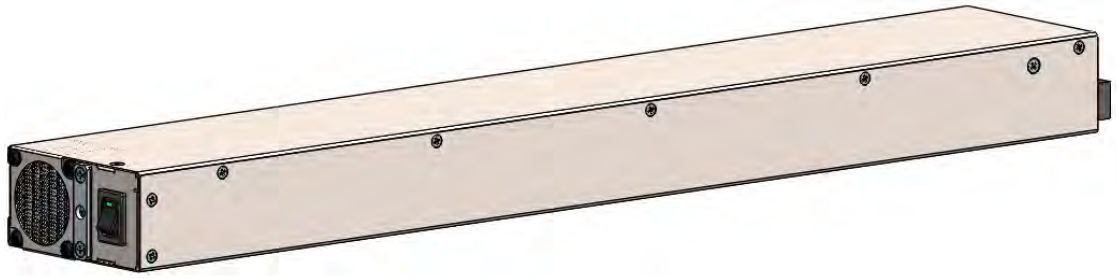

AC/DC Converter - PFC	
AC Mains Input	180 ~240 VAC
AC Mains Frequency	50 ~ 60Hz
Switching Frequency	100kHz
DC Output	375VDC
Power DC Output	1.32kW
Power Factor	> 0.92%

DC/DC Converter	
DC Input	350 ~400vdc
Switching Frequency	50kHz
DC Output	40 ~50vdc Adjustable
Power DC Output	1.2kW
Max Current	24A
Ripple	<400mVpp

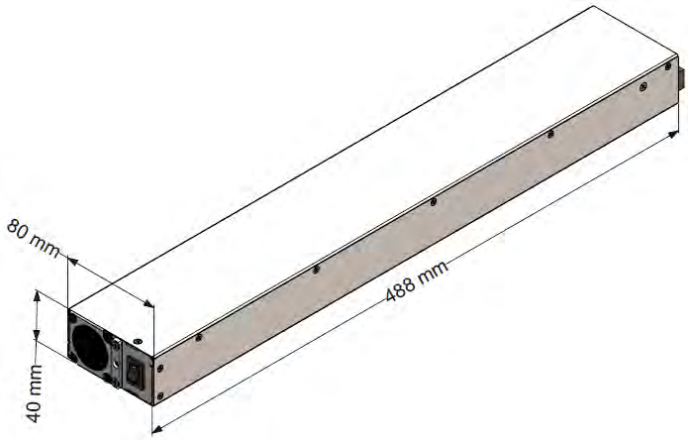

Flyback	
AC Mains Input	180 ~240 VAC
AC Mains Frequency	50 ~ 60Hz
Switching Frequency	65kHz
DC Output	+5VDC
Power DC Output	18W

Connection:

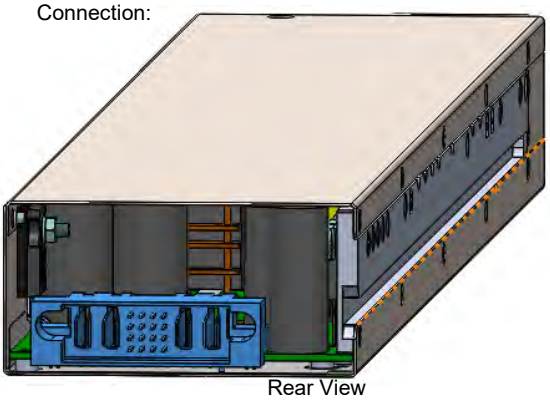

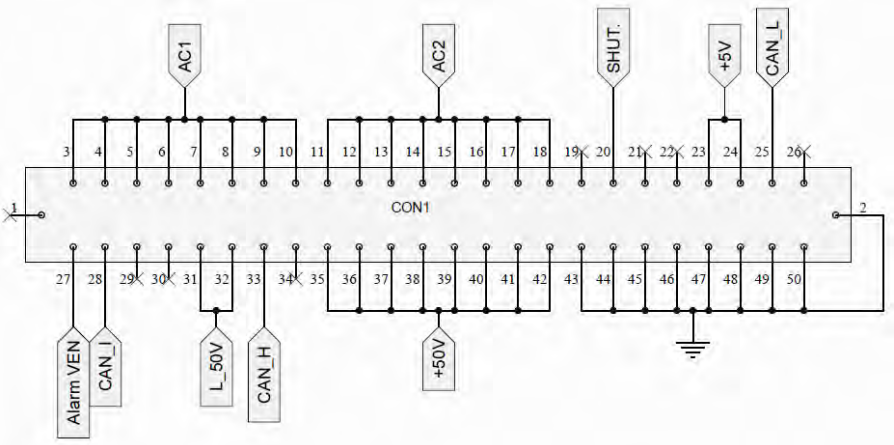

6.3. EIA 1-5/8” low pass filter

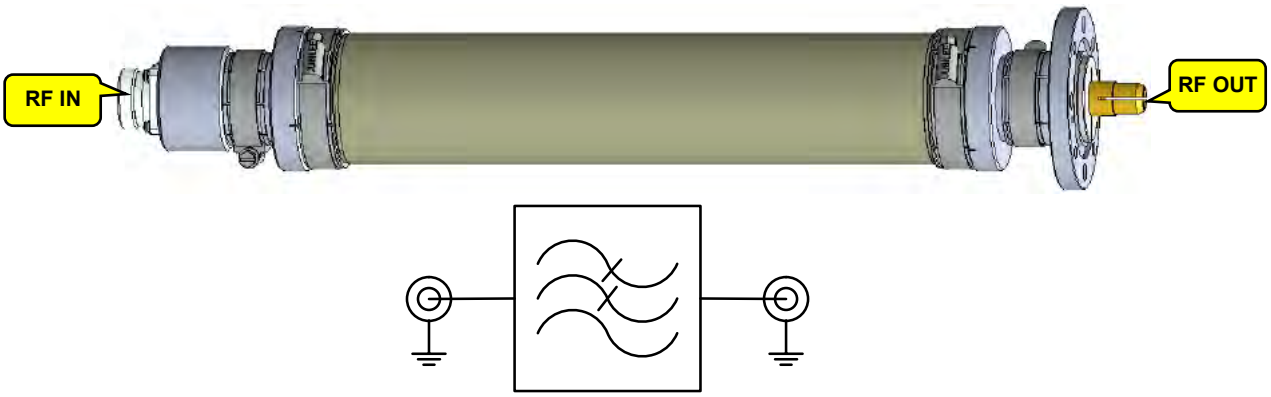

The Low Pass Filter is installed between the Power Amplifier Drawer RF Output and the Mask Filter attenuating unwanted harmonic products so that they do not return as reflected wave to the PA.

Low Pass Filter Frequency Range and Models:

CHANNEL RANGE	MODEL
14 to 36	HKL1007123 - MOD 40243 Fil PB 470-608MHz
37 to 53	00057663 - MOD 40055 FIL PB 590-710
54 to 69	HKL1007123 - MOD 40243 Fil PB 470-608MHz

6.3.1. Features

Operation Frequency	470 to 608MHz CH14 to CH36 (MOD 40243) 608 to 710MHz CH37 to CH53 (MOD 40055) 710 to 806MHz CH54 to CH69 (MOD 40055)
Connector / Impedance	INPUT: DIN 7/16” 50 Ω OUTRPUT: EIA 1-5/8” / 50 Ω
Max Power	3300 Watts
Return Loss	-26dB (min) -30dB (typical)
Insertion Loss	-0,06dB (max) -0,05dB (typical)
Second Harmonic Attenuation	Better than -30dB

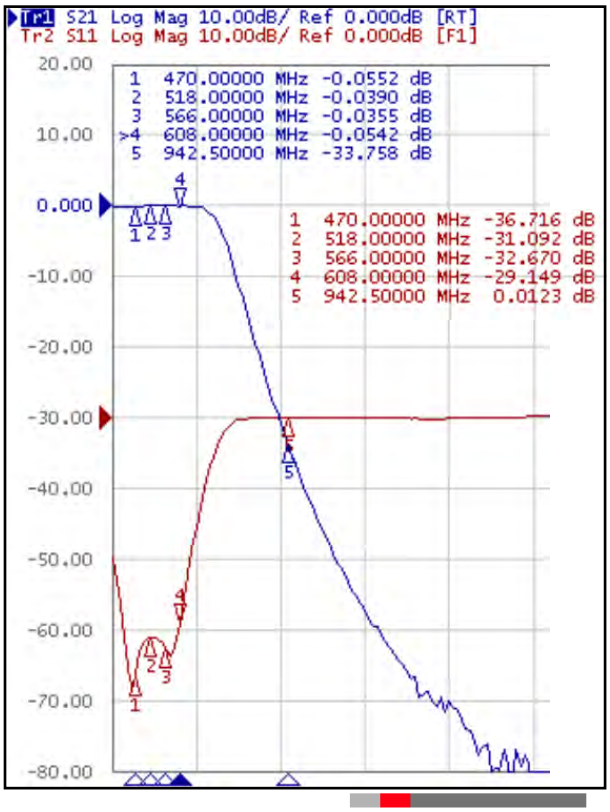

6.4. MOD 40215 EIA RF Output Line with Sample Probe

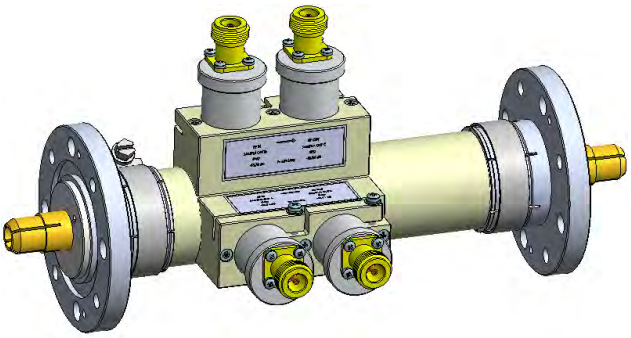

The 4.5. EIA RF Output Line with Sample Probe is a passive coaxial RF sample installed in the Mask Filter RF output and has four independent RF outputs samples.

It has two signal samples for use in the non-linear adjustment, a sample for the reflected power monitoring and a direct power monitoring sample.

6.4.1. Features

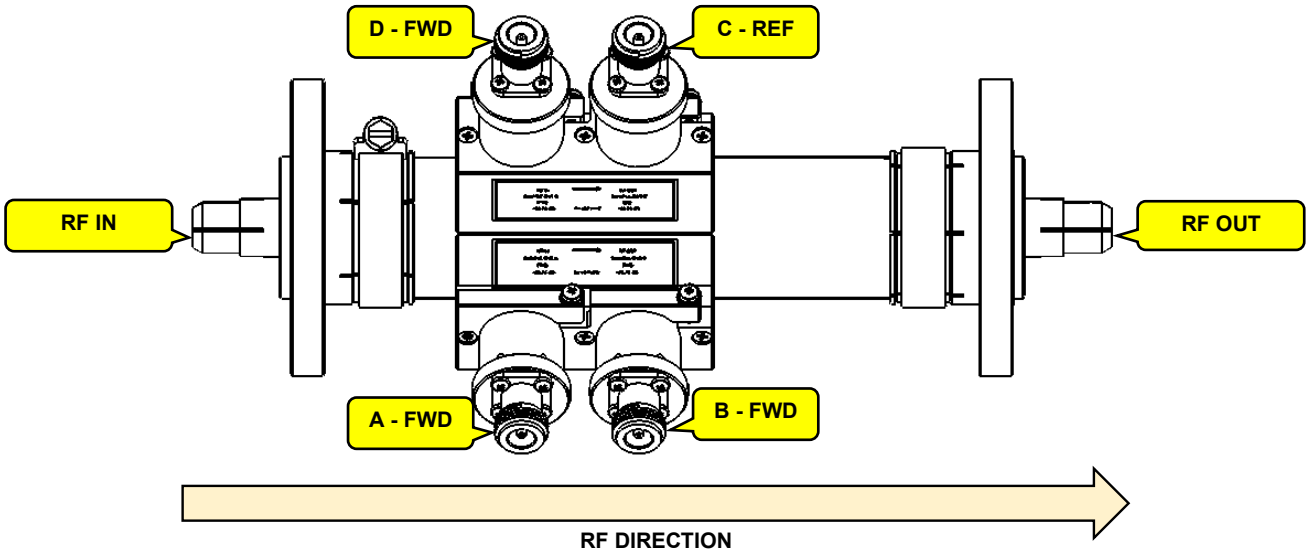

Operation Frequency	470 to 806MHz CH14 to CH69
Max Power	5500 Watts
Insertion Loss (RF IN – RF OUT)	-0.13dB (MAX); -0.10dB (MIN)
RF OUT	Connection: 1-5/8” EIA Flange Return Loss: -36dB (TYPICAL); -31dB (MIN) Impedance: 50Ω
RF IN	Connection: 1-5/8” EIA Flange Return Loss: -36dB (TYPICAL); -31dB (MIN) Impedance: 50Ω

A – FWD Sample	Use for Non-Linear Correction Forward Power Sample Connection: N Coupling: -52dB (MAX); -61dB (MIN) Impedance: 50Ω
B – FWD Sample	
C – REF Sample	To monitor Reflected Power Output. Reflected Power Sample Connection: N Coupling: -52dB (MAX); -61dB (MIN) Impedance: 50Ω
D – FWD Sample	To monitor Forward Power Output. Forward Power Sample Connection: N Coupling: -52dB (MAX); -61dB (MIN) Impedance: 50Ω
Samples Return Loss	-28dB (TYPICAL); -27dB (MIN)
Insulation between RF OUT And FWD Samples A, B and D	-30dB (TYPICAL); -27dB (MIN)
Insulation between RF IN And REF Sample C	-30dB (TYPICAL); -27dB (MIN

Check on the Sample output connectors labels the coupling curve for the corresponding frequency of the equipment.

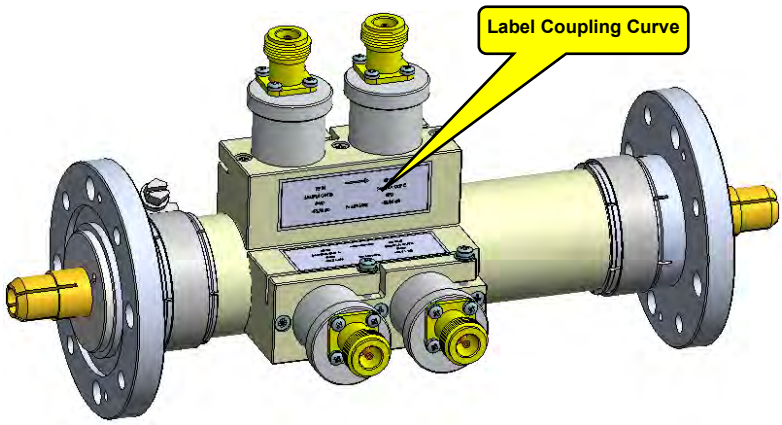

6.5. AC Mains Protection Unit

The AC Protection Unit is responsible for the AC Power distribution and Equipment AC Power protection.
Characteristics:

- ⇨ Surge Protection Device (SPD).
- ⇨ Circuit Breaker.
- ⇨ AC Line Input.
- ⇨ AC Mains Internal distribution.
- ⇨ AC Mains Available:

M208	1 Φ 190~240VAC Neutral GND
B240	2 Φ 190~240VAC GND
T208 / T240	3 Φ 190~240VAC GND
T380	3 Φ 190~240VAC Neutral GND

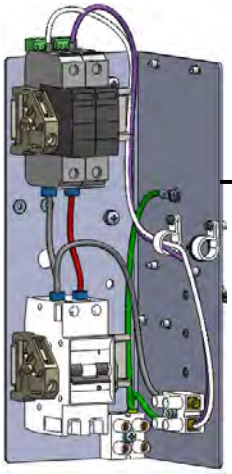

Mains Protection Unit

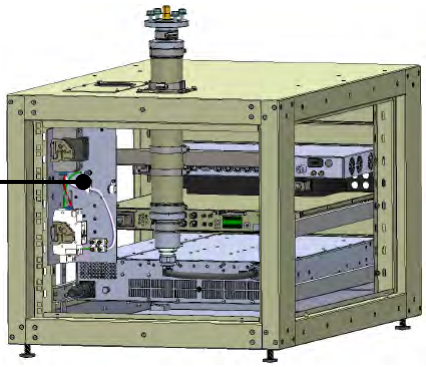

EC Medium Power – Rear View

6.5.1. Sparkover - Phase Surge Protection Device (SPD).

It is a device that limits overvoltages in the mains by diverting the current line to ground, in order to limit the amplitude of this overvoltage to a value that is not dangerous to the equipment. It is connected in parallel between the line and the ground and has high impedance. Once the transient overvoltage appears in the system, the impedance of the device decreases and directs the current to earth protecting the equipment. When this occurs, the device signals a red flag, needing for its replacement:

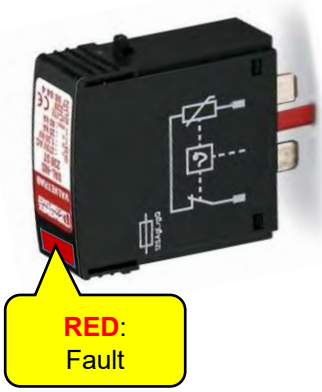

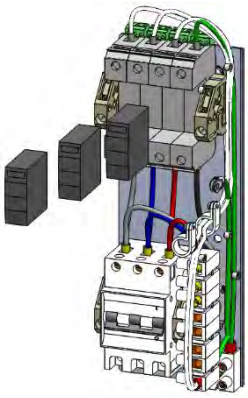

Sparkover Changing

Sparkovers types:

2798844 – 275VAC SURGE PROTECTION VARISTOR
2817990 – 260VAC SURGE PROTECTION SPARKLER
2807586 – 150VAC SURGE PROTECTION VARISTOR

M208

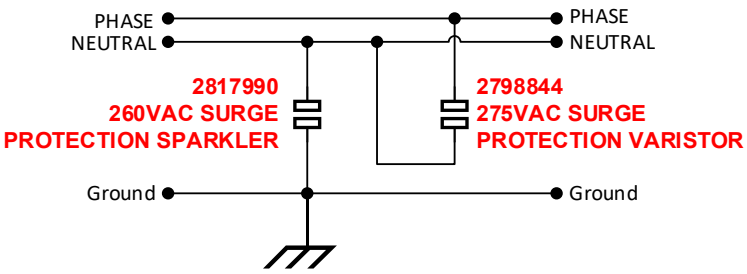

B240

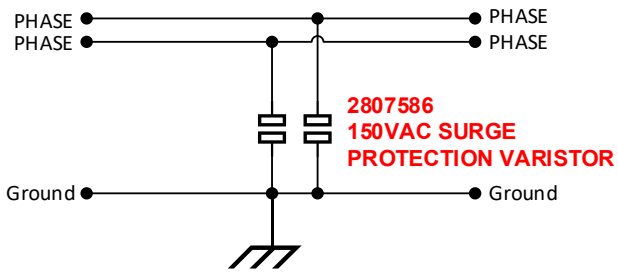

About AC MAINS TYPE, see Section 8 – Attachments, USA AC Mains Types for E-

Never open the device: there is a risk of electric shock. If necessary, contact Hitachi Service.

Before Connecting the Machine to the AC Mains, one must ensure that the grid Voltage meets the equipment's settings.

Never expose the equipment to rain, moisture or direct sunlight, in order to avoiding risk of fire or electric shock.

6.5.2. M208 Mains Protection Unit – 208VAC WILD LEG

1 Φ 208VAC
Neutral
GND

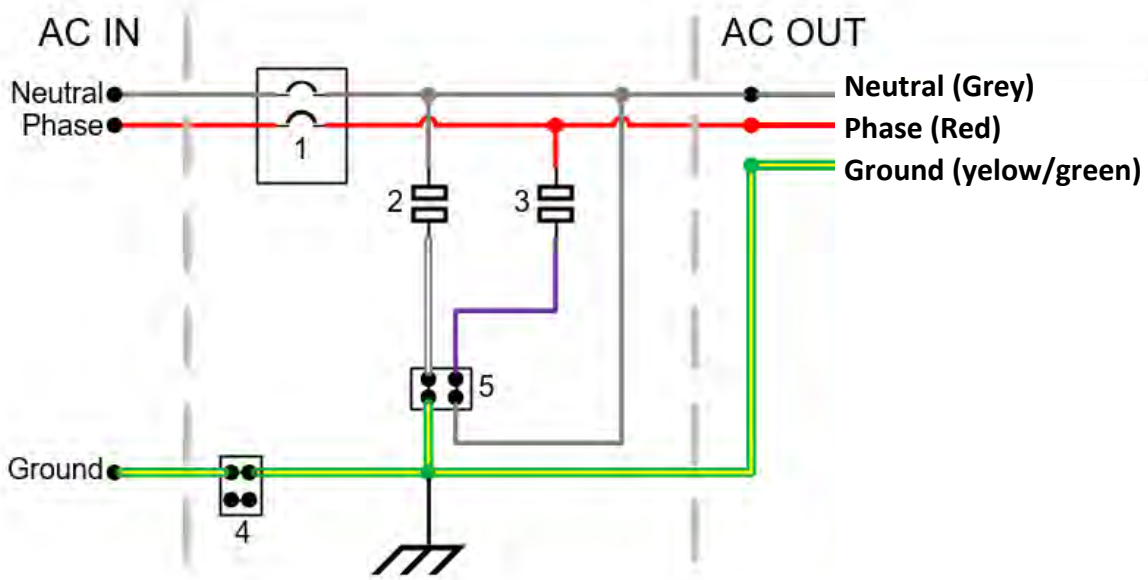

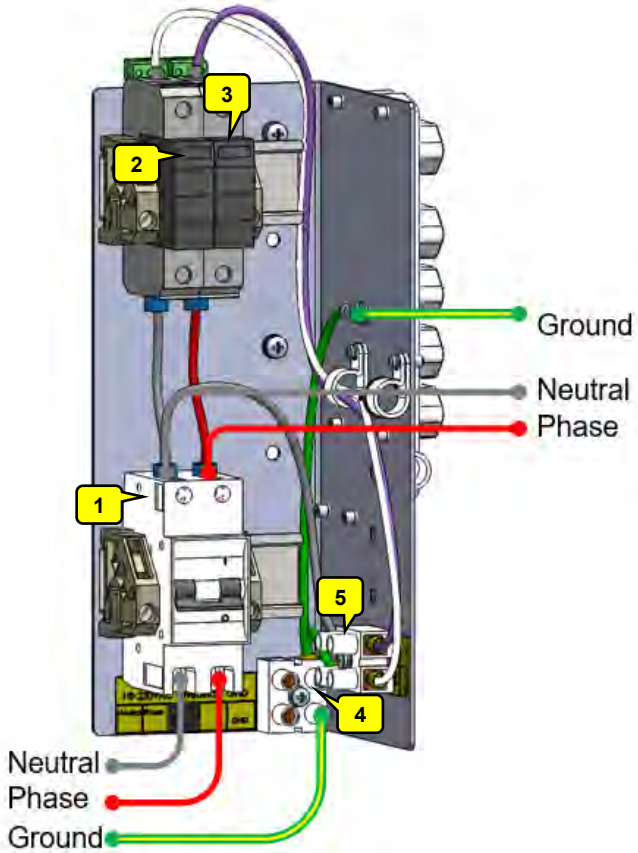

4	GND / Neutral Input Connector
5	GND / Neutral Protection Connector

6.5.3. B240 Mains Protection Unit –SINGLE PHASE 240 VAC

2 Φ 240VAC
GND

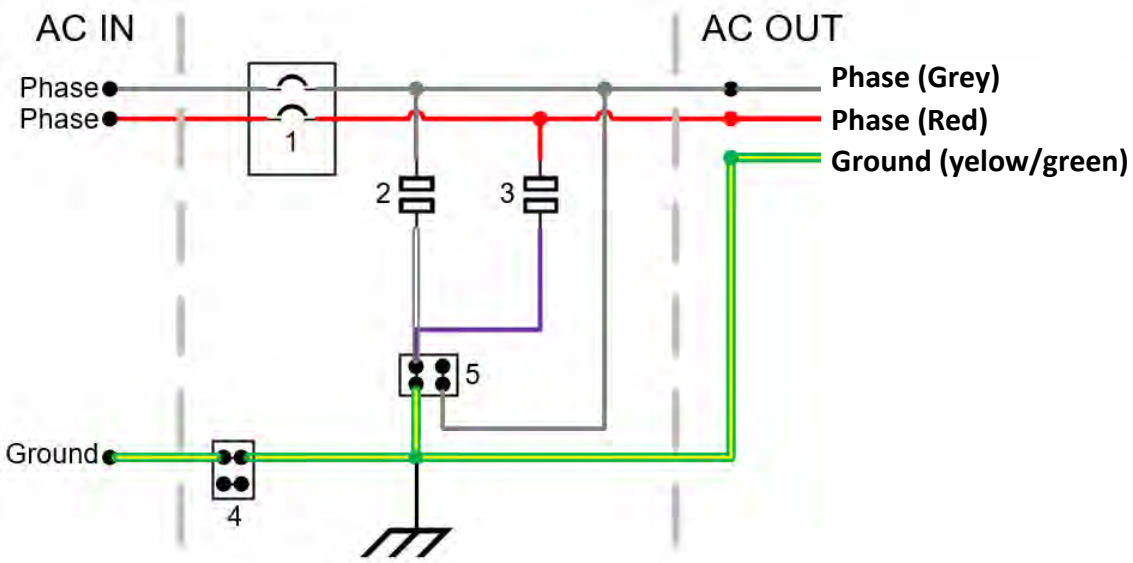

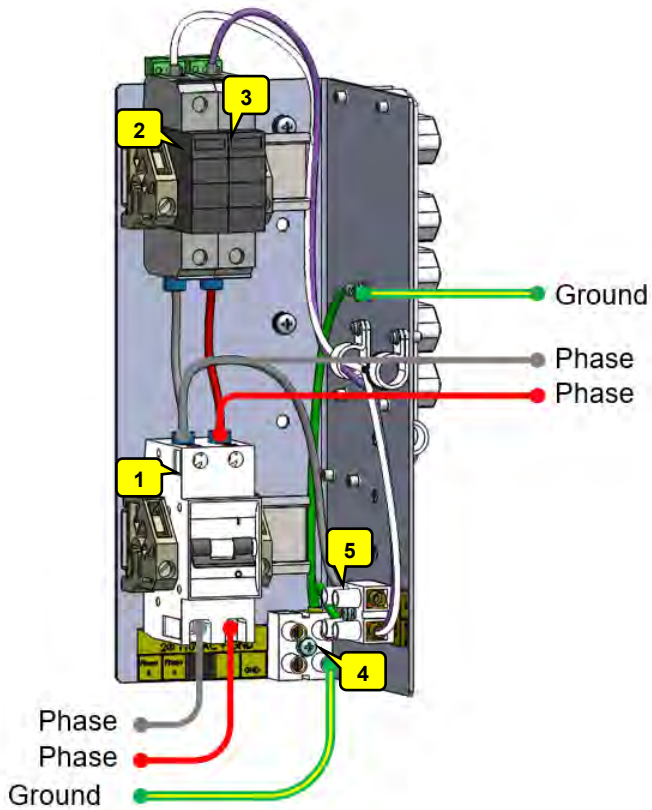

3	Varistor VAL-MS 120 ST - 150Vac
4	GND / Neutral Input Connector
5	GND / Neutral Protection Connector

6.5.4. Changing AC Mains

Once the mains power is set at the factory, there is the possibility to change its input type feature for the following cases:

AC Main Factory Set	Setup Change Possibility			
	M208	**B240**	**T208 / T240**	**T380**
M208	Factory Set	USE B220 Setup See 6.5.3	Not Available	Not Available
B240	USE M220 Setup See 6.5.2	Factory Set	Not Available	Not Available

For Not Available cases, it is necessary to replace the complete AC Mains Module for the compatible electrical grid. Contact Hitachi Kokusai Linear Service.

When replacing the AC Mains type, pay attention to circuit breakers, varistors and sparklers models for their characteristics. Each type of AC Mains uses different values of these protection components.

Using these protection components outside the features described in this manual may cause damage to the equipment.

6.6. Exciter Interface

The transmitters of the E-Compact Medium Power family have a monitoring interface for external exciters to communicate with the CM8001 Control Module. There are two interfaces, one for the main driver and one for the backup:

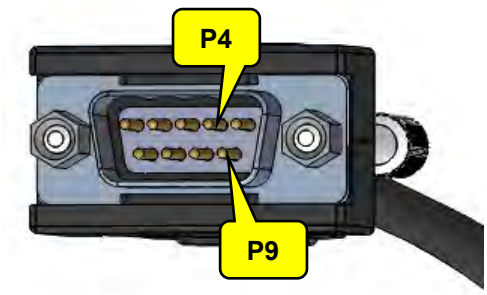

Control I/O In	Parameters	Status
P4	Exciter Status	Exciter Status to respective CM 8001 Controler.
P9	VCC	+5 VCC

DB9 Male – Exciter Communication

Section 4 – Installation

1. Overview.

This section provides general information for planning the installation of the E-Compact Medium Power Line Transmitters, such as recommendations regarding Shelter, Tower, Antennas, Cables, Grounding, Power Line, Prevention against Transients, etc.

2. Inspection.

The package and the equipment must be inspected upon delivery in order to detect eventual visible damages. If there are signs of violation or physical damage (which points to transportation problems), the corresponding evidences should be described in the delivery documentation provided by the transport company. Such notice would be used to establish the responsibilities for the product integrity.

Hitachi Kokusai Linear carries out operating tests at the factory on every transmitter in order to ensure proper operation after delivery to the user. Nevertheless, if the equipment does not operate after the start-up and there is no evidence of transportation damage, it might be necessary to send the equipment back to the factory for repair or replacement. In such a case, please get in contact with Hitachi Kokusai Linear Equipamentos Eletrônicos S/A's Technical Support Department.

3. Installation Recommendations.

3.1. Preventive Protection

Voltage transients with a duration of micro and nano-seconds are a constant challenge for solid state circuits. The downtime and the equipment maintenance make the preventive protection the best warranty against these surges. This protection can be in many forms, from isolation transformers and no-breaks to the more efficient but more expensive AC Voltage Protectors. Since lightning is the most common cause of transients, AC Voltage Protectors are the best choice.

An efficient AC Voltage Protection must be able to dissipate the energy to a low voltage, sufficient to guarantee the protection of the electronic components. The protection Must always be placed transversely to the AC line, even during blackout periods. In addition, it must be immediately and automatically turned-on and ready in case of repeated transients.

3.2. Tower

For the installation of the TV transmission and reception system, the tower must be made with hot-dip galvanized steel. A lightning protection system should be installed in the tower as well as nocturnal beacons bulbs with red glass.

The following information about the tower must be obtained:

a) It feature of special insulator supports for descent of cordage of lightning rod, with a space of 1,5m maximum between them.
b) There must be a lightning signaling system in every 20m along the tower.
c) It must be painted with orange and white stripes in every 2m with a special paint that complies with local regulations.
d) It must endure winds of up to 150 Km/h.

In a retransmission station the tower is the highest and therefore, the most vulnerable device to be hit by lightning and because of it, the tower is used as a part of the protection system. The lightning protection device used in these cases is called lightning rod and has the function of guiding the electrical discharge safely, avoiding other parts of the system to be hit and damaged by it.

The use of a lightning rod is MANDATORY. The project and installation of grounding and lightning protection systems must be performed by specialized companies. Eventual damage to the equipment caused by missing or malfunctioning arrester is not covered by warranty.

3.3. Fastening of cables, antennas and connectors

Please observe the following items when installing antennas:

Direction of Antennas and Aperture Angles

Use a pocket compass when directing the antenna. Use a field strength meter for the fine adjustment of the reception antenna.

Height

It mainly depends on the receiving signal and the transmission conditions (obstructions, attended area, etc). It's very important to verify how far the antenna is from the lightning protection device, since the antenna must stay inside its cone protection.

Distance between the Rx and Tx Antennas

They should be placed as far as possible from each other in order to isolate the transmitted signal from the received signal.

Polarization

It is very important to verify the polarization of the received signal, which can be vertical, horizontal or circular.

Phasing

When receiving a signal with vertical polarization, the system must be mounted vertically, otherwise the gain of the antenna will be drastically reduced, likewise in case of a signal with horizontal polarization.
To receive a signal with circular polarization with a non-circular antenna, the system can be mounted either vertically or horizontally.

Stacking antennas

When using this system, the distance between them depends on the kinds of antenna used and the kind of stacking used. This must be studied thoroughly in order to obtain the best solution for each case.

Cables and Connectors

All cables must be carefully installed in order not to be twisted during the installation process. When using 7/8" or 1/2" cables, please pay attention to their bending that must not be made in spaces smaller than 80cm. The cables can't force the connectors in the Input/Output of the equipment. The entry holes for the cables in the shelter must be done in a way to avoid the water that runs along them to get inside.

Follow the manufacturer 's instructions when assembling them. All splices done outside the shelter must be isolated with a special plastic tape and/or a plastic insulation material.

Avoid using silicon to coat the isolation made with auto-fusion tape. It has been verified that the silicon chemical characteristics may provoke the drying of the auto-fusion tape.

3.4. Indoors Equipment Installation

Small equipment must be placed on a table in a way to provide easy access from all sides and be at least one meter far from the walls.

Do not compromise the equipment’s air flow by placing objects on its top panel. Its natural ventilation.

The equipment must be placed directly on the shelter's floor as long as it is flat and they must be placed at least one meter far from the walls to avoid obstruction of its ventilation system.

Some of these air outlet must be connected to the outside of the shelter through PVC tubing.

The AC cable has two terminations to be used exclusively in the equipment.

3.5. Equipment Grounding

Assemble the grounding separately from the power supply, with a rig and a grounding terminal that come with the equipment.

Normally, the retransmission sites are located in the highest spot of the chosen location, making them more vulnerable to lightning strikes.

These discharges carry a great amount of electric energy, putting at risk not only the antenna and its structure but also the equipment in the shelters. In order to minimize this effect and guarantee their protection and continuous service during thunderstorms with lightning, the use of a reliable grounding system is mandatory.

Lightning is a transient, high-current electric discharge that happens between the ground and the clouds therefore the most important part of a lightning protection system are the parts that are on the ground. In order to maintain the low impedance of the technical grounding system, it must be carefully executed in a way that the electric field energy is drained away without affecting the equipment. In order to define a system, the characteristics of the soil resistivity must be taken into consideration.

To determine the behavior of the soil capacity to drain the currents, its resistivity has to be measured. For an adequate protection this value should not exceed 5 , being zero the ideal value

Generally, the grounding method used for TV retransmitters is a system with a single vertical electrode made with copper measuring 2.5 meters or more.

In case the conditions and characteristics of the soil are of high resistivity or high incidence of lightning discharges, the grounding system must be thoroughly analyzed.

It is very important to notice that the grounding systems of the equipment and the lightning rod are independent and should never be connected to each other. A poorly elaborated grounding system can cause damages to the equipment that won't be covered by the warranty.

3.6. Electric Installation Grounding

The shelter installations receive power through an aerial power line. Moreover, because of it, the lightning discharges that might hit the power lines generate power surges that can reach the shelter and consequently the equipment.

To protect the equipment against eventual power surges, we recommend the use of gas filled surge protectors, after an isolation transformer with electrostatic shield.

When installing the grounding system, please observe the following items:

Connect all equipment carcasses to the grounding system using the grounding rig that comes with them.

Connect the gate and all the wires from the fence to the grounding system. Connect the neutral wire from the public power line to the grounding system.

Connect the rig from the lightning rod to the grounding system with the shortest connection possible avoiding cable splices.

The tower’s structure must also be connected to the grounding system. Use porcelain isolators to insulate the lightning rod rig.

3.7. Power Supply

Before plugging the equipment to the power supply, verify the voltage in the outlet to make sure that is correct.If its variation is greater than 10%, it is necessary to use a power stabilizer to correct the voltage.

The power provided by the stabilizer must be at least 30% greater than the consumption of the equipment

4. Equipment Assembly

Only trained and trained personnel should conduct physical assembly on site.

Observe the requirements described in this manual in Sections 1 (Care, Warranty and Service) and Section 2 (Minimum Installation Requirements).

The following precautions must be taken when positioning the transmitter at the installation site:

(1) The air intake (front) and the air outlet (rear) must be completely unobstructed.

(2) The transmitter rack should be positioned to ensure easy access from either side. The distance between the transmitter and the walls of the shed must be at least 1.0 meter.

(3) In case of installation on a site containing other transmitters connected, do not position the transmitter in a location that can receive hot air from other transmitters.

4.1. Assembly

(1) Unpacking the transmitter and drawers.

(2) Position the rack where the equipment is installed in compliance with the following issues:

Antenna cable
AC Power Supply
RF Cable
Transport Stream (ASI) cables
Grounding point

(3) Visual Inspection:

Remove the lateral and rear panel of the transmitter and proceed to a visual inspection searching for any alteration that may have happened during the transportation of the equipment.

Pay special attention on the RF and signal cable connectors, ie. loose screws.

Check the power switches located on the left of the rear panel of the units, make sure they are in the "ON" position.

(4) Grounding:

For personal and equipment safety reasons, connect the ground of the of the transmitter room to the ground of equipment before proceeding to the next steps.

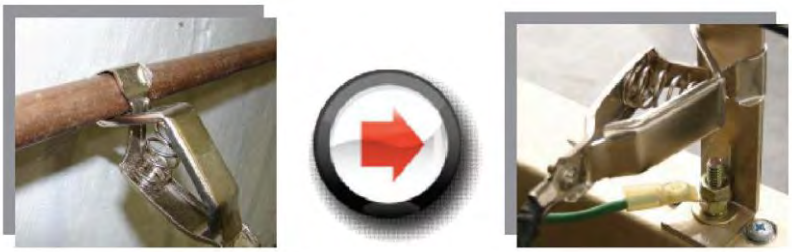

(5) Remove the cabinet rear and side housings to facilitate equipment mount.

Cabinet 8RU mount:

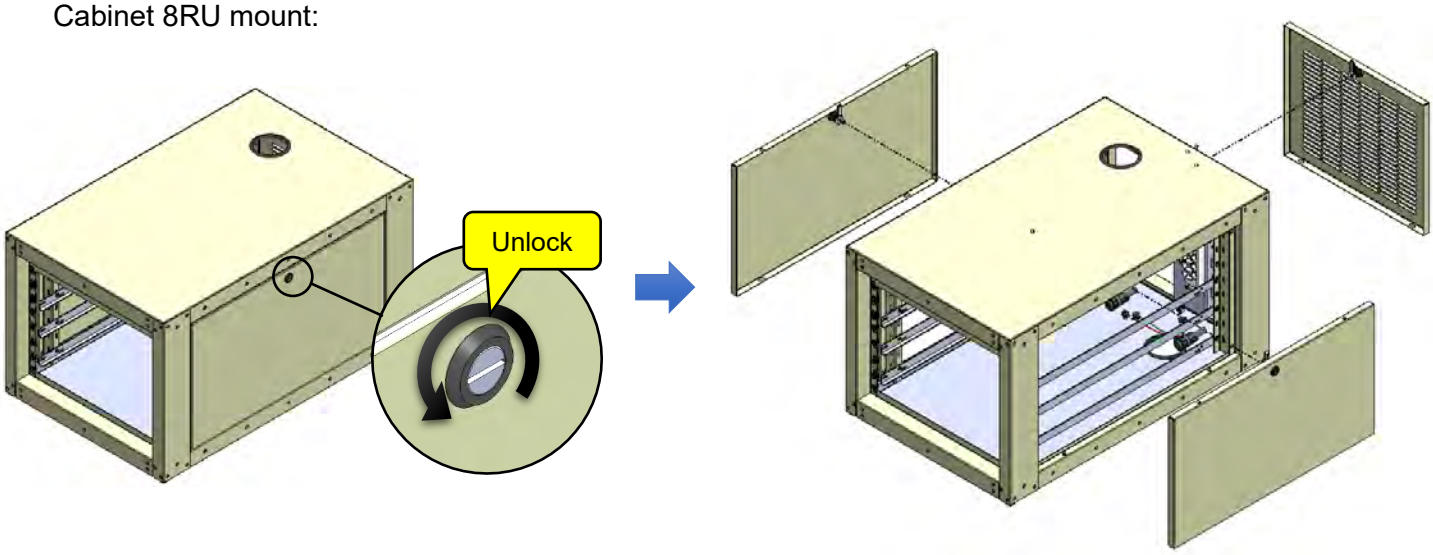

When finalizing the assembly and the Equipment is operating normally, close the cabinet whit the housings.

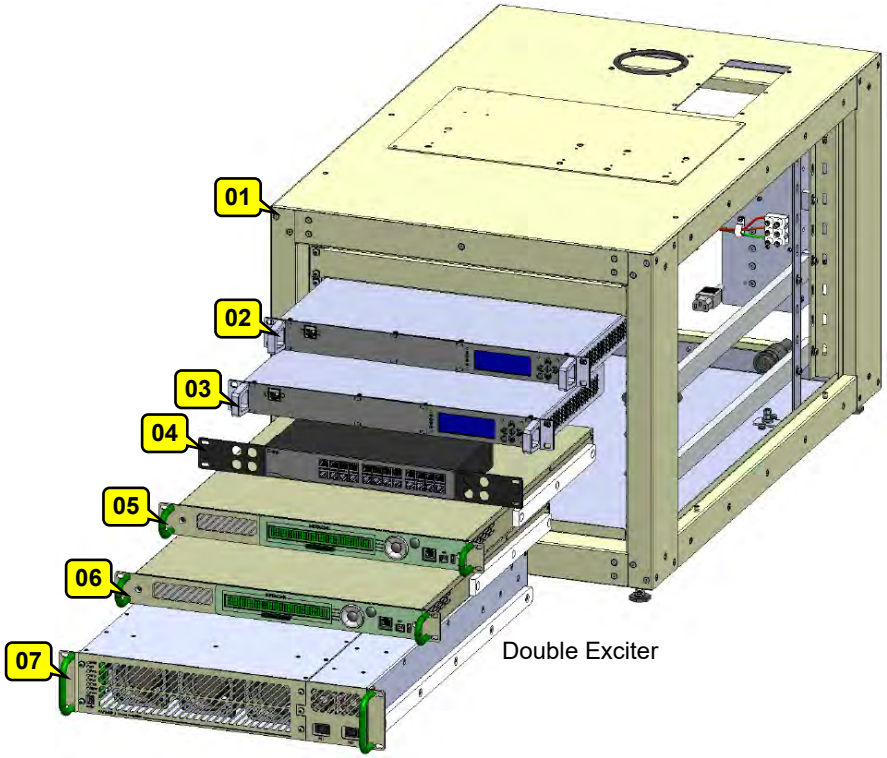

Double Exciter

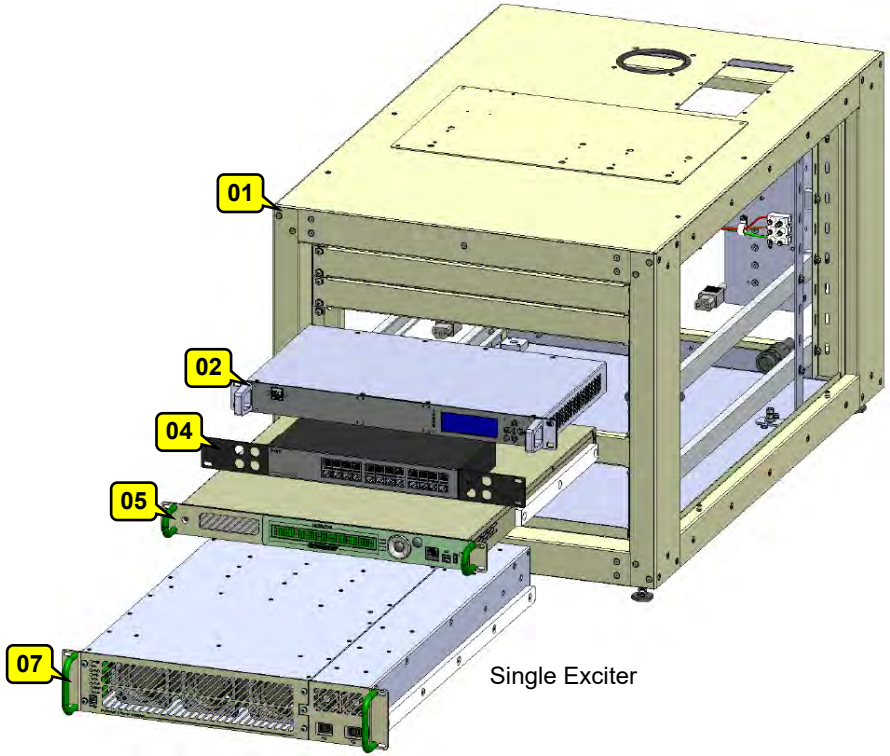

Single Exciter

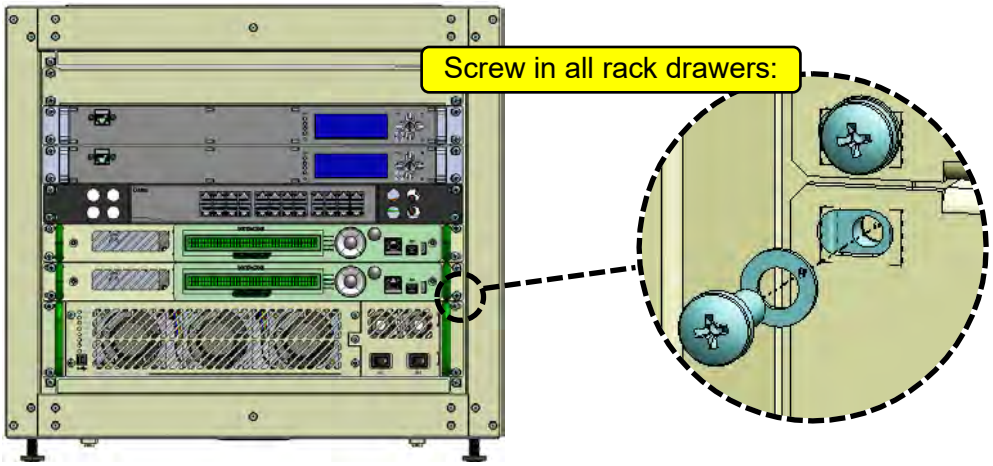

REF	DESCRIPTION
01	Cabinet 8RU
02	Main Exciter (NOT INCLUDED)
03	Backup Exciter (NOT INCLUDED)
04	Ethernet switch
05	Main CM8001 control module
06	Backup CM8001 Control Module
07	PA702MP – Power amplifier (EC702MP) PA704MP – Power amplifier (EC704MP)

EC702MP / EC704MP

CABINET DRAWERS MOUNT

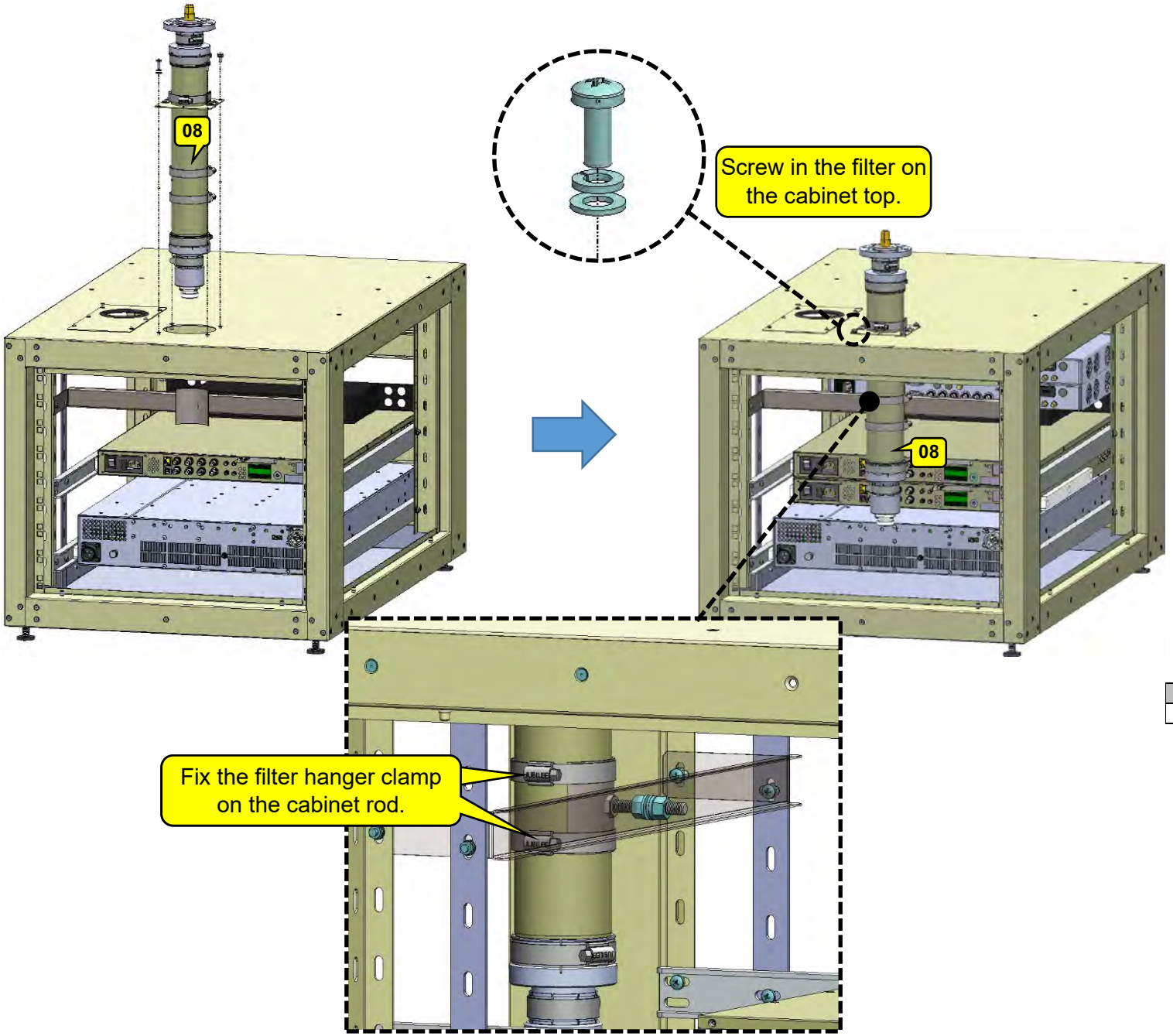

REF	DESCRIPTION
08	MOD 40243 - EIA 1-5/8” low pass filter

EC702MP / EC704MP

LOW PASS FILTER INSTAL

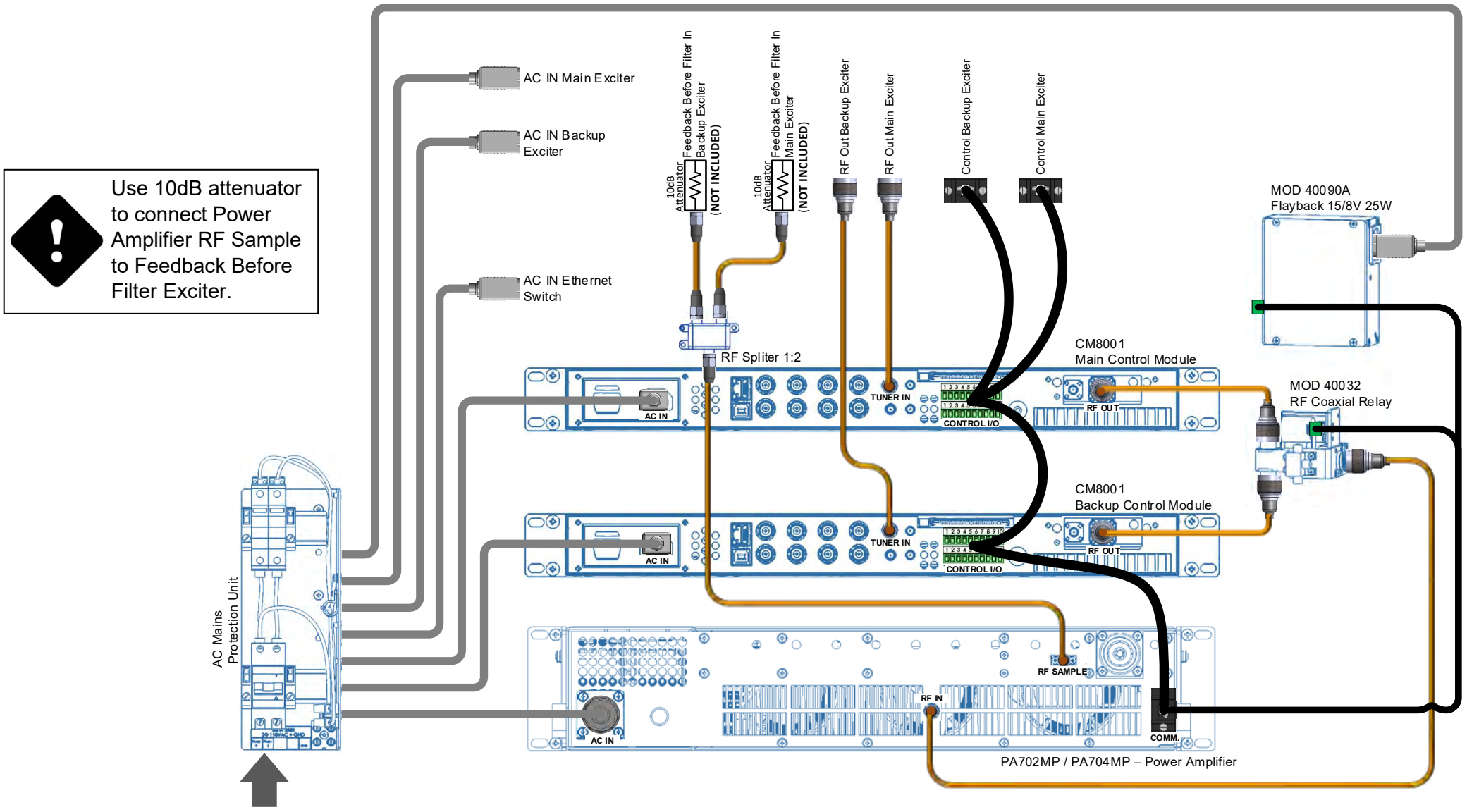

Use 10dB attenuator to connect Power Amplifier RF Sample to Feedback Before Filter Exciter.

Loosen all the fixed cables inside the rack by removing Yellow cable ties

EC702MP / EC704MP

REAR CONNECTIONS
DOUBLE EXCITER

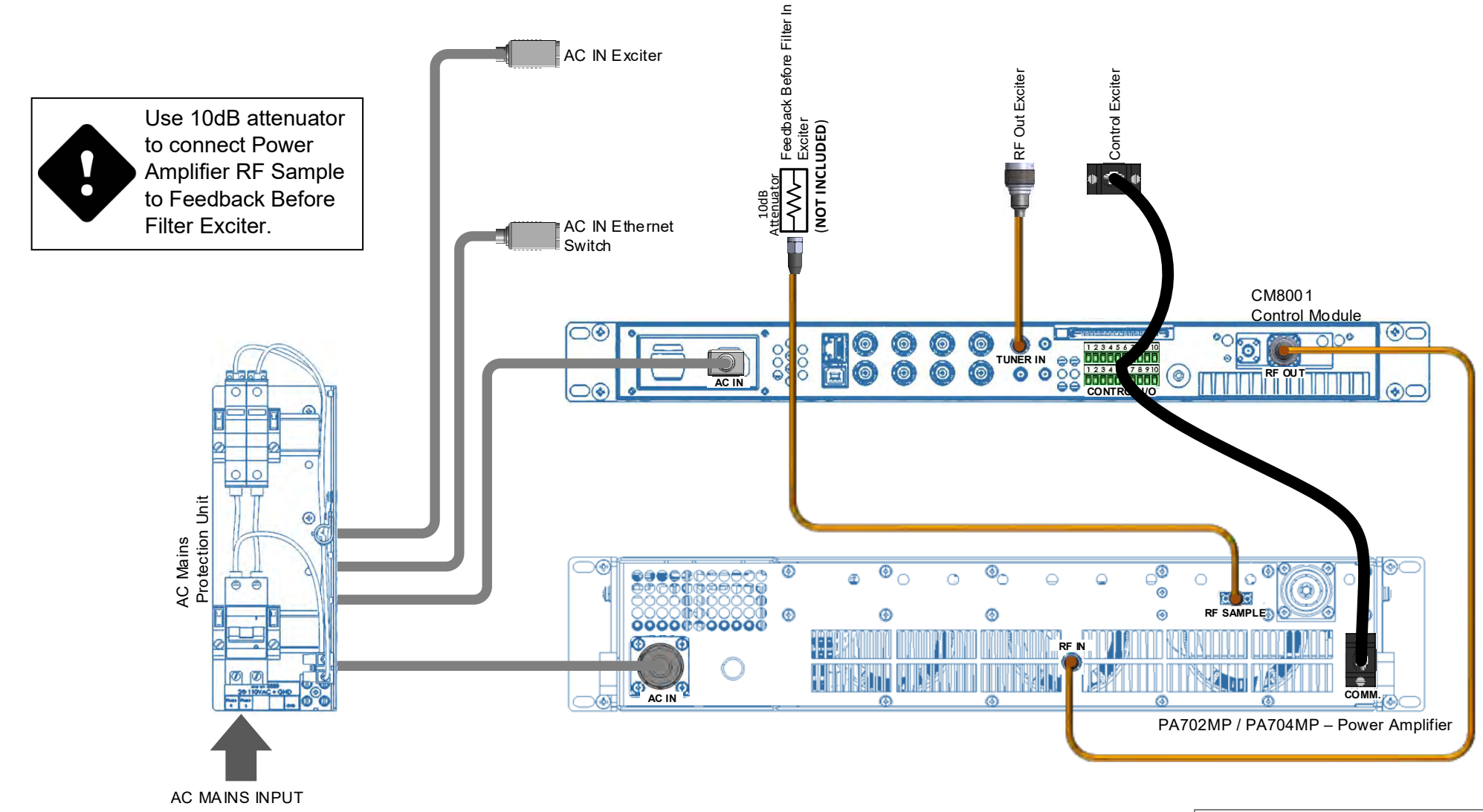

Loosen all the fixed cables inside the rack by removing Yellow cable ties

EC702MP / EC704MP

REAR CONNECTIONS
SINGLE EXCITER

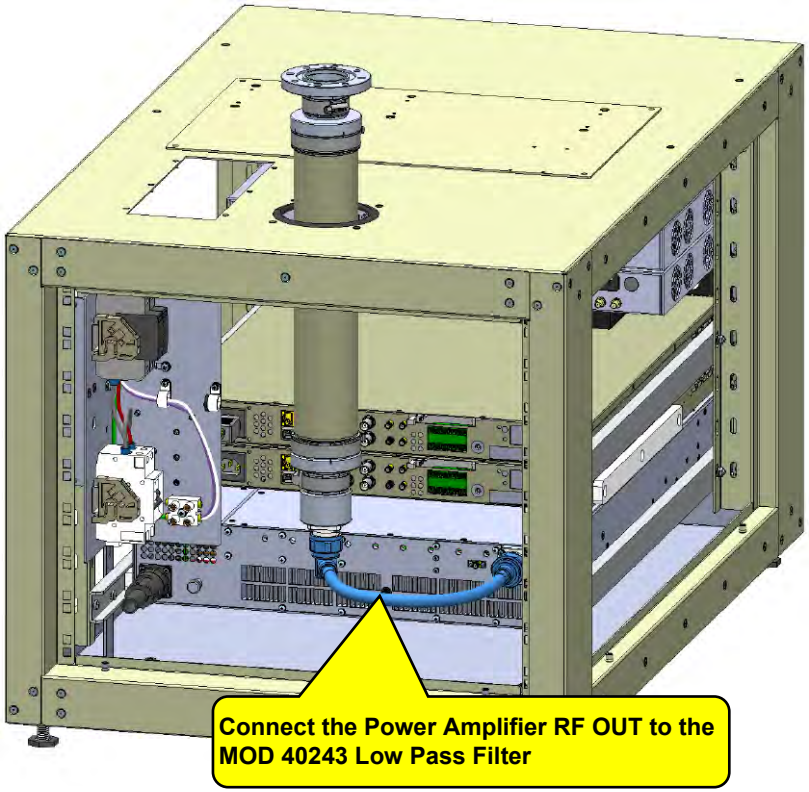

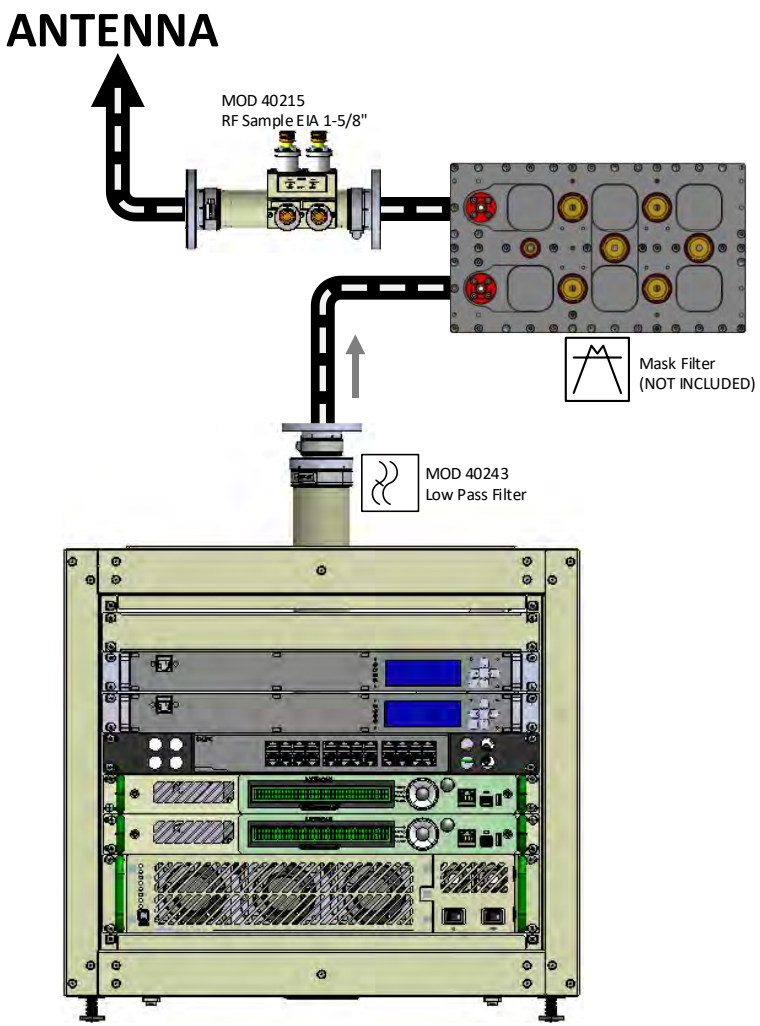

EC702MP / EC704MP

RF OUTPUT CONNECTIONS

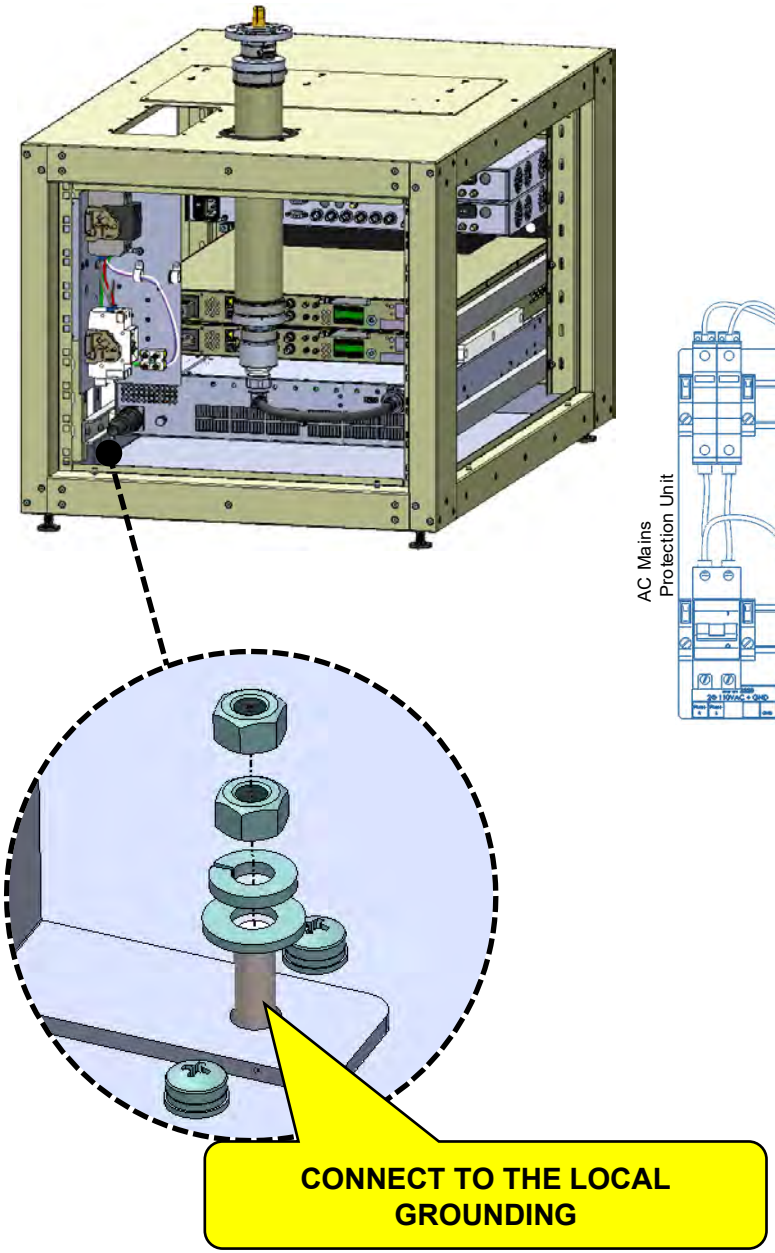

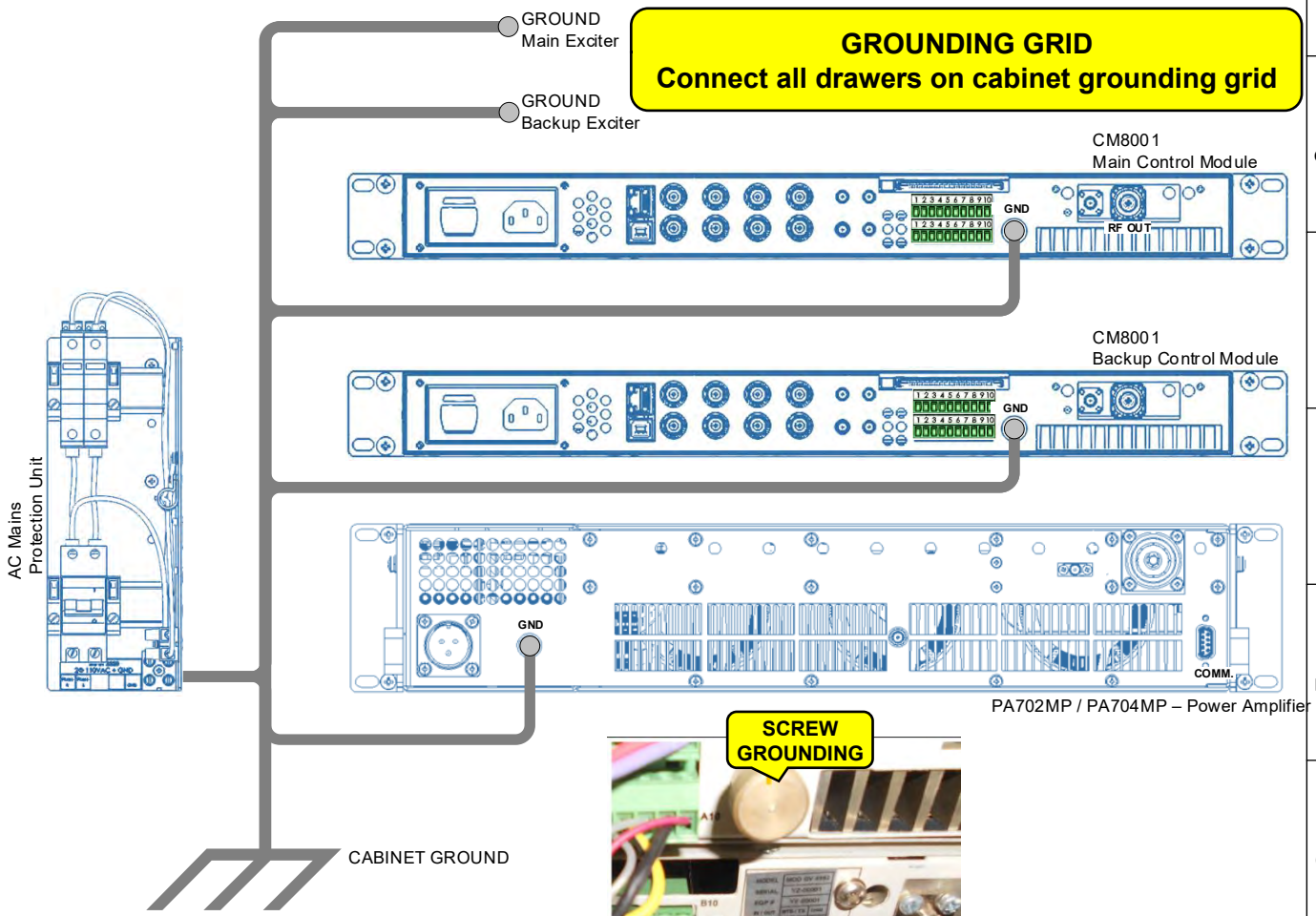

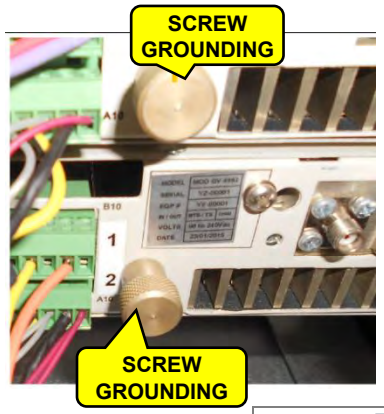

EC702MP / EC704MP

GROUND CONNECTIONS

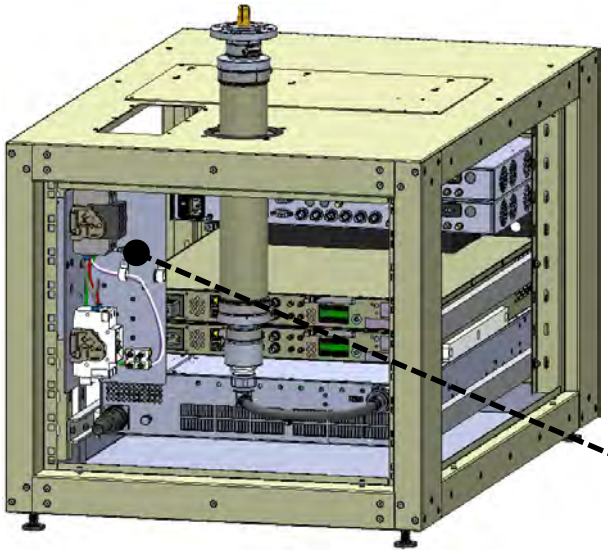

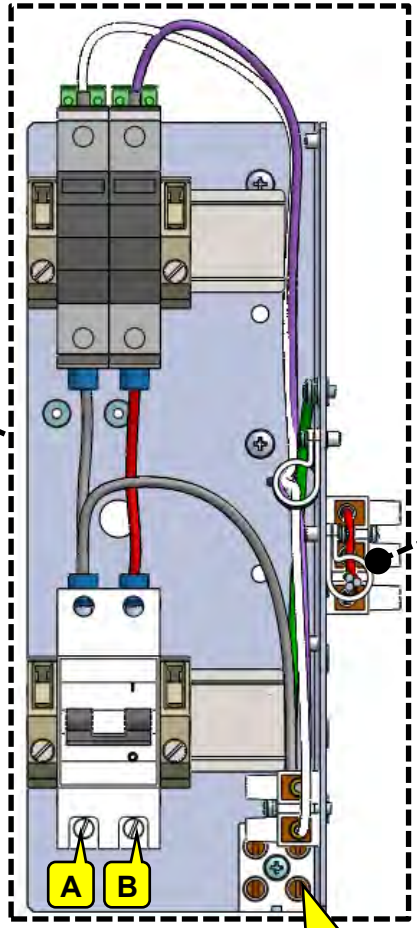

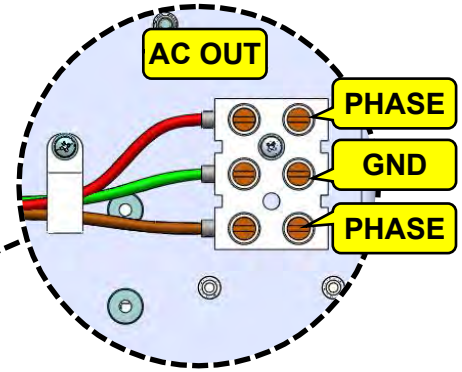

AUXILIARY AC CONNECTOR

MAX: 250VAC – 10A

USE PROTECTIVE DEVICES
(Circuit Breakers / Fuses)

AC MAINS INPUT

180 to 254VAC

43 to 63 Hz

AC MAINS	AC INPUT	
	A	B
M208	NEUTRAL	PHASE
B240	PHASE	PHASE

EC702MP / EC704MP

AC MAINS CONNECTIONS

4.2. Ethernet Connections

Connect between the switch module and Telesupervision Module, Exciter 1, Exciter 2, Control Module 1, Control Module 2.

Use Cat5 Cable whit RJ45 Connector.

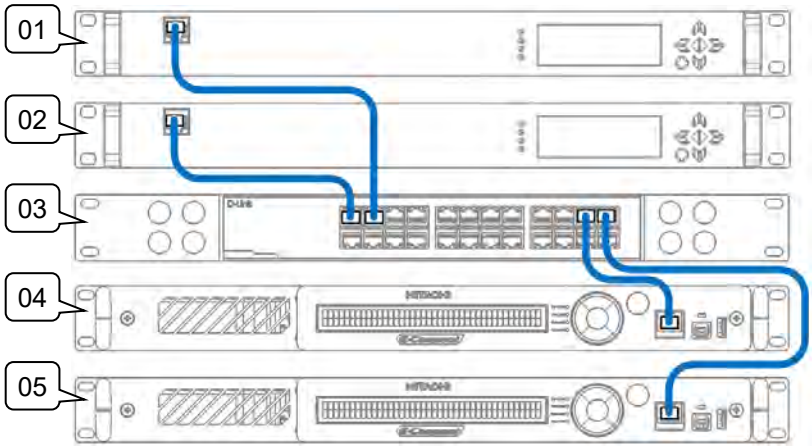

01	Main Exciter (Not Included)
02	Backup Exciter (Not Included)
03	Switch Module
04	Main Control Module Drawer – MOD GV 40056
05	Backup Control Module Drawer – MOD GV 40056 (Optional)

1. Connection between the switch module and CONTROL PORT connector of the transmitter top panel.
2. Connection between the switch module and the front Ethernet port of the CM8001 Controller A.
3. Connection between the switch module and the front Ethernet port of the CM8001 Controller B.

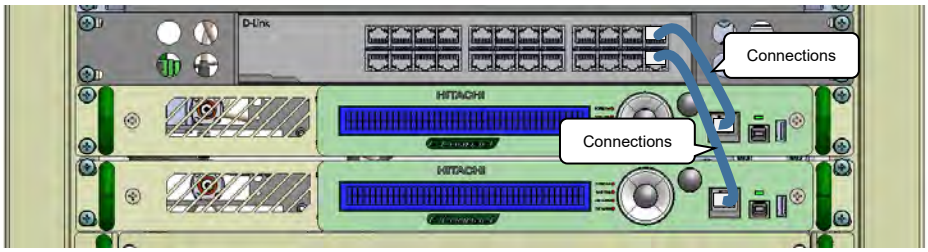

4.3. Internal Ground Connections

Connect the grounding mesh in the GND screw on the rear panel of each control module.

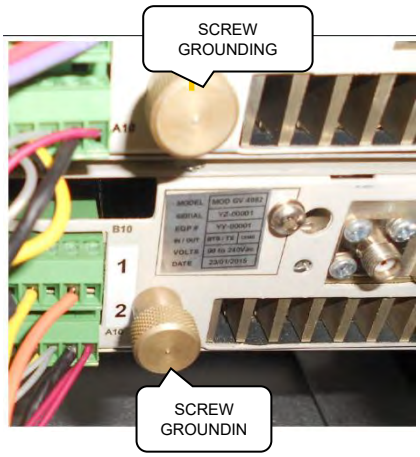

4.4. AC Electrical Line Connection

Prior to energizing the transmitter, one must make sure that the circuit breaker and the power switch (ON / OFF) are switched off or disabled..

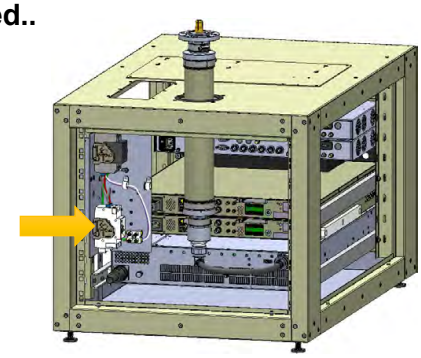

4.4.1. Electrical line connection (EC70xMP)

The Electrical Line is connected to the AC Unit:

Before Connecting the Machine to the AC Mains, one must ensure that the grid Voltage meets the equipment's settings. Any questions, please refer to Section 3 item 6.7. "AC Mains Protection Unit" of this manual.

Connection modes according to the Grid Voltage:

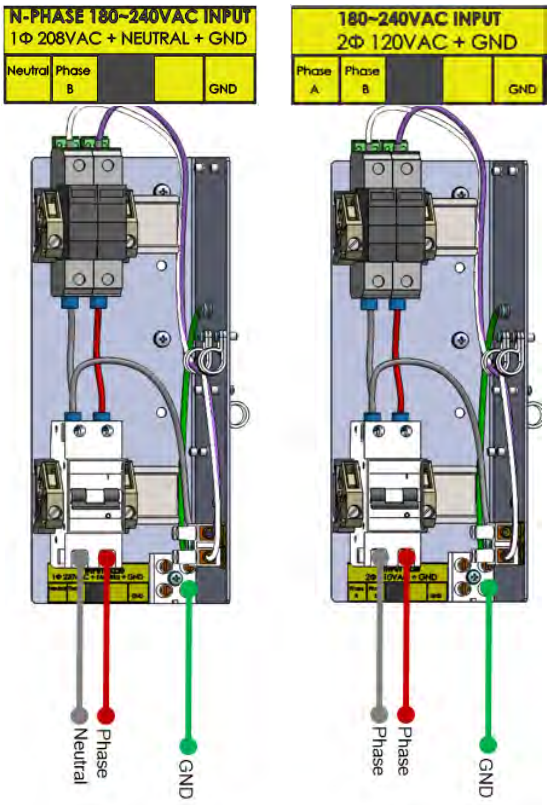

Never invert Neutral with Phase.

The screws must be properly tightened in order to avoid sparks.

Section 5 - Initial Activation

1. Overview.

After finishing the installation, the equipment is ready to be activated. It is important to observe that the transmitter is configured at the factory with the parameters that were supplied by the customer at the time he made the purchase, such as the channel output, power, MER, etc.

One should check the functionality and performance of the RF power, DC currents, temperature, alarms and communication.

Never turn on the equipment without connecting it to an Antenna or RF Load. May cause serious damage to the Equipment.

Firstly you must ensure that the general circuit breaker is off. Ensure that the all POWER ON / OFF button are in the OFF position off (all Drawers).

Make sure the Channel configured in the Exciter is the same as the Mask Filter and the antenna.

Check if the Antenna VSWR for the operating channel is better than -23dB of Return Loss.

Using a voltmeter, check that the AC Mains of the equipment is within its characteristics.

2. Activation.

The steps of this activation must be followed to avoid damage to the equipment.

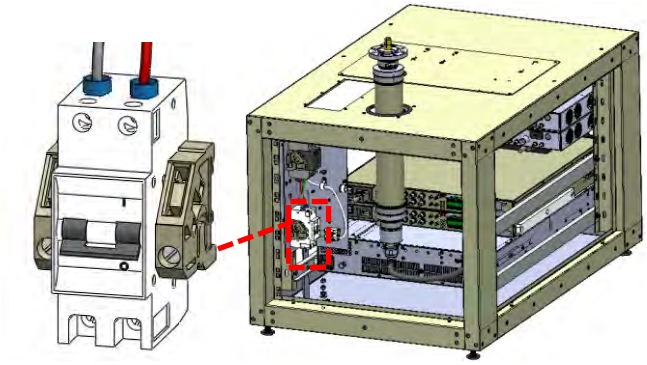

1st	Before Turn-On, Check if all on/off key Drawers it's "**off**"
2nd	Trigger the circuit breaker on (**01**)

MC8001 Display - Second Home Screen (Status)

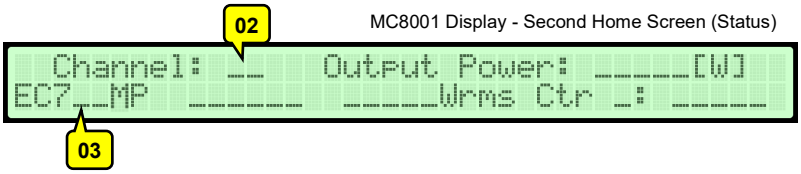

3rd	Check if both the Exciter (Main and Backup) are configured for the correct channel, the same as the Mask Filter and the Antenna.
4th	Check if both the Module Control CM8001 (Main and Backup): Chanel is the same of the Exciter (**02**) The description of the Equipment is correct (**03**)
5th	Check if the Main Exciter and Main Module Control CM8001 are active.
6th	Check if the Programmed Power in Main Module Control CM8001 is 0 (ZERO) Watts: Display Interface *>Measurements [2000] > Power [2100] > Programmed Power [1/3]*

7th	Switch On the two Power Supplies (**04**) in the MOD GV 40226 Drawer
8th	Check the Drawer Communication Status. In the Main Module Control Display Interface: *>Measurements [2000] > Communications Status [2500]* Pxx = **OK**
9th	Check the **ALL** Power Supply and Current when 0 (Zero) Watts Transmitter FWD Power: In the Main Module Control Display Interface: *>Measurements [2000] > Drawers [2300] > Power Supply [2310]* Power Supply ≈ 45,5V *>Measurements [2000] > Drawers [2300] > Current [2320]* I ≈ 0,30A (for each PA)

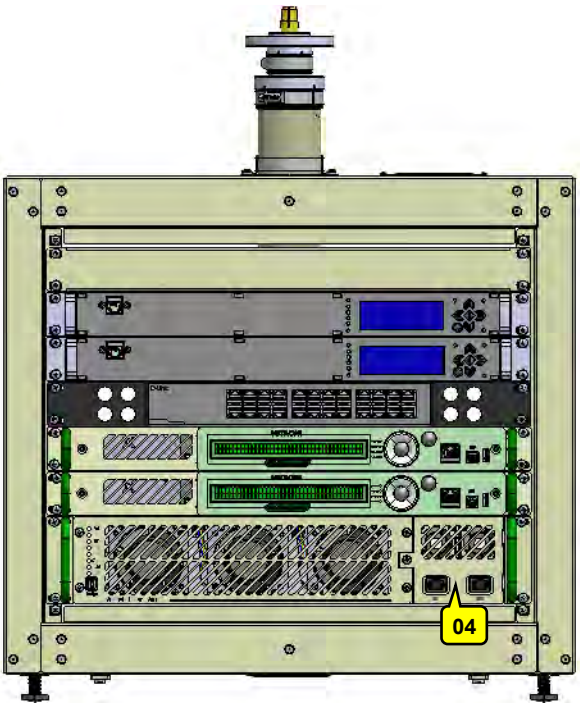

10th	Set the Programmed Power in Main Module Control CM8001 to **10%** of the total power of the equipment Display Interface *>Measurements [2000] > Power [2100] > Programmed Power [1/3]*
11th	Check: • Alarms Occurrences: *>System Alarms/Log [3000]> Current Alarms [3100]* No alarms • Reflected Power: *>Measurements [2000] > Power [2100] > Reflected [2/3]* The REF power must be less than 2% of FWD Power. • Check the ALL Power Supplies, Current and Temperature in the Power Amplifiers Drawers *>Measurements [2000] > Drawers [2300] > Power Supply [2310]* Power Supply ≈ 45,5V (all) *>Measurements [2000] > Drawers [2300] > Current [2320]* All must be of the same current value *>Measurements [2000] > Drawers [2300] > Temperature [2330]* Below 131°F (55 °C)
12th	Set the Programmed Power in Main Module Control CM8001 to **25%** of the total power of the equipment. Display Interface *>Measurements [2000] > Power [2100] > Programmed Power [1/3]* Repeat the check from 11th step.
13th	Set the Programmed Power in Main Module Control CM8001 to **50%** of the total power of the equipment. Display Interface *>Measurements [2000] > Power [2100] > Programmed Power [1/3]* Repeat the check from 11th step.
14th	Set the Programmed Power in Main Module Control CM8001 to **75%** of the total power of the equipment. Display Interface *>Measurements [2000] > Power [2100] > Programmed Power [1/3]* Repeat the check from 11th step.
15th	Set the Programmed Power in Main Module Control CM8001 to **100%** of the total power of the equipment. Display Interface *>Measurements [2000] > Power [2100] > Programmed Power [1/3]* Repeat the check from 11th step.

If there is an alarm during the power startup, It is advisable to zero the output power of the transmitter to seek the solution. Case contact the Technical HKL

Check if there is any abnormal or differential heating, in the connection joints between the transmitter, filter, antenna and adder's imbalance load. If there is any abnormal warming in an isolated way, this may indicate some flaw or imperfection in that connection. This must be checked before further increasing the transmitter power.

When operating under normal conditions, the modules located at the transmitter's rear may reach up to 55°C. This is due to the fan speed control, which is responsible for keeping the transistor's temperature at 60°C, as well as the presence of aluminum heatsinks and high thermal dissipation pallets. All passive devices are located at the rear panel and operate within the temperature ranges recommended by the manufacturer.

3. Main Operations.

3.1. Power Changing

The alteration of the transmitter power is something possible and accessible to the customer through the screen POWER SETUP ([1100]) by software navigation Menu in the digital display
See 5.1.4.2 Item in Control Module – System Structure

3.2. Communication

Ethernet Communication:
This equipment has a Web Page server accessed by the Ethernet port located on the front panel of the Module Control MC8001. Once the Control Module is connected to the Switch, this graphical interface can be accessed by connecting to one of the Switch ports.
Further details are described in **Section 6 - WEB Interface** of this manual.

USB Communication:
The communication of the digital exciter via USB port, is only possible with the use of the software GUI8001 (optional).

4. Forbidden operations

There are transmitter parameters which are configured at the factory, parameters defined on the purchase of the transmitter There are parameters that are set at the factory - and as previously noted, were provided at the purchase – which cannot the be changed.

- Channel
- Equipment Model

There are other parameters that are configured in the factory, but might be reconfigured using a password. The careful use of the password is to prevent unauthorized access that can cause the appearance of a reflected power at the transmitter and consecutively decreasing the value of the output power of the transmitter due to the protective action of the same.

5. Protections

5.1. Reflected Power

If the incidence of reflected power at the transmitter due to any external or internal factor occurs, refer to the measurement screen (MEASUREMENTS [2000]) by browsing the software's navigation Menu, according to instructions given in the Operation Section of the Digital Control System.
If the value of the reflected power exceeds the value of 2%* of rated power, the control will immediately signal Through the Current Alarm LED, and this will trigger the routine protection against reflected power. This will gradually decrease the value of the forward power until the amount of power reflected returns to less than 2% of rated output. At this time, the software returns to gradually increase the value of forward power, foreseeing the possible disappearance of the reflected power. Thus, the equipment will be oscillating between increase and decrease of the direct power around the power value that provides a reflected power of 2% of rated power, always seeking the return to the rated power of equipment.
The 2% value to generate the reflected power alarm is fixed, ie the alarm will always occur when the reflected power is 2% of the nominal power of the EQP. Already the reflected value that will make the EQP reduce direct power is configurable from 2 to 5%. To change this value, go to Setup Menu-> Alarms Mask-> Reflected and change as needed.

5.2. Over-excitation

If an excessive increase in the value of the excitation signal level occurs, the control, through the ALC, will interact with the exciter, to maintain a constant output power in it's rated value.

5.3. AC Mains Line Protection

Each piece of equipment has it's own independent power supply, all of which have equal protection features.

- Protection against short circuit
- Surge Protection

Basically, the surge protection on the network is performed by inserting the varistors between phases and between phase and earth, thus absorbing peak voltage, not allowing it to damage the power supply. Protection against short-circuit is carried out by monitoring the current in the output of the power supply. If the current exceeds a pre-set reference value, it will understand that the source output is shorted and should be disabled through the shutdown pin.

5.4. Transmitter Operating Temperature Configuration

The transmitter's operating temperature is measured on the power modules' transistors, and is configurable between 50°C e 60°C.

Configuration is done through the front panel Menu: Setup Menu "PA Temperature Control" (Setup Menu [1M00]).

This configuration varies according to room temperature and the transmitter's efficiency, and it is necessary to optimize operating temperature and equipment's lifespan.

This configuration shall be made when the equipment is activated following the procedure below:

1. With the transmitter running at operational power for at least 30 minutes, access the web or the PA USB interface to verify fan rotation.
2. Check fan rotation for all fans in the PAs.
3. Temperature adjustment must be done in order to obtain fan rotations between 5500 rpm and 6000 rpm.
4. If the highest rotation is below 5500 rpm, the temperature control has to be lowered. If it is above 6000 rpm, temperature control shall be raised.
5. Configure temperature at Setup Menu "PA Temperature Control". Lower or raise the temperature according to description in step 4 above. It is recommended that the procedure starts in steps of 2 °C.
6. Once configured, wait 5 (five) minutes until transistor temperature stabilizes.
7. Repeat steps 3 through 6 until fan rotation is within range (5500 rpm to 6000 rpm).

Section 6 - WEB Interface

1. Overview

The system configuration can also be performed by the Ethernet connection on Switch Module of this equipment. This interface enables the interaction between the system control and the user. In order to access the interface, a PC should be connected to the Ethernet port, using a UTP CAT5 with RJ45 connectors with standard EIA / TIA- 568- B, both connected to the Switch.

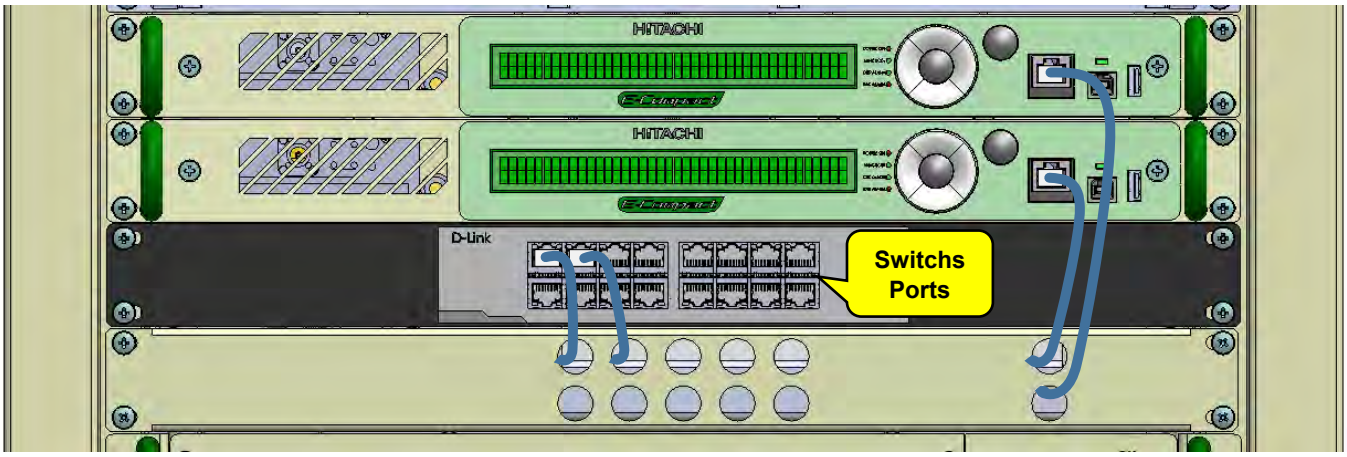

All of the equipment parameters such as: transmission power level, power supply measurements, alarm verification and all the possible functional selections may be accessed two different ways.

- ⇨ Frontal Panel – Through the frontal panel all of the equipment measurements and configurations may be accessed, as shown in the operation section.
- ⇨ Local or remote PC.

It is possible to change and/or monitor all of the parameters and measurements as is done at the frontal panel through the WEB server. To accomplish this it is necessary to configure the IP / Mask / Gateway.

If the multicast stream is on the same network that will be used for WEB interface access, a Managed PoE Ethernet Switch must be used to isolate this access from the multicast stream. For more information contact Hitachi Technical Assistance.

2. Configuring the System

The WEB interface can be accessed through the Main or the Backup Control ModuleCM8001 via a web browser through one of the IP addresses configured in the Control Module itself.

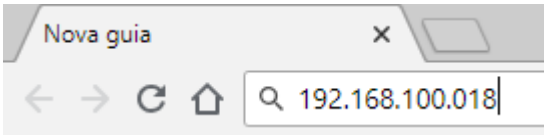

For navigation, you must use a recent internet browser, updated in its latest version. To control the device through the web interface, we recommend Chrome or Firefox Browsers,.

To configure the IP address, use the display navigation interface of the Control Module by accessing the [4000] Remote Access Menu.

Default Configurations:

Main Control Module MC8001:

IP Address	192.168.100.018
Subnetwork Mask	255.255.255.0
Gateway	192.168.100.001

Backup Control Module MC8001:

IP Address	192.168.100.019
Subnetwork Mask	255.255.255.0
Gateway	192.168.100.001

3. Browsing the System

3.1. Access Password

Enter the password, login and confirm.
Setup in factory:
Login : user
Password : linear

3.2. Startup

The equipment management interface is subdivided into six (6) tabs as shown below:

- ⇨ Alarms – Verification of existing alarms (System Alarms).
- ⇨ Setup – Power Setup, import and export files.
- ⇨ Measurements – Verification of system measures.
- ⇨ Power – Check the power supply voltage measurements, current and module temperature amplifier.
- ⇨ Remote – Change system settings (IP Address/ Netmask/ Gateway).
- ⇨ User – Change / configure password (Current Password/ New Password/ Confirm New Password).

3.3. Alarms

Through Alarms interface, it is possible to monitor alarms detected in the transmitter. If there are alarms the Alarms tab will flashing in red to access another tab.

3.3.1. Alarms

Shows the alarms that are occurring

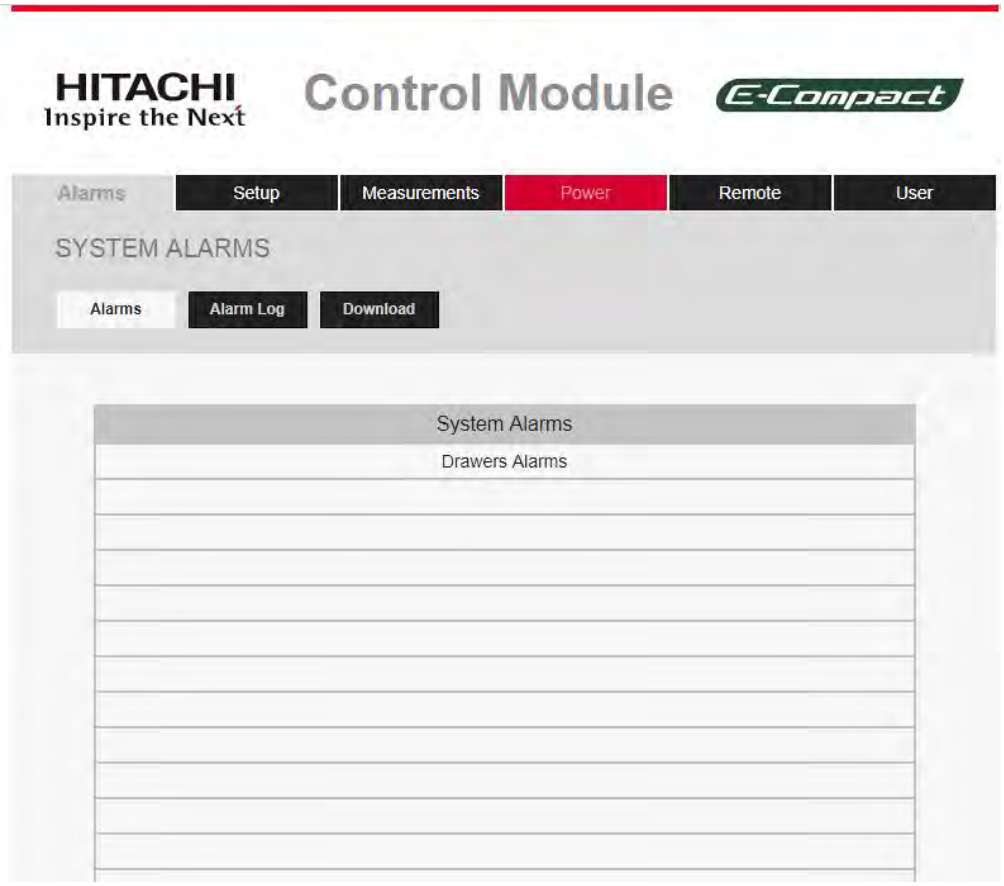

3.3.2. Alarm Log

View the list of alarms that ran during the Machine operating period.

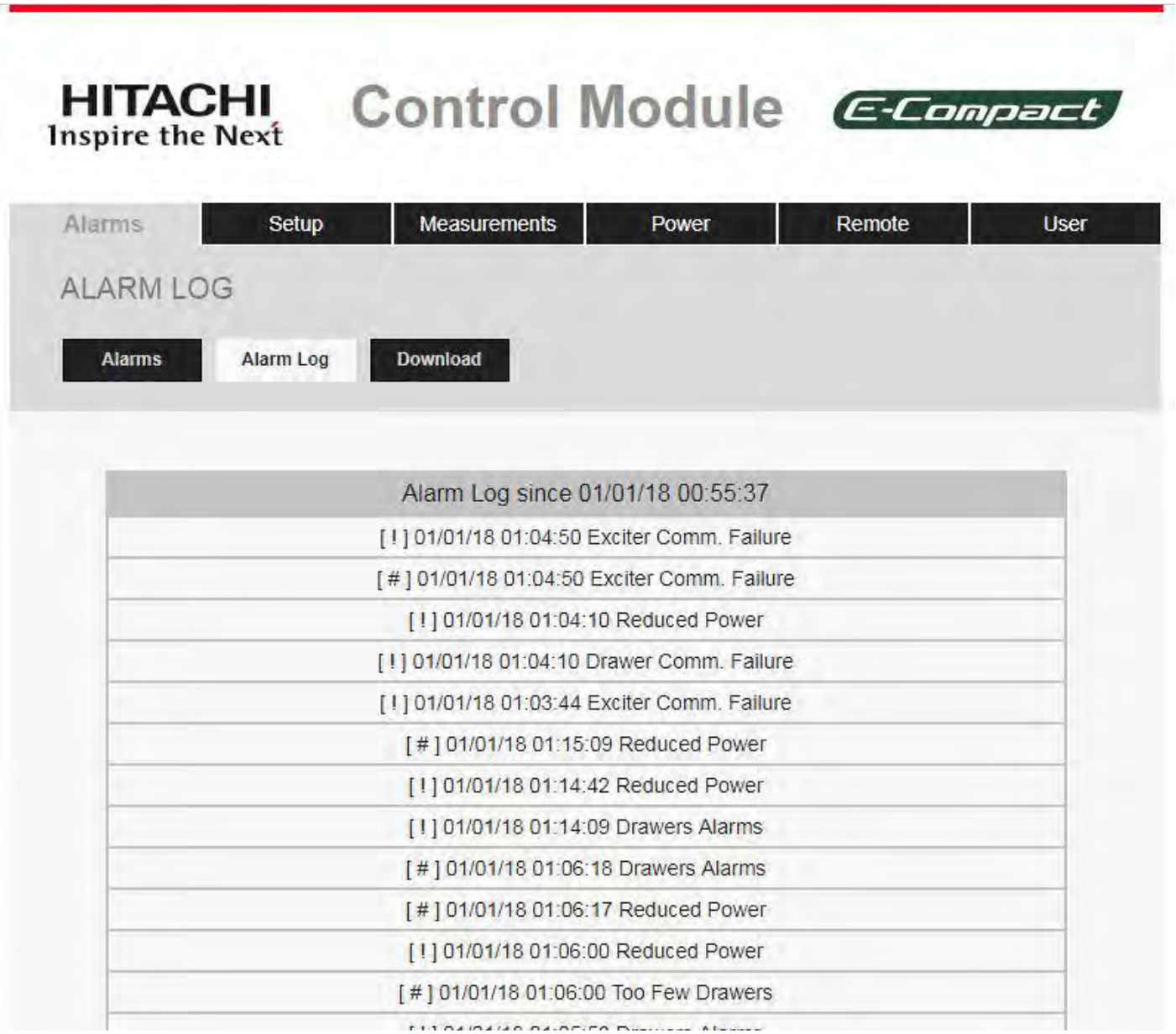

The symbol '[!]' before log indicates the date and time when the alarm occurred are recorded.
The symbol '[#]' before the log indicates the date and time when the alarm stopped to happen are recorded.

3.3.3. Download Alarm Log

Through this screen you can save the list of alarms generated for further analysis. To save the file, click the right button Download.

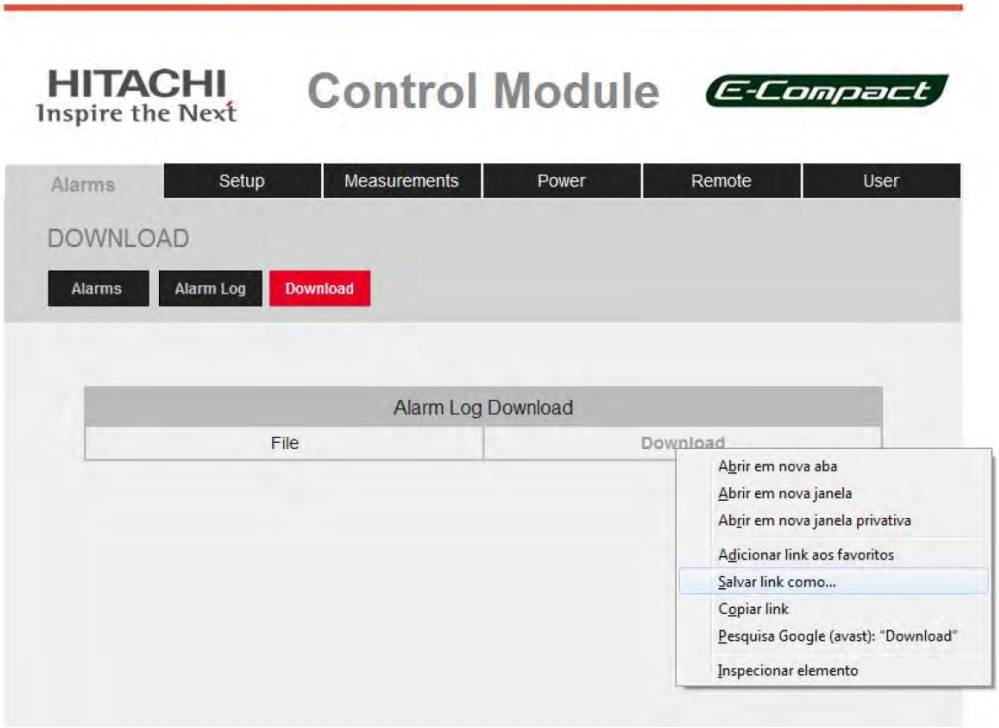

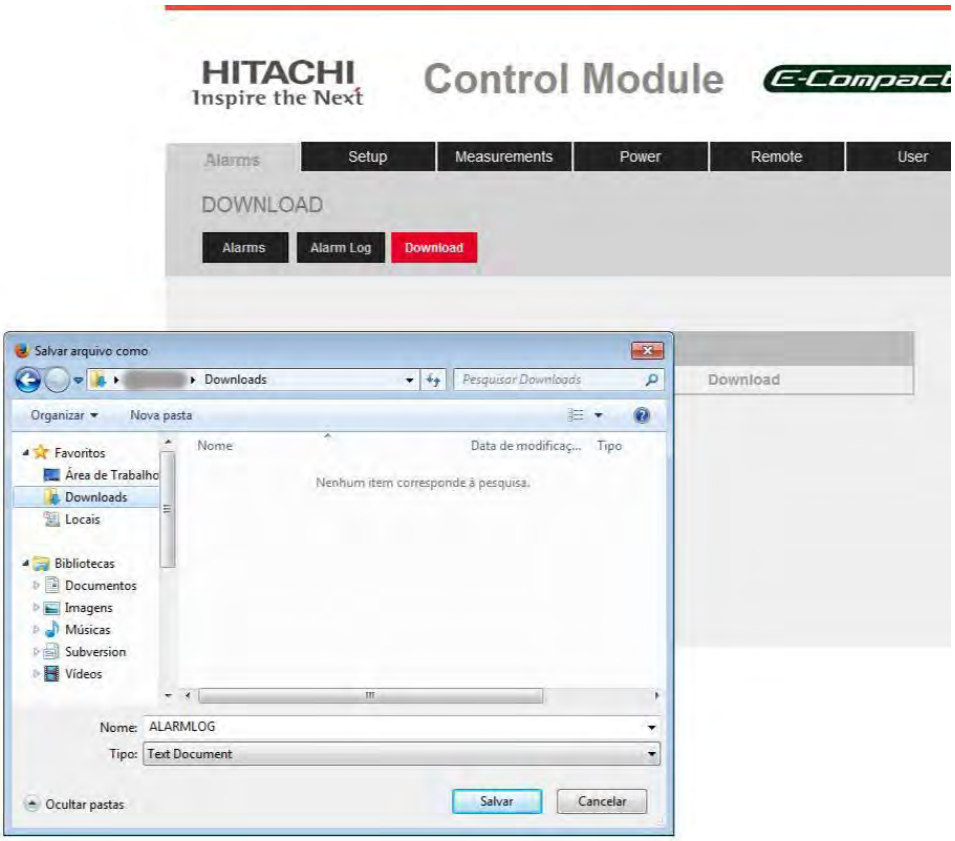

3.4. Setup

To set the power level of the transmitter, it is necessary to access the item “Setup” starting from the home screen.

3.4.1. Power Setup

Changes the output power of the Equipment.

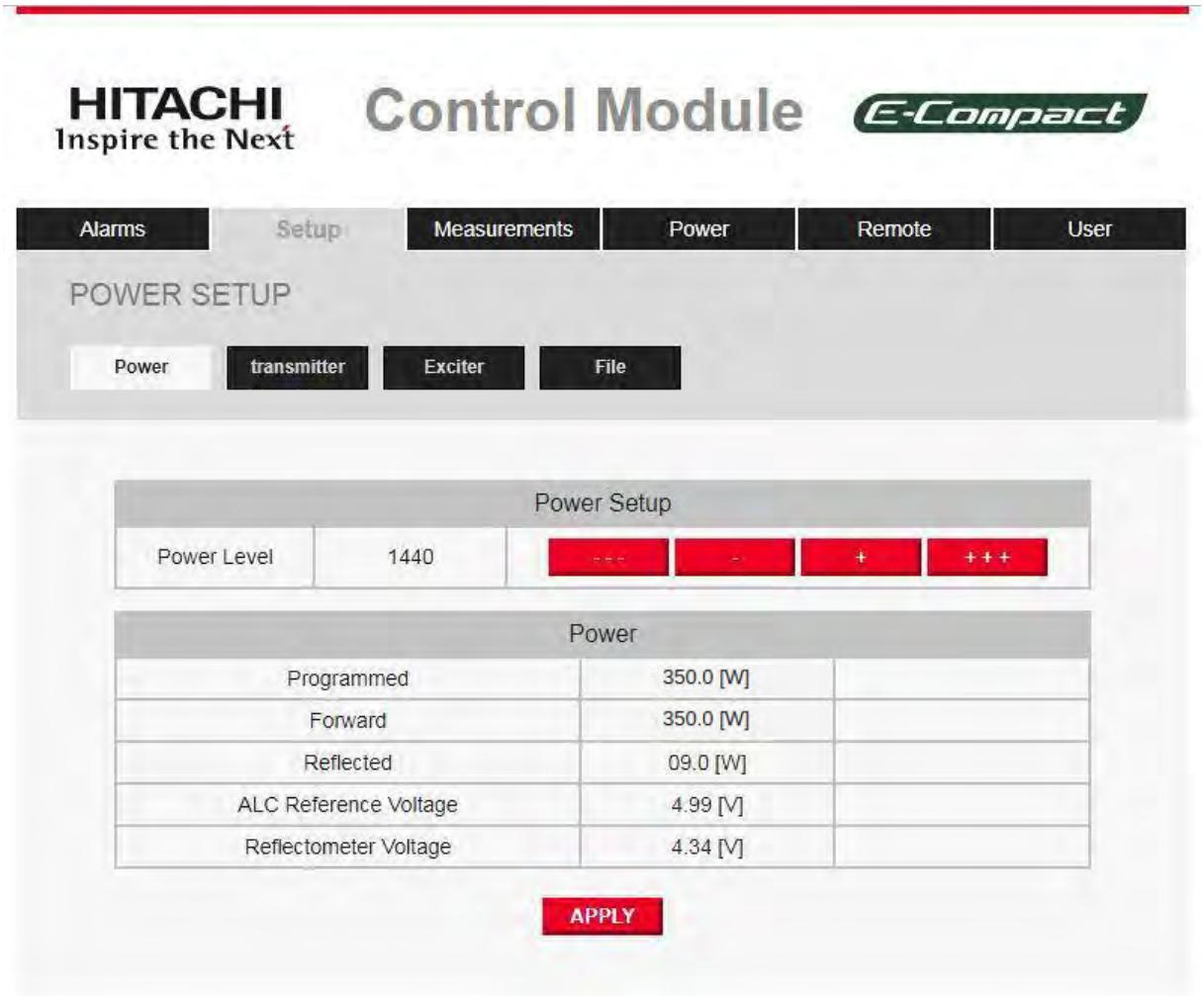

3.4.2. Transmitter

This screen allows you to restart the transmitter.

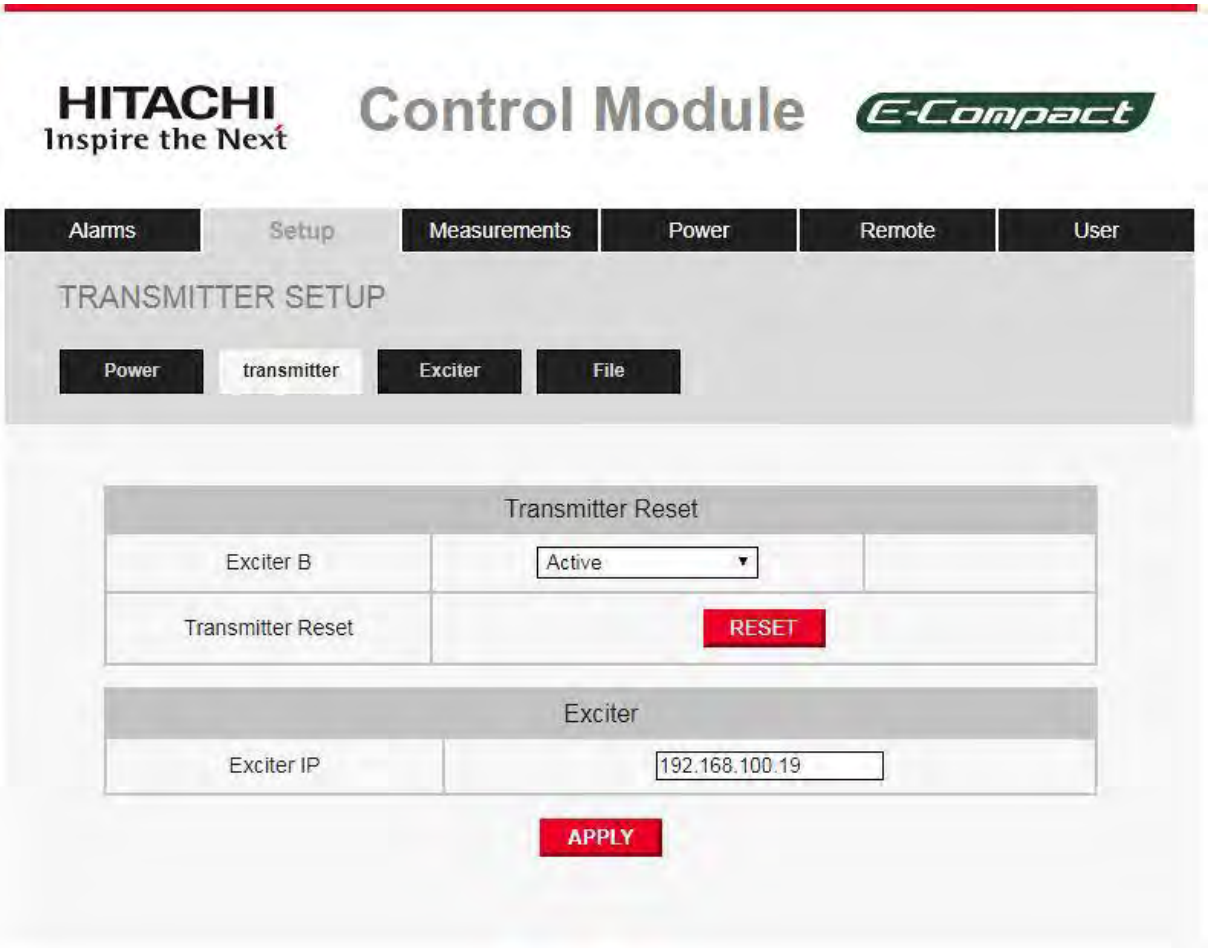

3.4.3. Exciter

CM8001 is a control Module, the Exciter is installed by the customer. One should always check the third party exciter's manual for remote access.
This menu has no functionality.

3.4.4. File

Because it is only the MC8001 Control Module, the Exciter is installed by the customer.
For upload Transistor Bias Adjustments or Power Sensor Call, recommend that you check your Customer Exciter manual for remote access.

This menu has no functionality.

3.5. Measurements

This screen displays information:
System identification, standard, channel and equipment, model, software versions and hardware, programmed Power, direct and reflected; ALC voltage; Status of the voltages source of digital exciter; communications status and status of the voltages of system.
To access it, just select the Measurements item.

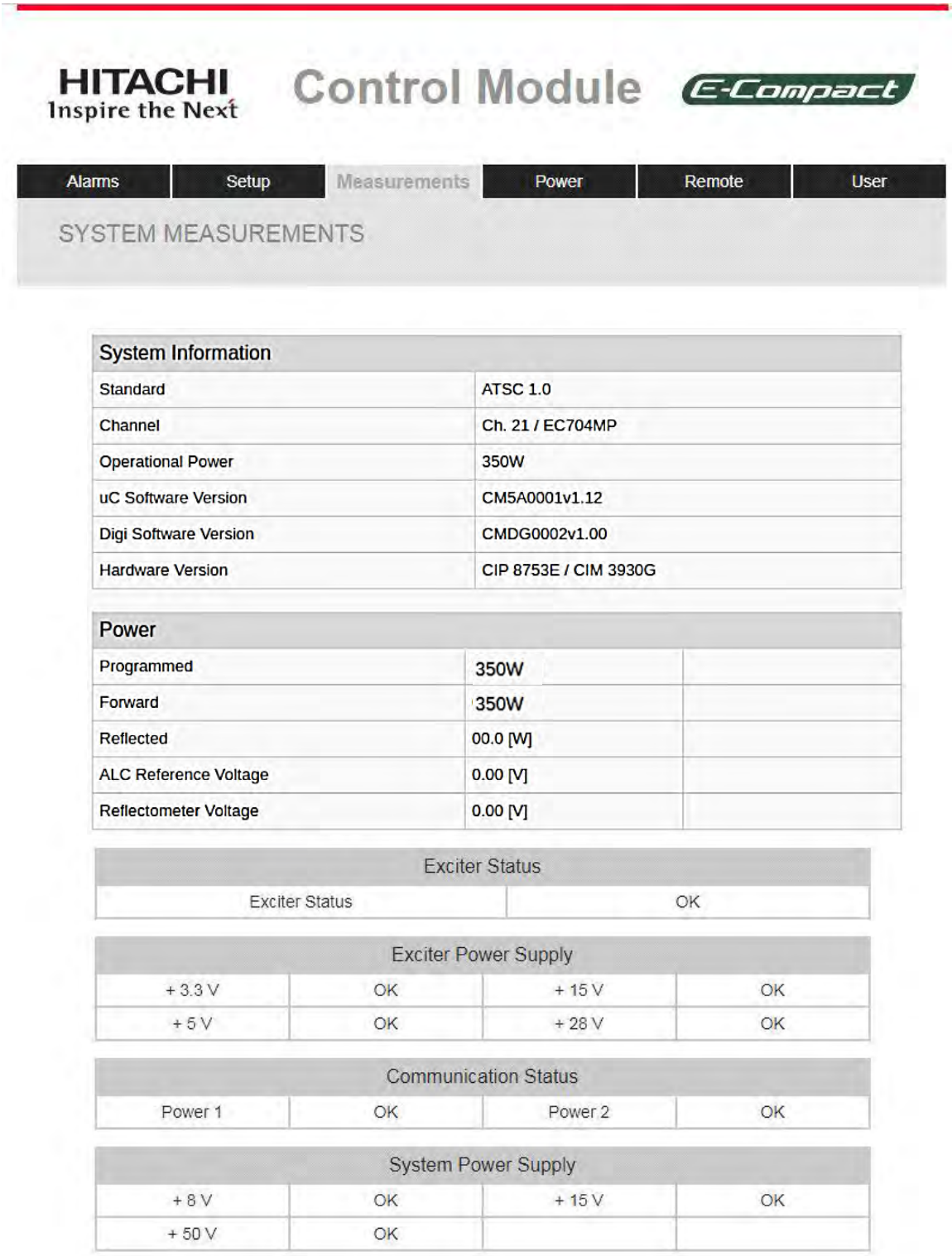

System Information	
Standard	ATSC 1.0
Channel	Ch. 21 / EC704MP
Operational Power	350W
uC Software Version	CM5A0001v1.12
Digi Software Version	CMDG0002v1.00
Hardware Version	CIP 8753E / CIM 3930G

Power		
Programmed	350W	
Forward	350W	
Reflected	00.0 [W]	
ALC Reference Voltage	0.00 [V]	
Reflectometer Voltage	0.00 [V]	

Exciter Status	
Exciter Status	OK

Exciter Power Supply			
+ 3.3 V	OK	+ 15 V	OK
+ 5 V	OK	+ 28 V	OK

Communication Status			
Power 1	OK	Power 2	OK

System Power Supply			
+ 8 V	OK	+ 15 V	OK
+ 50 V	OK		

3.6. Power

3.6.1. Measurements

This screen allows one to view power drawer information. To verify this information, select Power on the home screen.

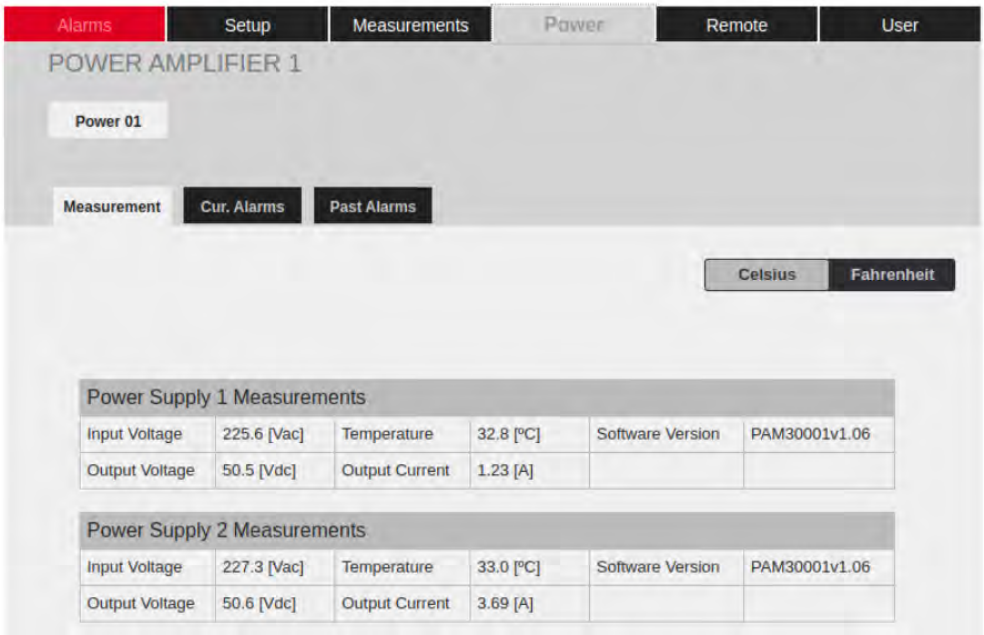

3.6.2. Cur. Alarms

Visualize the alarms that are occurring of the Power Amplifiers Drawer.

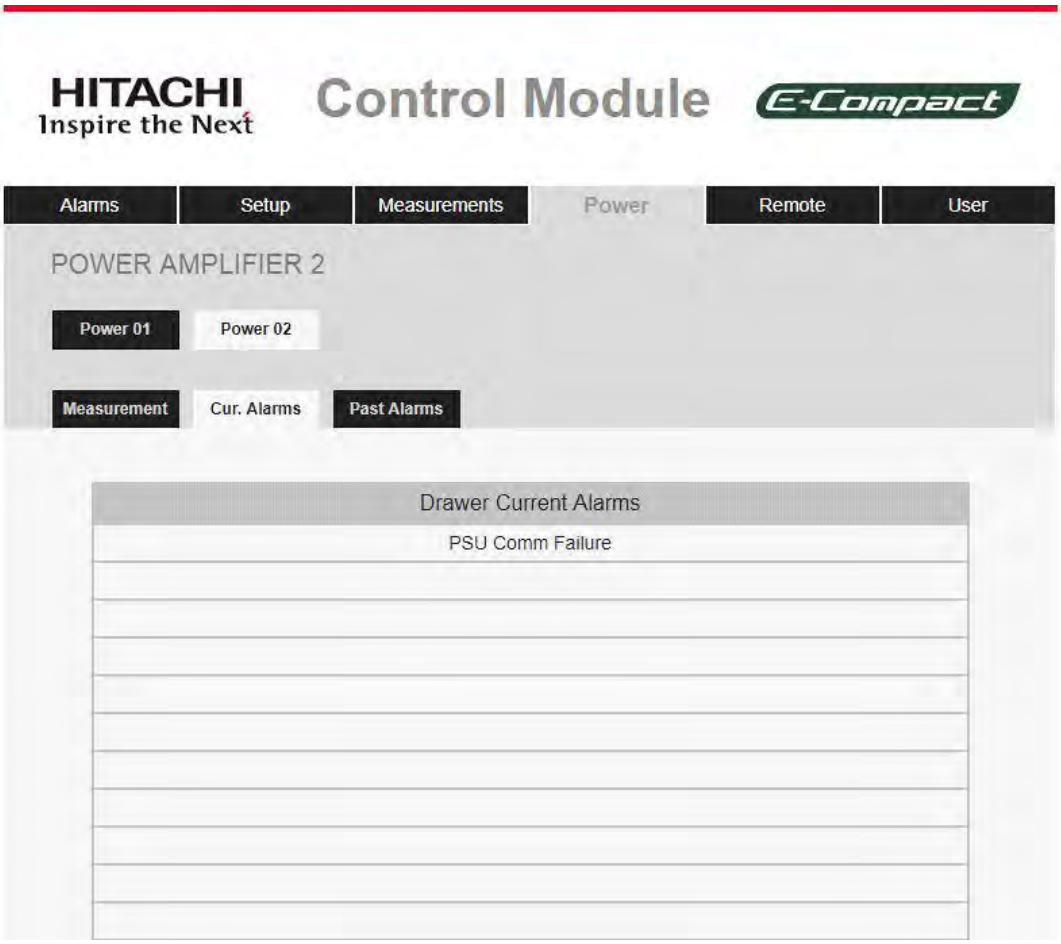

The alarm significance table is found in Section 5.1.4.2 - System Structure of Section 3.

3.6.3. Past Alarms

View the list of alarms that ran during the Power Amplifier Drawer operating period.

3.7. Remote

This screen allows to read system information and configure the machine for operation in remote mode. Through this configuration, it can be monitored all parameters and measures as well as from the front panel through the WEB server. To do this it is necessary to configure the IP / Mask / Gateway selecting the Remote option.

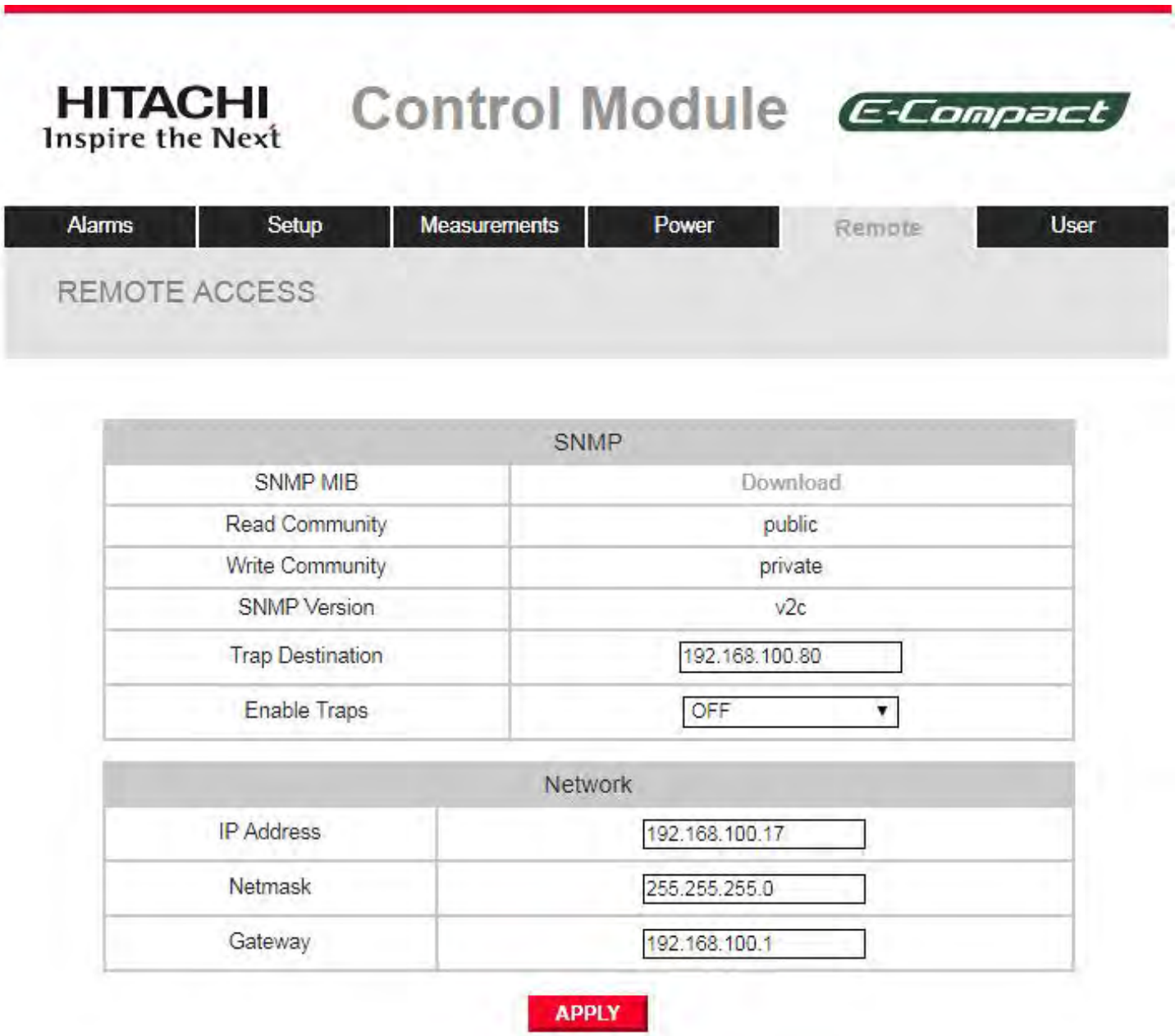

3.8. User

Through the User interface is possible to change the password. To access it, select the User item.

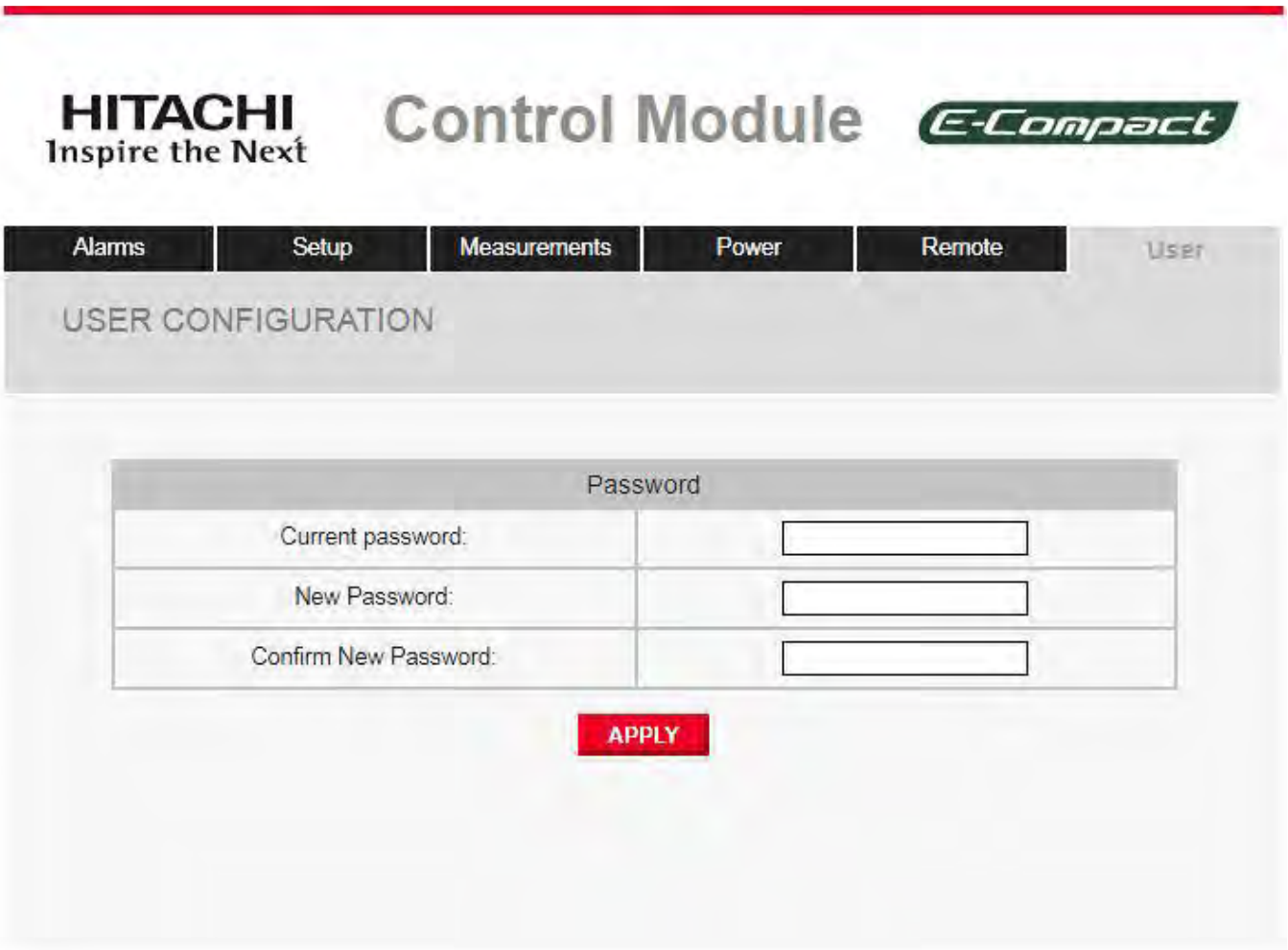

Current password: Field for entering the current password system.
New Password: It allows the user to enter the new password.
Confirm New Password: It allows the user to type the new password for confirmation.

After the desired changes made, click the Apply button to apply the settings.

Section 7 – Preventive Maintenance

1. Overview

This section is dedicated to the necessary procedures for proper preventive, periodic and corrective maintenance in order to guarantee an TV transmitter that works properly and for a longer period of time.

Only trained and authorized people should be allowed to open the transmitter. The non-compliance of this item might result Warranty loss.

IMPORTANT:

- ⇨ The life expectancy of the equipment depends on its working conditions.
- ⇨ Environments with controlled temperature increase the life span of the components.
- ⇨ In the semester inspections, if there is a noise or an abnormal vibration in the fan located inside the equipment, it should be replaced. This same procedure should be followed for the frontal panel fans in the power drawers or the excitation module.

2. Preventive Maintenance

2.1. Cleaning

Initial steps

- ⇨ Unplug the equipment from the power outlet,
- ⇨ Remove the side and top covers,
- ⇨ Disconnect all RF cables from the rear panel.

Procedure:

(1) With an air blower, remove all the accumulated dust from the inside of the equipment, in the front and rear panels, sides, superior and inferior covers.
(2) Clean the panels and the measurement instruments with a dry and soft cloth.
(3) Remove the dust from the input of the air filters located in the inferior panel, side and rear covers.

Do not allow any kind of particles or dust to get in to the filter cavities.

(4) If you can't use an air blower, use a brush with soft bristles to avoid scratching the equipment.
(5) When you are done cleaning the equipment, put the side covers back in place, redo all RF and power connections and turn the equipment on. Follow the activation procedure.

2.2. Visual Inspection

Remove the side covers.

(1) Verify if all the connections in the modules, as well as the RF connections in the equipment and the irradiant system are correct.
(2) Verify if there is water from rain coming through the RF cables or water dripping from the shelter's ceiling.
(3) Verify all the air inputs and outputs of the equipment to make sure they are not blocked.
(4) When you finish the visual inspection, put the side covers back.

2.3. Reading Verification

Make all the possible measurements through the instruments and take notes of the results. Compare the obtained results with the quality control sheets, which come with the equipment. The monthly verification of these measurements helps to prevent any abnormality that may occur.

Section 8 - Attachments

1. USA AC Mains Types for E-Compact Series

Common Electrical Services

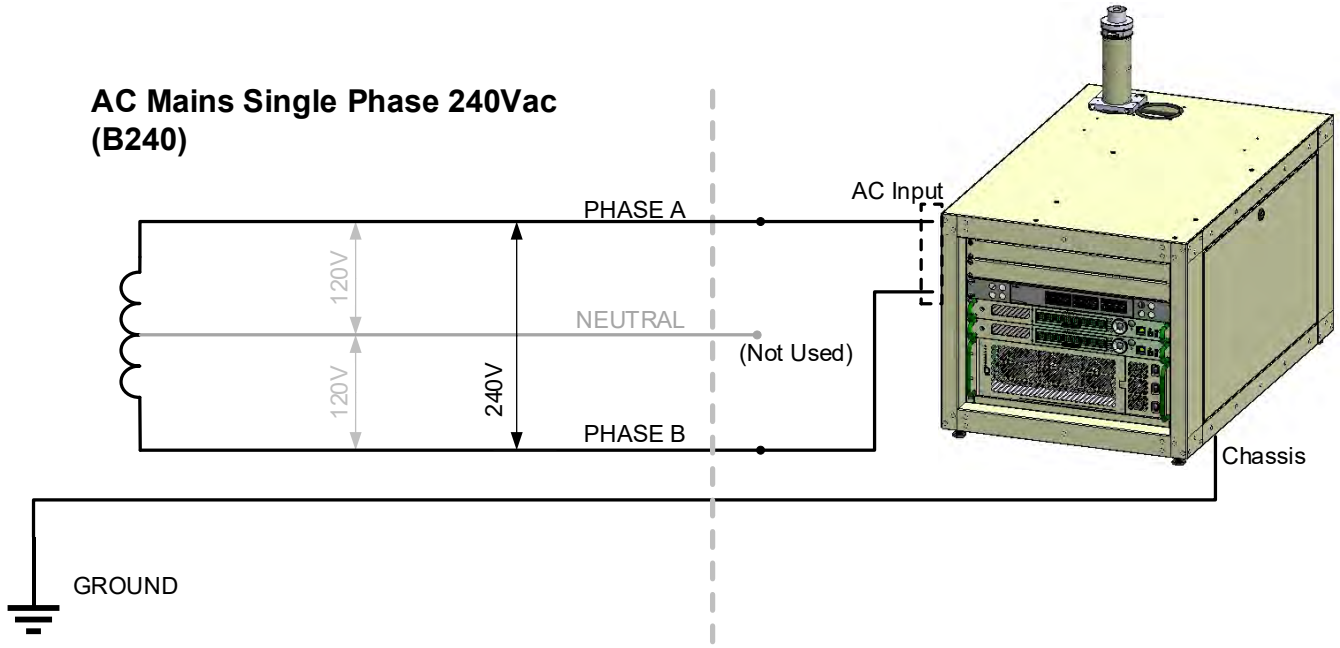

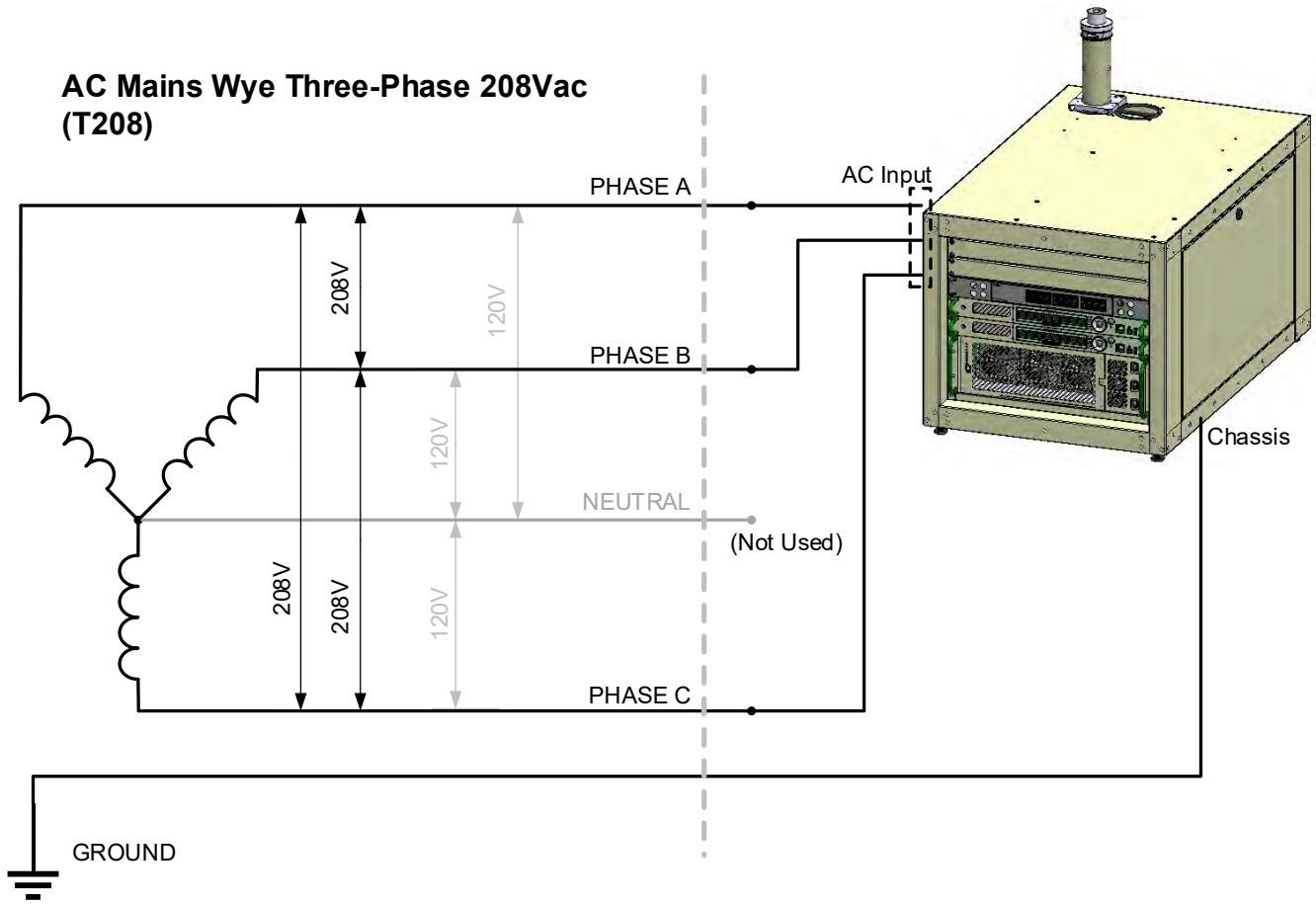

Uncommon Electrical Services

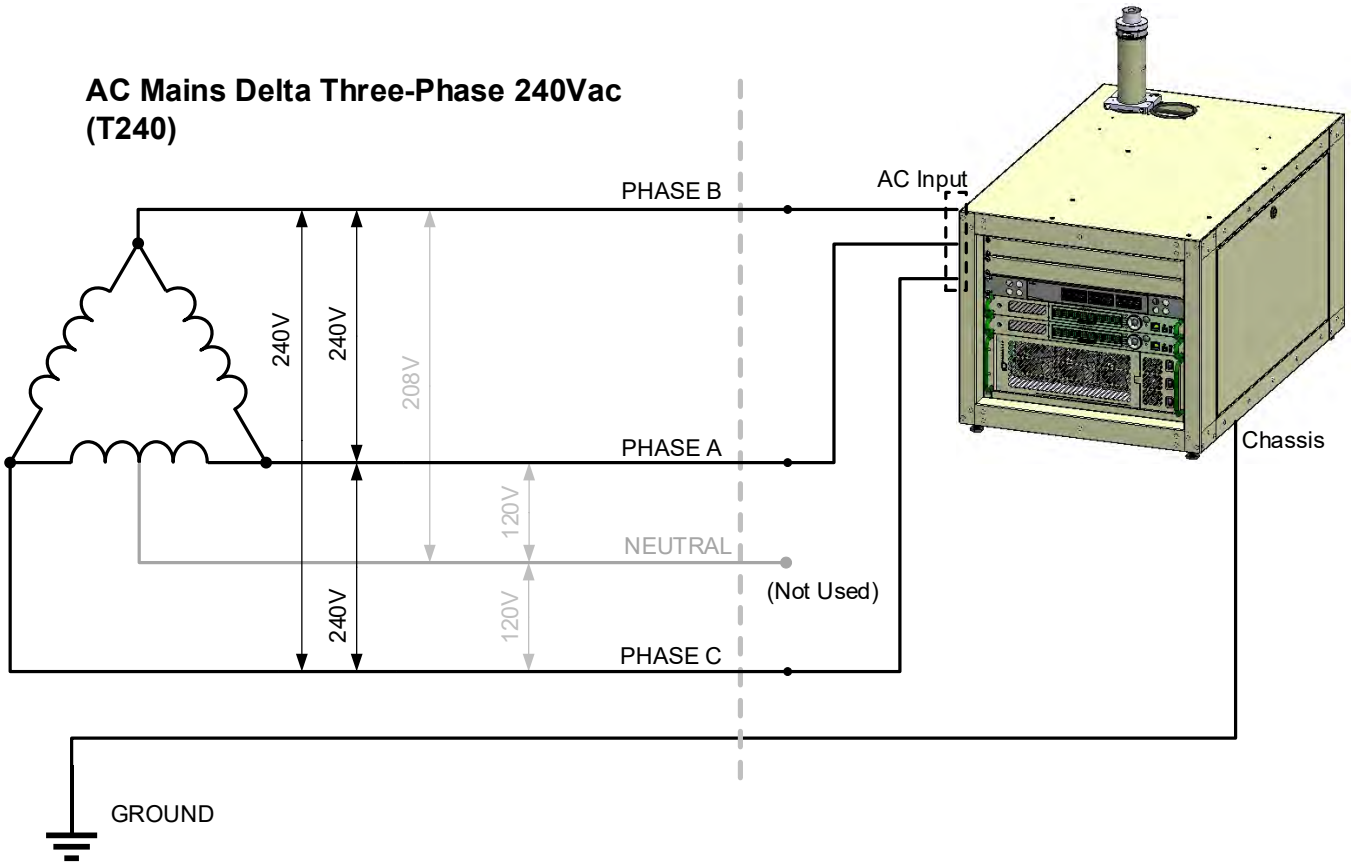

AC Mains Single Phase 208Vac Wild Leg (M208) - using Delta Three-Phase 240Vac

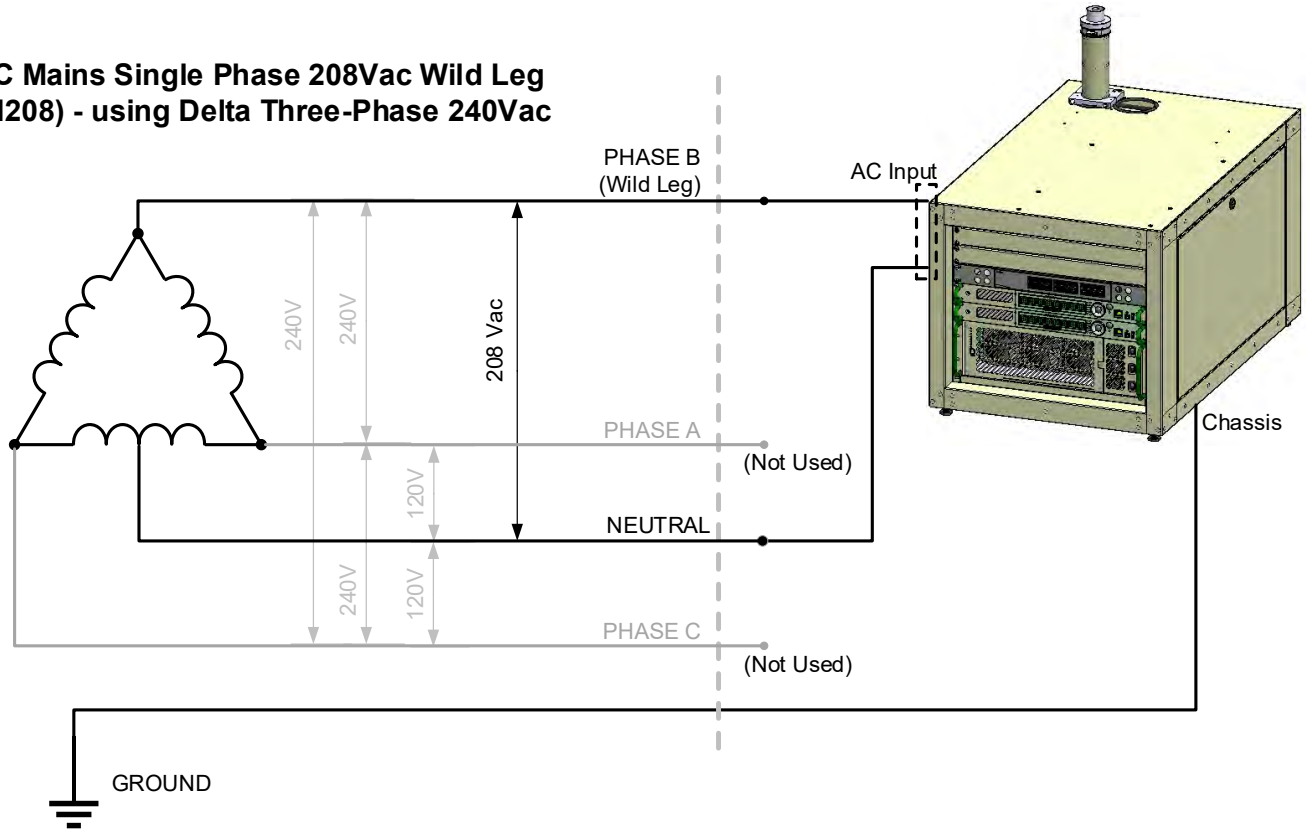
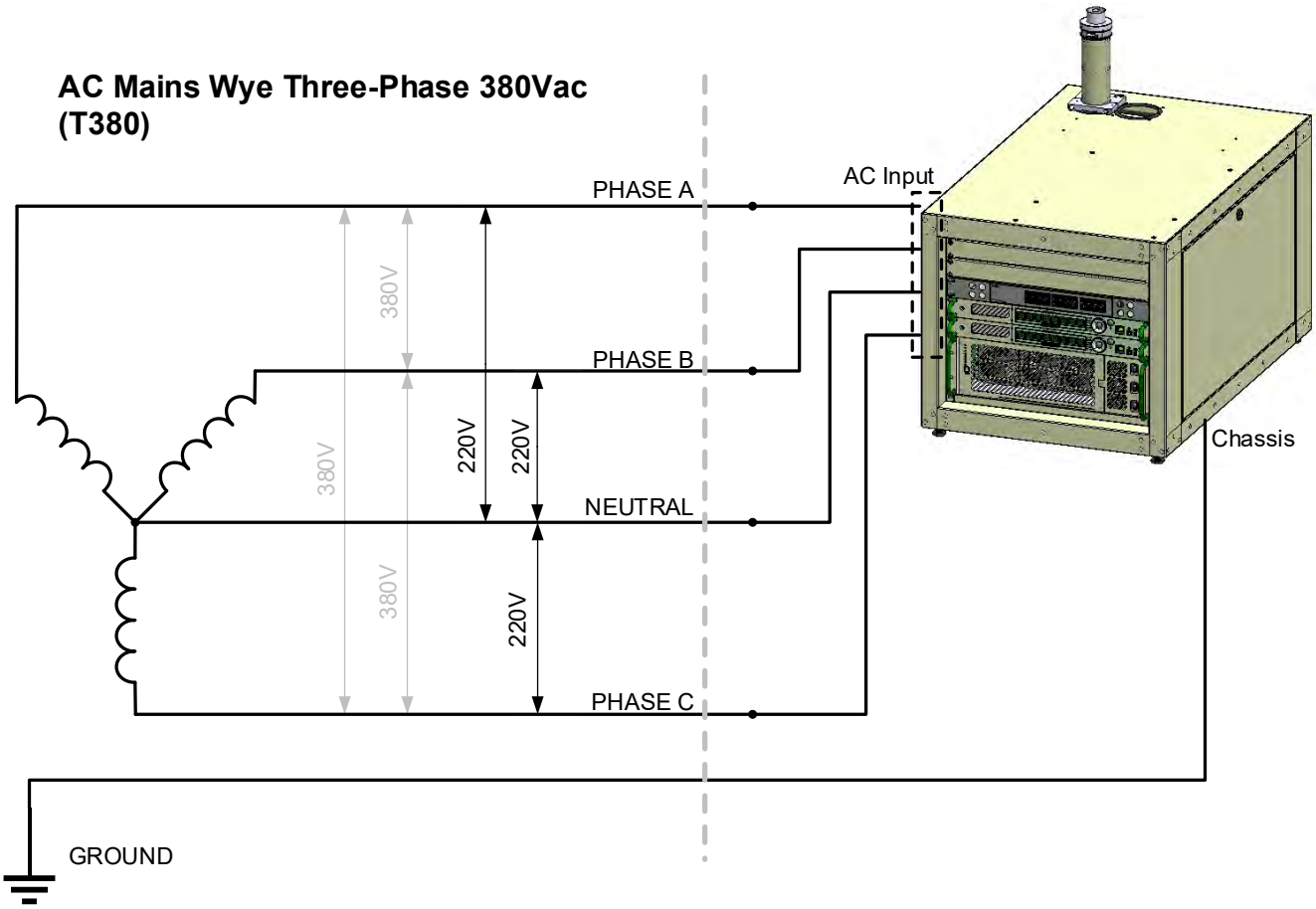
AC Mains Wye Three-Phase 380Vac (T380)