ELTA

USER'S HANDBOOK

USER'S HANDBOOK
INCLUDING INSTALLATION MANUAL
AND LOG BOOK

SERIAL NUMBER LABEL

EMERGENCY LOCATOR TRANSMITTER
MODEL ADT 406 AF / AP
IN THE COSPAS / SARSAT SYSTEM

Issued by

ELTA
F6614
14 Place Marcel Dassault
31702 BLAGNAC
France
www.elta.fr

ELTA

USER'S HANDBOOK

LIST OF UPDATES

UPDATE No.	ISSUE	INSERTION		UPDATE No.	ISSUE	INSERTION	
		DATE	BY			DATE	BY
A	INITIAL	Jun 30/02	C.CRESP				
B		Apr 30/03	E.LABRIFFE				
C		Jul 30/03	E.LABRIFFE				

PAGE INTENTIONALLY LEFT BLANK

LIST OF EFFECTIVE PAGES

CHAPTER/ SECTION	PAGE	DATE
TITLE PAGE		Jul 30/03
LISTE OF UPDATES	1	Apr 30/03
	2	BLANK
LIST OF EFFECTIVE PAGE	3	Apr 30/03
	4	BLANK
TABLE OF ILLUSTRATIONS	5	Jun 30/02
	6	BLANK
LEADING PARTICULARS	7	Jun 30/02
	8	BLANK
TABLE OF CONTENTS	9	Jun 30/02
	10	BLANK
	11	Jun 30/02
	12	Jun 30/02
	13	Jun 30/02
	14	Apr 30/03
	15	Apr 30/03
	16	Apr 30/03
	17	Apr 30/03
	18	Jun 30/02
	19	Apr 30/03
	20	Apr 30/03
	21	Apr 30/03
	22	Apr 30/03
	23	Jul 30/03
	24	Jun 30/02
	25	Apr 30/03
	26	Jun 30/02
	27	Apr 30/03
	28	Apr 30/03
	29	Apr 30/03
	30	Apr 30/03
	31	Jun 30/02
	32	Jun 30/02

CHAPTER/ SECTION	PAGE	DATE
Appendix A	1	Apr 30/03
	2	Apr 30/03
	3	Apr 30/03
	4	Apr 30/03
	5	Apr 30/03
	6	Apr 30/03
	1	
Appendix B	2	Jun 30/02
	3	Jun 30/02
	4	Jun 30/02
	5	Jun 30/02
	6	Jun 30/02
	7	Jun 30/02
	8	Jun 30/02
	9	Jun 30/02
	10	Jun 30/02
	11	Jun 30/02
	12	Jun 30/02
	13	Jun 30/02
	14	Jun 30/02
		Jun 30/02

PAGE INTENTIONALLY LEFT BLANK

TABLE OF ILLUSTRATIONS

	Page
Figure 1 : COSPAS/SARSAT - System Principle	12
Figure 2 : ELT ADT 406 AF / AP Presentation	14
Figure 3 : ELT ADT 406 AF / AP – Dimensions (Basic Configuration)	15
Figure 4 : Tolerances on the Axis for Installation of the ELT ADT 406 AF / AP	22
Figure 5 : Installation of the ELT ADT 406 AF / AP - Drilling Pattern Dimensions	24
Figure 6 : ELT ADT 406 AF / AP Installation - Wiring Diagram	25
Figure 7 : ELT ADT 406 AF / AP - Detailed Description	32

PAGE INTENTIONALLY LEFT BLANK

LEADING PARTICULARS

CAUTION 1 **:** ***THIS TRANSMITTER IS AUTHORIZED FOR USE ONLY DURING SITUATIONS OF GRAVE AND IMMINENT DANGER.***

CAUTION 2 **:** ***IT IS IMPERATIVE THAT EACH BEACON OWNER REGISTERS THEIR BEACON. CONTACT ELTA OR APPROVED AGENT TO OBTAIN THE INFORMATION RELATIVE TO THIS REGISTRATION.***

CAUTION 3 **:** ***THE BEACON MUST IMPERATIVELY BE PROGRAMMED WITH THE RELEVANT IDENTIFICATION AUTHORIZED BY THE LOCAL AIRWORTHINESS.***

CAUTION 4 **:** ***ONCE THE BEACON HAS BEEN PROGRAMMED, IT IS GENERALY ASSIGNED TO AN AIRCRAFT (NAME AND IDENTIFICATION). IF THIS BEACON IS USED ON ANOTHER AIRCRAFT IT WOULD HAVE TO BE REPROGRAMMED (NEW NAME AND IDENTIFICATION).***

CAUTION 5 **:** ***BEFORE INSTALLING OR USING THIS EQUIPMENT, THE VALIDITY OF THE INFORMATION ON THE BEACON LABEL MUST IMPERATIVELY BE CHECKED.***

PAGE INTENTIONALLY LEFT BLANK

TABLE OF CONTENTS

	PAGE
1. INTRODUCTION TO THE COSPAS-SARSAT SYSTEM	11
A. The COSPAS-SARSAT system	11
B. System organization	11
C. The distress frequencies	13
D. ELTA and the COSPAS-SARSAT system	13
2. GENERAL DETAILS OF THE ELT ADT 406 AF / AP	14
A. Purpose of the ELT ADT 406 AF / AP	14
B. Characteristics	16
3. DESCRIPTION OF THE ELT ADT 406 AF / AP AND OF THE AIRCRAFT COMPONENTS	18
A. General description	18
B. Detailed description	18
4. INSTALLATION OF THE ELT ADT 406 AF / AP	22
A. General	22
B. Installation of the beacon on the aircraft	22
C. External antenna installation	24
D. Remote control unit installation	24
E. Installation and configuration of the beacon	26
5. UTILIZATION OF THE ELT ADT 406 AF / AP	27
A. Automatic activation	27
B. Manual activation	27
C. Beacon shutdown	28
D. Beacon self-test	28
6. MAINTENANCE OF THE ELT ADT 406 AF / AP	30
A. Beacon self-test	30
B. Maintenance periodicity table	30
C. Battery replacement	30
D. Battery discarding	31
E. Test to do at the time of a beacon return in workshop	31

PAGE INTENTIONALLY LEFT BLANK

1. INTRODUCTION TO THE COSPAS-SARSAT SYSTEM

A. The COSPAS-SARSAT* system

The purpose of the COSPAS-SARSAT satellite system is to detect and locate all distress signals transmitted by aeronautical, maritime or land-based beacons, for the search and rescue organizations.

This program is the result of an international collaboration between the United States, Canada and France on the one hand (SARSAT project), and Russia on the other hand (COSPAS project). These two projects are fully compatible.

Since the first results were obtained several countries have joined the program. Several other countries have shown an interest and will soon be joining the COSPAS-SARSAT system partners.

ELTA in relation with CNES (French National Space Agency) has developed the complete range of products required for COSPAS-SARSAT system operation.

Following an in-depth study phase, ELTA has arrived at highly conclusive technical results, and experimental and operational use of the "ground" equipment have proven this equipment's reliability and ease-of-use.

B. System organization (Ref. Fig. 1)

In the COSPAS-SARSAT system, space equipment is placed on board several satellites in low near-polar orbit to capture transmissions from emergency transmitters and to retransmit these signals to specialized ground stations called **L**ocal **U**ser **T**erminals (LUT). These ground stations determine the position of the emergency transmitters and then retransmit the position data to the designated **M**ission **C**ontrol **C**enters (MCC). The MCCs in turn retransmit these data to the appropriate **R**escue **C**oordination **C**enters (RCC) so that they can start the search and rescue operations.

* COSPAS-SARSAT :
COSPAS = Kosmicheskaya Sistyema Poiska Avariynych Sudov
SARSAT = Search and Rescue Satellite-Aided Tracking

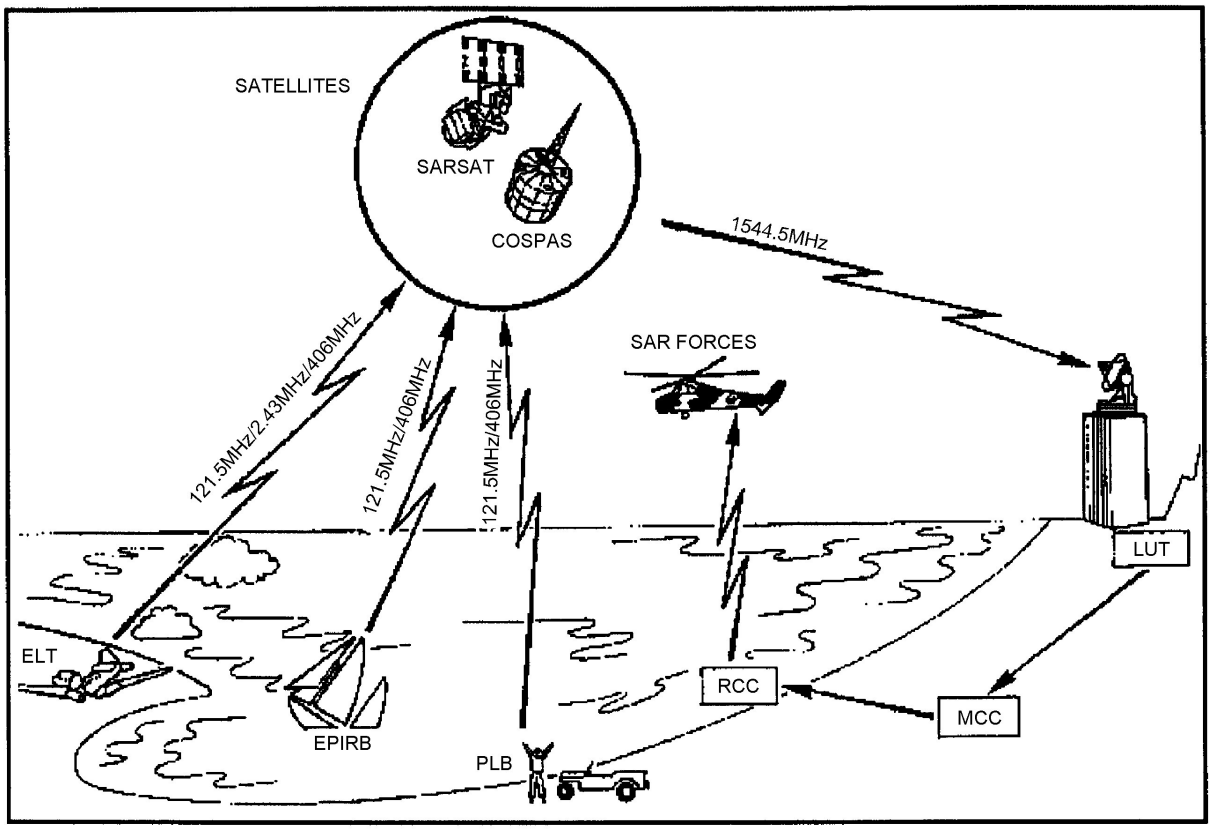

Legend :

ELT : **E**mergency **L**ocator **T**ransmitter
EPIRB : **E**mergency **P**osition **I**ndicating **R**adio **B**eacon
PLB : **P**ersonal **L**ocator **B**eacon
RCC: **R**escue **C**oordination **C**enters
MCC : **M**ission **C**ontrol **C**enters
LUT : **L**ocal **U**ser **T**erminals

COSPAS/SARSAT – System Principle

Figure 1

C. The distress frequencies

There are several advantages to using the 406 MHz frequency :

– Worldwide coverage: locating is not only possible in real-time within a radius of 2,500 km around the station, but also in global mode outside this zone since the satellites memorize the messages on the 406 MHz frequency. Location process uses Doppler effect.

– Locating accuracy: 2 km as opposed to 10 to 15 km in the 121.5 MHz or 243 MHz frequencies. It should be noted however that the 406 MHz beacons also transmit 121.5 MHz and 243 MHz signals which enable the final approach of the rescue teams in homing mode.

– Information reliability: the structure of the digital signal transmitted by these beacons makes it possible to be sure that there is actually a distress situation, as well as to identify automatically the mobile in distress which is vital for rescue operations.

– Unique identification: each beacon has it's own identification information.

D. ELTA and the COSPAS-SARSAT system

(1)406 MHz distress beacons:

These beacons transmit to the satellites a digital message which identifies them and gives their position, as well as a signal that facilitates the final approach of the rescue teams.

They are suitable for all types of use (maritime, aeronautical and land) and can, depending on the model, be activated manually or automatically. They are designed to function in the most extreme conditions with a high degree of reliability.

(2)Satellites low earth orbiting:

At least four satellites are permanently operational. Since their orbit is near-polar, in the worst case every point on Earth is overflown every two hours.

In a ground station's visibility zone, the satellites directly transmit the messages captured in that zone, and also any messages from the zones not covered that they have stored in memory.

(3)Geo-stationary satellites are now available in the system and offer faster detection capability (close to 5 minutes) but require a GPS receiver to supply location that is sent via C/S message.

(4)Ground reception stations:

The zone effectively covered (or visibility zone) is a circle with a radius of 2,500 km around the station. These stations receive (via the satellites) and process, in real time, the messages from the beacons activated in their visibility zone and, in batch mode, the messages from the 406 MHz beacons activated outside that zone and memorized by the satellites.

Automatic processing of the 406 MHz digital messages allows the beacons to be located and the carrier mobile to be identified.

2. GENERAL DETAILS OF THE ELT ADT 406 AF / AP

A. Purpose of the ELT ADT 406 AF / AP (Ref. Fig. 2)

The ELT ADT 406 AF / AP consists of a beacon that incorporates means of attachment.

The ELT ADT 406 AF / AP is designed to transmit a digital distress signal to satellites that are part of the COSPAS/SARSAT SYSTEM.

These satellites transmit the captured signal to the reception stations on the ground.

This signal is transmitted on the 406.028 MHz frequency and is used to precisely locate and identify the ELT ADT 406 AF / AP.

It also transmits a 121.5 MHz and 243 MHz signal to facilitate the final approach of the distress scene (homing).

It can be triggered manually or automatically by means of an acceleration sensor (G.switch in accordance to EUROCAE ED-62 standard).

This ELT meets the latest JAR OPS and ICAO recommendations.

Any encoding protocol defined by COSPAS/SARSAT can be used with ELT ADT 406 AF / AP including country code assignation.

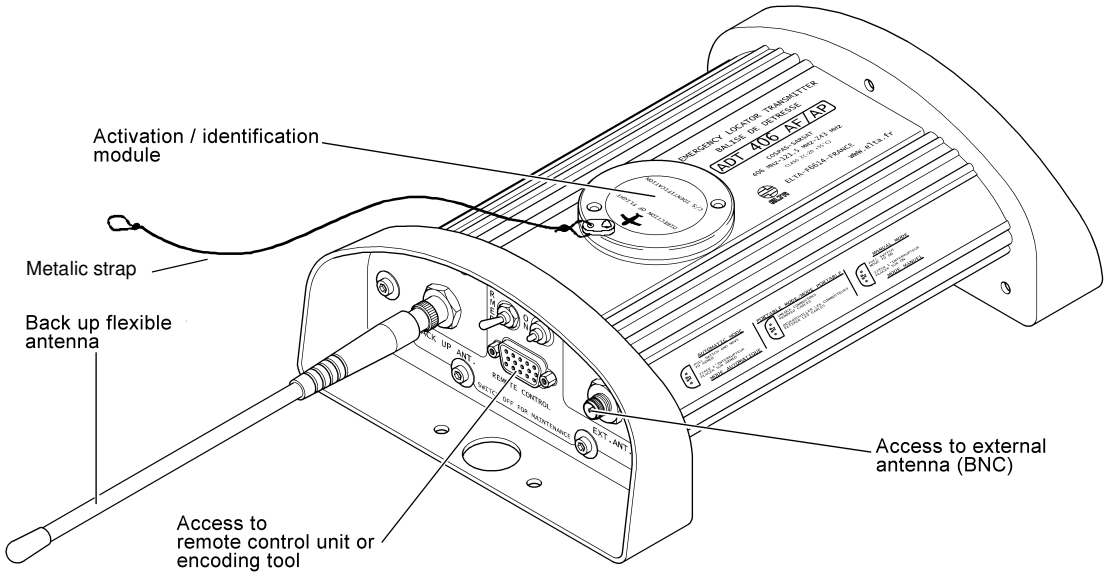

ELT ADT 406 AF / AP- Presentation

Figure 2

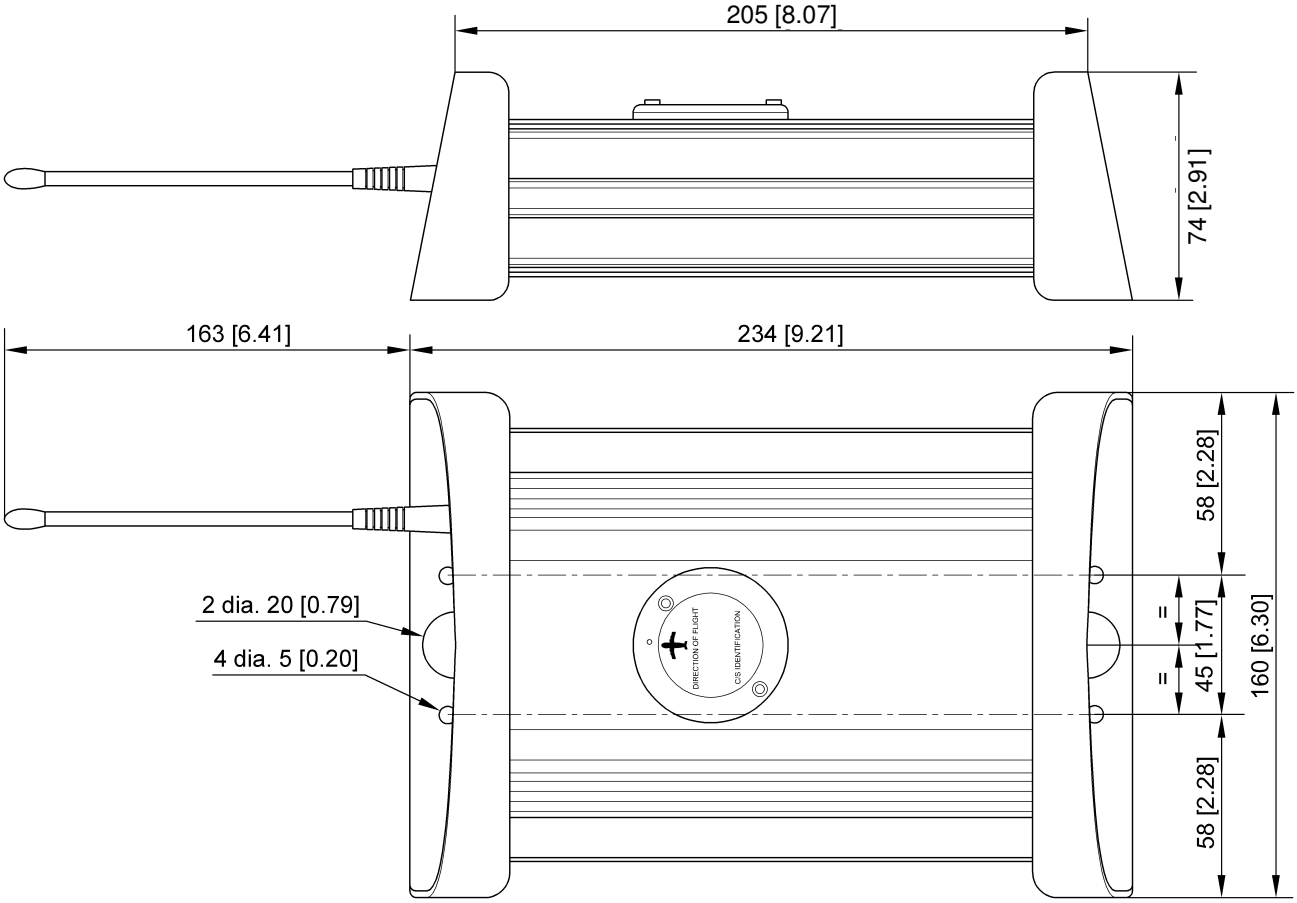

ELT ADT 406 AF /AP - Overall Dimensions
(Other Back Up Antenna Configuration Are Available)

Figure 3

B. Characteristics (Ref. Fig. 3)

(1)Approvals

ADT 406 AF / AP is COSPAS/SARSAT approved (TAC # 131, dated 15 July 2002, see Appendix A page 1)

ADT 406 AF / AP meets EUROCAE ED62 standard

ADT 406 AF / AP is JTSO 2C91a and JTSO 2C126 (JTSO N° F.O. 089 dated 03 Oct. 2002, see Appendix A page 2)

ADT 406 AF / AP is TSO C91a and TSO C126 (TSO letter dated Febuary 24 2003, see Appendix A page 4)

(2)Physical characteristics

Height : 74 mm
Width : 160 mm
Length : 234 mm (without back up antenna)

Weight : 1.6 kg maximum

Back up antenna lenght : 200 mm max

(3)General characteristics

(a)External antenna

- Omnidirectionnal three-frequency antenna 50Ω access,
- conform to COSPAS/SARSAT and EUROCAE ED-62 specifications.

(b)Power supply

High energy batteries (2 series-connected packs), activable for 5 years. Autonomy 24 hours on 406.028 MHz and greater than 60 hours at -20°C on 121.5&243 MHz.

- Voltage : 6 VDC,
- capacity : 10.5 A/h,
- ELTA type number :00E64191,
- lithium manganese dioxide (solid cathode),
- battery servicing kit available: 02N60052 kit for one ELT
  02N60053 kit for 10 ELT

(c)Radio-electrical characteristics

1 406 MHz satellite transmitter

- Frequency : 406.028 MHz,
- transmitter power : 5 W,
- modulation : "L" two-phase,
- transmission recurrence : 50 s,
- transmission duration : 440 or 520 ms.

2 Associated homing transmitter

- Frequency : 121.5 MHz/243 Mhz or 121.5 MHz (selectable),
- 121.5 MHz transmitter power : > 100 or 200 mW (selectable),
- 243 MHz transmitter power : > 100 or 200 mW (selectable),
- modulation : AM (3K20A3X type) from, 1600 Hz to 300 Hz, up to four periods per second,
- antenna gain : > 1 dBi.

(d) Environment characteristics

- Operating temperatures : -20°C to +55°C,
- storage temperatures : -55°C to +85°C.

(e) Miscellaneous characteristics

- Automatic activation level in accordance with EUROCAE ED-62 (internal G-switch, see Appendix A page 6).
  Activation direction is selectable (4 possibe directions),

- color : orange in conformity with the international distress signal,

- self-test : transmission of one burst modulated with inverted frame synchronization and 5s transmission of 121.5 MHz ,
  automation to off position (on remote control panel),

- any COSPAS/SARSAT protocol available,
  . ELT S/N
  . A/C operator designator and S/N
  . A/C 24 bits address
  . A/C nationality and registration marking (recommended)
  . Test
- any country code available,
- can operate in short or long C/S message.
  For long message, location data (from on board GPS as exemple) is received from A/C data bus through an optional interface module, P/N 01N6593(x),
- C/S identification stored in a transferable module to ease maintenance on ELT,
- dual antenna access. Primary for external antenna and secondary for permanent back up antenna in case of failure detection on primary access.

3. DESCRIPTION OF THE ELT ADT 406 AF / AP AND OF THE AIRCRAFT COMPONENTS

A. General description

(1) The ELT ADT 406 essentially consists of :

- an ADT 406 AF / AP beacon transmitter
- a back up antenna,
- labels,
- an activation / identification module

(2) The ELT ADT 406 AF / AP basic aircraft components consists of :

- a remote control unit,
- an external antenna.

B. Detailed description (Ref. Fig. 7)

(1) The ADT 406 AF / AP beacon

The ADT 406 AF / AP beacon mainly consists of :

- a power supply module,
- an electronic assembly,
- a mechanical assembly.

The front face of the electronic assy is equipped with the following components :

- a REMOTE CONTROL electrical SUB-D high density 15 pins female connector (7) for connecting up to the aircraft remote control panel or programming tools,
- a BACK UP ANT. TNC female connector (10) for connecting up the antenna,
- an EXT. ANT. BNC female connector (6) for connecting up the external antenna,
- an ARMED/OFF/ON lockable toggle switch (9) for activating the beacon,
- a TX indicator light (8) indicating beacon activation (real distress and self-test).

(2)The labels

(a)Identification label

This label indicates :

- beacon name, manufacturer details,
- the condition in which the beacon may be used (warning),
- approval number, identification, part number, service bulletin, serial number and conditions on the use of the beacon.

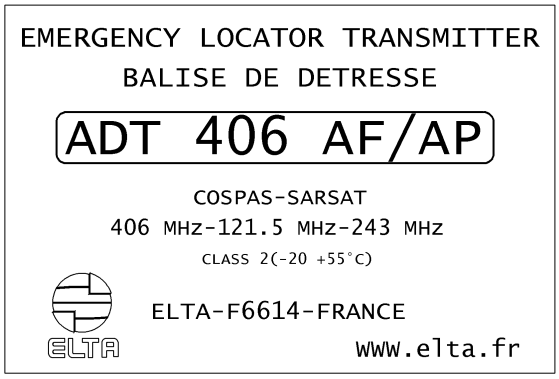

(b)Connectors use label

This label gives indication on the electronic front face connectors use.

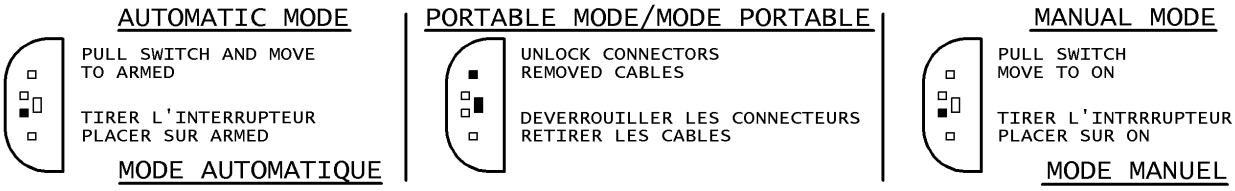

(c)Connectors location label

This label indicates the location of the connectors on the front face of the electronic assy.

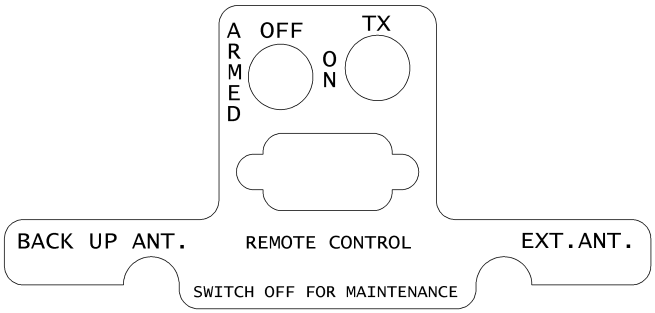

(d)Identification label

This label indicates the axis according to which the ELT ADT 406 AF / AP must be installed on the aircraft (see paragraph. 4.B.) for automatic activation (G-switch).
It is fixed to the activation / identification module.

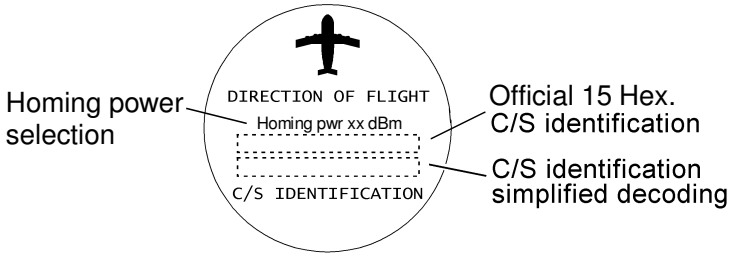

(e)Batteries label

This label indicates the batteries expiry date (next battery servicing).

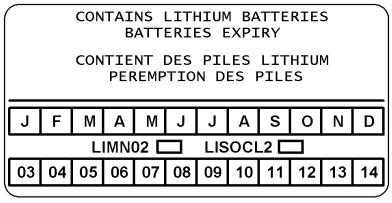

(3)ELT ADT 406 AF / AP aircraft components

(a)Remote control unit

The remote control unit integrated in the aircraft cockpit consists of :

- a RESET/TEST pushbutton,
- an ELT ON indicator light,
- a two-position ON/ARMED switch with safety cover (flip guard). The safety cover forces the switch to ARMED position. This switch must always remain in this position, except in the case of manual distress triggering.

The beacon is integrated in the aircraft as far aft as possible and so it must be connected to the remote control unit. This remote control unit enables beacon operation to be forced to ON, to be tested (TEST) or shutdown and restore in standby or ARMED mode (RESET) in the event of an untimely triggering of the ELT, from the aircraft cockpit.

(b)External antenna

An external antenna is recommended to be installed on the fuselage of the aircraft to maximize transmission of the distress signal to the satellites as required by JAR OPS.

The cable lenght should remain as short as possible in order to keep RF losses as close as possible to 0.5 to 1 dB at each frequencies (121.5/243/406.028 MHz) and to reduce the probability of cable damage during the crash.

4. INSTALLATION OF THE ELT ADT 406 AF / AP

A. General

System security and reliability obviously depends on the standard of installation.

In order to ensure installation of the highest standard, the installation operations must be :

- performed in conformity with this document,
- performed in compliance with the current regulations,
- performed by qualified personnel,
- performed so that :
  - the aircraft's structural integrity is not affected,
  - it will not hinder the pilot in normal position,
  - it will not cause any damage in the event of an accident,
  - it will not prevent or modify operation of the other safety systems.
    If in doubt, contact the aircraft manufacturer or its representative,
- inspected by representative authority.

B. Installation of the beacon on the aircraft (Ref. Fig. 4)

The beacon shall be installed in the rear of the aircraft in order to maximize the probability of ELT survival in case of crash.

The activation / identification module DIRECTION OF FLIGHT must be parallel with the aircraft flight axis as indicated by the beacon's label. The activation / identification module direction and the A/C forward/aft directions must be respected to ensure correct acceleration sensor (G.switch) operation (See Fig. 4).

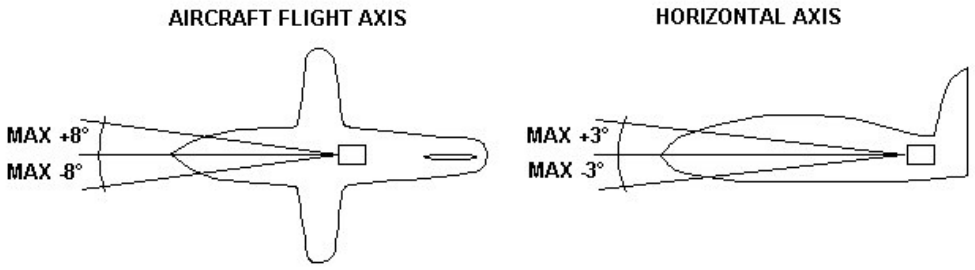

NOTE : An angle of up to ± 8° from the aircraft flight axis could be allowed.
An angle of up to ± 3° from the aircraft horizontal axis could be allowed.

Tolerances on the Axis for Installation of the ELT ADT 406 AF / AP

Figure 4

The beacon can be installed in any position (normal, upside down, right side, left side) with respect with the G-Switch activation direction stated on figure 4.

The activation / identification assy of the beacon can be installed in four positions. Three alignment pins on the beacon board allow to set it in the required position. A cap is installed in one of the four holes of the activation / identification assy who is unused.
This cap shall be assigned upon the initial installation and will keep this position in memory for further beacon replacement.

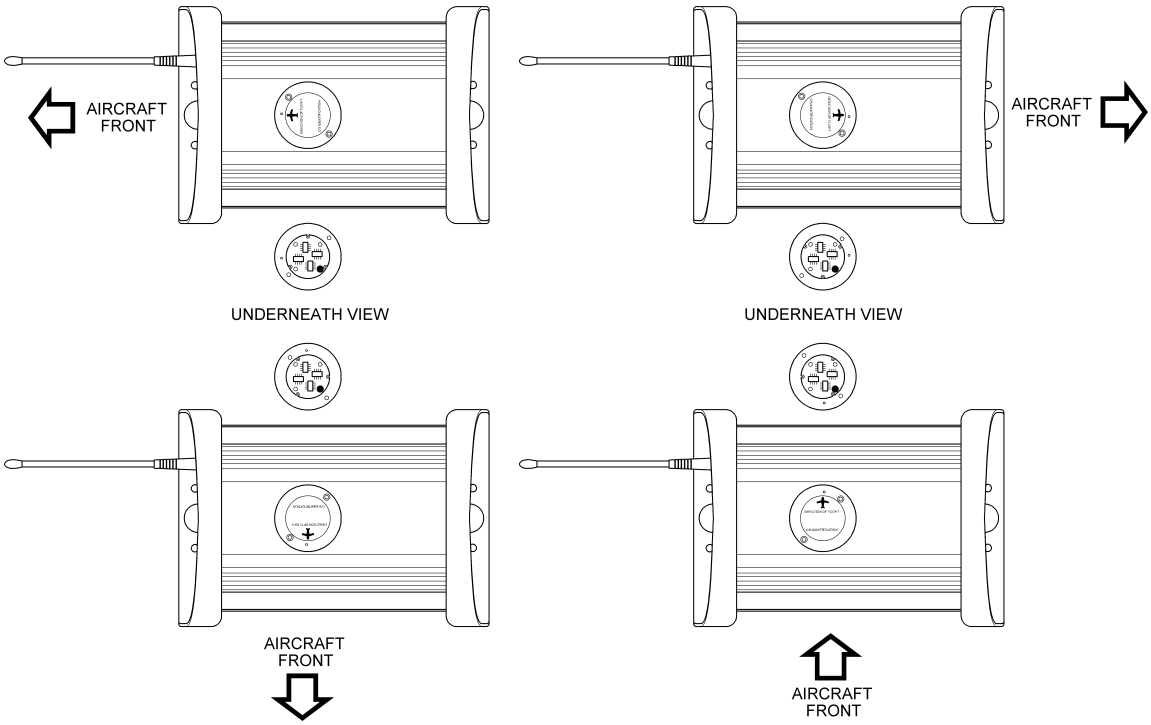

After correct installation of the Activation/Identification module, it shall be attached to the A/C by means of the metalic strap in order to keep on board A/C the Cospas-Sarsat identification information related to the installed ELT. So these information will remain in the A/C upon transmitter exchange (for overhaul process as exemple).

Unstowed objects must be not able to impact the beacon.

Attach the beacon to the fuselage of the aircraft by means of four M4 bolts. Four 5 mm diameter holes at the corners of a 210 mm x 45 mm rectangle are drilled in the beacon. Particular care must be taken with this attachment. Standard industry means must be used to lock the screws. Use flat washer in order to avoid paint damage.

***CAUTION* : This ELT shall be fixed on the primary A/C structure for correct G-Switch operation during the crash.**

The figure 5 shows the drilling pattern dimensions and determine the required area to access to the beacon controls and connectors.

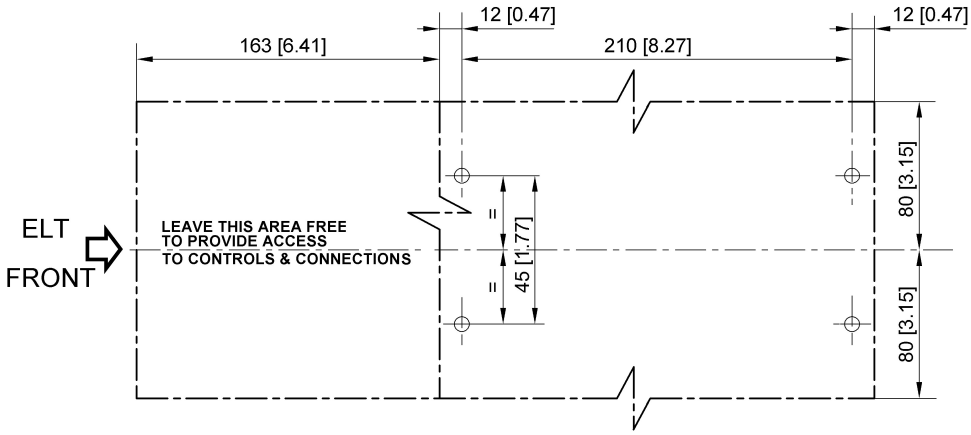

Installation of the ELT ADT 406 AF / AP - Drilling Pattern Dimensions

Figure 5

C. External antenna installation

ELTA recommend to use P/N 25988 (antenna model 2624-82 manufactured by CHELTON)

Other external antenna may be used but at least shall be approved by Cospas-Sarsat and shall not have a capacitive input. Contact ELTA or one of its approved agent to chek if the antenna can be used with this ELT model.

The external antenna must be installed on the upper part of the fuselage, as far aft as possible.
Particular care must be taken with this attachment. Standart industry means must be used to lock the screws.
The contact surface should be reinforced to prevent the antenna from tearing away at high speeds.

The cable used shall be of a high quality with very low losses.
RG 142 cable type is recommended with a length lower than 2 meters to keep losses close to 0.5 dB.
Connect the connector to the antenna and to the EXT. ANT. access on ELT, and install the coaxial cable.
This cable must be fixed to rigid aircraft structure all along its routing, and it should be as short as possible to avoid Radio Frequency losses and/or cable destruction in case of crash.

D. Remote control unit installation

The ELT ADT 406 AF / AP can be remotely controlled by using a remote control panel installed in the cockpit of the aircraft.

The maximum length of this link is 200 meters and requires no grounded cable. The link requires 4 wires.

The following simplified diagram shows the wiring between the ELT ADT 406 AF / AP and its peripherals :

– The Remote Control Panel (in cockpit) identified as "RCP",
– the external antenna noted as "EA",
– the back up antenna noted as "BA".

The EA is connected to the ELT ADT 406 AF / AP BNC female connector (5).

The BA is connected to the ELT ADT 406 AF / AP TNC female connector (1).

The RCP is connected to the ELT ADT 406 AF / AP high density 15 pins female Sub-D connector (3). ELTA recommend to use P/N 16243 (or Type 8525-16R 14SN- or equivalent) for RCP connector and reference 8635 15 P (Sub-D HD plug) + 8635 4100 (pins) from FCI manufacturer or equivalent.

A three position guarded switch (2) controls the ELT ADT 406 AF / AP.

A red indicator (4) displays the ELT ADT 406 AF / AP state.

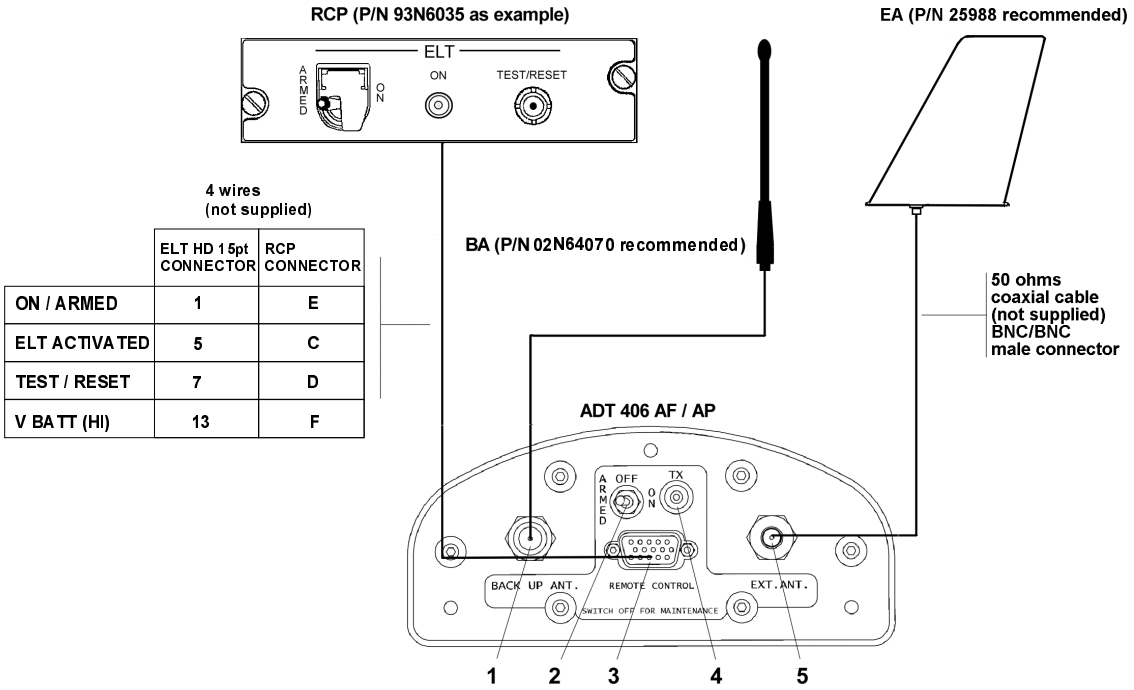

ADT 406 AF / AP Beacon Installation

Figure 6

E. Installation and configuration of the beacon (Ref. Fig. 5)

<u>CAUTION</u> : TO BE OPERATIONAL, THE BEACON SHALL BE IN "ARMED" POSITION ONCE IT HAS BEEN CORRECTLY INSTALLED.

Connect the antenna cable to the EXT. ANT. connector.

Connect the back up antenna to ELT.

Switch the Remote Control ON/ARMED lockable toggle switch to "ARMED" on remote control panel.

Connect the remote control unit cable to the REMOTE CONTROL connector on ELT and lock it.

Connect the remote control unit cable rear of the remote control panel and lock it.

Switch the Beacon ARMED/OFF/ON lockable toggle switch to ARMED (pull and slide), the system is ready for use.

<u>CAUTION</u> : AS SOON AS THE BEACON IS IN ARMED IT CAN BE AUTOMATICALLY ACTIVATED BY THE INTERNAL G-SWITCH.

5. UTILIZATION OF THE ELT ADT 406 AF / AP (Ref. Fig. 7)

***CAUTION* : IN THE EVENT OF UNTIMELY BEACON ACTIVATION, SHUTDOWN THE BEACON AND INFORM THE CLOSEST SEARCH AND RESCUE (SAR) OR AIRPORT CONTROL TOWER IMMEDIATELY.**

The ELT ADT 406 can be activated in two modes :

– automatic when the acceleration sensor is triggered,
– manual.

A. Automatic activation

The acceleration sensor has detected an impact sufficient to trigger it. The indicator light (8) and the aural indicator indicate beacon activation.
Otherwise do not do anything and leave the beacon in operation until the rescue team arrives.

Upon automatic activation the ELT enter directly in a waiting condition for about 30s (self test is not performed). This state is displayed by flasing on indicator light (8) 1.75s ON, 0.25s OFF.
WARNING : In case of false activation the operator shall shut down the ELT as described in C. After this delay the ELT will transmit actual distress signals on the three availables distress frequencies.

B. Manual activation

There are two cases in which a distress signal may be triggered manually :

– the acceleration sensor (G.switch) has not been triggered but a distress signal must be sent (injured passengers, aircraft out of operation ...),
– the aircraft is on the ground and must be evacuated.

(1)First case, from the Remote Control

Raise the safety cover (guard) on the remote control unit and place the switch in the ON position (lever upwards).
An automatic self-test sequence is performed.

Then the indicator light (8) and the aural indicator indicate beacon activation. This signal is permanently displayed on the Remote Control LED.

Do not do anything and leave the beacon in operation until the rescue team arrives.

(2)Second case, from the beacon

Place the beacon switch (9) in the ON position (pull and slide).
An automatic self-test sequence is performed.

Then the beacon enter in a waiting condition for about 30s. This state is displayed by flashing on indicator light (8) 1.75 s ON, 0.25 s OFF. This delay will avoid unwanted activation (false manoeuvre).

Then the indicator light (8) and the aural indicator indicate beacon activation. The actual distress signal is transmitted. This state is displayed by flashing on indicator light : 0.5 s ON, 0.5 s OFF.

C. Beacon shutdown

In the event of a false manoeuvre or untimely operation, shutdown the beacon.

The beacon is shutdown by pressing the RESET/TEST pushbutton on the remote control unit. This control is not active during the self test sequence or if the ON/ARMED switch is in ON position.

NOTE : Stopping distress signal transmission by means of the remote control unit does not switch the beacon OFF. It is restored in ARMED mode.

Acknowledgment of the control is displayed by 2 short blink on LED and buzzer.

***CAUTION* : THE BEACON MUST BE SHUTDOWN BEFORE ANY MAINTENANCE OPERATIONS ARE PERFORMED.**
THE BEACON MUST BE COMPLETELY SHUTDOWN BEFORE IT IS REMOVED AND IT'S ARMED/OFF/ON TOGGLE SWITCH SHALL BE IN OFF POSITION.

D. Beacon self-test

***CAUTION* : THE SELF-TEST SHALL BE PERFORMED WITHIN THE FIRST 5.MN OF ANY HOUR BECAUSE THE ELT IS SENDING 121.5 MHZ SIGNAL FOR 5 S DURING THIS PROCESS (LIMITATION OF FALSE ALERT).**

The ELT ADT 406 AF / AP is designed to perform a self-test, from the remote control unit, or as soon as the beacon is started up manually.
Actual test transmission on 121.5 MHz for 5 s can be listened on any VHF receiver.

(1)Self-test on the beacon

***CAUTION* : THIS SELF- TEST PROCESS SHALL NOT BE INTERUPTED**
IF THIS PROCESS IS NOT COMPLETE FOR ANY REASON PERFORM A NEW COMPLETE SELF-TEST

Place the beacon's ARMED/OFF/ON toggle switch (9) in ON position.

After two short blinks there is a delay of approximately 3 seconds, then the indicator light (8) comes ON and the buzzer sounds for approximately 6 seconds.

After a brief blink the self-test report is display :

- 10 s permanent illumination of the indicator light (8) for correct operation,
- 10 s blinking condition of the indicator light (8) for failure detection.
  Blinking rate indicates the failure source detection as follow :
  . 125 ms ON, 125 ms OFF (Frequency 4 Hz), ELT Check Sum failure (software problem)
  . 250 ms ON, 250 ms OFF (Frequency 2 Hz), ELT power failure (UHF and/or VHF)
  . 500 ms ON, 500 ms OFF (Frequency 1 Hz), Ext. Antenna connection failure or signal identification missing.

Then the beacon enter in a waiting condition for 30 s (rate : 1.75s ON; 0.25s OFF).

During this state return the switch (9) to ARMED position.

<u>CAUTION</u> : OPERATOR SHALL SWITCH OFF OR ARMED THE ELT WITHIN 30 S AFTER SELF-TEST REPORT TO AVOID REAL DISTRESS TRANSMISSION.

(2)Self-test by means of the remote control unit

The beacon's ARMED/OFF/ON toggle switch (9) must be in ARMED position.

The Remote Control ARMED/ON must be in ARMED position.

Press the RESET/TEST pushbutton until the two acknowledgment blinks on LED.

Then, after a delay of approximately 6 seconds, the self-test report is displayed on the Remote Control Unit LED :

- 10 s permanent illumination for correct operation,
- 10 s blinking condition for failure detection.
  Blinking rate indicates the failure source detection as follow :
  . 125 ms ON, 125 ms OFF (Frequency 4 Hz), ELT Check Sum failure (software problem)
  . 250 ms ON, 250 ms OFF (Frequency 2 Hz), ELT power failure (UHF and/or VHF)
  . 500 ms ON, 500 ms OFF (Frequency 1 Hz), Ext. Antenna connection failure or signal identification missing.

NOTE: On the beacon, after the two short blinks, the indicator light (8) comes ON and the buzzer sounds during 6 seconds. This is the self-test process. Then the self-test report is indicated as it is done for the Remote Control Unit LED

<u>CAUTION</u> : THE ELT SHALL BE IN ARMED POSITION.
IF NOT REMOTE CONTROL WILL NOT OPERATE (TEST/RESET ON).

6. MAINTENANCE OF THE ELT ADT 406 AF / AP

A. Beacon self-test

The manufacturer recommends that a beacon self-test should be performed regularly. The highest rate is one per day. Normally this task is added to other periodic maintenance task such a "A" check. In all events the user must comply with the applicable regulations in the country concerned governing the self-test period.

The self-test must only be performed when the order to do so is given or by the competent authorities.

A higher rate of self-test will reduce the 5 years battery servicing.

***CAUTION* : THE SELF-TEST PROCEDURE (PARAGRAPH 5.D.) MUST BE RESPECTED TO AVOID UNTIMELY BEACON ACTIVATION.**

B. Maintenance periodicity table

Periodicity	Operations	Operator
5 years	Replacement of batteries	ELTA or approved agent/airline
5 years	General overhaul in specialized workshop	ELTA or approved agent/airline

C. Batteries replacement

***CAUTION* : THE BATTERY PACK SHALL BE APPROVED BY ELTA. IF OTHER PACK ARE USED ELTA WILL CANCEL WARRANTY AND WILL REFUSE ANY RESPONSIBILITY ON THE PRODUCT OPERATION / MISFUNCTION.**

***CAUTION* : THE BATTERIES USED CANNOT BE RECHARGED. DO NOT TRY TO OPEN OR RECHARGE THEM.**

Next battery servicing date is indicated on a label stuck on the back face of ADT 406 AF / AP.

The old batteries must be replaced with new batteries of a model approved by ELTA P/N 02N60052 (kit for battery servicing for one ELT) or 02N60053 (kit for battery servicing for ten ELTs).

ELTA recommends that the ELT ADT 406 AF / AP should undergo a general overhaul on its test and programming bench at this occasion.

Refer to CMM 25-60-10 for detail of operation.

D. Batteries discarding

The batteries must be discarded in compliance with the applicable regulations in the country concerned.

NOTE : The type of battery used is not dangerous for the environment provided that it is completely discharged.

Contact ELTA for getting additional discarding information.

E. Test to do at the time of a beacon return in workshop

Perfoms the following tests described in CMM 25-60-10 :

- visual check,
- test of acceleration sensor automatic triggering,
- functional test of ADT 406 AF / AP beacon,
- RF test on the operational frequencies 121.5 – 243 – 406 MHz.

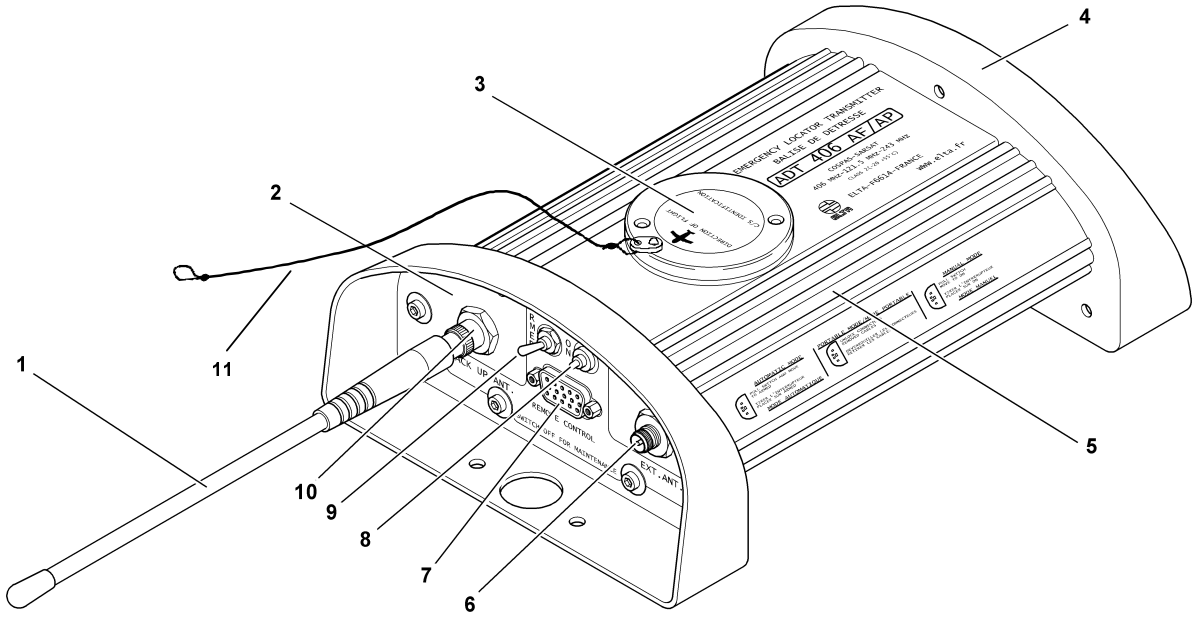

1 – BACK UP ANTENNA (BASIC CONFIGURATION)
2 – FRONT FACE
3 – ACTIVATION/IDENT ASSY
4 – BACK FACE
5 – MACHINED SECTION
6 – EXT. ANT. BNC CONNECTOR (FEMALE)
7 – REMOTE CONTROL CONNECTOR (SUB-D HD FEMALE 15 PINS)
8 – TX LED
9 – ARMED/OFF/ON TOGGLE AND GUARDED SWITCH
10 – BACK UP ANT. TNC CONNECTOR (FEMALE)
11 – METALIC STRAP

ELT ADT 406 AF / AP – Detailed Description

Figure 7

COSPAS-SARSAT
TYPE APPROVAL CERTIFICATE

For a 406 Megahertz Distress Beacon for use with the Cospas-Sarsat Satellite System

WHEREAS, ***ELTA*** of ***Toulouse, France,*** the manufacturer of a 406 Megahertz Distress Beacon packaged as an ***ELT***, and identified as Model: ***ADT406 AF/AP***[1] has submitted test data and had said beacon tested in ***October 2001 - June 2002*** at a facility accepted by Cospas-Sarsat at ***Intespace, Toulouse, France,*** to demonstrate that said beacon meets the applicable technical requirements for use with the Cospas-Sarsat Satellite System, as defined in documents C/S T.001", Issue 3 - Rev. 3, October 1999, and C/S T.007 "Cospas-Sarsat 406 MHz Distress Beacon Type Approval Standard", Issue 3 - Rev. 7, October 2000,[2] for frequency channel ***406.028*** MHz;

WHEREAS, the Cospas-Sarsat Council has determined, following a review of the test results, that the said beacon meets the Cospas-Sarsat Class 2 requirements and is rated for operating over the temperature range of ***-20 °C to +55 °C,***[3] with battery:

FRIWO (M20HR) or Ultralife (U3360HCES)
Lithium Manganese Dioxide ($LiMnO_2$, 2 X 2D-cells) and

WHEREAS, said manufacturer has certified that all other units of the same type will meet said technical requirements in a similar manner to the unit subjected to test, which incorporated the following features:

- ***121.5 and 243MHz Auxiliary radio locating devices (selectable 100/200 mW, continuous)***
- ***Automatic Activation***
- ***Self-test mode (one burst of 440 ms)***
- ***Remote control unit***
- ***Back up antenna***[4]

1) beacon is approved for use with 2624-82 Chelton blade antenna
2) beacon is approved for use with all short format user protocol coding options applicable to ELTs
3) specified operating lifetime 24 hours
4) back up antenna was not tested to full requirements of C/S T.007

NOW, THEREFORE, in reliance upon the following, the Cospas-Sarsat Council does hereby certify that the 406 MHz Distress Beacon Model identified herein is compatible with the Cospas-Sarsat System as of the date of this Certificate.

Certificate No: ***131***

Date: ***15 July 2002***

Signed by:

D. Levesque
Head of Cospas-Sarsat Secretariat

NOTE, HOWEVER:

1. This certificate does not authorize the operation or sale of any 406 MHz distress beacon. Such authorization may require type acceptance by national administrations in countries where the beacon will be distributed, and may also be subject to national licensing requirements.

2. This certificate is intended only as a formal notification to the above identified manufacturer that the Cospas-Sarsat Council has determined, on the basis of test data of a beacon submitted by the manufacturer, that 406 MHz distress beacons of the type identified herein meet the standards for use with the Cospas-Sarsat System. This certificate is not a warranty and Cospas-Sarsat hereby expressly disclaims any and all liability arising out of or in connection with the issuance, use, or misuse of this certificate.

3. This certificate is subject to revocation by the Cospas-Sarsat Council should the beacon type for which it is issued cease to meet the Cospas-Sarsat specification. A new certificate may be issued after satisfactory corrective action has been taken and correct performance demonstrated in accordance with to the Cospas-Sarsat Type Approval Standard.

Liberté • Égalité • Fraternité
RÉPUBLIQUE FRANÇAISE

DIRECTION
GENERALE
DE L'AVIATION CIVILE

Membre des Joint Aviation Authorities

JOINT TECHNICAL STANDARD ORDER AUTHORISATION

Numéro : F.O. 089

Number

Conformément à la réglementation nationale en vigueur et dans les conditions indiquées ci-après, la Direction Générale de l'Aviation Civile en accord avec les procédures JAA concernant les autorisations JTSO atteste par le présent certificat que

Pursuant to the national regulations for the time being in force and subject to the conditions specified below, the Direction Générale de l'Aviation Civile in accordance with JAA procedures for JTSO Authorisation hereby certifies

ELTA
14 Place Marcel DASSAULT
B.P. 48
31702, BLAGNAC CEDEX
France
(POA F.G.029 du 15/12/98)

est autorisé d'identifier les articles ci-desous par le(s) marquage(s) JTSO indiqué(s) pour :
is authorised to identify the following article(s) with the indicated JTSO marking(s) for :

Modèle	P/N	Désignation/JTSO
ADT 406 AF/AP	01N6590(x)(x)	**RBDA tri-fréquences Automatique fixe** *tri -frequency automatic fixed ELT* **JTSO 2C91a, JTSO 2C126**

(DDP N° 02E65151-B du 04/09/02)

Nota :a) Système incomplet : Ce système nécessite une antenne extérieure Cospas-Sarsat, tri-fréquences (121,5-243-406MHz) non capacitive de type ELTA P/N 25988, P/N 11242 ou P/N 11243

b) Les boites de télécommande P/N ELTA 93N6035(x), 96N9030(x) ou 96N902(x)(x) peuvent être associées à la Balise 01N6590(x)(x)

Note : a) Incomplete system : This system needs an external Cospas-Sarsat Three-Frequencies (121.5-243-406MHz) non capacitive antenna of ELTA P/N 25988, P/N 11242 or P/N 11243 type

b) Remote Control Panels P/N ELTA 93N6035(x), 96N9030(x) or 96N902(x)(x) can be associated with ELT 01N6590(x)(x).

Liberté • Égalité • Fraternité
RÉPUBLIQUE FRANÇAISE

DIRECTION GENERALE DE L'AVIATION CIVILE

Membre des Joint Aviation Authorities

CONDITIONS :

1. **Le détenteur de cette autorisation JTSO ne peut identifier son équipement avec ce marquage JTSO s'il n'est plus en conformité avec la réglementation française ou les procédures JAA concernant les autorisations JTSO,**
   The JTSO Authorisation Holder cannot identify an article with this JTSO marking if he does not remain in compliance with the French regulation or with JAA procedures for JTSO Authorisation
2. **Sous réserve de satisfaire à la condition précédente, cette autorisation reste valide sauf si elle a été restituée, suspendue ou retirée.**
   Subject to compliance with the foregoing condition, this approval shall remain valid unless the approval has been surrendered, suspended or revoked.

Date d'émission : 03-oct-02
Date of issue

Pour le Ministre chargé de l'Aviation Civile

Ingénieur en Chef de l'Armement
Chef du Bureau "Moteurs, hélices et équipements"

Francis FAGEGALTIER

2/2

TSO C91a AND TSO C126
APPROVAL

U.S. Department
of Transportation
**Federal Aviation
Administration**

**AIRCRAFT CERTIFICATION STAFF
c/o American Embassy
27, Boulevard du Regent
B-1000 Brussels, Belgium**

February 24, 2003

In reply refer to: GE/vk/02/24/03: 0029-03

Mr. Jacques Houget
Direction Generale de l'Aviation Civile
50, rue Henry Farman
F-75720 Paris Cedex 15
France

Dear Mr. Houget:

This letter refers to ELTA letter Ref. 03B60615, dated January 27, 2003, by which they made application for Technical Standard Order (TSO) design approval. This letter also acknowledges receipt of ELTA Statement of Conformance and of DGAC France letter Ref. 2003/0323, dated Janaury 30, 2003, certifying in accordance with FAR 21.617, that the Emergency Locator Transmitter (ELT) listed below complies with the requirements of TSO C91a and TSO C126, as designated in FAR 21.305(b).

Based on the DGAC France certification and receipt of the required data, we hereby accept ELTA TSO design approval to include the Emergency Locator Transmitter (ELT) listed below for manufacture at ELTA located at 14 Place Marcel Dassault, BP 48, 31702 Blagnac Cedex, France.

Type	Description
P/N 01N6590(x)(x)	Emergency Locator Transmitter (ELT) Model ADT 406 AF/AP

This letter of TSO design approval, together with the DGAC France Certificate of Airworthiness for Export, will authorize ELTA to identify the Emergency Locator Transmitter (ELT) with the TSO marking requirements described in FAR 21.607(d) and in TSO C91a and TSO C126 and is issued in accordance with FAR 21.617, governing issuance of TSO design approval for import appliances. Each item must be accompanied by a Certificate of Airworthiness for Export issued by the DGAC France or a duly authorized designee/organization (FAR 21.502(a)).

Deviation:

The requested automatic activation acceleration threshold specified to 2 ± 0.3 g (1.7 g to 2.3 g) is increased by 0.3 g to obtain 2.3 ± 0.3 g (2.0 to 2.6 g).

Any further deviation from the established design approval should be accomplished in accordance with FAR 21.609. The request for approval to deviate, together with all pertinent data, should be submitted to the Federal Aviation Administration (FAA) through the DGAC France and should contain information to show that the particular deviation is compensated for by factors or design features providing an equivalent level of safety.

The following statement must be furnished with each manufactured unit: "The conditions and tests required for TSO approval of this article are minimum performance standards. It is the responsibility of those desiring to install this article either on or within a specific type or class of aircraft to determine that the aircraft installation conditions are within the TSO standards. If not within the TSO standards, the article may be installed only if further evaluation by the applicant documents an acceptable installation and is approved by the Administrator."

A letter of TSO design approval issued under FAR 21.617 is not transferable and is effective until surrendered, withdrawn or otherwise terminated by the FAA (FAR 21.621).

The FAA may, upon notice, withdraw the letter of TSO design approval of any manufacturer who identifies with a TSO marking any article not meeting the performance standards of the applicable TSO (FAR 21.619). The DGAC France airworthiness certification is essential to the determination that the item meets the performance standards of the applicable TSO.

If there are any questions, please feel free to have your staff contact Gregory A. Edwards (Tel.: 322.508.2714)

Sincerely,

Thomas A. Boudreau
Manager, Aircraft Certification Staff
FAA-Brussels

Reference: GE/vk/02/24/03: 0029-03

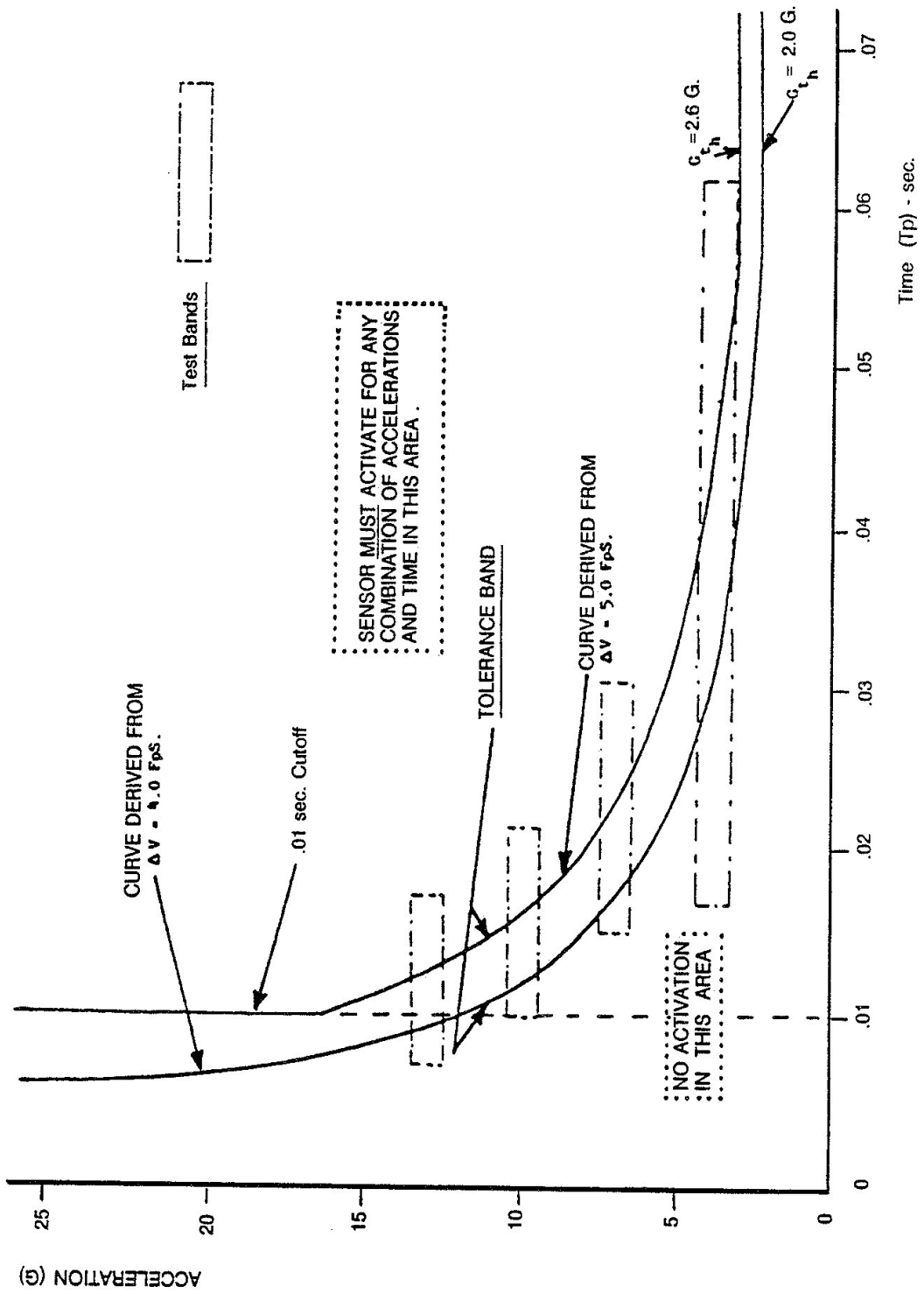

Crash Sensor Response Curve

LOG BOOK

FACTORY SETTING

NEXT BATTERY SERVICING ……../……. (MM/YYYY)

LOG BOOK

FACTORY SETTING

LOG BOOK

ENCODING UPDATE FORM

REGISTRATION COUNTRY: ELT SERIAL NUMBER:

PROTOCOL: ELT S/N ☐ A/C OP-DESIGNATOR + S/N ☐

A/C 24 Bit Address ☐ A/C REG. MARK ☐ TEST ☐

C/S 15 HEX:

SIMPLIFIED DEC:

A/C MSN: A/C OR A/P TYPE: FINAL OPERATOR:
CONTACT (PHONE, email…):

ISSUED BY:

DATE: ……/……/…… (MM/DD/YYYY)

SIGNATURE AND STAMP:

NOTE : Attach the encoding update sheet issued from the ELTA encoding tool.

REGISTRATION COUNTRY: ELT SERIAL NUMBER:

PROTOCOL: ELT S/N ☐ A/C OP-DESIGNATOR + S/N ☐

A/C 24 Bit Address ☐ A/C REG. MARK ☐ TEST ☐

C/S 15 HEX:

SIMPLIFIED DEC:

A/C MSN: A/C OR A/P TYPE: FINAL OPERATOR:
CONTACT (PHONE, email…):

ISSUED BY:

DATE: ……/……/…… (MM/DD/YYYY)

SIGNATURE AND STAMP:

NOTE : Attach the encoding update sheet issued from the ELTA encoding tool.

LOG BOOK

ENCODING UPDATE FORM

REGISTRATION COUNTRY: ELT SERIAL NUMBER:

PROTOCOL: ELT S/N ☐ A/C OP-DESIGNATOR + S/N ☐

A/C 24 Bit Address ☐ A/C REG. MARK ☐ TEST ☐

C/S 15 HEX:

SIMPLIFIED DEC:

A/C MSN: A/C OR A/P TYPE: FINAL OPERATOR:
CONTACT (PHONE, email…):

ISSUED BY:

DATE: ……/……/…… (MM/DD/YYYY)

SIGNATURE AND STAMP:

NOTE : Attach the encoding update sheet issued from the ELTA encoding tool.

REGISTRATION COUNTRY: ELT SERIAL NUMBER:

PROTOCOL: ELT S/N ☐ A/C OP-DESIGNATOR + S/N ☐

A/C 24 Bit Address ☐ A/C REG. MARK ☐ TEST ☐

C/S 15 HEX:

SIMPLIFIED DEC:

A/C MSN: A/C OR A/P TYPE: FINAL OPERATOR:
CONTACT (PHONE, email…):

ISSUED BY:

DATE: ……/……/…… (MM/DD/YYYY)

SIGNATURE AND STAMP:

NOTE : Attach the encoding update sheet issued from the ELTA encoding tool.

LOG BOOK

ENCODING UPDATE FORM

REGISTRATION COUNTRY: ELT SERIAL NUMBER:

PROTOCOL: ELT S/N ☐ A/C OP-DESIGNATOR + S/N ☐

A/C 24 Bit Address ☐ A/C REG. MARK ☐ TEST ☐

C/S 15 HEX:

SIMPLIFIED DEC:

A/C MSN: A/C OR A/P TYPE: FINAL OPERATOR:
CONTACT (PHONE, email…):

ISSUED BY:

DATE: ……/……/…… (MM/DD/YYYY)

SIGNATURE AND STAMP:

NOTE : Attach the encoding update sheet issued from the ELTA encoding tool.

REGISTRATION COUNTRY: ELT SERIAL NUMBER:

PROTOCOL: ELT S/N ☐ A/C OP-DESIGNATOR + S/N ☐

A/C 24 Bit Address ☐ A/C REG. MARK ☐ TEST ☐

C/S 15 HEX:

SIMPLIFIED DEC:

A/C MSN: A/C OR A/P TYPE: FINAL OPERATOR:
CONTACT (PHONE, email…):

ISSUED BY:

DATE: ……/……/…… (MM/DD/YYYY)

SIGNATURE AND STAMP:

NOTE : Attach the encoding update sheet issued from the ELTA encoding tool.

LOG BOOK

ENCODING UPDATE FORM

REGISTRATION COUNTRY: ELT SERIAL NUMBER:

PROTOCOL: ELT S/N ☐ A/C OP-DESIGNATOR + S/N ☐

A/C 24 Bit Address ☐ A/C REG. MARK ☐ TEST ☐

C/S 15 HEX:

SIMPLIFIED DEC:

A/C MSN: A/C OR A/P TYPE: FINAL OPERATOR:
CONTACT (PHONE, email…):

ISSUED BY:

DATE: ……/……/…… (MM/DD/YYYY)

SIGNATURE AND STAMP:

NOTE : Attach the encoding update sheet issued from the ELTA encoding tool.

REGISTRATION COUNTRY: ELT SERIAL NUMBER:

PROTOCOL: ELT S/N ☐ A/C OP-DESIGNATOR + S/N ☐

A/C 24 Bit Address ☐ A/C REG. MARK ☐ TEST ☐

C/S 15 HEX:

SIMPLIFIED DEC:

A/C MSN: A/C OR A/P TYPE: FINAL OPERATOR:
CONTACT (PHONE, email…):

ISSUED BY:

DATE: ……/……/…… (MM/DD/YYYY)

SIGNATURE AND STAMP:

NOTE : Attach the encoding update sheet issued from the ELTA encoding tool.

LOG BOOK

ENCODING UPDATE FORM

REGISTRATION COUNTRY: ELT SERIAL NUMBER:

PROTOCOL: ELT S/N ☐ A/C OP-DESIGNATOR + S/N ☐

A/C 24 Bit Address ☐ A/C REG. MARK ☐ TEST ☐

C/S 15 HEX:

SIMPLIFIED DEC:

A/C MSN: A/C OR A/P TYPE: FINAL OPERATOR:
CONTACT (PHONE, email…):

ISSUED BY:

DATE: ……/……/…… (MM/DD/YYYY)

SIGNATURE AND STAMP:

NOTE : Attach the encoding update sheet issued from the ELTA encoding tool.

REGISTRATION COUNTRY: ELT SERIAL NUMBER:

PROTOCOL: ELT S/N ☐ A/C OP-DESIGNATOR + S/N ☐

A/C 24 Bit Address ☐ A/C REG. MARK ☐ TEST ☐

C/S 15 HEX:

SIMPLIFIED DEC:

A/C MSN: A/C OR A/P TYPE: FINAL OPERATOR:
CONTACT (PHONE, email…):

ISSUED BY:

DATE: ……/……/…… (MM/DD/YYYY)

SIGNATURE AND STAMP:

NOTE : Attach the encoding update sheet issued from the ELTA encoding tool.

LOG BOOK

ENCODING UPDATE FORM

REGISTRATION COUNTRY: ELT SERIAL NUMBER:

PROTOCOL: ELT S/N ☐ A/C OP-DESIGNATOR + S/N ☐

A/C 24 Bit Address ☐ A/C REG. MARK ☐ TEST ☐

C/S 15 HEX:

SIMPLIFIED DEC:

A/C MSN: A/C OR A/P TYPE: FINAL OPERATOR:
CONTACT (PHONE, email…):

ISSUED BY:

DATE: ……/……/…… (MM/DD/YYYY)

SIGNATURE AND STAMP:

NOTE : Attach the encoding update sheet issued from the ELTA encoding tool.

REGISTRATION COUNTRY: ELT SERIAL NUMBER:

PROTOCOL: ELT S/N ☐ A/C OP-DESIGNATOR + S/N ☐

A/C 24 Bit Address ☐ A/C REG. MARK ☐ TEST ☐

C/S 15 HEX:

SIMPLIFIED DEC:

A/C MSN: A/C OR A/P TYPE: FINAL OPERATOR:
CONTACT (PHONE, email…):

ISSUED BY:

DATE: ……/……/…… (MM/DD/YYYY)

SIGNATURE AND STAMP:

NOTE : Attach the encoding update sheet issued from the ELTA encoding tool.

LOG BOOK

MAINTENANCE TASKS

FINAL OPERATOR:

TYPE OF MAINTENANCE: BATTERY SERVICING ☐ INSPECTION ☐ REPAIR ☐

RF TEST ☐

TASK DESCRIPTION:

NEXT BATTERY SERVICING: ……/…… (MM/YYYY)

DATE: ……/……/…… (MM/DD/YYYY)

REPAIR STATION:

SIGNATURE AND STAMP:

NOTE : Attach the RF test sheet issued from the ELTA test tool.

FINAL OPERATOR:

TYPE OF MAINTENANCE: BATTERY SERVICING ☐ INSPECTION ☐ REPAIR ☐

RF TEST ☐

TASK DESCRIPTION:

NEXT BATTERY SERVICING: ……/…… (MM/YYYY)

DATE: ……/……/…… (MM/DD/YYYY)

REPAIR STATION:

SIGNATURE AND STAMP:

NOTE : Attach the RF test sheet issued from the ELTA test tool.

LOG BOOK

MAINTENANCE TASKS

FINAL OPERATOR:

TYPE OF MAINTENANCE: BATTERY SERVICING ☐ INSPECTION ☐ REPAIR ☐

RF TEST ☐

TASK DESCRIPTION:

NEXT BATTERY SERVICING: ……/…… (MM/YYYY)

DATE: ……/……/…… (MM/DD/YYYY)

REPAIR STATION:

SIGNATURE AND STAMP:

NOTE : Attach the RF test sheet issued from the ELTA test tool.

FINAL OPERATOR:

TYPE OF MAINTENANCE: BATTERY SERVICING ☐ INSPECTION ☐ REPAIR ☐

RF TEST ☐

TASK DESCRIPTION:

NEXT BATTERY SERVICING: ……/…… (MM/YYYY)

DATE: ……/……/…… (MM/DD/YYYY)

REPAIR STATION:

SIGNATURE AND STAMP:

NOTE : Attach the RF test sheet issued from the ELTA test tool.

LOG BOOK

MAINTENANCE TASKS

FINAL OPERATOR:

TYPE OF MAINTENANCE: BATTERY SERVICING ☐ INSPECTION ☐ REPAIR ☐

RF TEST ☐

TASK DESCRIPTION:

NEXT BATTERY SERVICING: ……/…… (MM/YYYY)

DATE: ……/……/…… (MM/DD/YYYY)

REPAIR STATION:

SIGNATURE AND STAMP:

NOTE : Attach the RF test sheet issued from the ELTA test tool.

FINAL OPERATOR:

TYPE OF MAINTENANCE: BATTERY SERVICING ☐ INSPECTION ☐ REPAIR ☐

RF TEST ☐

TASK DESCRIPTION:

NEXT BATTERY SERVICING: ……/…… (MM/YYYY)

DATE: ……/……/…… (MM/DD/YYYY)

REPAIR STATION:

SIGNATURE AND STAMP:

NOTE : Attach the RF test sheet issued from the ELTA test tool.

LOG BOOK

MAINTENANCE TASKS

FINAL OPERATOR:

TYPE OF MAINTENANCE: BATTERY SERVICING ☐ INSPECTION ☐ REPAIR ☐

RF TEST ☐

TASK DESCRIPTION:

NEXT BATTERY SERVICING: ……/…… (MM/YYYY)

DATE: ……/……/…… (MM/DD/YYYY)

REPAIR STATION:

SIGNATURE AND STAMP:

NOTE : Attach the RF test sheet issued from the ELTA test tool.

FINAL OPERATOR:

TYPE OF MAINTENANCE: BATTERY SERVICING ☐ INSPECTION ☐ REPAIR ☐

RF TEST ☐

TASK DESCRIPTION:

NEXT BATTERY SERVICING: ……/…… (MM/YYYY)

DATE: ……/……/…… (MM/DD/YYYY)

REPAIR STATION:

SIGNATURE AND STAMP:

NOTE : Attach the RF test sheet issued from the ELTA test tool.

LOG BOOK

MAINTENANCE TASKS

FINAL OPERATOR:

TYPE OF MAINTENANCE: BATTERY SERVICING ☐ INSPECTION ☐ REPAIR ☐

RF TEST ☐

TASK DESCRIPTION:

NEXT BATTERY SERVICING: ……/…… (MM/YYYY)

DATE: ……/……/…… (MM/DD/YYYY)

REPAIR STATION:

SIGNATURE AND STAMP:

NOTE : Attach the RF test sheet issued from the ELTA test tool.

FINAL OPERATOR:

TYPE OF MAINTENANCE: BATTERY SERVICING ☐ INSPECTION ☐ REPAIR ☐

RF TEST ☐

TASK DESCRIPTION:

NEXT BATTERY SERVICING: ……/…… (MM/YYYY)

DATE: ……/……/…… (MM/DD/YYYY)

REPAIR STATION:

SIGNATURE AND STAMP:

NOTE : Attach the RF test sheet issued from the ELTA test tool.

LOG BOOK

MAINTENANCE TASKS

FINAL OPERATOR:

TYPE OF MAINTENANCE: BATTERY SERVICING ☐ INSPECTION ☐ REPAIR ☐

RF TEST ☐

TASK DESCRIPTION:

NEXT BATTERY SERVICING: ……/…… (MM/YYYY)

DATE: ……/……/…… (MM/DD/YYYY)

REPAIR STATION:

SIGNATURE AND STAMP:

NOTE : Attach the RF test sheet issued from the ELTA test tool.

FINAL OPERATOR:

TYPE OF MAINTENANCE: BATTERY SERVICING ☐ INSPECTION ☐ REPAIR ☐

RF TEST ☐

TASK DESCRIPTION:

NEXT BATTERY SERVICING: ……/…… (MM/YYYY)

DATE: ……/……/…… (MM/DD/YYYY)

REPAIR STATION:

SIGNATURE AND STAMP:

NOTE : Attach the RF test sheet issued from the ELTA test tool.