USER'S HANDBOOK
INCLUDING INSTALLATION MANUAL
AND LOG BOOK

SERIAL NUMBER LABEL

EMERGENCY LOCATOR TRANSMITTER
MODEL ADT 406 AP
IN THE COSPAS / SARSAT SYSTEM

Issued by

ELTA
F6614
14 Place Marcel Dassault
31702 BLAGNAC
France
www.elta.fr

ELTA

USER'S HANDBOOK

LIST OF UPDATES

UPDATE No.	ISSUE	INSERTION		UPDATE No.	ISSUE	INSERTION	
		DATE	BY			DATE	BY
A	INITIAL	Feb 15/03	E.LABRIFFE				
B		Apr 17/03	E.LABRIFFE				

PAGE INTENTIONALLY LEFT BLANK

LIST OF EFFECTIVE PAGES

CHAPTER/ SECTION	PAGE	DATE
TITLE PAGE		Apr 17/03
LISTE OF UPDATES	1	Apr 17/03
	2	BLANK
LIST OF EFFECTIVE PAGE	3	Apr 17/03
	4	BLANK
TABLE OF ILLUSTRATIONS	5	Feb 15/03
	6	BLANK
LEADING PARTICULARS	7	Feb 15/03
	8	BLANK
TABLE OF CONTENTS	9	Feb 15/03
	10	BLANK
	11	Feb 15/03
	12	Feb 15/03
	13	Feb 15/03
	14	Apr 17/03
	15	Apr 17/03
	16	Apr 17/03
	17	Apr 17/03
	18	Apr 17/03
	19	Feb 15/03
	20	Apr 17/03
	21	Feb 15/03
	22	Feb 15/03
	23	Feb 15/03
	24	Feb 15/03
	25	Feb 15/03
	26	Apr 17/03
	27	Feb 15/03
	28	Apr 17/03
	29	Apr 17/03
	30	Apr 17/03
	31	Apr 17/03
	32	Feb 15/03
	33	Feb 15/03
	34	Apr 17/03

CHAPTER/ SECTION	PAGE	DATE
Appendix A	1	Feb 15/03
	2	Feb 15/03
	3	Feb 15/03
	4	Feb 15/03
	5	Feb 15/03
Appendix B		
	1	Feb 15/03
	2	Feb 15/03
	3	Feb 15/03
	4	Feb 15/03
	5	Feb 15/03
	6	Feb 15/03
	7	Feb 15/03
	8	Feb 15/03
	9	Feb 15/03
	10	Feb 15/03
	11	Feb 15/03
	12	Feb 15/03
	13	Feb 15/03
	14	Feb 15/03

PAGE INTENTIONALLY LEFT BLANK

TABLE OF ILLUSTRATIONS

	Page
Figure 1 : COSPAS/SARSAT - System Principle	12
Figure 2 : ELT ADT 406 AP Presentation	14
Figure 3 : ELT ADT 406 AP – Dimensions (Basic Configuration)	15
Figure 4 : Tolerances on the Axis for Installation of the ELT ADT 406 AP	22
Figure 5 : Installation of the ELT ADT 406 AP - Drilling Pattern Dimensions	24
Figure 6 : ELT ADT 406 AP Installation - Wiring Diagram	26
Figure 7 : ELT ADT 406 AP - Detailed Description	34

PAGE INTENTIONALLY LEFT BLANK

LEADING PARTICULARS

CAUTION 1 **:** ***THIS TRANSMITTER IS AUTHORIZED FOR USE ONLY DURING SITUATIONS OF GRAVE AND IMMINENT DANGER.***

CAUTION 2 **:** ***IT IS IMPERATIVE THAT EACH BEACON OWNER REGISTERS THEIR BEACON. CONTACT ELTA OR APPROVED AGENT TO OBTAIN THE INFORMATION RELATIVE TO THIS REGISTRATION.***

CAUTION 3 **:** ***THE BEACON MUST IMPERATIVELY BE PROGRAMMED WITH THE RELEVANT IDENTIFICATION AUTHORIZED BY THE LOCAL AIRWORTHINESS.***

CAUTION 4 **:** ***ONCE THE BEACON HAS BEEN PROGRAMMED, IT IS GENERALY ASSIGNED TO AN AIRCRAFT (NAME AND IDENTIFICATION). IF THIS BEACON IS USED ON ANOTHER AIRCRAFT IT WOULD HAVE TO BE REPROGRAMMED (NEW NAME AND IDENTIFICATION).***

CAUTION 5 **:** ***BEFORE INSTALLING OR USING THIS EQUIPMENT, THE VALIDITY OF THE INFORMATION ON THE BEACON LABEL MUST IMPERATIVELY BE CHECKED.***

PAGE INTENTIONALLY LEFT BLANK

TABLE OF CONTENTS

PAGE

1. INTRODUCTION TO THE COSPAS-SARSAT SYSTEM 11

A. The COSPAS-SARSAT system 11
B. System organization 11
C. The distress frequencies 13
D. ELTA and the COSPAS-SARSAT system 13

2. GENERAL DETAILS OF THE ELT ADT 406 AP 14

A. Purpose of the ELT ADT 406 AP 14
B. Characteristics 16

3. DESCRIPTION OF THE ELT ADT 406 AP AND OF THE AIRCRAFT COMPONENTS 18

A. General description 18
B. Detailed description 18

4. INSTALLATION OF THE ELT ADT 406 AP 22

A. General 22
B. Installation of the beacon on the aircraft 22
C. External antenna installation 25
D. Remote control unit installation 25
E. Installation and configuration of the beacon 27

5. UTILIZATION OF THE ELT ADT 406 AP 28

A. Automatic activation 28
B. Manual activation 28
C. Beacon shutdown 30
D. Beacon self-test 30

6. MAINTENANCE OF THE ELT ADT 406 AP 32

A. Beacon self-test 32
B. Maintenance periodicity table 32
C. Battery replacement 32
D. Battery discarding 33
E. Test to do at the time of a beacon return in workshop 33

PAGE INTENTIONALLY LEFT BLANK

1. INTRODUCTION TO THE COSPAS-SARSAT SYSTEM

A. The COSPAS-SARSAT* system

The purpose of the COSPAS-SARSAT satellite system is to detect and locate all distress signals transmitted by aeronautical, maritime or land-based beacons, for the search and rescue organizations.

This program is the result of an international collaboration between the United States, Canada and France on the one hand (SARSAT project), and Russia on the other hand (COSPAS project). These two projects are fully compatible.

Since the first results were obtained several countries have joined the program. Several other countries have shown an interest and will soon be joining the COSPAS-SARSAT system partners.

ELTA in relation with CNES (French National Space Agency) has developed the complete range of products required for COSPAS-SARSAT system operation.

Following an in-depth study phase, ELTA has arrived at highly conclusive technical results, and experimental and operational use of the "ground" equipment have proven this equipment's reliability and ease-of-use.

B. System organization (Ref. Fig. 1)

In the COSPAS-SARSAT system, space equipment is placed on board several satellites in low near-polar orbit to capture transmissions from emergency transmitters and to retransmit these signals to specialized ground stations called **L**ocal **U**ser **T**erminals (LUT). These ground stations determine the position of the emergency transmitters and then retransmit the position data to the designated **M**ission **C**ontrol **C**enters (MCC). The MCCs in turn retransmit these data to the appropriate **R**escue **C**oordination **C**enters (RCC) so that they can start the search and rescue operations.

* COSPAS-SARSAT :
COSPAS = Kosmicheskaya Sistyema Poiska Avariynych Sudov
SARSAT = Search and Rescue Satellite-Aided Tracking

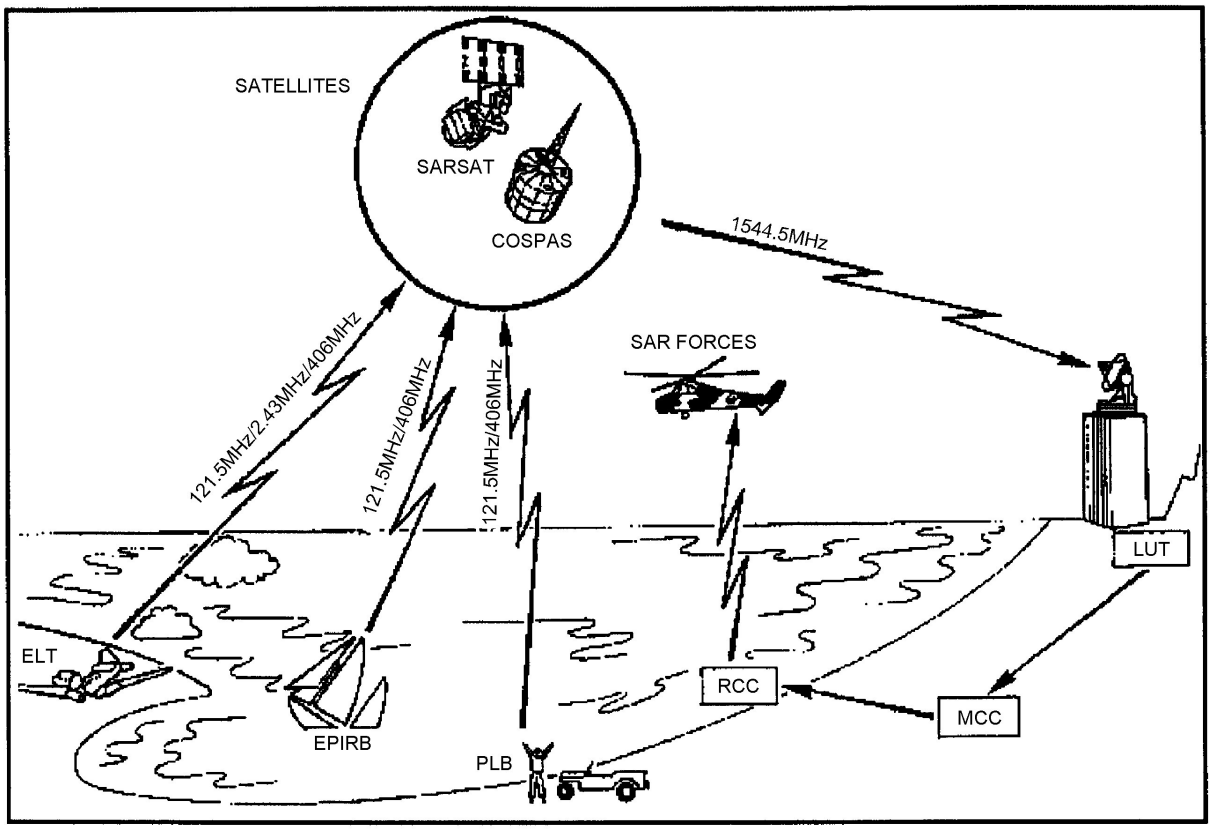

Legend :

ELT : **E**mergency **L**ocator **T**ransmitter
EPIRB : **E**mergency **P**osition **I**ndicating **R**adio **B**eacon
PLB : **P**ersonal **L**ocator **B**eacon
RCC: **R**escue **C**oordination **C**enters
MCC : **M**ission **C**ontrol **C**enters
LUT : **L**ocal **U**ser **T**erminals

COSPAS/SARSAT – System Principle

Figure 1

C. The distress frequencies

There are several advantages to using the 406 MHz frequency :

– Worldwide coverage: locating is not only possible in real-time within a radius of 2,500 km around the station, but also in global mode outside this zone since the satellites memorize the messages on the 406 MHz frequency. Location process uses Doppler effect.

– Locating accuracy: 2 km as opposed to 10 to 15 km in the 121.5 MHz or 243 MHz frequencies. It should be noted however that the 406 MHz beacons also transmit 121.5 MHz and 243 MHz signals which enable the final approach of the rescue teams in homing mode.

– Information reliability: the structure of the digital signal transmitted by these beacons makes it possible to be sure that there is actually a distress situation, as well as to identify automatically the mobile in distress which is vital for rescue operations.

– Unique identification: each beacon has it's own identification information.

D. ELTA and the COSPAS-SARSAT system

(1)406 MHz distress beacons:

These beacons transmit to the satellites a digital message which identifies them and gives their position, as well as a signal that facilitates the final approach of the rescue teams.

They are suitable for all types of use (maritime, aeronautical and land) and can, depending on the model, be activated manually or automatically. They are designed to function in the most extreme conditions with a high degree of reliability.

(2)Satellites low earth orbiting:

At least four satellites are permanently operational. Since their orbit is near-polar, in the worst case every point on Earth is overflown every two hours.

In a ground station's visibility zone, the satellites directly transmit the messages captured in that zone, and also any messages from the zones not covered that they have stored in memory.

(3)Geo-stationary satellites are now available in the system and offer faster detection capability (close to 5 minutes) but require a GPS receiver to supply location that is sent via C/S message.

(4)Ground reception stations:

The zone effectively covered (or visibility zone) is a circle with a radius of 2,500 km around the station. These stations receive (via the satellites) and process, in real time, the messages from the beacons activated in their visibility zone and, in batch mode, the messages from the 406 MHz beacons activated outside that zone and memorized by the satellites.

Automatic processing of the 406 MHz digital messages allows the beacons to be located and the carrier mobile to be identified.

2. GENERAL DETAILS OF THE ELT ADT 406 AP

A. Purpose of the ELT ADT 406 AP (Ref. Fig. 2)

The ELT ADT 406 AP consists of a beacon that incorporates means of attachment.

The ELT ADT 406 AP is designed to transmit a digital distress signal to satellites that are part of the COSPAS/SARSAT SYSTEM.

These satellites transmit the captured signal to the reception stations on the ground.

This signal is transmitted on the 406.028 MHz frequency and is used to precisely locate and identify the ELT ADT 406 AP.

It also transmits a 121.5 MHz and 243 MHz signal to facilitate the final approach of the distress scene (homing).

It can be triggered manually or automatically by means of an acceleration sensor (G.switch in accordance to EUROCAE ED-62 standard).

This ELT meets the latest JAR OPS and ICAO recommendations.

Any encoding protocol defined by COSPAS/SARSAT can be used with ELT ADT 406 AP including country code assignation.

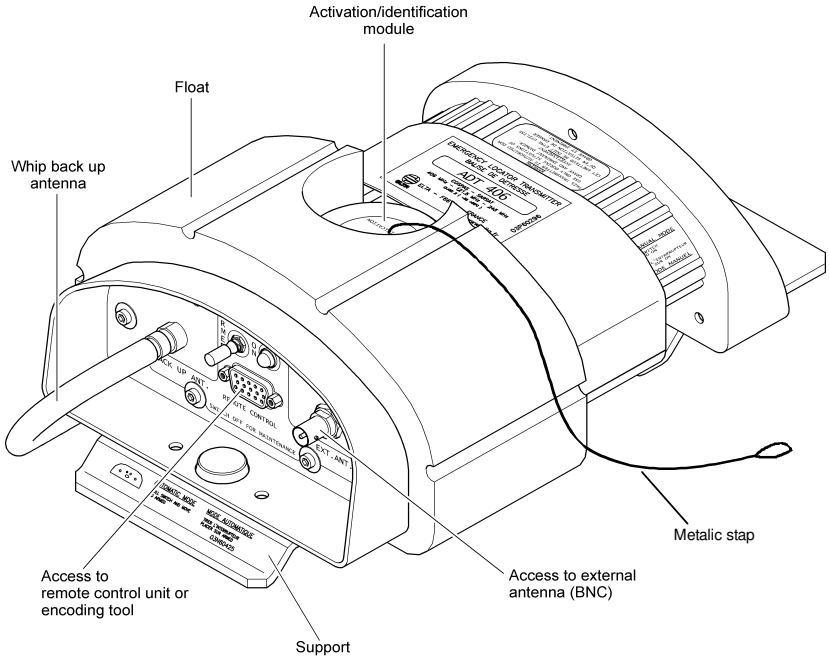

ELT ADT 406 AP- Presentation

Figure 2

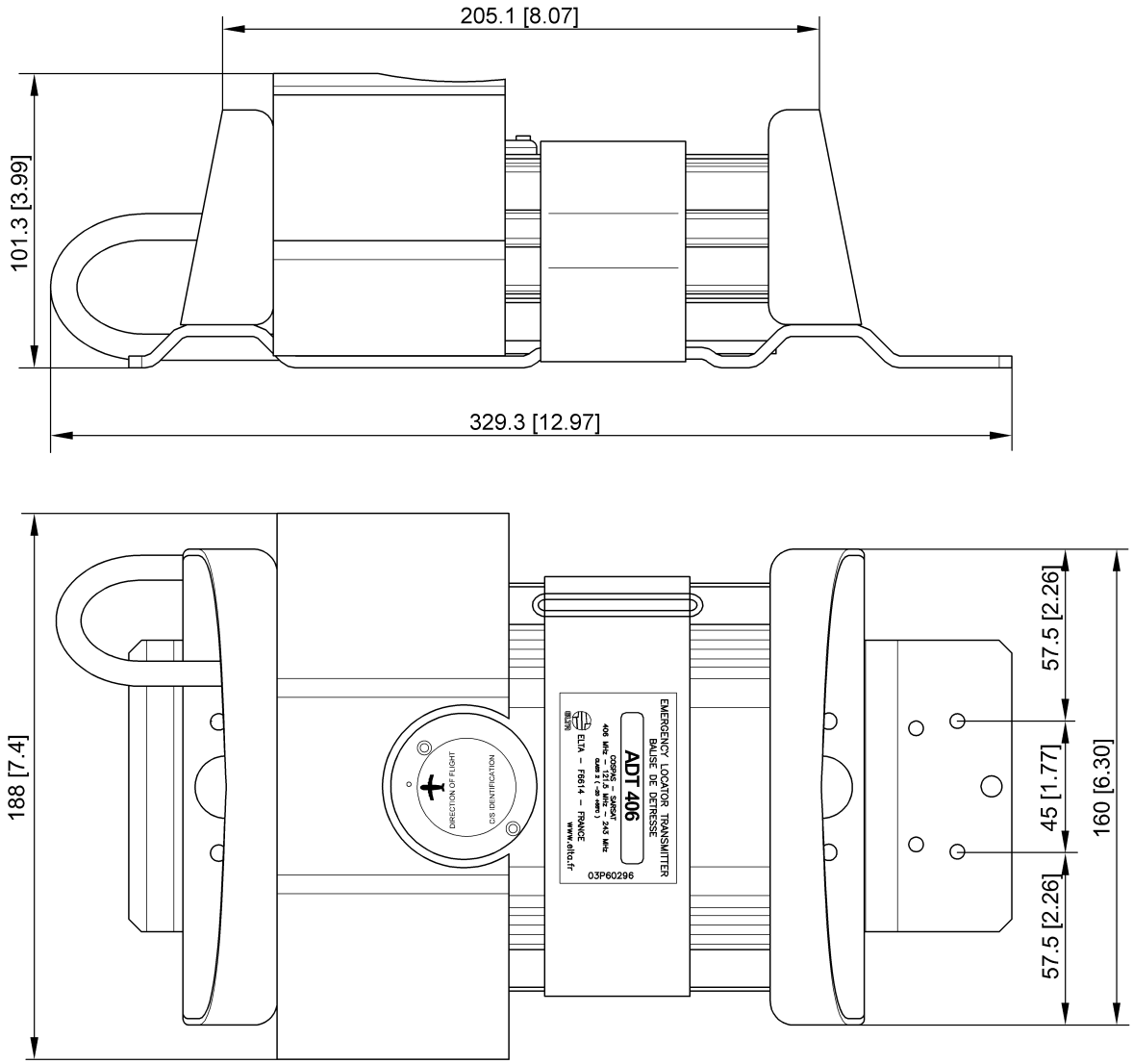

ELT ADT 406 AP - Overall Dimensions

(Without optional protecting cover)

Figure 3

B. Characteristics (Ref. Fig. 3)

(1)Approvals

ADT 406 AP is COSPAS/SARSAT approved (TAC 131, dated July 2002)

ADT 406 AP meets EUROCAE ED62 standard

ADT 406 AP is JTSO 2C91a and JTSO 2C126 (JTSO N° F.O. 0112 dated April 29, 2003)

ADT 406 AP is TSO C91a and TSO C126 (TSO letter dated June 12, 2003)

(2)Physical characteristics

(a)Beacon with support

Height : 101.3 mm
Width : 188 mm
Length : 329.3 mm
Weight : 2.1 kg or 2.15 kg with the option of a protecting cover

(b)Beacon only

Height : 101.3 mm
Width : 188 mm
Length : 234 mm (without back up antenna)
Weight : 1.7 kg (with back up antenna)
Back up antenna length : 375 mm (deployed)

(3)General characteristics

(a)External antenna

- Omnidirectionnal three-frequency antenna 50Ω access,
- conform to COSPAS/SARSAT and EUROCAE ED-62 specifications.

(b)Power supply

High energy batteries (2 series-connected packs), activable for 5 years. Autonomy 24 hours on 406.028 MHz and greater than 60 hours at -20°C on 121.5&243 MHz.

- Voltage : 6 VDC,
- capacity : 10.5 A/h,
- ELTA type number :00E64191,
- lithium manganese dioxide (solid cathode),
- battery servicing kit available: 02N60052 kit for one ELT
  02N60053 kit for 10 ELT

(c) Radio-electrical characteristics

1 406 MHz satellite transmitter

- Frequency : 406.028 MHz,
- transmitter power : 5 W,
- modulation : "L" two-phase,
- transmission recurrence : 50 s,
- transmission duration : 440 or 520 ms.

2 Associated homing transmitter

- Frequency : 121.5 MHz/243 Mhz or 121.5 MHz (selectable),
- 121.5 MHz transmitter power : 140 mW,
- 243 MHz transmitter power : 140 mW,
- modulation : AM (3K20A3X type) from, 1600 Hz to 300 Hz, up to four periods per second,
- antenna gain : > 1 dBi.

(d) Environment characteristics

- Operating temperatures : -20°C to +55°C,
- storage temperatures : -55°C to +85°C.

(e) Miscellaneous characteristics

- Automatic activation level in accordance with EUROCAE ED-62 (internal G-switch). Activation direction is selectable (4 possibe directions),

- color : orange in conformity with the international distress signal,

- self-test : transmission of one burst modulated with inverted frame synchronization and 5s transmission of 121.5 MHz , automation to off position (on remote control panel),

- any COSPAS/SARSAT protocol available,
  . ELT S/N
  . A/C operator designator and S/N
  . A/C 24 bits address
  . A/C nationality and registration marking (recommended)
  . Test
- any country code available,
- can operate in short or long C/S message. For long message, location data (from on board GPS as exemple) is received from A/C data bus through an interface module, P/N 01N6593(x)
- C/S identification stored in a transferable module to ease maintenance on ELT,
- dual antenna access Primary for external antenna and back up antenna in case of failure detection on primary access.

3. DESCRIPTION OF THE ELT ADT 406 AP AND OF THE AIRCRAFT COMPONENTS

A. General description

(1)Introduction

This beacon from the ADT406 family derives from the ADT 406 AF/AP model. Consequently, this beacon features the functional capabilities of the AF/AP besides its flotation gear, the attachment interface and its flexible antenna entirely compatible with Cospat/Sarsat.

(2)The ELT ADT 406 essentially consists of :

- an ADT 406 AP beacon transmitter
- a whip antenna,
- labels,
- an activation / identification module,
- a support.

(3)The ELT ADT 406 AP basic aircraft components consists of :

- a remote control unit,
- an external antenna.

Note : this beacon can be used in survival mode without these elements.

B. Detailed description (Ref. Fig. 7)

(1)The ADT 406 AP beacon

The ADT 406 AP beacon mainly consists of :

- a whip antenna,
- a power supply module,
- an electronic assembly,
- a mechanical assembly,
- a float.

The front face of the electronic assy is equipped with the following components :

- a REMOTE CONTROL electrical high density 15 pins female connector (10) for connecting up to the aircraft remote control panel or programming tools,
- a BACK UP WHIP ANT. TNC female connector (13) for connecting up the antenna,
- an EXT. ANT. BNC female connector (9) for connecting up the external antenna,
- an ARMED/OFF/ON lockable toggle switch (12) for activating the beacon,
- a TX indicator light (11) indicating beacon activation (real distress and self-test).

(2)The labels

(a)Identification label

This label indicates :

- beacon name, manufacturer details,
- the condition in which the beacon may be used (warning),
- approval number, identification, part number, service bulletin, serial number and conditions on the use of the beacon.

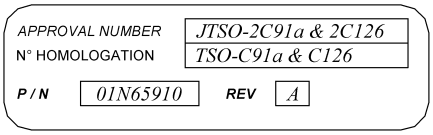

(b)Connectors use label

This label gives indication on the electronic front face connectors use.

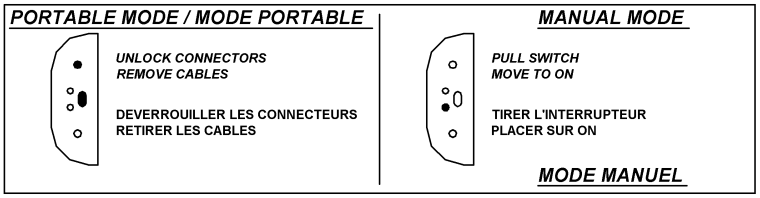

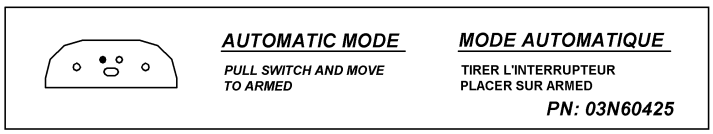

(c)Connectors location label

This label indicates the location of the connectors on the front face of the electronic assy.

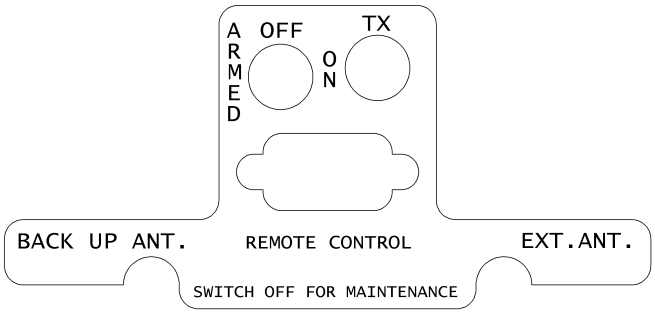

(d)Identification label

This label indicates the axis according to which the ELT ADT 406 AP must be installed on the aircraft (see paragraph. 4.B.) for automatic activation (G-switch).
It is fixed to the activation / identification module.

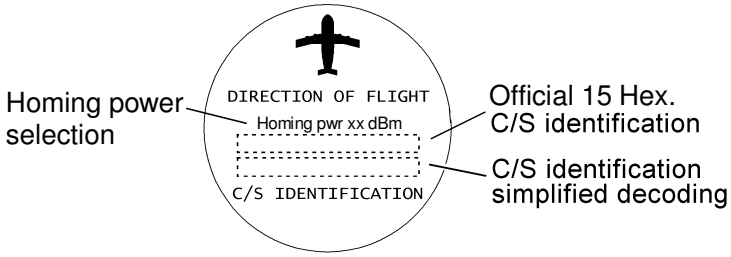

(e)Batteries label

This label indicates the batteries expiry date (next battery servicing).

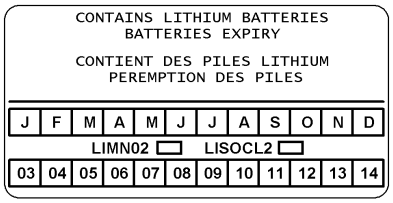

ELT ADT 406 AP aircraft components

(f) Remote control unit

The remote control unit integrated in the aircraft cockpit consists of :

- a RESET/TEST pushbutton,
- an ELT ON indicator light,
- a two-position ON/ARMED switch with safety cover (flip guard). The safety cover forces the switch to ARMED position. This switch must always remain in this position, except in the case of manual distress triggering.

The beacon is integrated in the aircraft as far aft as possible and so it must be connected to the remote control unit. This remote control unit enables beacon operation to be forced to ON, to be tested (TEST) or shutdown and restore in standby or ARMED mode (RESET) in the event of an untimely triggering of the ELT, from the aircraft cockpit.

(g) External antenna

An external antenna is recommended to be installed on the fuselage of the aircraft to maximize transmission of the distress signal to the satellites.

The cable lenght should remain as short as possible in order to RF keep losses as close as possible to 0.5 to 1 dB at each frequencies (121.5/243/406.028 MHz).

4. INSTALLATION OF THE ELT ADT 406 AP

A. General

System security and reliability obviously depends on the standard of installation.

In order to ensure installation of the highest standard, the installation operations must be :

- performed in conformity with this document,
- performed in compliance with the current regulations,
- performed by qualified personnel,
- performed so that :
  - the aircraft's structural integrity is not affected,
  - it will not hinder the pilot in normal position,
  - it will not cause any damage in the event of an accident,
  - it will not prevent or modify operation of the other safety systems.
    If in doubt, contact the aircraft manufacturer or its representative,
- inspected by representative authority.

B. Installation of the beacon on the aircraft (Ref. Fig. 4)

In the case of use in automatic mode, the beacon shall be installed in the rear of the aircraft in order to maximize the probability of ELT survival in case of crash. However, it can be installed in another position in survival mode.

The activation / identification module DIRECTION OF FLIGHT must be parallel with the aircraft flight axis as indicated by the beacon's label. The activation / identification module direction and the A/C forward/aft directions must be respected to ensure correct acceleration sensor (G.switch) operation (See Fig. 4).

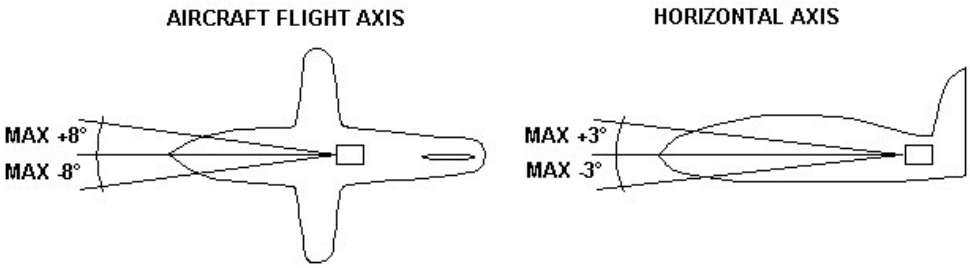

NOTE : An angle of up to ± 8° from the aircraft flight axis could be allowed.
An angle of up to ± 3° from the aircraft horizontal axis could be allowed.

Tolerances on the Axis for Installation of the ELT ADT 406 AP

Figure 4

The beacon can be installed in any position (normal, upside down, right side, left side) with respect with the G-Switch activation direction stated on figure 4.

The activation / identification assy of the beacon can be installed in four positions. Three alignment pins on the beacon board allow to set it in the required position. A cap is installed in one of the four holes of the activation / identification assy who is unused.
This cap shall be assigned upon the initial installation and will keep this position in memory for further beacon replacement.

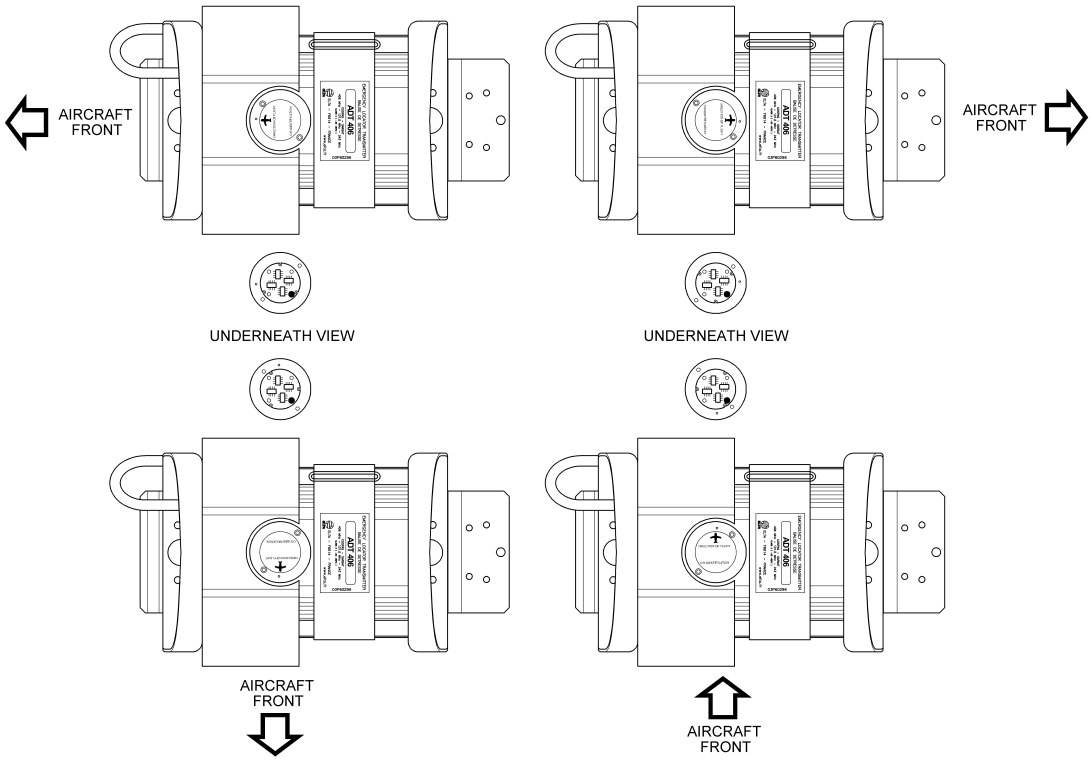

Unstowed objects must be not able to impact the beacon.

Attach the beacon to the fuselage of the aircraft by means of four M4 bolts. Four 5 mm diameter holes at the corners of a 210 mm x 45 mm rectangle are drilled in the beacon. Particular care must be taken with this attachment. Standard industry means must be used to lock the screws. Use flat washer in order to avoid paint damage.

The attachment points are similar to those of the ADT 406 AF/AP beacon.

The figure 5 shows the drilling pattern dimensions and determine the required area to access to the beacon controls and connectors.

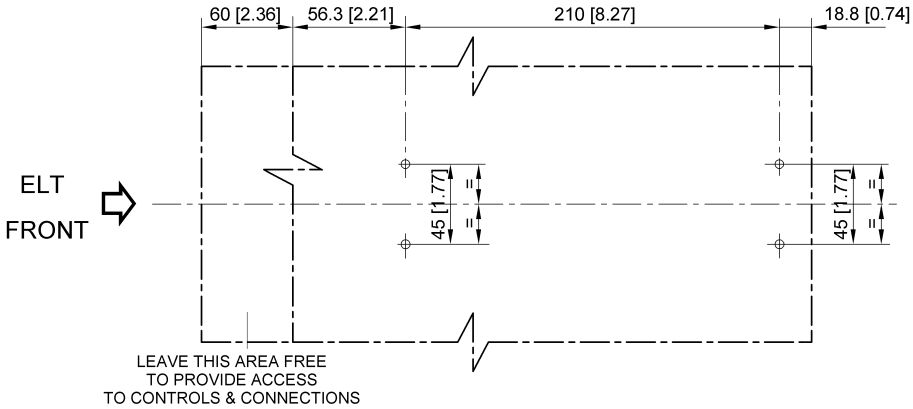

ELTA Recommendation

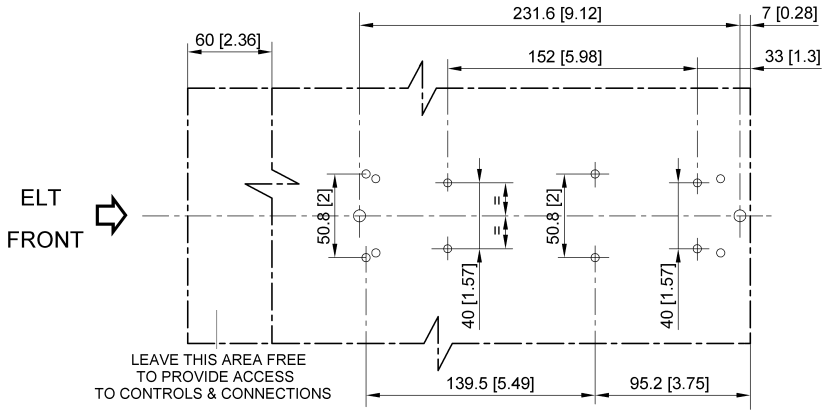

Optional for Other Beacon Retrofit

Installation of the ELT ADT 406 AP - Drilling Pattern Dimensions

Figure 5

C. External antenna installation

This antenna should be approved by ELTA.
ELTA recommend to use P/N 25988 (antenna model 2624-82 manufactured by CHELTON)

The external antenna must be installed on the upper part of the fuselage, as far aft as possible.

Particular care must be taken with this attachment. Standart industry means must be used to lock the screws.

The contact surface should be reinforced to prevent the antenna from tearing away at high speeds.

The cable used shall be of a high quality with very low losses.

RG 142 cable type is recommended with a length lower than 2 meters to keep losses close to 0.5 dB.

Connect the connector to the antenna and to the EXT. ANT. access on ELT, and install the coaxial cable. This cable must be fixed to rigid aircraft structure all along its routing, and it should be as short as possible to avoid Radio Frequency losses and/or cable destruction in case of crash.

D. Remote control unit installation

The ELT ADT 406 AP can be remotely controlled by using a remote control panel installed in the cockpit of the aircraft.

The maximum length of this link is 200 meters and requires no grounded cable. The link requires 4 wires.

The following simplified diagram shows the wiring between the ELT ADT 406 AP and its peripherals :

– The Remote Control Panel (in cockpit) identified as "RCP",
– the external antenna noted as "EA",
– the whip antenna noted as "BA".

The EA is connected to the ELT ADT 406 AP BNC female connector (5).

The BA is connected to the ELT ADT 406 AP TNC female connector (1).

The RCP is connected to the ELT ADT 406 AP high density 15 pins female connector (3).
ELTA recommend to use P/N 16243 for RCP connector and P/N 231 plus 232 for ELT.

A three position guarded switch (2) controls the ELT ADT 406 AP.

A red indicator (4) displays the ELT ADT 406 AP state.

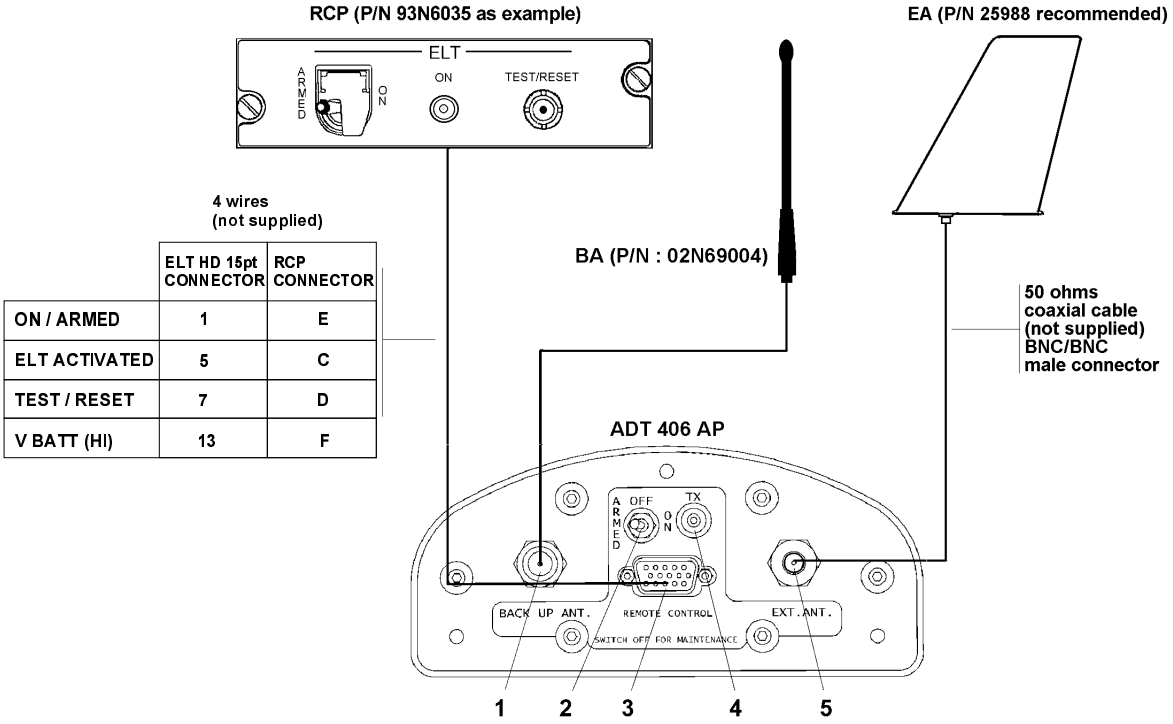

	ELT HD 15pt CONNECTOR	RCP CONNECTOR
ON / ARMED	1	E
ELT ACTIVATED	5	C
TEST / RESET	7	D
V BATT (HI)	13	F

ADT 406 AP Beacon Installation

Figure 6

E. Installation and configuration of the beacon (Ref. Fig. 5)

(1)Installation in automatic mode

<u>CAUTION</u> : TO BE OPERATIONAL, THE BEACON SHALL BE IN "ARMED" POSITION ONCE IT HAS BEEN CORRECTLY INSTALLED.

Connect the antenna cable to the EXT. ANT. connector.

Switch the Remote Control ON/ARMED lockable toggle switch to "ARMED" on remote control panel.

Connect the remote control unit cable to the REMOTE CONTROL connector on ELT and lock it.

Connect the remote control unit cable rear of the remote control panel and lock it.

Switch the Beacon ARMED/OFF/ON lockable toggle switch to ARMED (pull and slide), the system is ready for use.

Note : the beacon can be used in automatic mode with neither RCP nor external antenna.

<u>CAUTION</u> : AS SOON AS THE BEACON IS IN ARMED IT CAN BE AUTOMATICALLY ACTIVATED BY THE INTERNAL G-SWITCH.

(2)Installation in survival mode

Connect the whip back up antenna to ELT.

The switch shall be on OFF.

5. UTILIZATION OF THE ELT ADT 406 AP (Ref. Fig. 7)

***CAUTION* : IN THE EVENT OF UNTIMELY BEACON ACTIVATION, SHUTDOWN THE BEACON AND INFORM THE CLOSEST SEARCH AND RESCUE (SAR) OR AIRPORT CONTROL TOWER IMMEDIATELY.**

The ELT ADT 406 can be activated in two modes :

– automatic when the acceleration sensor is triggered,
– manual.

A. Automatic activation

The acceleration sensor has detected an impact sufficient to trigger it. The indicator light (11) and the aural indicator indicate beacon activation.

If the aircraft has to be evacuated, refer paragraph B.(2) second case. Otherwise do not do anything and leave the beacon in operation until the rescue team arrives.

B. Manual activation

There are two cases in which a distress signal may be triggered manually :

– the acceleration sensor (G.switch) has not been triggered but a distress signal must be sent (injured passengers, aircraft out of operation ...),
– the aircraft is on the ground and must be evacuated.

(1)First case, from the Remote Control

Raise the safety cover (guard) on the remote control unit and place the switch in the ON position (lever upwards).

An automatic self-test sequence is performed.

Then the indicator light (11) and the aural indicator indicate beacon activation. This signal is permanently displayed on the Remote Control LED.

Do not do anything and leave the beacon in operation until the rescue team arrives.

(2)Second case, from the beacon

Place the beacon switch (12) in the ON position (pull and slide).

An automatic self-test sequence is performed.

Then the beacon enter in a waiting condition for about 30s. This state is displayed by flashing on indicator light (10) 1.75 s ON, 0.25 s OFF. This delay will avoid unwanted activation (false manoeuvre).

Then the indicator light (11) and the aural indicator indicate beacon activation. The actual distress signal is transmitted. This state is displayed by flashing on indicator light : 0.5 s ON, 0.5 s OFF.

If the aircraft has to be evacuated, Follow the instructions :

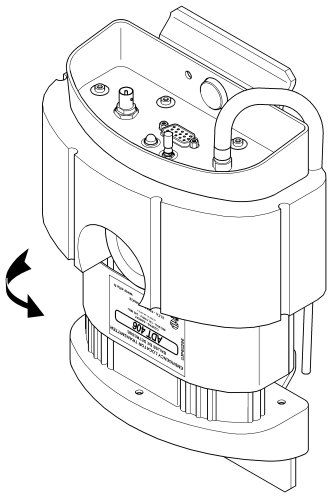

- unfasten the strap (and the cable if relevant),

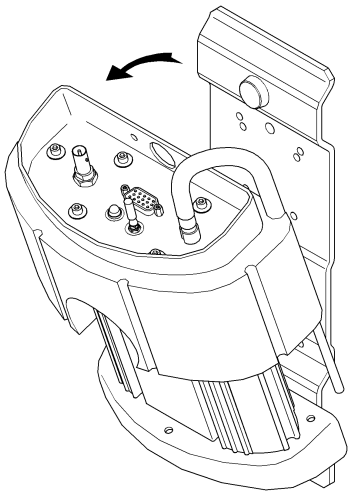

- remove the beacon from its bracket, pull firmly to brake the retaining metallic strap (14, Ref. Fig. 7).

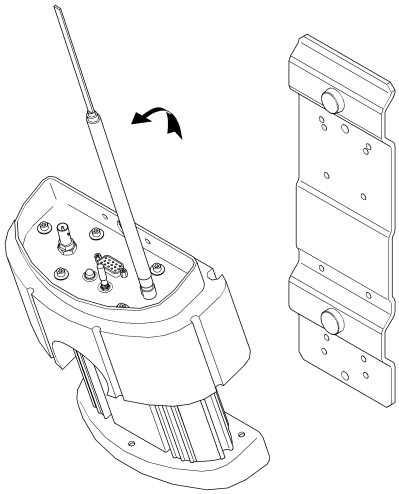

- extend the antenna and take the beacon with you.

C. Beacon shutdown

In the event of a false manoeuvre or untimely operation, shutdown the beacon.

The beacon is shutdown by pressing the RESET/TEST pushbutton on the remote control unit. This control is not active during the self test sequence or if the ON/ARMED switch is in ON position.

NOTE : Stopping distress signal transmission by means of the remote control unit does not switch the beacon OFF. It is restored in ARMED mode.

Acknowledgment of the control is displayed by 2 short blink on LED and buzzer.

***CAUTION* : THE BEACON MUST BE SHUTDOWN BEFORE ANY MAINTENANCE OPERATIONS ARE PERFORMED.**
THE BEACON MUST BE COMPLETELY SHUTDOWN BEFORE IT IS REMOVED AND IT'S ARMED/OFF/ON TOGGLE SWITCH SHALL BE IN OFF POSITION.

D. Beacon self-test

***CAUTION* : THE SELF-TEST SHALL BE PERFORMED WITHIN THE FIRST 5.MN OF ANY HOUR BECAUSE THE ELT IS SENDING 121.5 MHZ SIGNAL FOR 5 S DURING THIS PROCESS (LIMITATION OF FALSE ALERT).**

The ELT ADT 406 AP is designed to perform a self-test, from the remote control unit, or as soon as the beacon is started up manually.
Actual test transmission on 121.5 MHz for 5 s can be listen on any VHF receiver.

(1)Self-test on the beacon

***CAUTION* : THIS SELF- TEST PROCESS SHALL NOT BE INTERUPTED**
IF THIS PROCESS IS NOT COMPLETE FOR ANY REASON PERFORM A NEW COMPLETE SELF-TEST

Note : in case of use in survival mode without external antenna, the self-test will indicate an antenna failure, but the beacon will transmit normally on its emergency antenna.

Place the beacon's ARMED/OFF/ON toggle switch (12) in ON position.

After two short blinks and a delay of 3 s, check that the indicator light (11) comes ON and the beacon's buzzer sounds during 6s.

After a brief blink the self-test report is display :

- 10 s permanent illumination of the indicator light (11) for correct operation,
- 10 s blinking condition of the indicator light (11) for failure detection.
  Blinking rate indicates the failure source detection as follow :
  . 125 ms ON, 125 ms OFF (Frequency 4 Hz), ELT Check Sum failure (software problem)
  . 250 ms ON, 250 ms OFF (Frequency 2 Hz), ELT power failure (UHF and/or VHF)
  . 500 ms ON, 500 ms OFF (Frequency 1 Hz), Ext. Antenna connection failure or signal identification missing.

Then the beacon enter in a waiting condition for 30 s (rate : 1.75s ON; 0.25s OFF). During this state return the switch (12) to ARMED position.

<u>CAUTION</u> : OPERATOR SHALL SWITCH OFF OR ARMED THE ELT WITHIN 30 S AFTER SELF-TEST REPORT TO AVOID REAL DISTRESS TRANSMISSION.

(2)Self-test by means of the remote control unit

The beacon's ARMED/OFF/ON toggle switch (12) must be in ARMED position.

The Remote Control ARMED/ON must be in ARMED position.

Press the RESET/TEST pushbutton until the two acknowlegment blink on LED.

Then, after a delay of approximately 6 second, the self test is displayed on the Remote Control Unit LED.

- 10 s permanent illumination for correct operation,
- 10 s blinking condition for failure detection.
  Blinking rate indicates the failure source detection as follow :
  . 125 ms ON, 125 ms OFF (Frequency 4 Hz), ELT Check Sum failure (software problem)
  . 250 ms ON, 250 ms OFF (Frequency 2 Hz), ELT power failure (UHF and/or VHF)
  . 500 ms ON, 500 ms OFF (Frequency 1 Hz), Ext. Antenna connection failure or signal identification missing.

NOTE : On the beacon, after the two short blinks, the indicator light (11) comes ON and the buzzer sounds during 6 seconds. This is the self-test process. Then the self-test report is indicated as it is done for the Remote Control Unit LED.

<u>CAUTION</u> : THE ELT SHALL BE IN ARMED POSITION. IF NOT REMOTE CONTROL WILL NOT OPERATE (TEST/RESET ON).

6. MAINTENANCE OF THE ELT ADT 406 AP

A. Beacon self-test

The manufacturer recommends that a beacon self-test should be performed regularly. The highest rate is one per day. Normally this task is added to other periodic maintenance task such a "A" check. In all events the user must comply with the applicable regulations in the country concerned governing the self-test period.

The self-test must only be performed when the order to do so is given or by the competent authorities.

A higher rate of self-test will reduce the 5 years battery servicing.

***CAUTION* : THE SELF-TEST PROCEDURE (PARAGRAPH 5.D.) MUST BE RESPECTED TO AVOID UNTIMELY BEACON ACTIVATION.**

B. Maintenance periodicity table

Periodicity	Operations	Operator
5 years	Replacement of batteries	ELTA or approved agent/airline
5 years	General overhaul in specialized workshop	ELTA or approved agent/airline

C. Batteries replacement

***CAUTION* : THE BATTERY PACK SHALL BE APPROVED BY ELTA. IF OTHER PACK ARE USED ELTA WILL CANCEL WARRANTY AND WILL REFUSE ANY RESPONSIBILITY ON THE PRODUCT OPERATION / MISFUNCTION.**

***CAUTION* : THE BATTERIES USED CANNOT BE RECHARGED. DO NOT TRY TO OPEN OR RECHARGE THEM.**

Next battery servicing date is indicated on a label stuck on the back face of ADT 406 AP.

The old batteries must be replaced with new batteries of a model approved by ELTA P/N 02N60052 (battery servicing for one ELT) or 02N60053 (battery servicing for ten ELTs).

ELTA recommends that the ELT ADT 406 AP should undergo a general overhaul on its test and programming bench at this occasion.

Refer to CMM 25-60-10 for detail of operation.

D. Batteries discarding

The batteries must be discarded in compliance with the applicable regulations in the country concerned.

NOTE : The type of battery used is not dangerous for the environment provided that it is completely discharged.

Contact ELTA for getting additional discarding information.

E. Test to do at the time of a beacon return in workshop

Perfoms the following tests described in CMM 25-60-10 :

- visual check,
- test of acceleration sensor automatic triggering,
- functional test of ADT 406 AP beacon,
- RF test on the operational frequencies 121.5 – 243 – 406 MHz.

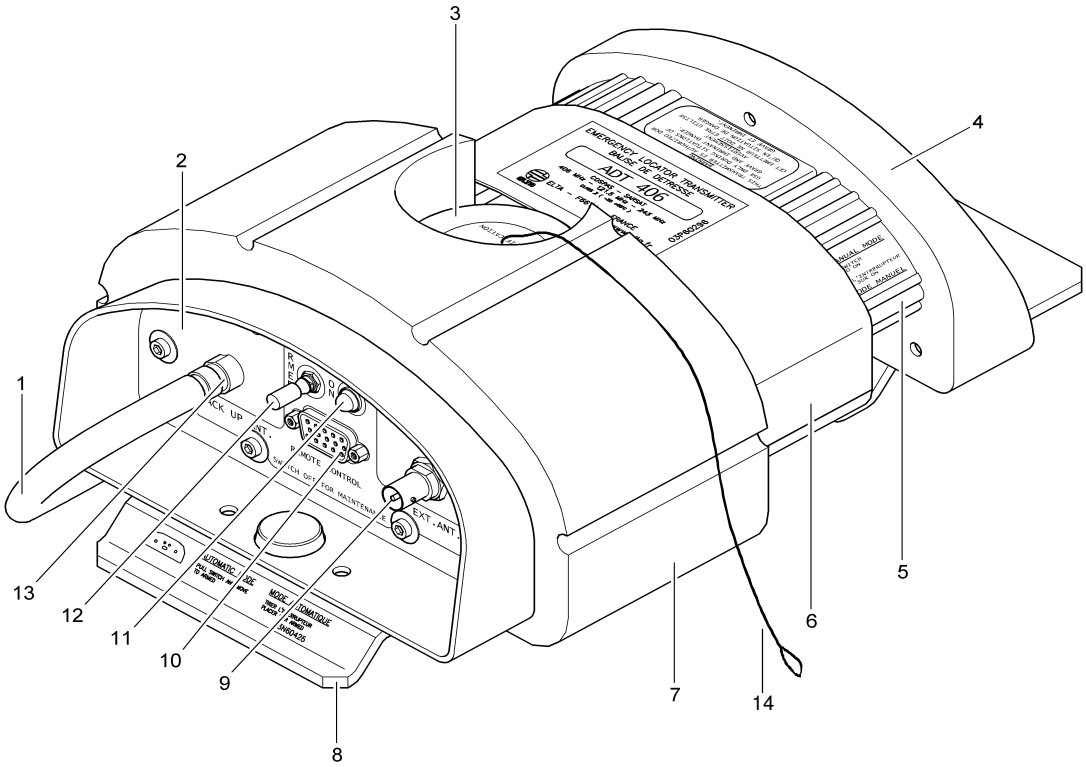

2 – FRONT FACE
3 – ACTIVATION/IDENT ASSY
4 – BACK FACE
5 – MACHINED SECTION
6 – STRAP
7 – FLOAT
8 – SUPPORT
9 – EXT. ANT. BNC CONNECTOR (FEMALE)
10 – REMOTE CONTROL CONNECTOR(FEMALE HD 15 PINS)
11 – TX LED
12 – ARMED/OFF/ON TOGGLE AND GUARDED SWITCH
13 – BACK UP ANT. TNC CONNECTOR (FEMALE)
14 – METALIC STRAP.

ELT ADT 406 AP – Detailed Description

Figure 7

COSPAS-SARSAT
TYPE APPROVAL CERTIFICATE

For a 406 Megahertz Distress Beacon for use with the Cospas-Sarsat Satellite System

WHEREAS, ***ELTA*** of ***Toulouse, France,*** the manufacturer of a 406 Megahertz Distress Beacon packaged as an ***ELT***, and identified as Model: ***ADT406 AF/AP***[1] has submitted test data and had said beacon tested in ***October 2001 - June 2002*** at a facility accepted by Cospas-Sarsat at ***Intespace, Toulouse, France,*** to demonstrate that said beacon meets the applicable technical requirements for use with the Cospas-Sarsat Satellite System, as defined in documents C/S T.001", Issue 3 - Rev. 3, October 1999, and C/S T.007 "Cospas-Sarsat 406 MHz Distress Beacon Type Approval Standard", Issue 3 - Rev. 7, October 2000,[2] for frequency channel ***406.028*** MHz;

WHEREAS, the Cospas-Sarsat Council has determined, following a review of the test results, that the said beacon meets the Cospas-Sarsat Class 2 requirements and is rated for operating over the temperature range of ***-20 °C to +55 °C,***[3] with battery:

FRIWO (M20HR) or Ultralife (U3360HCES)
Lithium Manganese Dioxide ($LiMnO_2$, 2 X 2D-cells) and

WHEREAS, said manufacturer has certified that all other units of the same type will meet said technical requirements in a similar manner to the unit subjected to test, which incorporated the following features:

- ***121.5 and 243MHz Auxiliary radio locating devices (selectable 100/200 mW, continuous)***
- ***Automatic Activation***
- ***Self-test mode (one burst of 440 ms)***
- ***Remote control unit***
- ***Back up antenna***[4]

1) beacon is approved for use with 2624-82 Chelton blade antenna
2) beacon is approved for use with all short format user protocol coding options applicable to ELTs
3) specified operating lifetime 24 hours
4) back up antenna was not tested to full requirements of C/S T.007

NOW, THEREFORE, in reliance upon the following, the Cospas-Sarsat Council does hereby certify that the 406 MHz Distress Beacon Model identified herein is compatible with the Cospas-Sarsat System as of the date of this Certificate.

Certificate No: ***131***

Date: ***15 July 2002***

Signed by:

D. Levesque
Head of Cospas-Sarsat Secretariat

NOTE, HOWEVER:

1. This certificate does not authorize the operation or sale of any 406 MHz distress beacon. Such authorization may require type acceptance by national administrations in countries where the beacon will be distributed, and may also be subject to national licensing requirements.

2. This certificate is intended only as a formal notification to the above identified manufacturer that the Cospas-Sarsat Council has determined, on the basis of test data of a beacon submitted by the manufacturer, that 406 MHz distress beacons of the type identified herein meet the standards for use with the Cospas-Sarsat System. This certificate is not a warranty and Cospas-Sarsat hereby expressly disclaims any and all liability arising out of or in connection with the issuance, use, or misuse of this certificate.

3. This certificate is subject to revocation by the Cospas-Sarsat Council should the beacon type for which it is issued cease to meet the Cospas-Sarsat specification. A new certificate may be issued after satisfactory corrective action has been taken and correct performance demonstrated in accordance with to the Cospas-Sarsat Type Approval Standard.

Liberté • Égalité • Fraternité
RÉPUBLIQUE FRANÇAISE

DIRECTION
GENERALE
DE L'AVIATION CIVILE

Membre des Joint Aviation Authorities

JOINT TECHNICAL STANDARD ORDER AUTHORISATION

Numéro : F.O. 112

Number

Conformément à la réglementation nationale en vigueur et dans les conditions indiquées ci-après, la Direction Générale de l'Aviation Civile en accord avec les procédures JAA concernant les autorisations JTSO atteste par le présent certificat que

Pursuant to the national regulations for the time being in force and subject to the conditions specified below, the Direction Générale de l'Aviation Civile in accordance with JAA procedures for JTSO Authorisation hereby certifies

ELTA
14 Place Marcel DASSAULT
B.P. 48
31702, BLAGNAC CEDEX
France
(POA F.G.029 du 15/12/98)

est autorisé d'identifier les articles ci-dessous par le(s) marquage(s) JTSO indiqué(s) pour :
is authorised to identify the following article(s) with the indicated JTSO marking(s) for :

Modèle	P/N	Désignation/JTSO
ADT 406 AP	01N6591 (x)(x)	**RBDA tri-fréquences Auto. Portable et Survie** *Portable & Survival tri -frequency automatic ELT* **JTSO-2C91a, JTSO-2C126**
ADT 406 AP	02N60051 (x)	**Support** *Mounting Bracket* **JTSO-2C91a, JTSO-2C126**
ADT 406 AP	02N69004 (x)	**Antenne fouet** *Whip Antenna* **JTSO-2C91a, JTSO-2C126**

(DDP N° 02E68871 du 03/03/03)

CONDITIONS :

1. **Le détenteur de cette autorisation JTSO ne peut identifier son équipement avec ce marquage JTSO s'il n'est plus en conformité avec la réglementation française ou les procédures JAA concernant les autorisations JTSO,**
   The JTSO Authorisation Holder cannot identify an article with this JTSO marking if he does not remain in compliance with the French regulation or with JAA procedures for JTSO Authorisation
2. **Sous réserve de satisfaire à la condition précédente, cette autorisation reste valide sauf si elle a été restituée, suspendue ou retirée.**
   Subject to compliance with the foregoing condition, this approval shall remain valid unless the approval has been surrendered, suspended or revoked.

Date d'émission : 29-avr-03
Date of issue

L'Ingénieur en Chef de l'Armement
Chef du Bureau "Moteurs, hélices et équipements"
Pour le Ministre chargé de l'Aviation Civile
Francis PAGEGALTIER

U.S. Department of Transportation
Federal Aviation Administration

AIRCRAFT CERTIFICATION STAFF
c/o American Embassy
27, Boulevard du Regent
B-1000 Brussels, Belgium

June 12, 2003

In reply refer to: GE/vk/06/12/03: 0073-03

Post-it® Fax Note 7671	Date 26/06	# of pages ▸ 2+2
To Jacques Houget	From Vera Kindermann	
Co./Dept. DGAC	Co. FAA	
Phone #	Phone #	
Fax # 33-1-58094319	Fax # 32-2-230 68.99	

Mr. Jacques Houget
Direction Generale de l'Aviation Civile
50, rue Henry Farman
F-75720 Paris Cedex 15
France

Dear Mr. Houget:

This letter refers to ELTA letter Ref. 03B62956, dated May 12, 2003, by which they made application for Technical Standard Order (TSO) design approval. This letter also acknowledges receipt of ELTA Statement of Conformance and of DGAC France letter Ref. 2003/1698, dated May 20, 2003, certifying in accordance with FAR 21.617, that the Emergency Locator Transmitters (ELT) listed below comply with the requirements of TSO C91a and TSO C126, as designated in FAR 21.305(b).

Based on the DGAC France certification and receipt of the required data, we hereby accept ELTA, TSO design approval to include the Emergency Locator Transmitters (ELT) listed below for manufacture at ELTA, located at 14 Place Marcel Dassault, BP 48, 31702 Blagnac Cedex, France.

Part Number	Description
P/N 01N6591( )	Portable and Survival Tri-Freq. Automatic ELT (Model ADT 406 AP)
P/N 02N60051( )	Mounting Bracket (Model ADT 406 AP)
P/N 02N69004( )	Whip Antenna (Model ADT 406 AP)

This letter of TSO design approval, together with the DGAC France Certificate of Airworthiness for Export, will authorize ELTA, to identify the Emergency Locator Transmitters (ELT) with the TSO marking requirements described in FAR 21.607(d) and in TSO C91a and TSO C126 and is issued in accordance with FAR 21.617, governing issuance of TSO design approval for import appliances. Each item must be accompanied by a Certificate of Airworthiness for Export issued by the DGAC France or a duly authorized designee/organization (FAR 21.502(a)).

Deviation:
The requested Automatic activation acceleration threshold specified to 2 ± 0.3 g (1.7 g to 2.3 g) is increased by 0.3 g to obtain 2.3 ± 0.3 g (2.0 to 2.6 g).

Any further deviations from the established design approval should be accomplished in accordance with FAR 21.609. The request for approval to deviate, together with all pertinent data, should be submitted to the Federal Aviation Administration (FAA) through the LBA and should contain information to show that the particular deviation is compensated for by factors or design features providing an equivalent level of safety.

The following statement must be furnished with each manufactured unit: "The conditions and tests required for TSO approval of this article are minimum performance standards. It is the responsibility of those desiring to install this article either on or within a specific type or class of aircraft to determine that the aircraft installation conditions are within the TSO standards. If not within the TSO standards, the article may be installed only if further evaluation by the applicant documents an acceptable installation and is approved by the Administrator."

A letter of TSO design approval issued under FAR 21.617 is not transferable and is effective until surrendered, withdrawn or otherwise terminated by the FAA (FAR 21.621).

The FAA may, upon notice, withdraw the letter of TSO design approval of any manufacturer who identifies with a TSO marking any article not meeting the performance standards of the applicable TSO (FAR 21.619). The DGAC France airworthiness certification is essential to the determination that the item meets the performance standards of the applicable TSO.

If there are any questions, please feel free to have your staff contact Gregory A. Edwards, (Tel.: 322.508.2714).

Sincerely,

Thomas A. Boudreau
Manager, Aircraft Certification Staff
FAA-Brussels

Reference: GE/vk/06/12/03: 0073-03

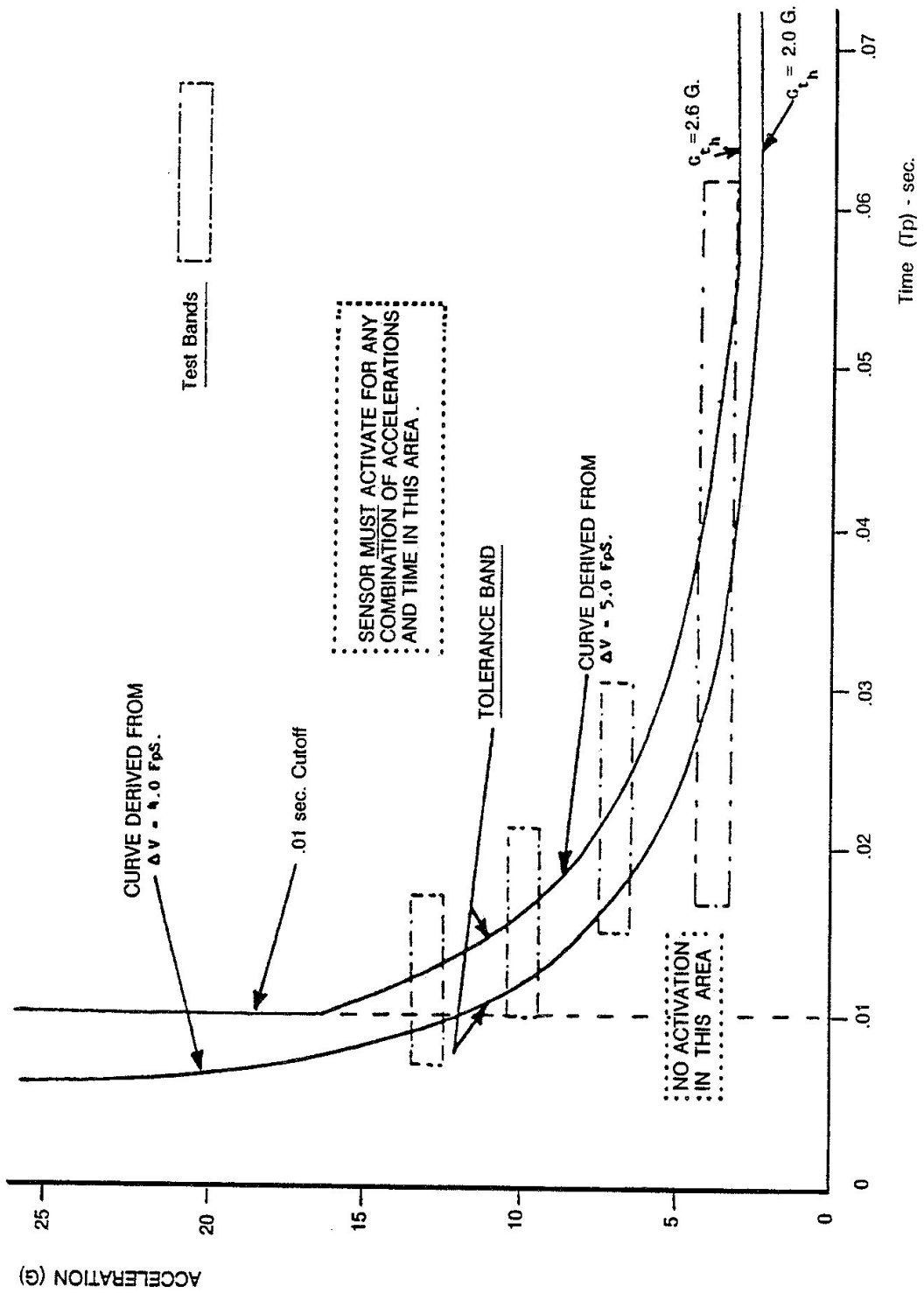

Crash Sensor Response Curve

LOG BOOK

FACTORY SETTING

NEXT BATTERY SERVICING ……../……. (MM/YYYY)

LOG BOOK

FACTORY SETTING

LOG BOOK

ENCODING UPDATE FORM

REGISTRATION COUNTRY: ELT SERIAL NUMBER:

PROTOCOL: ELT S/N ☐ A/C OP-DESIGNATOR + S/N ☐

A/C 24 Bit Address ☐ A/C REG. MARK ☐ TEST ☐

C/S 15 HEX:

SIMPLIFIED DEC:

A/C MSN: A/C OR A/P TYPE: FINAL OPERATOR:
CONTACT (PHONE, email…):

ISSUED BY:

DATE: ……/……/…… (MM/DD/YYYY)

SIGNATURE AND STAMP:

NOTE : Attach the encoding update sheet issued from the ELTA encoding tool.

REGISTRATION COUNTRY: ELT SERIAL NUMBER:

PROTOCOL: ELT S/N ☐ A/C OP-DESIGNATOR + S/N ☐

A/C 24 Bit Address ☐ A/C REG. MARK ☐ TEST ☐

C/S 15 HEX:

SIMPLIFIED DEC:

A/C MSN: A/C OR A/P TYPE: FINAL OPERATOR:
CONTACT (PHONE, email…):

ISSUED BY:

DATE: ……/……/…… (MM/DD/YYYY)

SIGNATURE AND STAMP:

NOTE : Attach the encoding update sheet issued from the ELTA encoding tool.

LOG BOOK

ENCODING UPDATE FORM

REGISTRATION COUNTRY: ELT SERIAL NUMBER:

PROTOCOL: ELT S/N ☐ A/C OP-DESIGNATOR + S/N ☐

A/C 24 Bit Address ☐ A/C REG. MARK ☐ TEST ☐

C/S 15 HEX:

SIMPLIFIED DEC:

A/C MSN: A/C OR A/P TYPE: FINAL OPERATOR:
CONTACT (PHONE, email…):

ISSUED BY:

DATE: ……/……/…… (MM/DD/YYYY)

SIGNATURE AND STAMP:

NOTE : Attach the encoding update sheet issued from the ELTA encoding tool.

REGISTRATION COUNTRY: ELT SERIAL NUMBER:

PROTOCOL: ELT S/N ☐ A/C OP-DESIGNATOR + S/N ☐

A/C 24 Bit Address ☐ A/C REG. MARK ☐ TEST ☐

C/S 15 HEX:

SIMPLIFIED DEC:

A/C MSN: A/C OR A/P TYPE: FINAL OPERATOR:
CONTACT (PHONE, email…):

ISSUED BY:

DATE: ……/……/…… (MM/DD/YYYY)

SIGNATURE AND STAMP:

NOTE : Attach the encoding update sheet issued from the ELTA encoding tool.

LOG BOOK

ENCODING UPDATE FORM

REGISTRATION COUNTRY: ELT SERIAL NUMBER:

PROTOCOL: ELT S/N ☐ A/C OP-DESIGNATOR + S/N ☐

A/C 24 Bit Address ☐ A/C REG. MARK ☐ TEST ☐

C/S 15 HEX:

SIMPLIFIED DEC:

A/C MSN: A/C OR A/P TYPE: FINAL OPERATOR:
CONTACT (PHONE, email…):

ISSUED BY:

DATE: ……/……/…… (MM/DD/YYYY)

SIGNATURE AND STAMP:

NOTE : Attach the encoding update sheet issued from the ELTA encoding tool.

REGISTRATION COUNTRY: ELT SERIAL NUMBER:

PROTOCOL: ELT S/N ☐ A/C OP-DESIGNATOR + S/N ☐

A/C 24 Bit Address ☐ A/C REG. MARK ☐ TEST ☐

C/S 15 HEX:

SIMPLIFIED DEC:

A/C MSN: A/C OR A/P TYPE: FINAL OPERATOR:
CONTACT (PHONE, email…):

ISSUED BY:

DATE: ……/……/…… (MM/DD/YYYY)

SIGNATURE AND STAMP:

NOTE : Attach the encoding update sheet issued from the ELTA encoding tool.

LOG BOOK

ENCODING UPDATE FORM

REGISTRATION COUNTRY: ELT SERIAL NUMBER:

PROTOCOL: ELT S/N ☐ A/C OP-DESIGNATOR + S/N ☐

A/C 24 Bit Address ☐ A/C REG. MARK ☐ TEST ☐

C/S 15 HEX:

SIMPLIFIED DEC:

A/C MSN: A/C OR A/P TYPE: FINAL OPERATOR:
CONTACT (PHONE, email…):

ISSUED BY:

DATE: ……/……/…… (MM/DD/YYYY)

SIGNATURE AND STAMP:

NOTE : Attach the encoding update sheet issued from the ELTA encoding tool.

REGISTRATION COUNTRY: ELT SERIAL NUMBER:

PROTOCOL: ELT S/N ☐ A/C OP-DESIGNATOR + S/N ☐

A/C 24 Bit Address ☐ A/C REG. MARK ☐ TEST ☐

C/S 15 HEX:

SIMPLIFIED DEC:

A/C MSN: A/C OR A/P TYPE: FINAL OPERATOR:
CONTACT (PHONE, email…):

ISSUED BY:

DATE: ……/……/…… (MM/DD/YYYY)

SIGNATURE AND STAMP:

NOTE : Attach the encoding update sheet issued from the ELTA encoding tool.

LOG BOOK

ENCODING UPDATE FORM

REGISTRATION COUNTRY: ELT SERIAL NUMBER:

PROTOCOL: ELT S/N ☐ A/C OP-DESIGNATOR + S/N ☐

A/C 24 Bit Address ☐ A/C REG. MARK ☐ TEST ☐

C/S 15 HEX:

SIMPLIFIED DEC:

A/C MSN: A/C OR A/P TYPE: FINAL OPERATOR:
CONTACT (PHONE, email…):

ISSUED BY:

DATE: ……/……/…… (MM/DD/YYYY)

SIGNATURE AND STAMP:

NOTE : Attach the encoding update sheet issued from the ELTA encoding tool.

REGISTRATION COUNTRY: ELT SERIAL NUMBER:

PROTOCOL: ELT S/N ☐ A/C OP-DESIGNATOR + S/N ☐

A/C 24 Bit Address ☐ A/C REG. MARK ☐ TEST ☐

C/S 15 HEX:

SIMPLIFIED DEC:

A/C MSN: A/C OR A/P TYPE: FINAL OPERATOR:
CONTACT (PHONE, email…):

ISSUED BY:

DATE: ……/……/…… (MM/DD/YYYY)

SIGNATURE AND STAMP:

NOTE : Attach the encoding update sheet issued from the ELTA encoding tool.

LOG BOOK

ENCODING UPDATE FORM

REGISTRATION COUNTRY: ELT SERIAL NUMBER:

PROTOCOL: ELT S/N ☐ A/C OP-DESIGNATOR + S/N ☐

A/C 24 Bit Address ☐ A/C REG. MARK ☐ TEST ☐

C/S 15 HEX:

SIMPLIFIED DEC:

A/C MSN: A/C OR A/P TYPE: FINAL OPERATOR:
CONTACT (PHONE, email…):

ISSUED BY:

DATE: ……/……/…… (MM/DD/YYYY)

SIGNATURE AND STAMP:

NOTE : Attach the encoding update sheet issued from the ELTA encoding tool.

REGISTRATION COUNTRY: ELT SERIAL NUMBER:

PROTOCOL: ELT S/N ☐ A/C OP-DESIGNATOR + S/N ☐

A/C 24 Bit Address ☐ A/C REG. MARK ☐ TEST ☐

C/S 15 HEX:

SIMPLIFIED DEC:

A/C MSN: A/C OR A/P TYPE: FINAL OPERATOR:
CONTACT (PHONE, email…):

ISSUED BY:

DATE: ……/……/…… (MM/DD/YYYY)

SIGNATURE AND STAMP:

NOTE : Attach the encoding update sheet issued from the ELTA encoding tool.

LOG BOOK

MAINTENANCE TASKS

FINAL OPERATOR:

TYPE OF MAINTENANCE: BATTERY SERVICING ☐ INSPECTION ☐ REPAIR ☐

RF TEST ☐

TASK DESCRIPTION:

NEXT BATTERY SERVICING: ……/…… (MM/YYYY)

DATE: ……/……/…… (MM/DD/YYYY)

REPAIR STATION:

SIGNATURE AND STAMP:

NOTE : Attach the RF test sheet issued from the ELTA test tool.

FINAL OPERATOR:

TYPE OF MAINTENANCE: BATTERY SERVICING ☐ INSPECTION ☐ REPAIR ☐

RF TEST ☐

TASK DESCRIPTION:

NEXT BATTERY SERVICING: ……/…… (MM/YYYY)

DATE: ……/……/…… (MM/DD/YYYY)

REPAIR STATION:

SIGNATURE AND STAMP:

NOTE : Attach the RF test sheet issued from the ELTA test tool.

LOG BOOK

MAINTENANCE TASKS

FINAL OPERATOR:

TYPE OF MAINTENANCE: BATTERY SERVICING ☐ INSPECTION ☐ REPAIR ☐

RF TEST ☐

TASK DESCRIPTION:

NEXT BATTERY SERVICING: ……/…… (MM/YYYY)

DATE: ……/……/…… (MM/DD/YYYY)

REPAIR STATION:

SIGNATURE AND STAMP:

NOTE : Attach the RF test sheet issued from the ELTA test tool.

FINAL OPERATOR:

TYPE OF MAINTENANCE: BATTERY SERVICING ☐ INSPECTION ☐ REPAIR ☐

RF TEST ☐

TASK DESCRIPTION:

NEXT BATTERY SERVICING: ……/…… (MM/YYYY)

DATE: ……/……/…… (MM/DD/YYYY)

REPAIR STATION:

SIGNATURE AND STAMP:

NOTE : Attach the RF test sheet issued from the ELTA test tool.

LOG BOOK

MAINTENANCE TASKS

FINAL OPERATOR:

TYPE OF MAINTENANCE: BATTERY SERVICING ☐ INSPECTION ☐ REPAIR ☐

RF TEST ☐

TASK DESCRIPTION:

NEXT BATTERY SERVICING: ……/…… (MM/YYYY)

DATE: ……/……/…… (MM/DD/YYYY)

REPAIR STATION:

SIGNATURE AND STAMP:

NOTE : Attach the RF test sheet issued from the ELTA test tool.

FINAL OPERATOR:

TYPE OF MAINTENANCE: BATTERY SERVICING ☐ INSPECTION ☐ REPAIR ☐

RF TEST ☐

TASK DESCRIPTION:

NEXT BATTERY SERVICING: ……/…… (MM/YYYY)

DATE: ……/……/…… (MM/DD/YYYY)

REPAIR STATION:

SIGNATURE AND STAMP:

NOTE : Attach the RF test sheet issued from the ELTA test tool.

LOG BOOK

MAINTENANCE TASKS

FINAL OPERATOR:

TYPE OF MAINTENANCE: BATTERY SERVICING ☐ INSPECTION ☐ REPAIR ☐

RF TEST ☐

TASK DESCRIPTION:

NEXT BATTERY SERVICING: ……/…… (MM/YYYY)

DATE: ……/……/…… (MM/DD/YYYY)

REPAIR STATION:

SIGNATURE AND STAMP:

NOTE : Attach the RF test sheet issued from the ELTA test tool.

FINAL OPERATOR:

TYPE OF MAINTENANCE: BATTERY SERVICING ☐ INSPECTION ☐ REPAIR ☐

RF TEST ☐

TASK DESCRIPTION:

NEXT BATTERY SERVICING: ……/…… (MM/YYYY)

DATE: ……/……/…… (MM/DD/YYYY)

REPAIR STATION:

SIGNATURE AND STAMP:

NOTE : Attach the RF test sheet issued from the ELTA test tool.

LOG BOOK

MAINTENANCE TASKS

FINAL OPERATOR:

TYPE OF MAINTENANCE: BATTERY SERVICING ☐ INSPECTION ☐ REPAIR ☐

RF TEST ☐

TASK DESCRIPTION:

NEXT BATTERY SERVICING: ……/…… (MM/YYYY)

DATE: ……/……/…… (MM/DD/YYYY)

REPAIR STATION:

SIGNATURE AND STAMP:

NOTE : Attach the RF test sheet issued from the ELTA test tool.

FINAL OPERATOR:

TYPE OF MAINTENANCE: BATTERY SERVICING ☐ INSPECTION ☐ REPAIR ☐

RF TEST ☐

TASK DESCRIPTION:

NEXT BATTERY SERVICING: ……/…… (MM/YYYY)

DATE: ……/……/…… (MM/DD/YYYY)

REPAIR STATION:

SIGNATURE AND STAMP:

NOTE : Attach the RF test sheet issued from the ELTA test tool.

LOG BOOK

MAINTENANCE TASKS

FINAL OPERATOR:

TYPE OF MAINTENANCE: BATTERY SERVICING ☐ INSPECTION ☐ REPAIR ☐

RF TEST ☐

TASK DESCRIPTION:

NEXT BATTERY SERVICING: ……/…… (MM/YYYY)

DATE: ……/……/…… (MM/DD/YYYY)

REPAIR STATION:

SIGNATURE AND STAMP:

NOTE : Attach the RF test sheet issued from the ELTA test tool.

FINAL OPERATOR:

TYPE OF MAINTENANCE: BATTERY SERVICING ☐ INSPECTION ☐ REPAIR ☐

RF TEST ☐

TASK DESCRIPTION:

NEXT BATTERY SERVICING: ……/…… (MM/YYYY)

DATE: ……/……/…… (MM/DD/YYYY)

REPAIR STATION:

SIGNATURE AND STAMP:

NOTE : Attach the RF test sheet issued from the ELTA test tool.