TagMaster

XT-1

Installation Manual

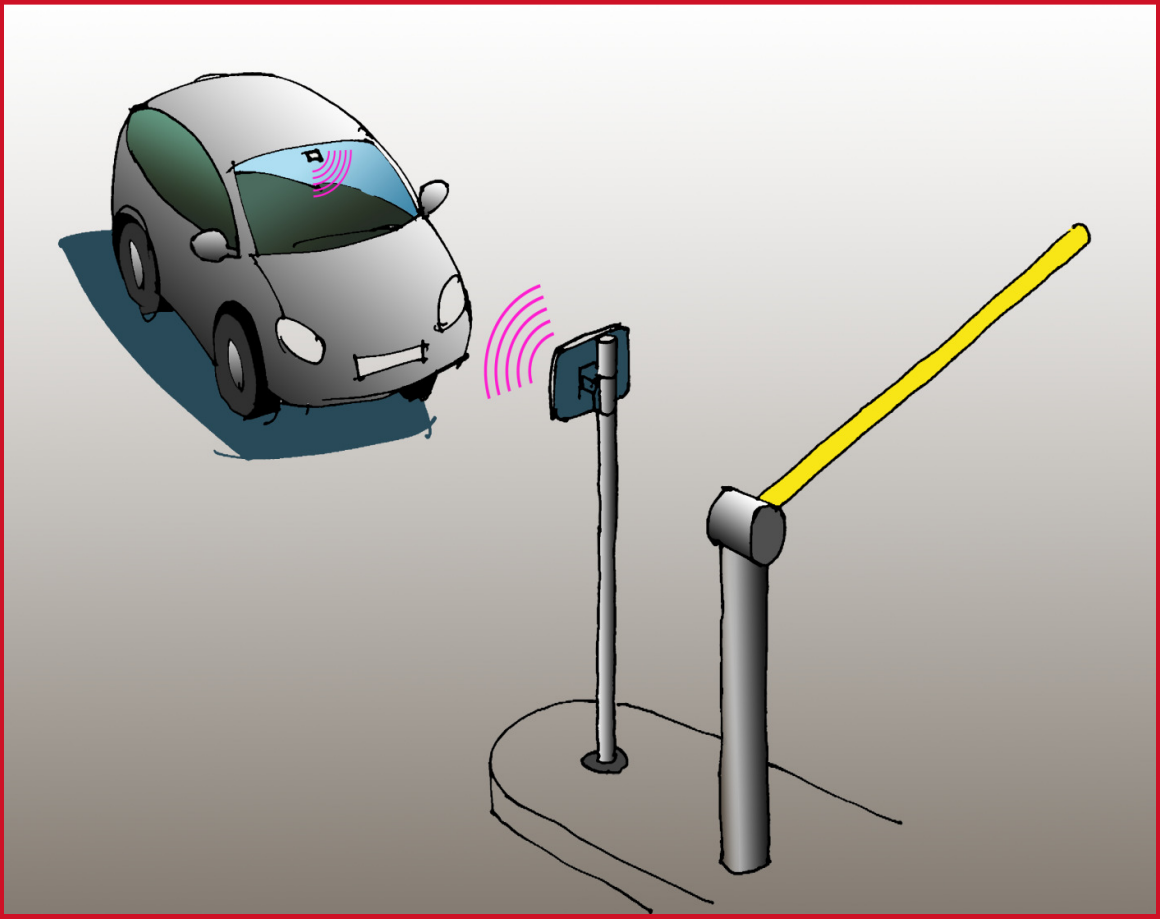

Note: This equipment has FCCID: M39XTXX. It complies with the limits for a Class A digital device, pursuant to part 15 of the FCC Rules. These limits are designed to provide reasonable protection against harmful interference when the equipment is operated in a commercial environment. This equipment generates, uses, and can radiate radio frequency energy and, if not installed and used in accordance with the instruction manual, may cause harmful interference to radio communications. Operation of this equipment in a residential area is likely to cause harmful interference in which case the user will be required to correct the interference at his own expense.

Caution: Changes or modifications not expressly approved by the party responsible for compliance could void the user's authority to operate the equipment.

Caution: To comply with Council Recommendation 1999/519/EC and FCC regulations, this reader must be installed to provide a separation distance of at least 25 cm from all persons and must not be co-located or operating in conjunction with any other antenna or transmitter.

Copyright

The copyright and ownership of this document belongs to TagMaster AB. The document may be downloaded or copied provided that all copies contain the full information from the complete document. All other copying requires a written approval from TagMaster AB.

Disclaimer

While effort has been taken to ensure the accuracy of the information in this document TagMaster AB assumes no responsibility for any errors or omissions, or for damages resulting from the use of the information contained herein. The information in this document is subject to change without notice.

Content

1 Introduction 4
1.1 Overview 4
1.2 Tags 4
1.3 Security 4

2 Installation 4
2.1 Safety Instructions 4
2.2 Mounting Instruction 4

3 Interfaces 6
3.1 Cables 6
3.2 Wires 8
3.2.1 Terminal Connections 8
3.2.2 Ethernet and USB 8
3.3 Power Supply 9
3.4 Wiegand/Magstripe 10
3.4.1 Wiegand Timing 11
3.4.2 Magstripe Timing 12
3.5 Ethernet 13
3.6 RS232 14
3.7 RS485 15
3.8 USB 17
3.9 Input 18
3.10 Output 19
3.11 Relay 20
3.12 DIP Switches 21
3.12.1 DIP SW S101 21
3.12.2 DIP SW S301 21
3.13 LED and Buzzer 22

4 Configuration 22
4.1 PC Tool 22
4.2 Settings 22
4.3 Reset to Factory Default 22

5 TAGP 22

6 Trouble Shooting 23

7 Technical Specification 31

1 Introduction

1.1 Overview

The XT-1 is an UHF RFID reader compliant with EPC Gen 2 (ISO 18000-6C). The reader is specifically tailored for Automated Vehicle Identification (AVI) applications such as Parking, Gated Communities and Condominiums. It has been designed for absolutely premium performance for read-range and environmental specification while also giving a large number of interface options and having an innovative implementation for TCP/IP connectivity and monitoring.

1.2 Tags

XT-1 supports any UHF tag compliant with the EPC Gen 2 standard. XT-1 also supports the SecureMarkID® format developed by TagMaster to ensure that each tag has a truly unique identity difficult to duplicate.

1.3 Security

The EPC Gen 2 standard was initially developed for low cost item management and has for that reason no built in support for encryption like DES or AES. This differentiates the system from for instance many proximity identification systems. To address this TagMaster has developed the SecureMarkID® format using a specific algorithm and non-writeable parts of the tag to create a truly unique identity difficult to duplicate. It is recommend to only use SecureMarkID® tags together with XT-1, but also to consider these limitations in any application requiring high security.

As the development of a cryptographic framework for EPC Gen2 proceeds, TagMaster will offer future new products to continue to make the most of available technology in an effort to offer the highest possible security.

2 Installation

2.1 Safety Instructions

The following safety instruction should be observed during installation, normal use and service.

- The installation and service should only be done by qualified personnel.
- Shields of cables should be connected to safety ground.
- The XT-1 must be disconnected from all voltage sources before any installation or service work. Capacitors inside the XT-1 can hold their charge even if the equipment has been disconnected from all voltage sources.
- Do not modify any part of the product. Repair is to be performed by TagMaster only.
- Where local regulations exist, these are to be followed. The safety information in this manual is a supplement to local regulations. It is the responsibility of the local project manager to make certain that local regulations are known and followed.

2.2 Mounting Instruction

The XT-1 can be mounted to a wall or a pole, see Figure 1. Mount the reader in a horizontal position with the cable glands on the bottom side. Direct the reader so that the reading lobe covers the positions of the tags. For optimal performance, tilt and rotate the reader into a position so that the front side of the reader is parallel with the front side of the tag to be read. Align the reader so that the actual reading range is 60–70% of the specified maximum.

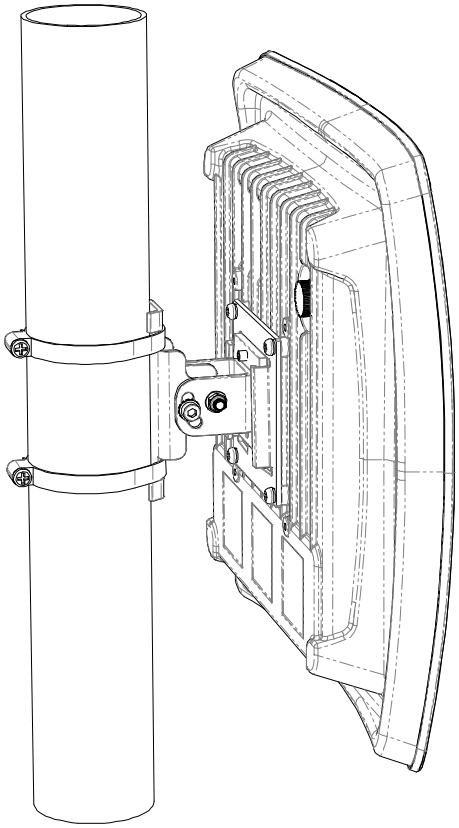

Figure 1 XT-1 mounted on a pole using UMK

The UMK (Universal Mounting Kit, Part No. 193600), see Figure 2, from TagMaster enables the reader to be mounted in a wide variety of positions and angles. The kit contains all parts needed for mounting the reader on a wall or on a pole. The UMK is suitable for outdoor use. See separate data sheet for more details on installation.

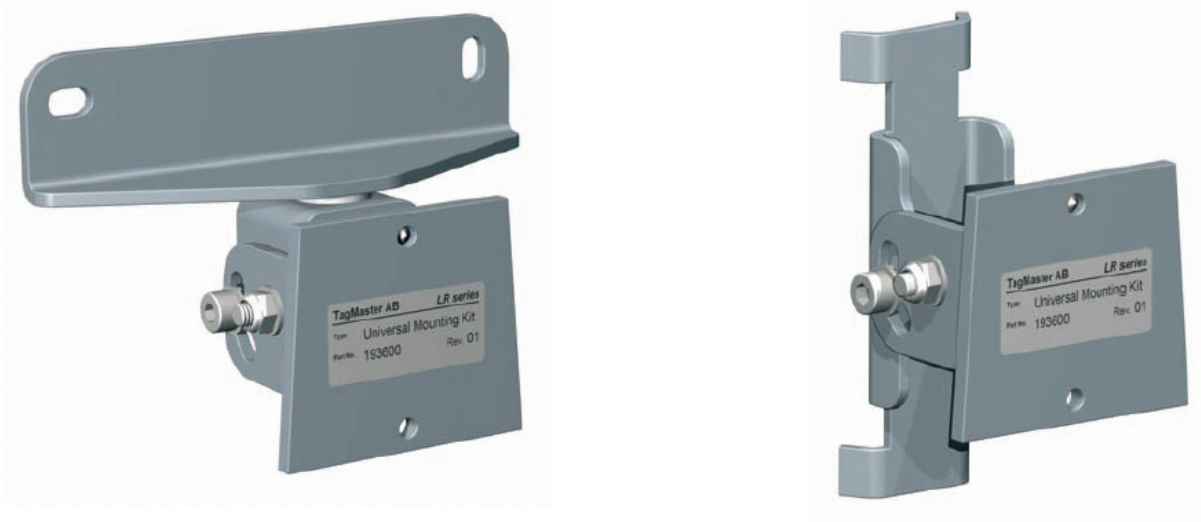

Figure 2 UMK for wall and pole mounting of XT-1

3 Interfaces

3.1 Cables

Connections to the XT-1 is primarily done using the central M20 cable gland, and secondarily by replacing any of the 4 pcs of M16 blind stops with cable glands, see Figure 3. Shielded cables should be used for all connections. Select cables suitable for the installation environment, considering indoor or outdoor environment and use flexible cables with stranded wire. The reader chassis should be grounded.

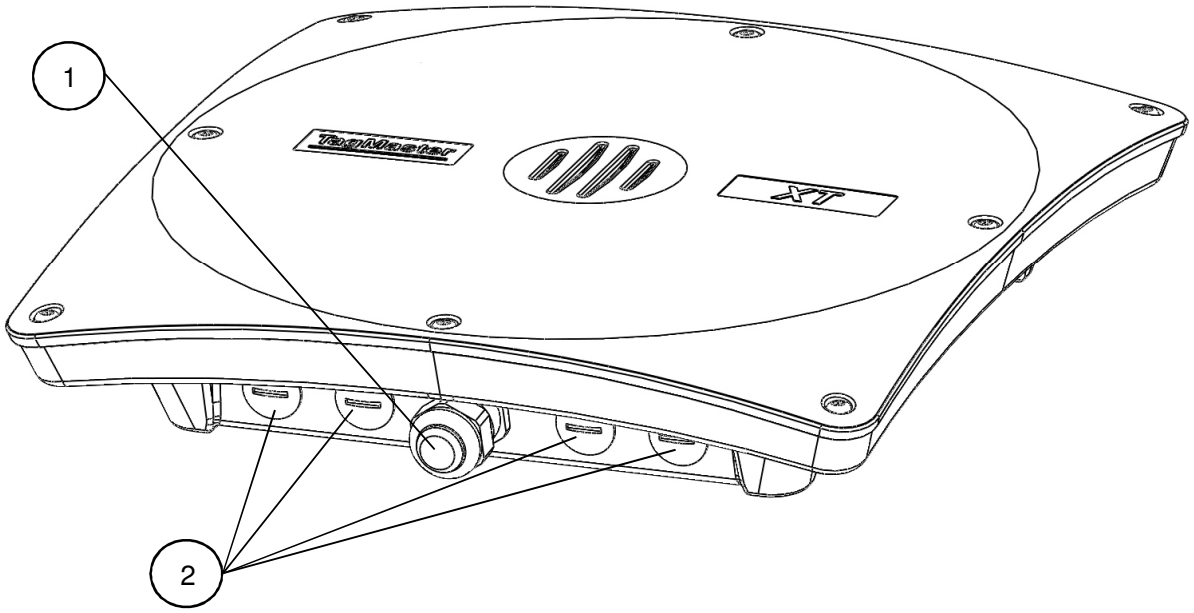

Figure 3 Cable connections for XT-1 (Pos. 1 is M20 cable gland, Pos. 2 is M16 blind stops)

Instructions:

1. Select and use the M20 cable gland insert corresponding to the number of cables required. The cable gland can be used with one cable (6-12 mm) or by using the supplied insert with two cables (2-6 mm), see Figure 4.
2. Open XT-1 lid by removing the 8 screws on the front, and slide the lid open.
3. Feed the cable (or two cables) through the cable gland and through the chassis. All parts of the cable gland except the nut shall be on the outside of the XT-1.
4. Connect the wires to relevant terminals and connections depending on interfaces being used. If using RJ45 connectors for Ethernet these must be crimped inside the reader.
5. Connect the shielding of the power cable to the chassis grounding point using the grounding screw (Figure 5, Pos. 1).
6. Screw the cable gland to tighten and ensure proper water and dust sealing.

As an alternative for grounding, a metallic cable gland (not included) can be used to connect to the reader chassis to ground using the power cable shielding.

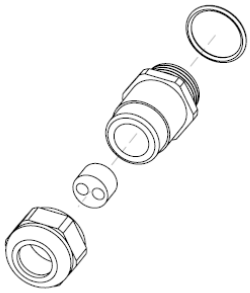

Figure 4 The XT-1 M20 cable gland with insert for 2 cables

Never use the ventilating membrane (Figure 5, Pos. 2) on the back of the XT-1 for cable connections.

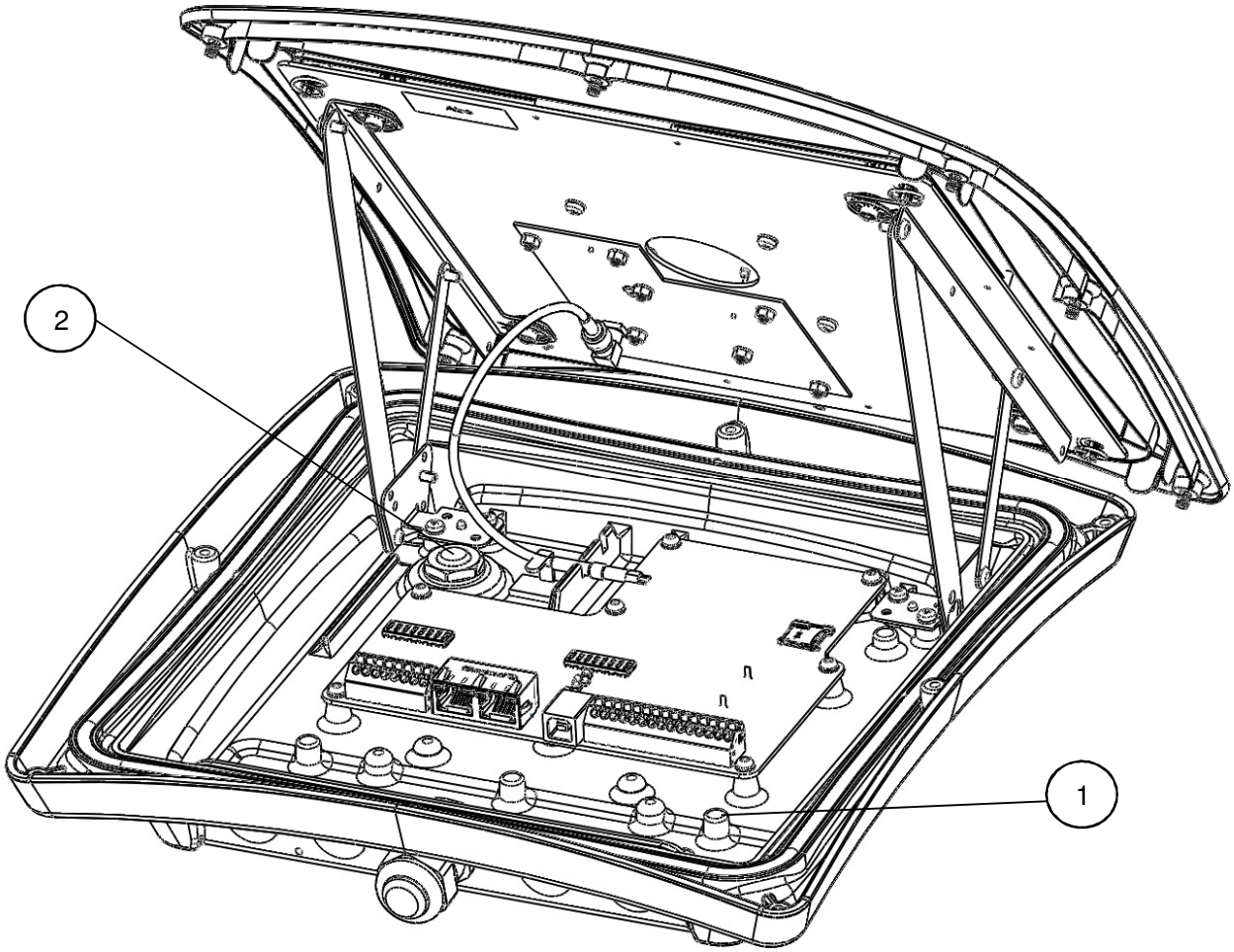

Figure 5 XT-1 overview (Pos. 1 is ground screw connection, Pos.2 is ventilating membrane)

3.2 Wires

3.2.1 Terminal Connections

Wire connections (with the exception of Ethernet and USB, see §3.2.2) are added as singles wires to spring cage terminal connectors, see Figure 6. These are easy-to-use terminals for single stranded wires.

Instructions:

1. Strip wire lead approximately 9 mm.
2. Push screwdriver down to release spring cage.
3. Insert wire into terminal.
4. Remove screwdriver which will clamp wire.
5. Gently pull installed wire to make sure connection is reliable.

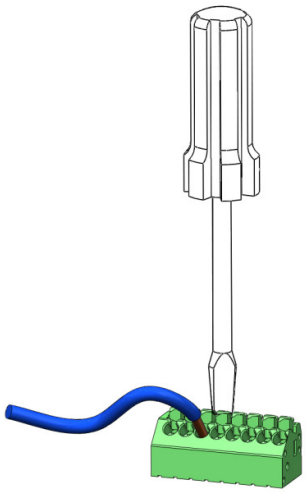

Figure 6 Connection with easy-to-use spring cage terminal

Wire size	0.5mm^2 - 1.5mm^2 / AWG20 - AWG 16

Table 1 Wire connection overview

3.2.2 Ethernet and USB

Ethernet is connected using RJ45 connectors. To be able to fit this connector given the limited diameter of M20 cable gland and the hole in the chassis, such RJ45 must be crimped to the wires inside the reader. This is done with corresponding standard tool and RJ45. Pass the Ethernet cable through the cable gland before crimping the connector on the cable.

USB is intended for service interface and therefore connected only when lid is open. Connection is done using a standard USB type B cable.

3.3 Power Supply

The XT-1 shall be powered by an isolated power supply suitable for outdoor use. The required voltage is 12 VDC to 24VDC. It is recommended to use a power supply of 24 VDC, 1 A minimum.

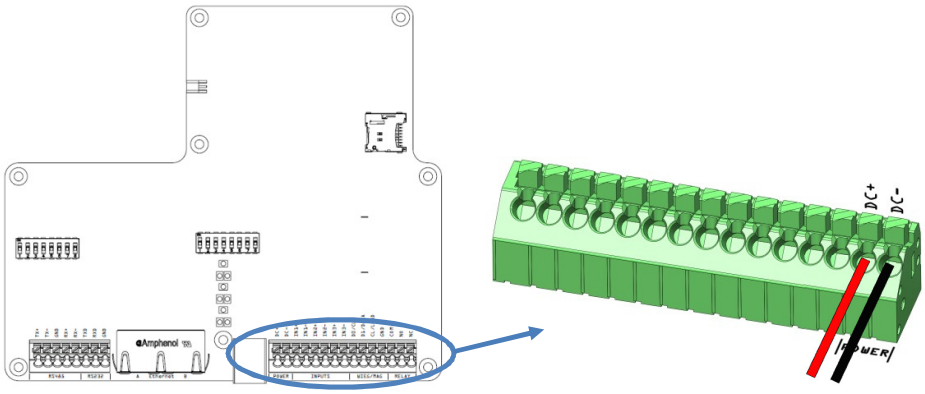

Figure 7 Power supply connection, overview and detail

The power input has built-in protection for an accidental connection of reversed polarity.

Connections	DC+ High supply potential (See Figure 7 for details) DC- Low supply potential
Supply voltage	12 VDC to 24 VDC (Absolute minimum rating 10 VDC, absolute maximum rating 30 VDC)
Recommended / Max length	10m / 100m
Wire size	Recommended length 0.5mm^2 / AWG 20 Max length 1.5mm^2 / AWG 16

Table 2 Power connection overview

3.4 Wiegand/Magstripe

The Wiegand interface is shared with Magstripe and outputs. This selection of interface is done via SW configuration see §4. Furthermore is the details of the Wiegand output format configured using SW. The interface has a separate isolation of 1500 VDC and varistor protection for over voltage.

The XT-1 has a built-in option (3xDIP) of 1kΩ pull-ups on the transmit side for D0/CLK, D1/DATA and CL/LOAD. The DIP switches are also described in §3.12.

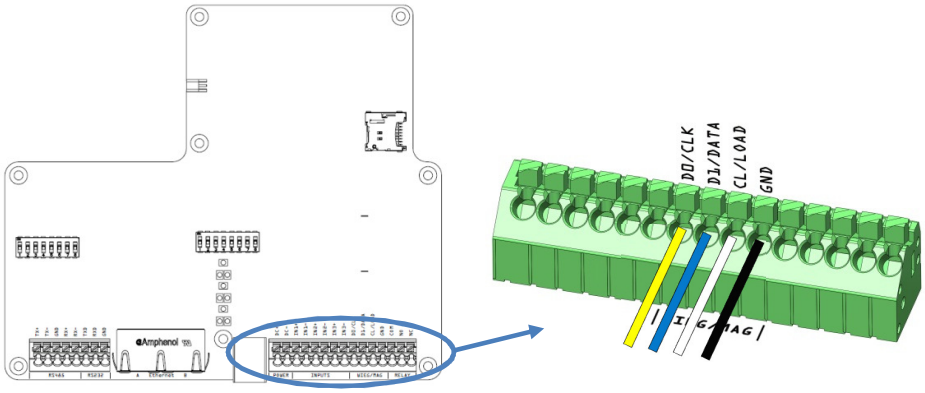

Figure 8 Wiegand connection, overview and detail

Connections (Wiegand)	D0 Wiegand 0 (See Figure 8 for details) D1 Wiegand 1 CL Card Load GND Ground
Connections (Magstripe)	CLK Magstripe clock (See Figure 8 for details) DATA Magstripe data LOAD Card load GND Ground
Recommended / Max length	10m / 100m (depending on properties of receiving system)
Wire size	0.5mm^2 / AWG 20
Voltage	30 V (Max)
Sink current	50 mA (Max)
Isolation	1500 VDC (Min)

Table 3 Wiegand connection overview

3.4.1 Wiegand Timing

The following values apply when all outputs are pulled up to 5V with 1kΩ resistors.

Symbol	Parameter	Min	Typ	Max	Unit
t_{SU}	CL to D# setup time	0			µs
t_F	Fall time (all signals)		125		ns
t_R	Rise time (all signals)		5		µs
t_{PI}	Pulse interval		2		ms
t_{PW}	Pulse width		80		µs
t_H	CL hold time after last D# change	0			µs

Table 4 Wiegand interface timing

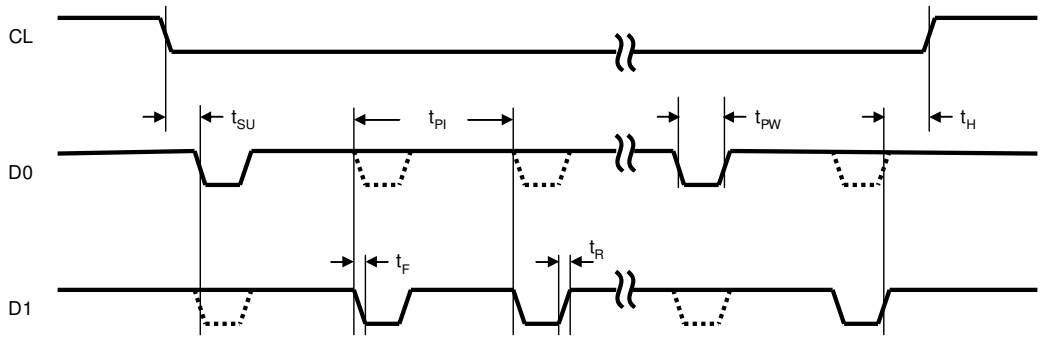

Figure 9 Wiegand timing diagram

Description on default output format to be added in later revision.

3.4.2 Magstripe Timing

The following values apply when all outputs are pulled up to 5V with 1kΩ resistors.

Symbol	Parameter	Min	Typ	Max	Unit
t_{SU}	LOAD to CLK setup time	0			µs
t_F	Fall time (all signals)		125		ns
t_R	Rise time (all signals)		5		µs
t_{CL}	Clock low		160		µs
t_{CH}	Clock high		160		µs
t_H	LOAD hold time after last CLK change	0			µs

Table 5 Magstripe interface timing

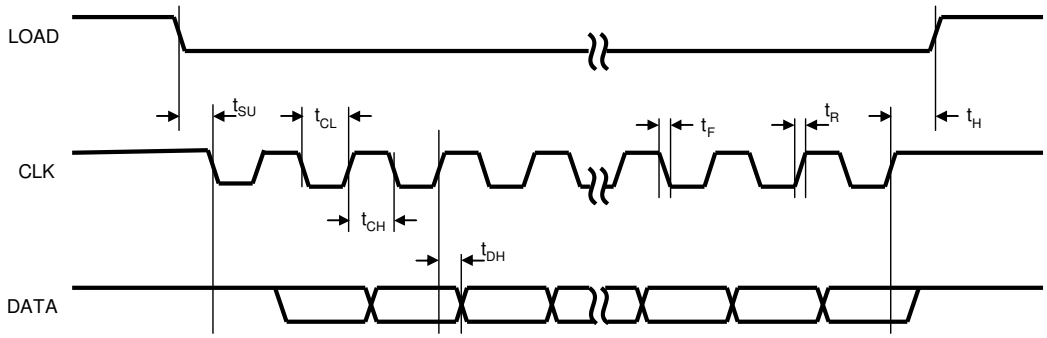

Figure 10 Magstripe timing diagram

Description on default output format to be added in later revision.

3.5 Ethernet

The XT-1 has a built in 10Mbps/100Mbps Ethernet switch and dual ports. This makes it possible to connect a number of readers in a system without the need for additional network equipment. The two ports A and B are using RJ45 connectors and are fully equivalent.

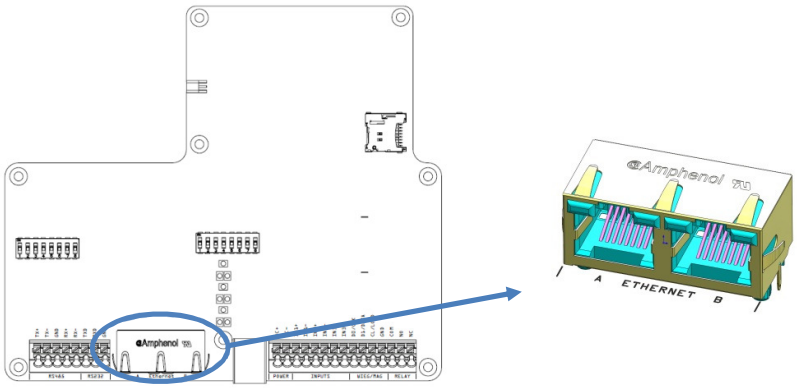

Figure 11 Ethernet connection, overview and detail

The XT-1 supports auto crossover (Auto-MDIX) so that installation can be done using both patch and crossover cables. The connectors have eight pins and the wire scheme is based on the T568A standard. The interfaces have separate isolation of 1500 VDC.

The default IP address of the device is unique among XT-1 readers and can be found on the label on the back of the XT-1. This makes it possible to create a stand-alone network without changing any reader network settings. Detailed network settings are configured using SW, see §4. Each port has two LED indicators for Link/Activity (Yellow/Flashing Yellow) and 10Mbps/100Mbps speed (Off/Green).

Connections	A B	Port A (See Figure 11 for details) Port B
Recommended / Max length	- / 100m	
Wire size	CAT5e cable is required for the Ethernet connection	

Table 6 Ethernet connection overview

Ethernet communication is normally done using TagMaster protocol TAGP available at port 9999. See Manual 05-172 TAGP Protocol Specification for details.

Example:

The following is an example on how a connection using Ethernet, TCP/IP and TAGP can be tested

1. *Download PUTTY-TE from TagMaster ftp-server ftp://partner:245ghz@ftp.tagmaster.com*
2. *Open a connection with PUTTY-TE using the IP address of the XT-1 and selecting TAGP*
3. *Write the following sequence to get a 2.5s beep from the reader:*

User input	***XT-1 response***
HELOTAGP/2.0	*RPLYHELO00*
PUSHBEEP9C9	*RPLYPUSH00*

Table 7 Ethernet connection example

3.6 RS232

The RS232 interface is used for host communication and supports ASCII output and TAGP. Detailed settings are configured using SW, see §4. The interface has a separate isolation of 1500 VDC and varistor protection for over voltage.

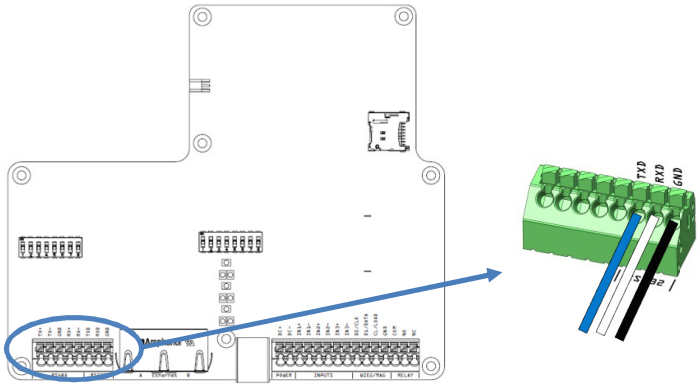

Figure 12 RS232 connection, overview and detail

Connections	TXD RXD GND	Transmitted data to host (See Figure 12 for details) Received data from host Ground
Recommended / Max length	- / 10m	
Wire size	Specification according to EIA RS232C. Belden 9184 or Belden 9502 are recommended.	
Max Baud Rate	115.2 kb/s (default)	

Table 8 RS232 connection overview

The default output of the RS232 interface is a one directional ASCII output of tag data. If SecureMarkID® tags from TagMaster are being used (recommended) this identity is sent followed by CR+LF ('\r''\n'). If other EPC tags are being used the default output is the EPC data followed by CR+LF ('\r''\n').

As an alternative can TAGP be selected as format if configured using SW.

3.7 RS485

The RS485 interface is used for host communication and supports ASCII output and TAGP. It generally supports longer transmission distances than RS232. Detailed settings are configured using SW, see §4. The interface has a separate isolation of 1500 VDC and varistor protection for over voltage.

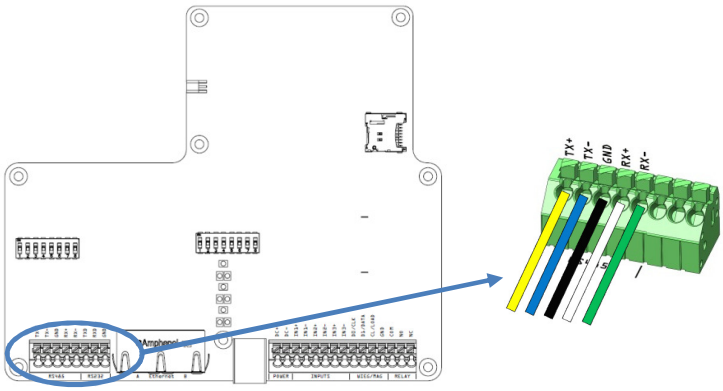

Figure 13 RS485 connection, overview and detail

The hardware supports 2- wire (2xDIP) and 4-wire communication, half duplex and full duplex as well as multi-drop. When using RS485 communication, correct termination of the interface must always be considered in order to handle transmission-line effects. The XT-1 has a built-in option (DIP) of 120Ω termination on the receive side, and an option (2xDIP) of 600Ω bias on receive side. The options using DIP switches are detailed in Figure 14 and also described in §3.12.

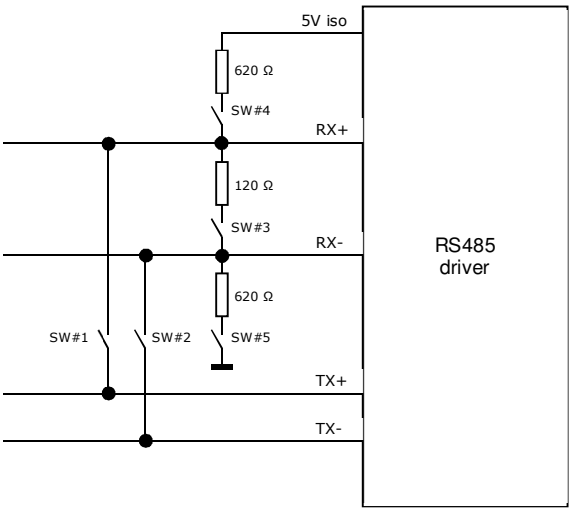

Figure 14 RS485 DIP switch configuration options

Connections	TX+ TX- GND RX+ RX -	Transmitted data to host (See Figure 13 for details) Transmitted data to host Ground Received data from host Received data from host
Recommended / Max length	- / 1000m	
Wire size	The cable for the RS485 interface must be a twisted pair cable and conform to the EIA RS485 standard.	
Max Baud Rate	115.2 kb/s (default)	

Table 9 RS485 connection overview

The default output of the RS485 interface is a one directional ASCII output of tag data. If SecureMarkID® tags from TagMaster are being used (recommended) this identity is sent followed by CR+LF ('\r''\n'). If other EPC tags are being used the default output is the EPC data followed by CR+LF ('\r''\n').

As an alternative can TAGP be selected as format if configured using SW.

3.8 USB

The XT-1 has one USB type B connector, and acts like a USB 2.0 Full-Speed (12 Mbps) device. This interface is only intended for configuration and software download (service and maintenance). The interface is connected using a standard cable to a USB port of a PC, and after installing specific TagMaster software can maintenance be done, see §4.

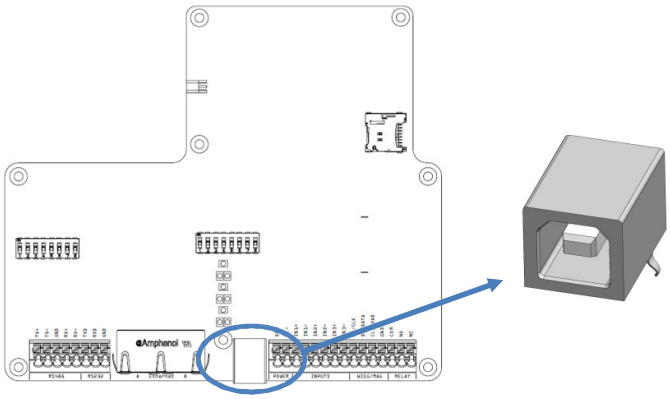

Figure 15 USB connection, overview and detail

Connections	VBUS +5VDC (See Figure 15 for details) DM Data– DP Data+ GND Ground
Recommended / Max length	1m / TBD
Wire size	TBD

Table 10 USB connection overview

3.9 Input

The XT-1 has 3 inputs available. The inputs are opto-coupled, have 1500VDC isolation and protection for reversed polarity. They have an input impedance of 1kΩ and are activated by a current flow. The inputs are intended for optional connection to detectors (inductive loop, IR or other type). The types are ‘Presence detector input’, ‘Safety detector input’ and ‘Opening detector input’.

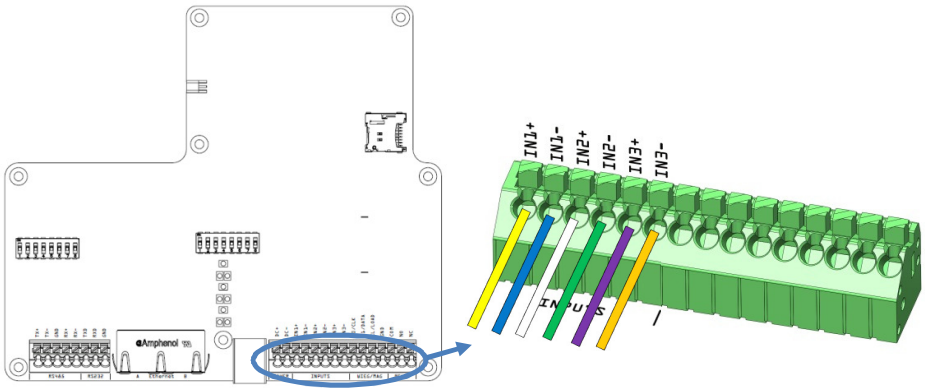

Figure 16 Input connections, overview and detail

Connections	IN1+ IN1- IN2+ IN2- IN3+ IN3-	Presence detector input+ (See Figure 16 for details) Presence detector input- Safety detector input+ Safety detector input- Opening detector input+ Opening detector input-
High Voltage (active)	Min 3.0 V / Max 30 V	
Low Voltage (inactive)	Min 0.0 V / Max 0.2 V	
Input impedance	1 kΩ	
Recommended / Max length	10m / 100m	
Wire size	0.5mm^2 / AWG 20	

Table 11 Input connection overview

3.10 Output

The XT-1 has 3 open-collector outputs shared with Wiegand/Magstripe available. These are currently intended for future use and have no specific functionality assigned (other than Wiegand/Magstripe). The interface has an isolation of 1500VDC.

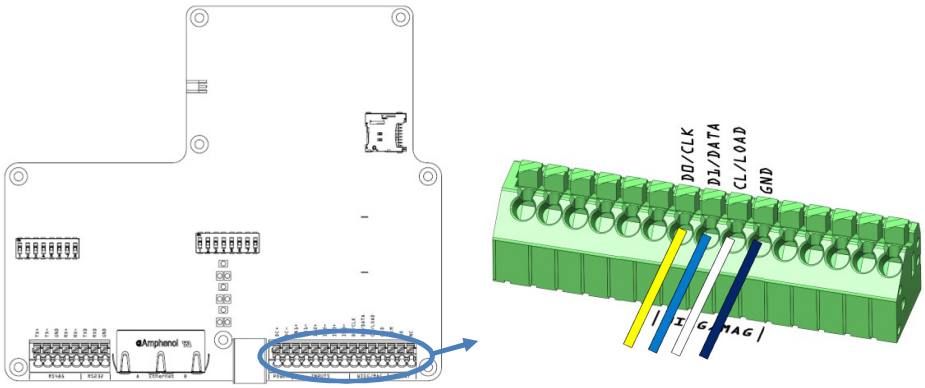

Figure 17 Output connections, overview and detail

Connections	D0 Output 0 (See Figure 17 for details) D1 Output 1 CL Output 2 GND Ground
Applied Voltage	Min 1.0 V / Max 30 V
Sink Current	Min 0.0 mA / Max 500 mA
Supply	Min 10 V / Max 30 V Min 3 mA / Max 9 mA
Recommended / Max length	10m / 100m
Wire size	0.5mm^2 / AWG 20

Table 12 Output connection overview

3.11 Relay

The XT-1 has a non-latching relay available. It is typically connected to the logic controlling a barrier, gate or other object when the reader is in stand-alone operation.

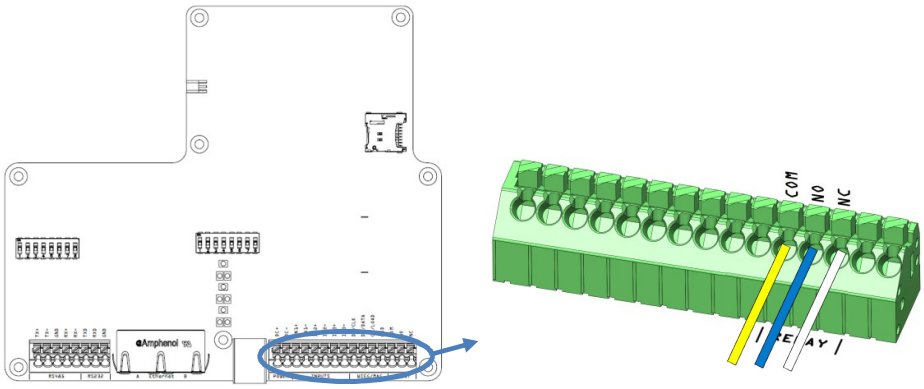

Figure 18 Relay connections, overview and detail

Connections	COM Common (See Figure 18 Figure 18 Relay connections, overview and detailfor details) NO Normally Open NC Normally Closed
Switching current	Max 2A
Switch voltage	Max. 60VDC / 30VAC
Switching capacity:	Max. 60W / 62,5VA
Recommended / Max length	10m / 100m
Wire size	0.5mm^2 / AWG 20

Table 13 Output connection overview

3.12 DIP Switches

Two DIP switches (8 positions) are available for physical configuration of a few major parameters. All other configurations are done using software. Default state for all switches is ‘Off’.

3.12.1 DIP SW S101

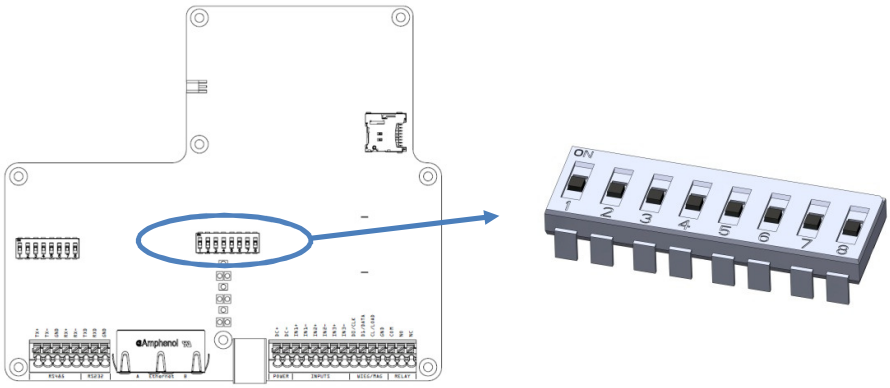

Figure 19 DIP SW S101, overview and detail

Position 1	Firmware upgrade mode. Toggle to ‘On’ and cycle power before firmware upgrade using USB. Return to ‘Off’ after upgrade complete.
Position 2	Restore factory default settings. Toggle to ‘On’ and cycle power for complete reader reset. Return to ‘Off’ after restore complete.

3.12.2 DIP SW S301

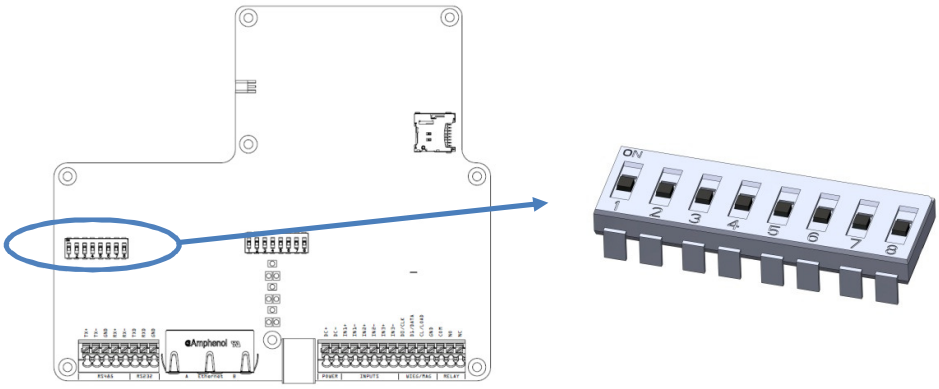

Figure 20 DIP SW S301, overview and detail

Position 1	Enable RS485 2-wire mode, TX+ <-> RX+ (always together with Position 2)
Position 2	Enable RS485 2- wire mode, TX- <-> RX- (always together with Position 2)
Position 3	Enable RS485 120Ω termination between RX+ and RX-
Position 4	Enable bias RS485 620 Ω RX+, up
Position 5	Enable bias RS485 620 Ω RX-, down
Position 6	Enable 1 kΩ pull-up D0/CLK
Position 7	Enable 1 kΩ pull-up D1/DATA
Position 8	Enable 1 kΩ pull-up CL/LOAD

3.13 LED and Buzzer

The XT-1 is equipped with bright LEDs for external signalling. These can indicate red/green/yellow based on software settings. Default signalling is green for ‘tag read’/’ tag accepted’ and red for ’tag not accepted’

The buzzer is default off, but can be enabled for indicating ‘tag read’/’tag accepted’.

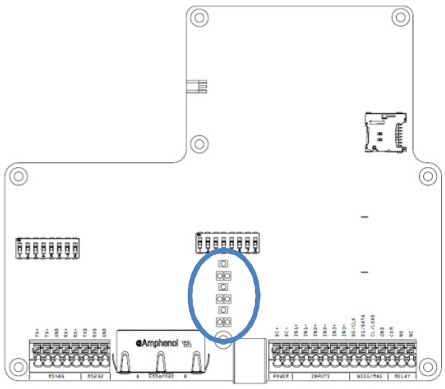

Figure 21 LED, overview

4 Configuration

4.1 PC Tool

A PC tool is available for reader communication and firmware download.

4.2 Settings

The available settings can be found in the PC Tool. Generally these settings includes necessary configuration for networking, interface output and reader behaviour.

4.3 Reset to Factory Default

To restore the reader back to the factory defaults state toggle the corresponding DIP switch (see §3.12) to ‘On’ and cycle the power. Wait for a few seconds, return the DIP switch to ‘Off’ and then cycle power again.

After a reset to factory defaults all software settings are reverted back to the original state. The IP-address of the device is again the one printed on the label on the back of the reader.

5 TAGP

The protocol TAGP is available on Ethernet, RS232 and RS485 interfaces.

6 Trouble Shooting

To facilitate trouble shooting, consider the following:

- Make sure the XT-1 has correct supply voltage with sufficient current. There is a small green LED on the electronic board, only visible when the lid of the reader is in open position. A flashing green light of this LED indicates that power is connected and that the microcontroller is alive.
- If using Ethernet communication, make sure that the network connection is ok. There are small LEDs of the RJ45 socket, only visible when the lid of the reader is in open position. A yellow light indicates ‘Link’ and flashing yellow light indicates ‘Activity’.
- If the software settings might have been set to unclear state or the IP-address mixed up, a reset to factory default operation is recommended, see §4.3.
- Make sure that working and correctly formatted EPC Gen 2 tags are being used.

.

7 Technical Specification

Operating frequencies	Area 1: 865.6-867.6 MHz Europe, Area 2: 902-928 MHz US, Americas
Read range	Up to 8 meters (20ft) with TagMaster UHF tags with SecureMarkID®; Windshield ID-tag and Credit Card ID-tag
Dimensions	300x300x60 mm (11.8x11.8x2.4 in)
Weight	2.3 kg (5.1 lbs)
Protection	IP 66
Operating temperature	-40℃ to +60℃ (-40℉ to +140° F) EN 60068-2-1 Ad, En 60068-2-2 Bd, EN 60068-2-14 Nb
Storage temperature	-40℃ to +85C℃ (-40℉ to +185℉)
Relative humidity	93%RH @ 65C EN 60068-2-30
Housing	Aluminium housing UL94 certified XENOY™ cover
Power supply	12-24 VDC supply
Power consumption	10W (max 12W)
Output power	Area 1 2W (e.r.p.), Area 2 4W (e.i.r.p.)
Input	3 isolated inputs
Output	3 isolated outputs shared with Wiegand/Magstripe
Relay	1 relay output 60VDC, 2A
Interfaces	RS232, RS485, Wiegand/Magstripe, 2 pcs Ethernet and USB service Interface
Certificates	CE Certificate according to R&TTE-directive 1999/5/EC and FCC RoHS Directive 2002/95/EC and 2011/65/EU WEEE 2002/96/EC
Standards	EPC Gen 2 (ISO 18000-6C)
LED indicator	Res/Green/Yellow
Communications protocols	TAGP and various OEM protocols
Encrypted air interface	According to EPC Gen 2 (ISO 18000-6C)
EMC	EN 301489-1, EN 301489-3
Radio	EN 302 208-1, EN 302 208-2 FCC: CFR 47, Part 15 subpart C, FCC ID: M39XTXX
Safety & health	EN 60950-1, EN 60950-22 & 1999/519/EC
Mechanical	EN 60068-2-27 Ea, EN 60068-2-64 Fh
Manuals and documentation	XT-1 Installation Manual, 13-111 TAGP Manual, 05-172
Part No.	Area 1: 152500 Area 2: 152600

Technical Support

Phone: + 46 8 632 19 50
Fax: +46 8 750 53 62
E-mail: support@tagmaster.com

Office Address

TagMaster AB
SE-164 46 KISTA
SWEDEN

Phone: +46 8 632 19 50
Fax: +46 8 750 53 62
E-mail: sales@tagmaster.com
Web: www.tagmaster.com