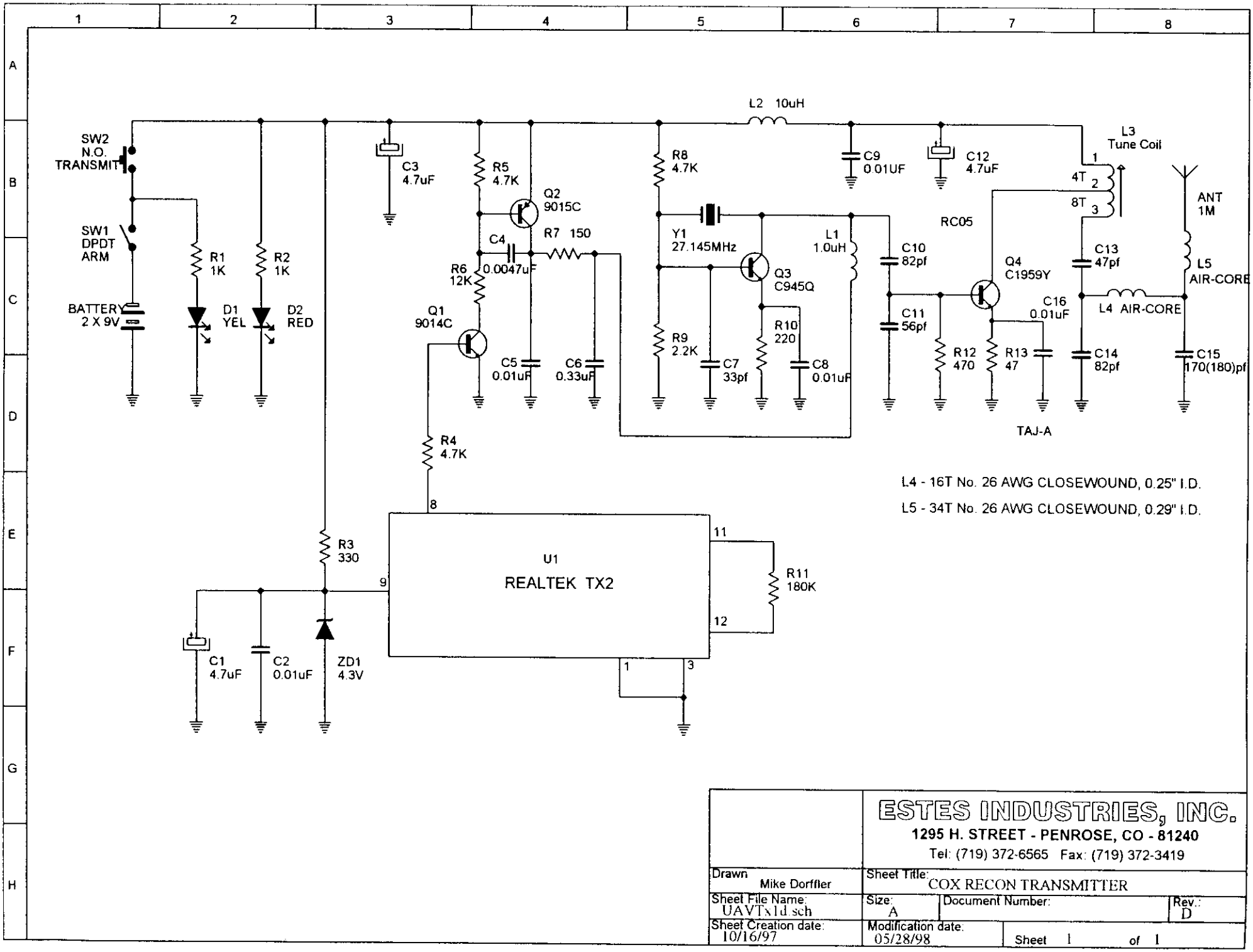
SW2
N.O.
TRANSMIT
SW1
DPDT
ARM
BATTERY
2 X 9V
R1
1K
R2
1K
D1
YEL
D2
RED
C3
4.7uF
R5
4.7K
Q2
9015C
C4
0.0047uF
R7 150
R6
12K
Q1
9014C
C5
0.01uF
C6
0.33uF
R4
4.7K
R3
330
C1
4.7uF
C2
0.01uF
ZD1
4.3V
U1
REALTEK TX2
R11
180K
L2 10uH
R8
4.7K
Y1
27.145MHz
Q3
C945Q
R9
2.2K
C7
33pf
R10
220
C8
0.01uF
L1
1.0uH
C9
0.01UF
C10
82pf
C11
56pf
C12
4.7uF
RC05
Q4
C1959Y
R12
470
R13
47
C16
0.01uF
TAJ-A
L3
Tune Coil
4T
8T
C13
47pf
C14
82pf
L4 AIR-CORE
ANT
1M
L5
AIR-CORE
C15
170(180)pf
L4 - 16T No. 26 AWG CLOSEWOUND, 0.25" I.D.
L5 - 34T No. 26 AWG CLOSEWOUND, 0.29" I.D.
ESTES INDUSTRIES, INC.
1295 H. STREET - PENROSE, CO - 81240
Tel: (719) 372-6565 Fax: (719) 372-3419
Drawn Mike Dorffler
Sheet Title: COX RECON TRANSMITTER
Sheet File Name: UAVTx1d.sch
Size: A
Document Number:
Rev.: D
Sheet Creation date: 10/16/97
Modification date: 05/28/98
Sheet 1 of 1