# Sample Data

Product Name : ANTB24-043A0
Frequency : 2.4～2.5GHz
Cable : L=83 (U-FL, φ0.8)

【NOTE】

| Frequency | VSWR | Average Gain[dBi] | | | | | | Total Avg. Gain [d.] |
|---|---|---|---|---|---|---|---|---|
| | | Z-X Plane | | Z-Y Plane | | X-Y Plane | | |
| | | V | H | V | H | V | H | |
| 2.4GHz | 1.08 | -1.9 | -11.1 | -12.2 | -3.7 | -7.7 | -6.1 | -5.7 |
| 2.45GHz | 1.14 | -1.1 | -10.6 | -12.9 | -2.5 | -6.9 | -5.5 | -4.9 |
| 2.5GHz | 1.30 | -0.7 | -11.2 | -13.3 | -2.3 | -6.5 | -5.9 | -4.7 |

【DATA】


| PAGE | |
|---|---|
| 2 | VSWR |
| 3 | Measurement Condition |
| 4 | Directivity／Gain(2.4GHz) |
| 5 | Directivity／Gain(2.45GHz) |
| 6 | Directivity／Gain(2.5GHz) |



SANSEI ELECTRIC CO.,LTD.
11-13, 5-CHOME, EBARA, SHINAGAWA-KU, TOKYO, JAPAN
TEL 03-3784-5103
FAX 03-5749-7270


12-Sep-05

| APVD. | CHKD. | DSND. |
|---|---|---|
| 技術部 '05.9.22 渡辺 | 技術 05.9.22 清藤 | 技術 05.9.22 櫻井 |

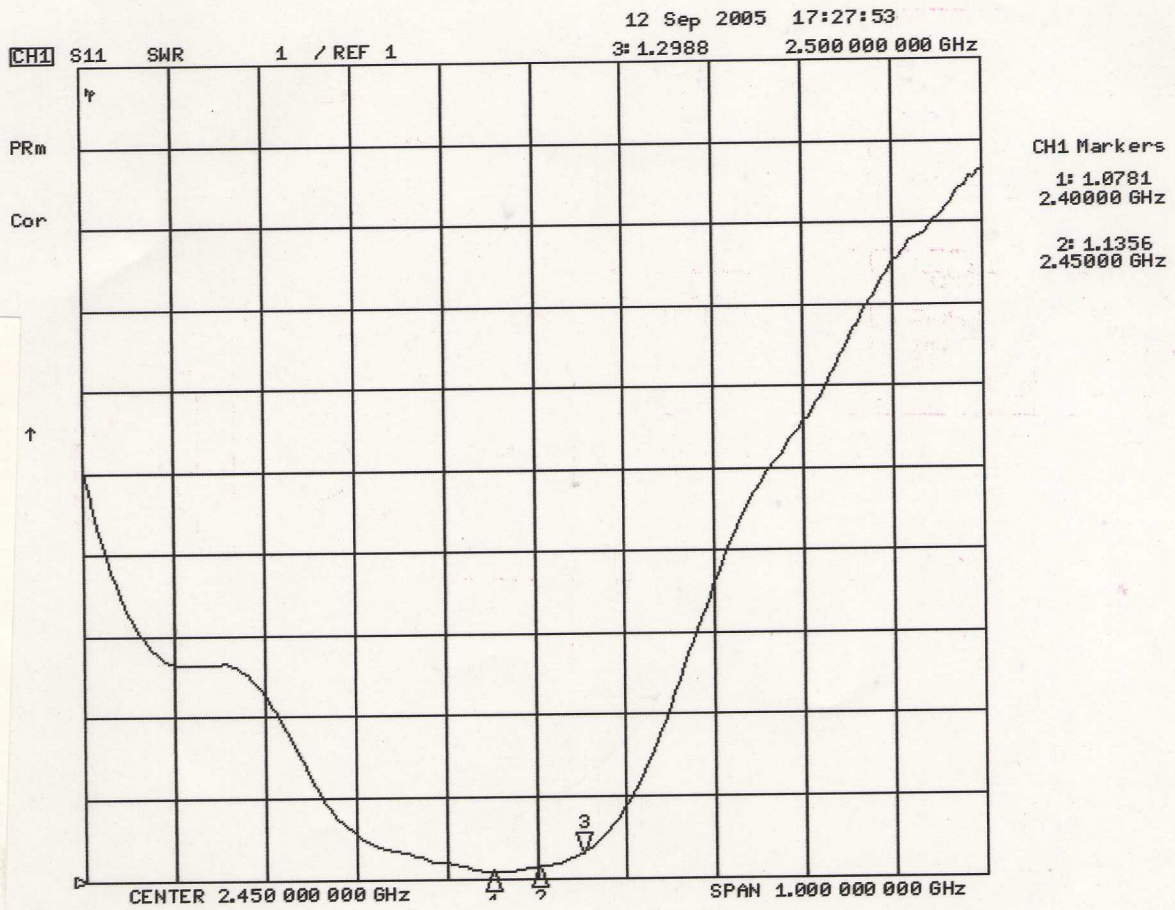
12 Sep 2005 17:27:53
CH1 S11 SWR 1 / REF 1
3: 1.2988
2.500 000 000 GHz
PRm
Cor
CH1 Markers
1: 1.0781
2.40000 GHz
2: 1.1356
2.45000 GHz
3
CENTER 2.450 000 000 GHz
SPAN 1.000 000 000 GHz

# Mesurement Environment Condition

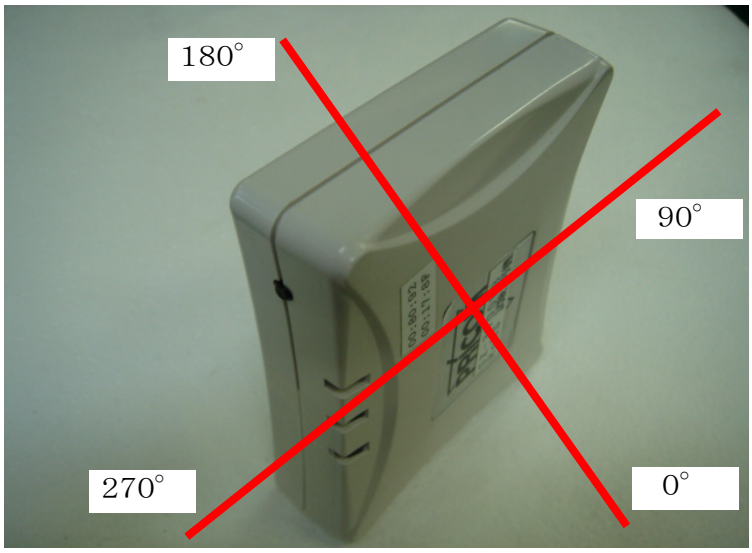


fig.1 Vertical Plane F／B Patte

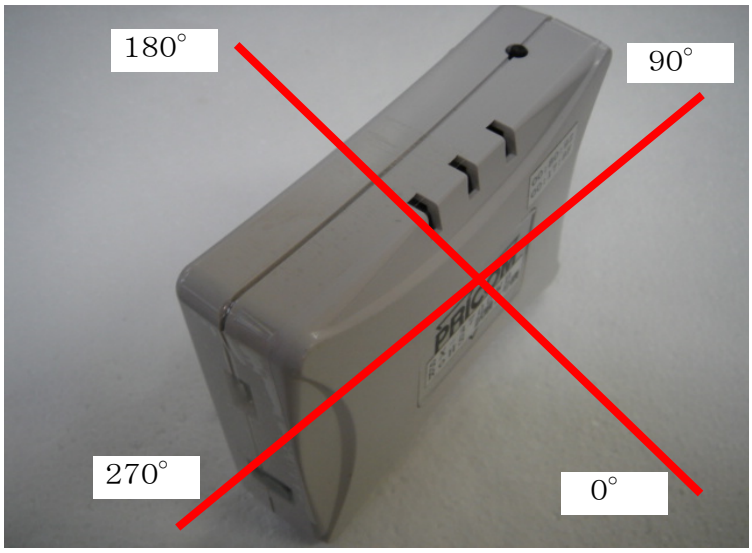


fig.2 Vertical Plane L/R Patter

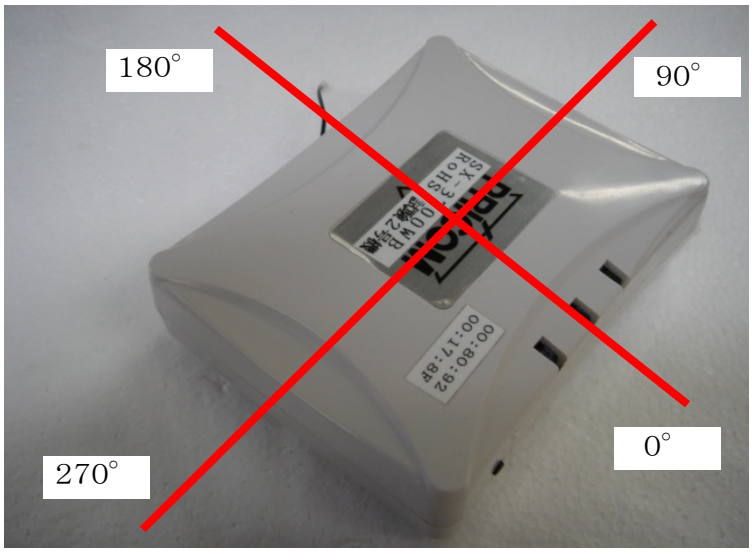


fig.3 Horizontal Plane Pattern

# Directivity／Gain

Polarization : V
Frequency : 2400 MHz
Standard Antenna Level : −51.4 dBm
Antenna Gain : 3.7 dBd ( 5.8 dBi )
Average Gain : −4.0 dBd ( −1.9 dBi )

Vertical Plane F／B Pattern
(Z-X PLANE)

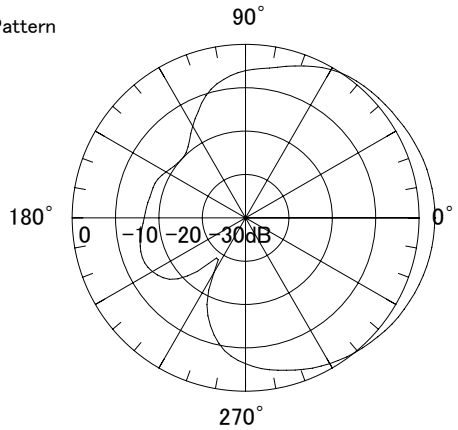


Polarization : H
Frequency : 2400 MHz
Standard Antenna Level : −51.4 dBm
Antenna Gain : −8.8 dBd ( −6.6 dBi )
Average Gain : −13.2 dBd ( −11.1 dBi )

Vertical Plane F／B Pattern
(Z-X PLANE)

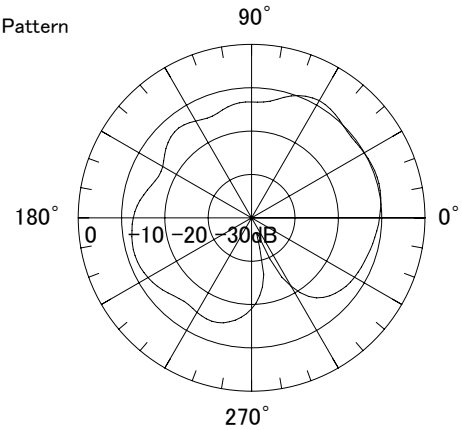


Polarization : V
Frequency : 2400 MHz
Standard Antenna Level: −51.4 dBm
Antenna Gain : −7.0 dBd ( −4.9 dBi )
Average Gain : −14.4 dBd ( −12.2 dBi )

Vertical Plane L/R Pattern
(Z-Y PLANE)

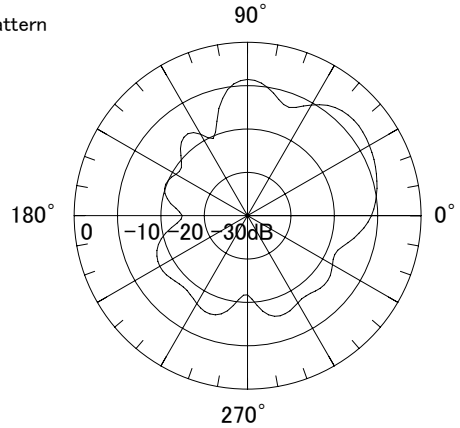


Polarization : H
Frequency : 2400 MHz
Standard Antenna Level: −51.4 dBm
Antenna Gain : 2.2 dBd ( 4.4 dBi )
Average Gain : −5.9 dBd ( −3.7 dBi )

Vertical Plane L/R Pattern
(Z-Y PLANE)

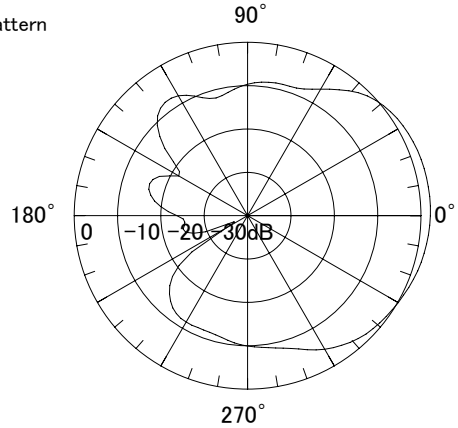


Polarization : V
Frequency : 2400 MHz
Standard Antenna Level: −51.4 dBm
Antenna Gain : −4.2 dBd ( −2.1 dBi )
Average Gain : −9.9 dBd ( −7.7 dBi )

Horizontal Plane Pattern
(X-Y PLANE)

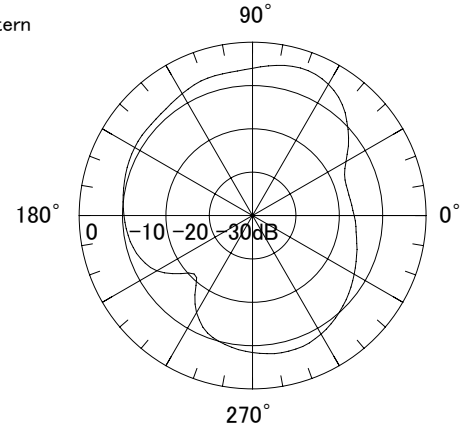


Polarization : H
Frequency : 2400 MHz
Standard Antenna Level: −51.4 dBm
Antenna Gain : −3.0 dBd ( −0.8 dBi )
Average Gain : −8.2 dBd ( −6.1 dBi )

Horizontal Plane Pattern
(X-Y PLANE)

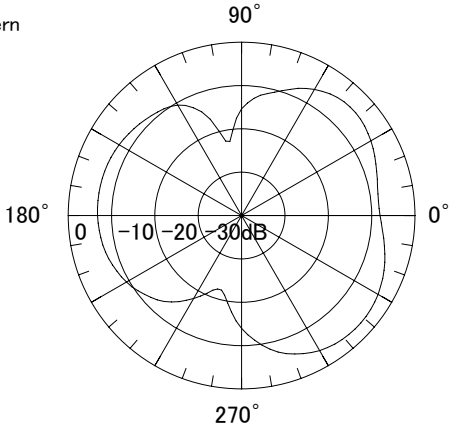

# Directivity／Gain

Polarization : V
Frequency : 2450 MHz
Standard Antenna Level: −51.5 dBm
Antenna Gain : 4.7 dBd ( 6.8 dBi )
Average Gain : −3.2 dBd ( −1.1 dBi )

Vertical Plane **F／B** Pattern
(Z-X PLANE)

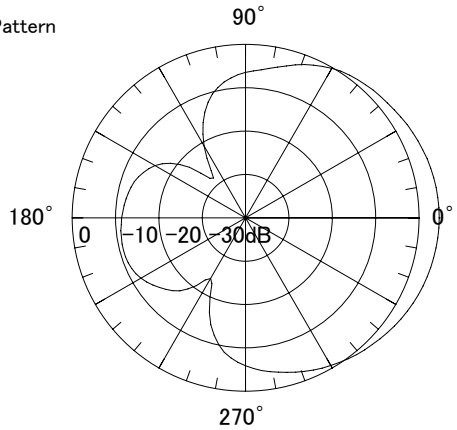


Polarization : H
Frequency : 2450 MHz
Standard Antenna Level: −51.5 dBm
Antenna Gain : −8.0 dBd ( −5.9 dBi )
Average Gain : −12.7 dBd ( −10.6 dBi )

Vertical Plane **F／B** Pattern
(Z-X PLANE)

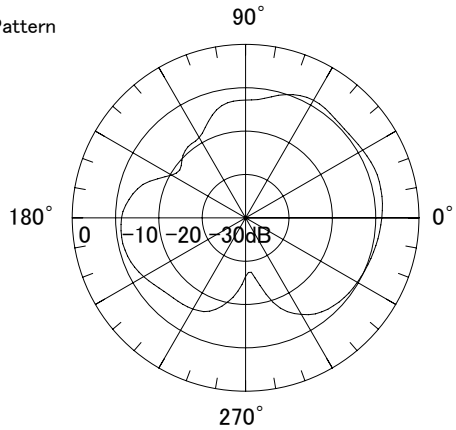


Polarization : V
Frequency : 2450 MHz
Standard Antenna Level: −51.5 dBm
Antenna Gain : −8.0 dBd ( −5.8 dBi )
Average Gain : −15.0 dBd ( −12.9 dBi )

Vertical Plane L/R Pattern
(Z-Y PLANE)

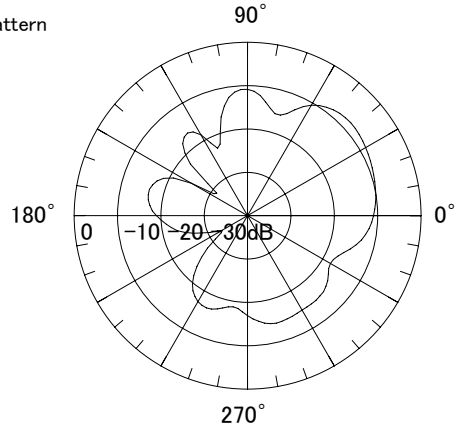


Polarization : H
Frequency : 2450 MHz
Standard Antenna Level: −51.5 dBm
Antenna Gain : 3.3 dBd ( 5.4 dBi )
Average Gain : −4.7 dBd ( −2.5 dBi )

Vertical Plane L/R Pattern
(Z-Y PLANE)

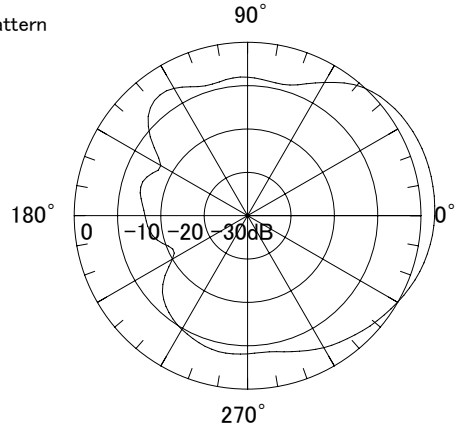


Polarization : V
Frequency : 2450 MHz
Standard Antenna Level: −51.5 dBm
Antenna Gain : −3.9 dBd ( −1.8 dBi )
Average Gain : −9.0 dBd ( −6.9 dBi )

Horizontal Plane Pattern
(X-Y PLANE)

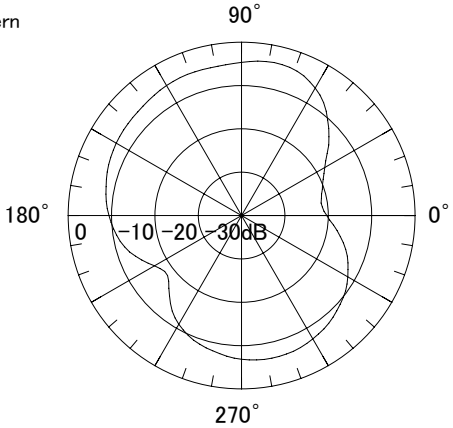


Polarization : H
Frequency : 2450 MHz
Standard Antenna Level: −51.5 dBm
Antenna Gain : −2.7 dBd ( −0.6 dBi )
Average Gain : −7.7 dBd ( −5.5 dBi )

Horizontal Plane Pattern
(X-Y PLANE)

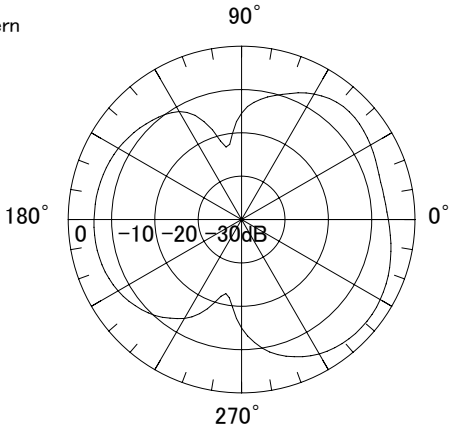

# Directivity／Gain

Polarization : V
Frequency : 2500 MHz
Standard Antenna Level: −51.0 dBm
Antenna Gain : 4.9 dBd ( 7.0 dBi )
Average Gain : −2.9 dBd ( −0.7 dBi )

Vertical Plane F／B Pattern
(Z-X PLANE)

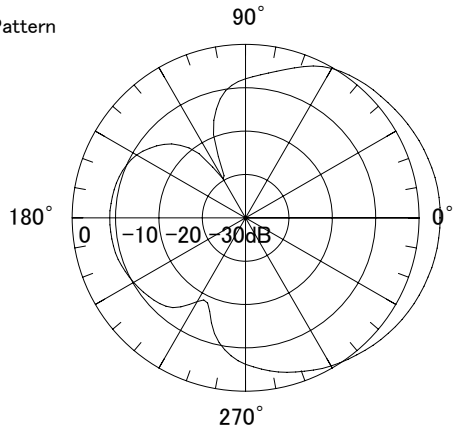


Polarization : H
Frequency : 2500 MHz
Standard Antenna Level: −51.0 dBm
Antenna Gain : −8.7 dBd ( −6.6 dBi )
Average Gain : −13.3 dBd ( −11.2 dBi )

Vertical Plane F／B Pattern
(Z-X PLANE)

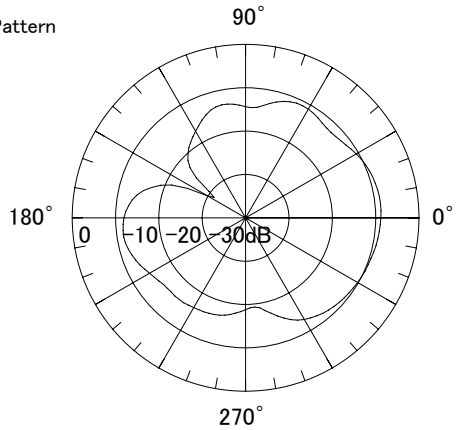


Polarization : V
Frequency : 2500 MHz
Standard Antenna Level: −51.0 dBm
Antenna Gain : −8.7 dBd ( −6.6 dBi )
Average Gain : −15.4 dBd ( −13.3 dBi )

Vertical Plane L/R Pattern
(Z-Y PLANE)

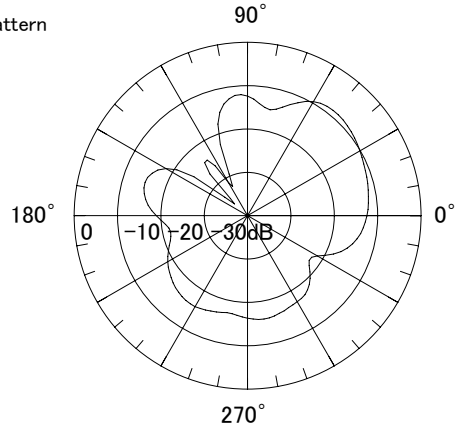


Polarization : H
Frequency : 2500 MHz
Standard Antenna Level: −51.0 dBm
Antenna Gain : 3.6 dBd ( 5.7 dBi )
Average Gain : −4.5 dBd ( −2.3 dBi )

Vertical Plane L/R Pattern
(Z-Y PLANE)

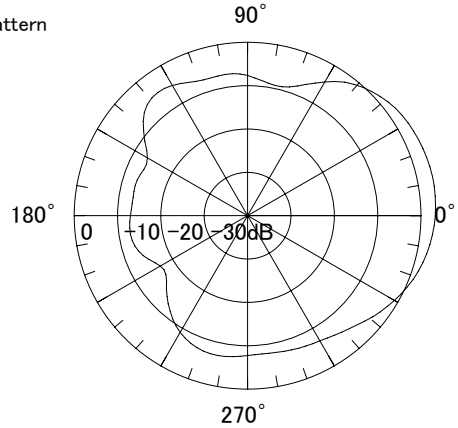


Polarization : V
Frequency : 2500 MHz
Standard Antenna Level: −51.0 dBm
Antenna Gain : −4.1 dBd ( −2.0 dBi )
Average Gain : −8.6 dBd ( −6.5 dBi )

Horizontal Plane Pattern
(X-Y PLANE)

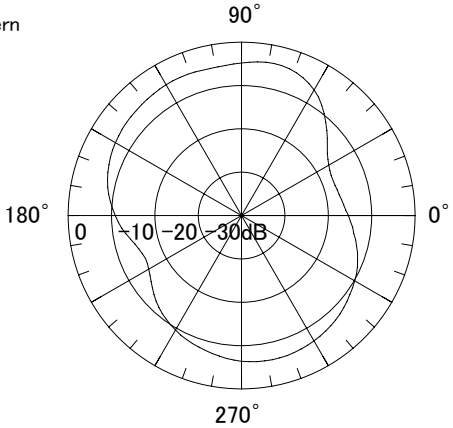


Polarization : H
Frequency : 2500 MHz
Standard Antenna Level: −51.0 dBm
Antenna Gain : −2.6 dBd ( −0.5 dBi )
Average Gain : −8.0 dBd ( −5.9 dBi )

Horizontal Plane Pattern
(X-Y PLANE)

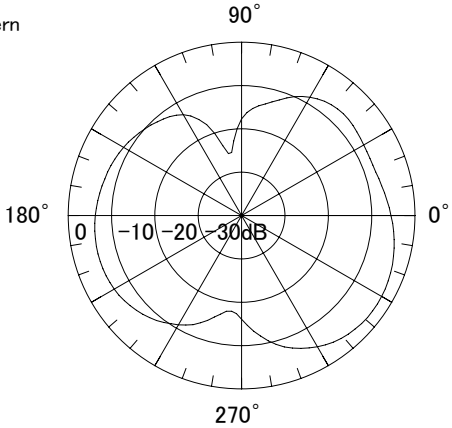

PRODUCT CODE

TB24043A0J0

参考図

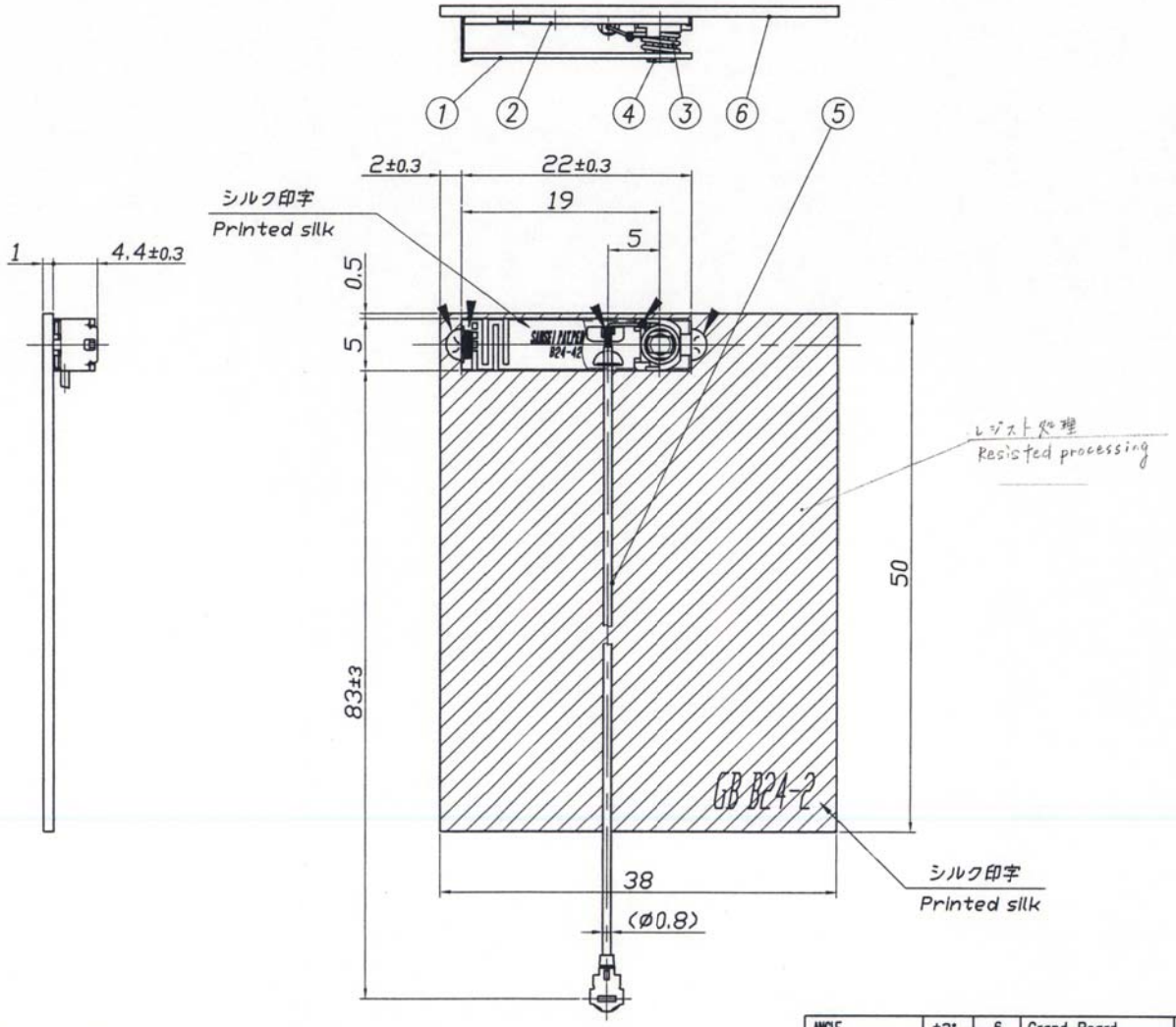


出図
'05.9.26
三省電機株式会社

| 承認 | 担当 |
|---|---|
| 技術部 '05.9.26 渡辺 | 技術 05.9.26 佐藤(M) |

注記

NOTICE:

1）製品仕様書はＡＮＴ－Ｓ－７９３による。

Specification : ANT-S-793

2）コネクター仕様：ヒロセ電機製／U.FL－LP－040

Specification of connector :HIROSE ERECTRIC CO.,LTD/U.FL-LP-040

3）ケーブル仕様：日星電気製／ＲＦ－ＭＦ５０１０（シロ）

Specification of cable:NISSEI ELECTRIC Co.,LTD/RF-MF5010 (White)

4）◢ 部５箇所はハンダ付け （無鉛ハンダ）

◢ Five places are soldered (Nonlead solder)

| | | | | | | |
|---|---|---|---|---|---|---|
| ANGLE | ±3° | 6 | Grand Board | 1 | Glass fabric base epoxy resin | t=1 |
| ABOVE 100 | ±0.8 | 5 | Cable | 1 | Coaxial Cables | Reference the note2,3 |
| ABOVE 50 TO 100 | ±0.5 | 4 | Guide Pin | 1 | Exchanged component PPO | Noryl color:gray |
| ABOVE 5 TO 50 | ±0.3 | 3 | Element | 1 | CP15 | ø0.4 |
| UP TO 50 | ±0.2 | 2 | Case | 1 | SPTE | Tinplate t=0.2 |
| TOLERANCES UNLESS OTHERWISE SPEC. | | 1 | Print Board | 1 | Glass fabric base epoxy resin | t=0.5 |
| | | LTR | PART NAME | QTY | MATERIAL | REMARK |

| MARK | SYME | DESCRIPION | DATE | APVD. |
|---|---|---|---|---|
| △ | | | | |

| PROJ. | UNIT | SCALE | 製品名 | MODEL No. |
|---|---|---|---|---|
| | mm | 2/1 | | ANTB24-043A0 |
| APVD. | CHKD. | DSGD. | 図名 | TITLE PRODUCT DRAWING |
| 技術部 '05.9.26 渡辺 | 設術 05.9.26 佐藤(M) | 技術 '05.9.26 根岸 | 図番 | DRAWING No. C05S0914 |

SANSEI ELECTRIC CO.,LTD.