Operation Mode :	802.11ac80B4	Test Date :	2017/10/3
Fundamental Frequency :	5775 MHz	Temp. / Humi. :	22.7deg_C/57RH
Operation Band :	BE CH HIGH	Test Engineer :	Enzo
EUT Pol. :	E2	Measurement Antenna Pol. :	Vertical

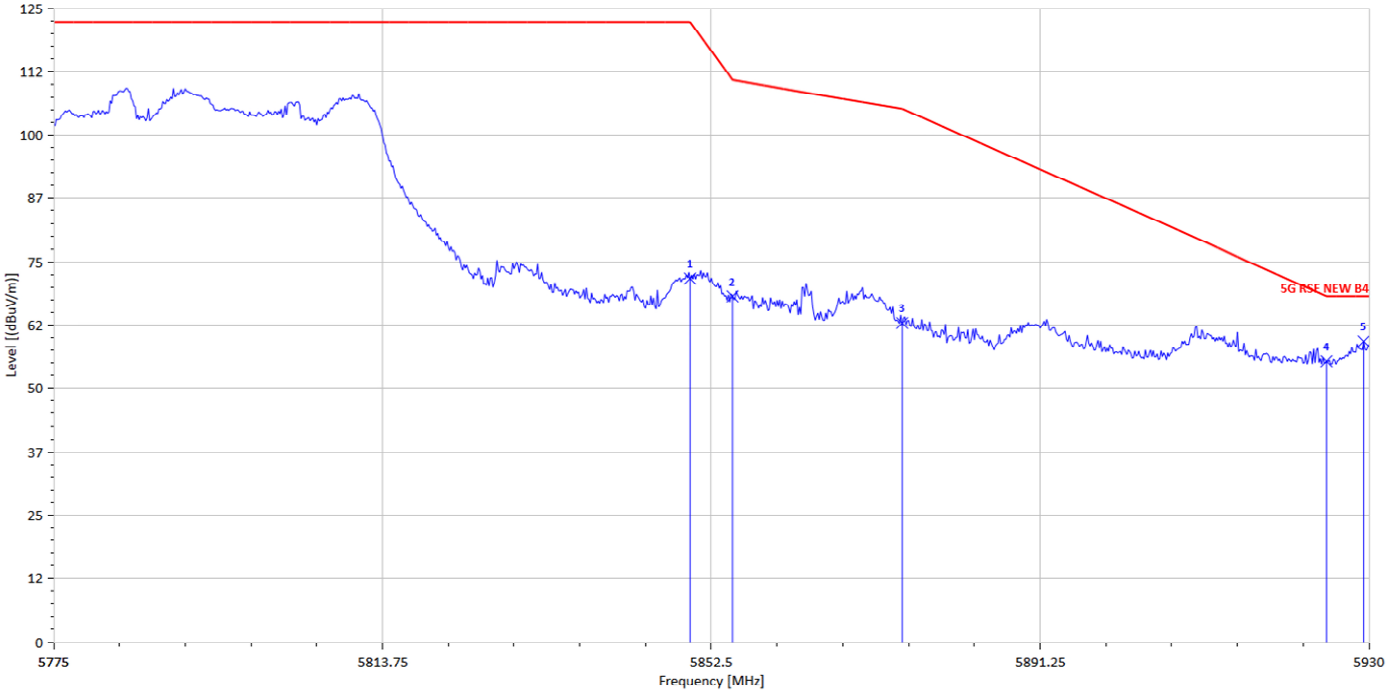

Freq. MHz	Note F/H/E/S	Detector Mode PK/QP/AV	Spectum Reading Level dBμV	Factor dB	Actual FS dBμV/m	Limit @3m dBμV/m	Margin dB
5850.00	E	Peak	62.25	9.49	71.74	122.23	-50.49
5855.00	S	Peak	58.62	9.58	68.20	110.83	-42.63
5875.00	S	Peak	53.27	9.63	62.90	105.23	-42.33
5925.00	S	Peak	45.34	10.01	55.35	68.23	-12.88
5929.38	S	Peak	49.21	10.06	59.28	68.23	-8.95

Unless otherwise stated the results shown in this test report refer only to the sample(s) tested and such sample(s) are retained for 90 days only.
除非另有說明，此報告結果僅對測試之樣品負責，同時此樣品僅保留90天。本報告未經本公司書面許可，不可部份複製。
This document is issued by the Company subject to its General Conditions of Service printed overleaf, available on request or accessible at www.sgs.com/terms_and_conditions.htm and, for electronic format documents, subject to Terms and Conditions for Electronic Documents at www.sgs.com/terms_e-document.htm. Attention is drawn to the limitation of liability, indemnification and jurisdiction issues defined therein. Any holder of this document is advised that information contained hereon reflects the Company's findings at the time of its intervention only and within the limits of Client's instructions, if any. The Company's sole responsibility is to its Client and this document does not exonerate parties to a transaction from exercising all their rights and obligations under the transaction documents. This document cannot be reproduced except in full, without prior written approval of the Company. Any unauthorized alteration, forgery or falsification of the content or appearance of this document is unlawful and offenders may be prosecuted to the fullest extent of the law.

Operation Mode :	802.11ac80B4	Test Date :	2017/10/3
Fundamental Frequency :	5775 MHz	Temp. / Humi. :	22.7deg_C/57RH
Operation Band :	BE CH HIGH	Test Engineer :	Enzo
EUT Pol. :	E2	Measurement Antenna Pol. :	Horizontal

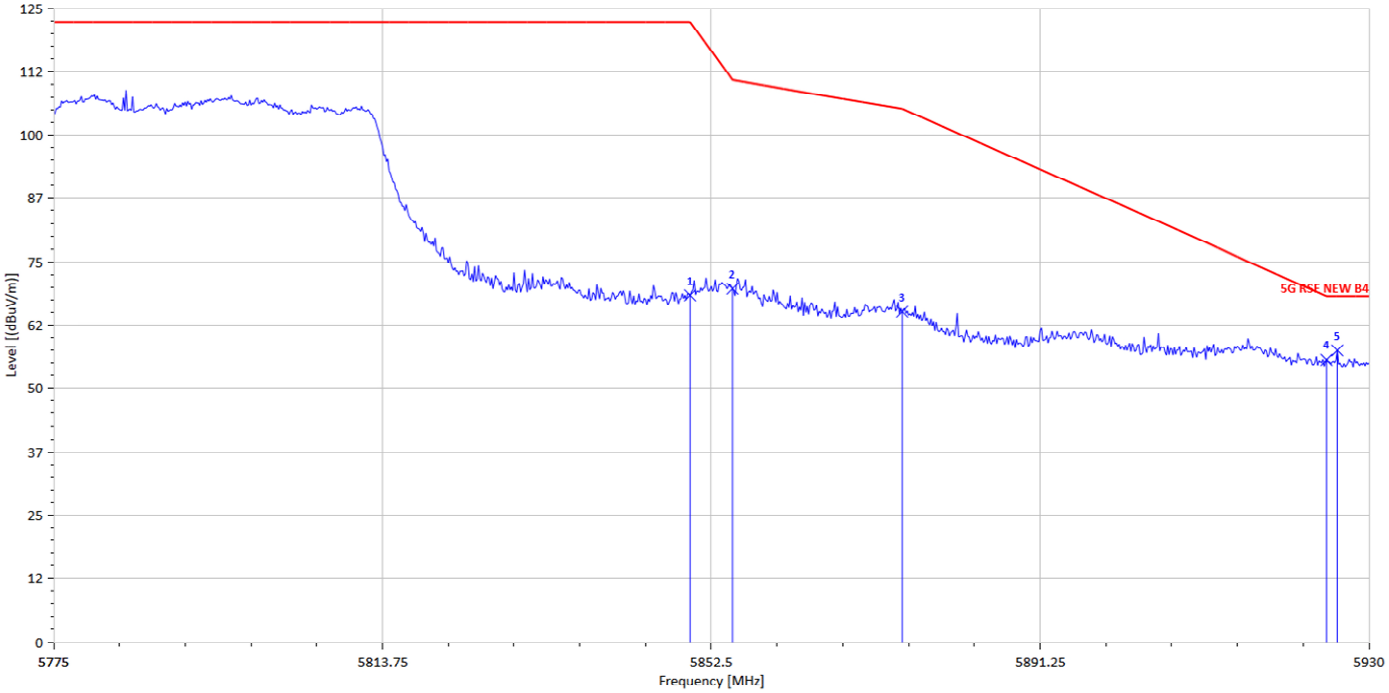

Freq. MHz	Note F/H/E/S	Detector Mode PK/QP/AV	Spectum Reading Level dBμV	Factor dB	Actual FS dBμV/m	Limit @3m dBμV/m	Margin dB
5850.00	E	Peak	58.92	9.49	68.41	122.23	-53.82
5855.00	S	Peak	60.13	9.58	69.71	110.83	-41.12
5875.00	S	Peak	55.52	9.63	65.15	105.23	-40.08
5925.00	S	Peak	45.60	10.01	55.61	68.23	-12.62
5926.28	S	Peak	47.46	10.03	57.49	68.23	-10.74

Unless otherwise stated the results shown in this test report refer only to the sample(s) tested and such sample(s) are retained for 90 days only.
除非另有說明，此報告結果僅對測試之樣品負責，同時此樣品僅保留90天。本報告未經本公司書面許可，不可部份複製。
This document is issued by the Company subject to its General Conditions of Service printed overleaf, available on request or accessible at www.sgs.com/terms_and_conditions.htm and, for electronic format documents, subject to Terms and Conditions for Electronic Documents at www.sgs.com/terms_e-document.htm. Attention is drawn to the limitation of liability, indemnification and jurisdiction issues defined therein. Any holder of this document is advised that information contained hereon reflects the Company's findings at the time of its intervention only and within the limits of Client's instructions, if any. The Company's sole responsibility is to its Client and this document does not exonerate parties to a transaction from exercising all their rights and obligations under the transaction documents. This document cannot be reproduced except in full, without prior written approval of the Company. Any unauthorized alteration, forgery or falsification of the content or appearance of this document is unlawful and offenders may be prosecuted to the fullest extent of the law.

12 TRANSMISSION IN THE ABSENCE OF DATA

12.1 Standard Applicable

According to §15.407(c)

The device shall automatically discontinue transmission in case of either absence of information to transmit or operational failure. These provisions are not intended to preclude the transmission of control or signaling information or the use of repetitive codes used by certain digital technologies to complete frame or burst intervals. Applicants shall include in their application for equipment authorization a description of how this requirement is met.

12.2 Result

While the EUT is not transmitting any information, the EUT can automatically discontinue transmission and become standby mode for power saving. The EUT can detect the controlling signal of ASK message transmitting from remote device and verify whether it shall resend or discontinue transmission.

Unless otherwise stated the results shown in this test report refer only to the sample(s) tested and such sample(s) are retained for 90 days only.
除非另有說明，此報告結果僅對測試之樣品負責，同時此樣品僅保留90天。本報告未經本公司書面許可，不可部份複製。
This document is issued by the Company subject to its General Conditions of Service printed overleaf, available on request or accessible at www.sgs.com/terms_and_conditions.htm and, for electronic format documents, subject to Terms and Conditions for Electronic Documents at www.sgs.com/terms_e-document.htm. Attention is drawn to the limitation of liability, indemnification and jurisdiction issues defined therein. Any holder of this document is advised that information contained hereon reflects the Company's findings at the time of its intervention only and within the limits of Client's instructions, if any. The Company's sole responsibility is to its Client and this document does not exonerate parties to a transaction from exercising all their rights and obligations under the transaction documents. This document cannot be reproduced except in full, without prior written approval of the Company. Any unauthorized alteration, forgery or falsification of the content or appearance of this document is unlawful and offenders may be prosecuted to the fullest extent of the law.

13 FREQUENCY STABILITY

13.1 Standard Applicable

Manufacturers of U-NII devices are responsible for ensuring frequency stability such that an emission is maintained within the band of operation under all conditions of normal operation as specified in the user's manual.

13.2 Measurement Procedure

1. The EUT was placed inside temperature chamber and powered and powered by nominal DC voltage.
2. Set EUT as normal operation.
3. Turn the EUT on and couple its output to spectrum.
4. Turn the EUT off and set the chamber to the highest temperature specified.
5. Allow sufficient time (approximately 30 min) for the temperature of the chamber to stabilize, turn the EUT and measure the operating frequency.
6. Repeat step with the temperature chamber set to the lowest temperature.

13.3 Test SET-UP

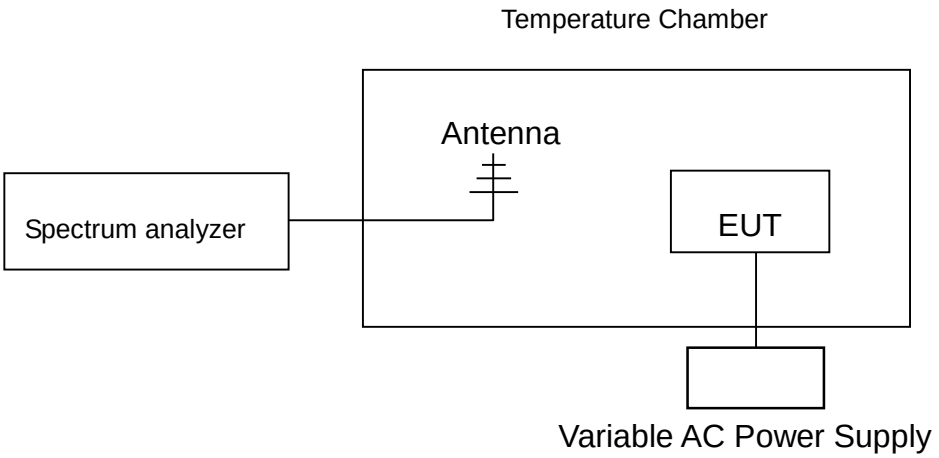

Unless otherwise stated the results shown in this test report refer only to the sample(s) tested and such sample(s) are retained for 90 days only.
除非另有說明，此報告結果僅對測試之樣品負責，同時此樣品僅保留90天。本報告未經本公司書面許可，不可部份複製。
This document is issued by the Company subject to its General Conditions of Service printed overleaf, available on request or accessible at www.sgs.com/terms_and_conditions.htm and, for electronic format documents, subject to Terms and Conditions for Electronic Documents at www.sgs.com/terms_e-document.htm. Attention is drawn to the limitation of liability, indemnification and jurisdiction issues defined therein. Any holder of this document is advised that information contained hereon reflects the Company's findings at the time of its intervention only and within the limits of Client's instructions, if any. The Company's sole responsibility is to its Client and this document does not exonerate parties to a transaction from exercising all their rights and obligations under the transaction documents. This document cannot be reproduced except in full, without prior written approval of the Company. Any unauthorized alteration, forgery or falsification of the content or appearance of this document is unlawful and offenders may be prosecuted to the fullest extent of the law.

13.4 Measurement Equipment Used:

SGS Conducted Room					
Name of Equipment	Manufacturer	Model	Serial Number	Calibration Date	Calibration Due
Spectrum Analyzer	KEYSIGHT	N9010A	MY51440113	06/20/2017	06/19/2018
Coaxial Cable 30cm	WOKEN	00100A1F1A195C	RF01	12/12/2016	12/11/2017
DC Block	PASTERNACK	PE8210	RF29	12/12/2016	12/11/2017
Splitter	RF-LAMBAD	RFLT2W1G18G	RF35	12/12/2016	12/11/2017
Attenuator	WOKEN	218FS-10	RF23	12/12/2016	12/11/2017
DC Power Supply	Agilent	E3640A	MY53140006	05/02/2017	05/01/2018
Temperature Chamber	TERCHY	MHK-120LK	1020582	06/13/2017	06/12/2018

13.5 Measurement Result

Operation Mode	802.11 a	Test Date	2017.09.28
Temperature	:23 ℃	Test By	Anthony
Humidity	:68 %		

Test Temp.	Test Voltage	Channel	Measured Frequency (MHz)	Spectrum Frequency (MHz)	ΔFrequency (MHz)
0 ℃	13.2V	36	5180	5,179.95508	0.00000867
		44	5220	5,219.95508	0.00000861
		48	5240	5,239.95508	0.00000857
		149	5745	5,744.95508	0.00000782
		157	5785	5,784.95508	0.00000777
		165	5825	5,824.93994	0.00001031
	10.8V	36	5180	5,179.95508	0.00000867
		44	5220	5,219.95508	0.00000861
		48	5240	5,239.95508	0.00000857
		149	5745	5,744.95508	0.00000782
		157	5785	5,784.95508	0.00000777
		165	5825	5,824.95508	0.00000771
25 ℃	12V	36	5180	5,179.95508	0.00000867
		44	5220	5,219.95508	0.00000861
		48	5240	5,239.95508	0.00000857
		149	5745	5,744.95508	0.00000782
		157	5785	5,784.95508	0.00000777
		165	5825	5,824.93994	0.00001031

Unless otherwise stated the results shown in this test report refer only to the sample(s) tested and such sample(s) are retained for 90 days only.
除非另有說明，此報告結果僅對測試之樣品負責，同時此樣品僅保留90天。本報告未經本公司書面許可，不可部份複製。
This document is issued by the Company subject to its General Conditions of Service printed overleaf, available on request or accessible at www.sgs.com/terms_and_conditions.htm and, for electronic format documents, subject to Terms and Conditions for Electronic Documents at www.sgs.com/terms_e-document.htm. Attention is drawn to the limitation of liability, indemnification and jurisdiction issues defined therein. Any holder of this document is advised that information contained hereon reflects the Company's findings at the time of its intervention only and within the limits of Client's instructions, if any. The Company's sole responsibility is to its Client and this document does not exonerate parties to a transaction from exercising all their rights and obligations under the transaction documents. This document cannot be reproduced except in full, without prior written approval of the Company. Any unauthorized alteration, forgery or falsification of the content or appearance of this document is unlawful and offenders may be prosecuted to the fullest extent of the law.

55 ℃	13.2V	36	5180	5,179.95508	0.00000867
		44	5220	5,219.95508	0.00000861
		48	5240	5,239.95508	0.00000857
		149	5745	5,744.95508	0.00000782
		157	5785	5,784.95508	0.00000777
		165	5825	5,824.95508	0.00000771
	10.8V	36	5180	5,179.95508	0.00000867
		44	5220	5,219.95508	0.00000861
		48	5240	5,239.95508	0.00000857
		149	5745	5,744.95508	0.00000782
		157	5785	5,784.95508	0.00000777
		165	5825	5,824.93994	0.00001031

Operation Mode	802.11 a	Test Date	2017.09.28
Temperature	:23 ℃	Test By	Anthony
Humidity	:68 %		

Test Temp.	Test Voltage	Channel	Measured Frequency (MHz)	Spectrum Frequency (MHz)	ΔFrequency (MHz)
0 ℃	13.2V	36	5180	5,179.97686	0.00000447
		44	5220	5,219.96383	0.00000693
		48	5240	5,239.96630	0.00000643
		149	5745	5,744.98989	0.00000176
		157	5785	5,784.93808	0.00001070
		165	5825	5,824.91751	0.00001416
	10.8V	36	5180	5,179.91538	0.00001634
		44	5220	5,219.94076	0.00001135
		48	5240	5,239.92097	0.00001508
		149	5745	5,744.90198	0.00001706
		157	5785	5,784.91191	0.00001523
		165	5825	5,824.99126	0.00000150
25 ℃	12	36	5180	5,179.93096	0.00001333
		44	5220	5,219.98582	0.00000272
		48	5240	5,239.95047	0.00000945
		149	5745	5,744.99455	0.00000095
		157	5785	5,784.93151	0.00001184
		165	5825	5,824.99624	0.00000065

Unless otherwise stated the results shown in this test report refer only to the sample(s) tested and such sample(s) are retained for 90 days only.
除非另有說明，此報告結果僅對測試之樣品負責，同時此樣品僅保留90天。本報告未經本公司書面許可，不可部份複製。
This document is issued by the Company subject to its General Conditions of Service printed overleaf, available on request or accessible at www.sgs.com/terms_and_conditions.htm and, for electronic format documents, subject to Terms and Conditions for Electronic Documents at www.sgs.com/terms_e-document.htm. Attention is drawn to the limitation of liability, indemnification and jurisdiction issues defined therein. Any holder of this document is advised that information contained hereon reflects the Company's findings at the time of its intervention only and within the limits of Client's instructions, if any. The Company's sole responsibility is to its Client and this document does not exonerate parties to a transaction from exercising all their rights and obligations under the transaction documents. This document cannot be reproduced except in full, without prior written approval of the Company. Any unauthorized alteration, forgery or falsification of the content or appearance of this document is unlawful and offenders may be prosecuted to the fullest extent of the law.

55 ℃	13.2V	36	5180	5,179.90759	0.00001784
		44	5220	5,219.92756	0.00001388
		48	5240	5,239.98998	0.00000191
		149	5745	5,744.99667	0.00000058
		157	5785	5,784.95772	0.00000731
		165	5825	5,824.90520	0.00001627
	10.8V	36	5180	5,179.97665	0.00000451
		44	5220	5,219.95946	0.00000777
		48	5240	5,239.93472	0.00001246
		149	5745	5,744.90493	0.00001655
		157	5785	5,784.93225	0.00001171
		165	5825	5,824.95701	0.00000738

Operation Mode	802.11 a	Test Date	2017.09.28
Temperature	:23 ℃	Test By	Anthony
Humidity	:68 %		

Test Temp.	Test Voltage	Channel	Measured Frequency (MHz)	Spectrum Frequency (MHz)	ΔFrequency (MHz)
0 ℃	13.2V	36	5180	5,179.95448	0.00000879
		44	5220	5,219.92300	0.00001475
		48	5240	5,239.94401	0.00001069
		149	5745	5,744.96288	0.00000646
		157	5785	5,784.97197	0.00000485
		165	5825	5,824.93718	0.00001078
	10.8V	36	5180	5,179.92338	0.00001479
		44	5220	5,219.94301	0.00001092
		48	5240	5,239.96525	0.00000663
		149	5745	5,744.90205	0.00001705
		157	5785	5,784.99310	0.00000119
		165	5825	5,824.98541	0.00000250
25 ℃	12V	36	5180	5,179.95376	0.00000893
		44	5220	5,219.93534	0.00001239
		48	5240	5,239.93910	0.00001162
		149	5745	5,744.90318	0.00001685
		157	5785	5,784.91056	0.00001546
		165	5825	5,824.96013	0.00000684

Unless otherwise stated the results shown in this test report refer only to the sample(s) tested and such sample(s) are retained for 90 days only.
除非另有說明，此報告結果僅對測試之樣品負責，同時此樣品僅保留90天。本報告未經本公司書面許可，不可部份複製。
This document is issued by the Company subject to its General Conditions of Service printed overleaf, available on request or accessible at www.sgs.com/terms_and_conditions.htm and, for electronic format documents, subject to Terms and Conditions for Electronic Documents at www.sgs.com/terms_e-document.htm. Attention is drawn to the limitation of liability, indemnification and jurisdiction issues defined therein. Any holder of this document is advised that information contained hereon reflects the Company's findings at the time of its intervention only and within the limits of Client's instructions, if any. The Company's sole responsibility is to its Client and this document does not exonerate parties to a transaction from exercising all their rights and obligations under the transaction documents. This document cannot be reproduced except in full, without prior written approval of the Company. Any unauthorized alteration, forgery or falsification of the content or appearance of this document is unlawful and offenders may be prosecuted to the fullest extent of the law.

55 ℃	13.2V	36	5180	5,179.90938	0.00001749
		44	5220	5,219.91989	0.00001535
		48	5240	5,239.96325	0.00000701
		149	5745	5,744.94423	0.00000971
		157	5785	5,784.94662	0.00000923
		165	5825	5,824.92161	0.00001346
	10.8V	36	5180	5,179.99931	0.00000013
		44	5220	5,219.97702	0.00000440
		48	5240	5,239.99999	0.00000000
		149	5745	5,744.97332	0.00000464
		157	5785	5,784.94013	0.00001035
		165	5825	5,824.97809	0.00000376

Operation Mode	802.11 a	Test Date	2017.09.28
Temperature	:23 ℃	Test By	Anthony
Humidity	:68 %		

Test Temp.	Test Voltage	Channel	Measured Frequency (MHz)	Spectrum Frequency (MHz)	ΔFrequency (MHz)
0 ℃	13.2V	36	5180	5,179.90031	0.00001925
		44	5220	5,219.95652	0.00000833
		48	5240	5,239.94659	0.00001019
		149	5745	5,744.91554	0.00001470
		157	5785	5,784.90947	0.00001565
		165	5825	5,824.93044	0.00001194
	10.8V	36	5180	5,179.96251	0.00000724
		44	5220	5,219.98620	0.00000264
		48	5240	5,239.90196	0.00001871
		149	5745	5,744.99087	0.00000159
		157	5785	5,784.98129	0.00000323
		165	5825	5,824.93034	0.00001196
25 ℃	12V	36	5180	5,179.98013	0.00000384
		44	5220	5,219.93912	0.00001166
		48	5240	5,239.94957	0.00000962
		149	5745	5,744.98629	0.00000239
		157	5785	5,784.92282	0.00001334
		165	5825	5,824.96462	0.00000607

Unless otherwise stated the results shown in this test report refer only to the sample(s) tested and such sample(s) are retained for 90 days only.
除非另有說明，此報告結果僅對測試之樣品負責，同時此樣品僅保留90天。本報告未經本公司書面許可，不可部份複製。
This document is issued by the Company subject to its General Conditions of Service printed overleaf, available on request or accessible at www.sgs.com/terms_and_conditions.htm and, for electronic format documents, subject to Terms and Conditions for Electronic Documents at www.sgs.com/terms_e-document.htm. Attention is drawn to the limitation of liability, indemnification and jurisdiction issues defined therein. Any holder of this document is advised that information contained hereon reflects the Company's findings at the time of its intervention only and within the limits of Client's instructions, if any. The Company's sole responsibility is to its Client and this document does not exonerate parties to a transaction from exercising all their rights and obligations under the transaction documents. This document cannot be reproduced except in full, without prior written approval of the Company. Any unauthorized alteration, forgery or falsification of the content or appearance of this document is unlawful and offenders may be prosecuted to the fullest extent of the law.

55 ℃	13.2V	36	5180	5,179.95048	0.00000956
		44	5220	5,219.90815	0.00001760
		48	5240	5,239.97848	0.00000411
		149	5745	5,744.98912	0.00000189
		157	5785	5,784.91751	0.00001426
		165	5825	5,824.90266	0.00001671
	10.8V	36	5180	5,179.94335	0.00001094
		44	5220	5,219.99957	0.00000008
		48	5240	5,239.92788	0.00001376
		149	5745	5,744.94294	0.00000993
		157	5785	5,784.93849	0.00001063
		165	5825	5,824.90896	0.00001563

Operation Mode	802.11 n_HT40	Test Date	2017.09.28
Temperature	:23 ℃	Test By	Anthony
Humidity	:68 %		

Test Temp.	Test Voltage	Channel	Measured Frequency (MHz)	Spectrum Frequency (MHz)	ΔFrequency (MHz)
0 ℃	13.2V	38	5190	5,189.94995	0.00000964
		46	5230	5,229.94995	0.00000957
		151	5755	5,754.94995	0.00000870
		159	5795	5,794.94995	0.00000864
	10.8V	38	5190	5,189.94995	0.00000964
		46	5230	5,229.94995	0.00000957
		151	5755	5,754.94995	0.00000870
		159	5795	5,794.94995	0.00000864
25 ℃	12V	38	5190	5,189.94995	0.00000964
		46	5230	5,229.94995	0.00000957
		151	5755	5,754.94995	0.00000870
		159	5795	5,794.94995	0.00000864
55 ℃	13.2V	38	5190	5,189.94995	0.00000964
		46	5230	5,229.94995	0.00000957
		151	5755	5,754.94995	0.00000870
		159	5795	5,794.94995	0.00000864
	10.8V	38	5190	5,189.94995	0.00000964
		46	5230	5,229.94995	0.00000957
		151	5755	5,754.94995	0.00000870
		159	5795	5,794.94995	0.00000864

Unless otherwise stated the results shown in this test report refer only to the sample(s) tested and such sample(s) are retained for 90 days only.
除非另有說明，此報告結果僅對測試之樣品負責，同時此樣品僅保留90天。本報告未經本公司書面許可，不可部份複製。
This document is issued by the Company subject to its General Conditions of Service printed overleaf, available on request or accessible at www.sgs.com/terms_and_conditions.htm and, for electronic format documents, subject to Terms and Conditions for Electronic Documents at www.sgs.com/terms_e-document.htm. Attention is drawn to the limitation of liability, indemnification and jurisdiction issues defined therein. Any holder of this document is advised that information contained hereon reflects the Company's findings at the time of its intervention only and within the limits of Client's instructions, if any. The Company's sole responsibility is to its Client and this document does not exonerate parties to a transaction from exercising all their rights and obligations under the transaction documents. This document cannot be reproduced except in full, without prior written approval of the Company. Any unauthorized alteration, forgery or falsification of the content or appearance of this document is unlawful and offenders may be prosecuted to the fullest extent of the law.

Operation Mode	802.11 n_HT40	Test Date	2017.09.28
Temperature	:23 ℃	Test By	Anthony
Humidity	:68 %		

Test Temp.	Test Voltage	Channel	Measured Frequency (MHz)	Spectrum Frequency (MHz)	ΔFrequency (MHz)
0 ℃	13.2V	38	5190	5,189.97870	0.00000410
		46	5230	5,229.91195	0.00001684
		151	5755	5,754.93321	0.00001161
		159	5795	5,794.98290	0.00000295
	10.8V	38	5190	5,189.91219	0.00001692
		46	5230	5,229.93513	0.00001240
		151	5755	5,754.93807	0.00001076
		159	5795	5,794.98011	0.00000343
25 ℃	12V	38	5190	5,189.95929	0.00000784
		46	5230	5,229.96643	0.00000642
		151	5755	5,754.96823	0.00000552
		159	5795	5,794.90844	0.00001580
55 ℃	13.2V	38	5190	5,189.96420	0.00000690
		46	5230	5,229.90625	0.00001793
		151	5755	5,754.90435	0.00001662
		159	5795	5,794.94334	0.00000978
	10.8V	38	5190	5,189.98221	0.00000343
		46	5230	5,229.98361	0.00000313
		151	5755	5,754.95708	0.00000746
		159	5795	5,794.94800	0.00000897

Operation Mode	802.11 n_HT40	Test Date	2017.09.28
Temperature	:23 ℃	Test By	Anthony
Humidity	:68 %		

Test Temp.	Test Voltage	Channel	Measured Frequency (MHz)	Spectrum Frequency (MHz)	ΔFrequency (MHz)
0 ℃	13.2V	38	5190	5,189.92992	0.00001350
		46	5230	5,229.99764	0.00000045
		151	5755	5,754.99932	0.00000012
		159	5795	5,794.96439	0.00000614
	10.8V	38	5190	5,189.90215	0.00001885
		46	5230	5,229.99928	0.00000014
		151	5755	5,754.97675	0.00000404
		159	5795	5,794.91295	0.00001502

Unless otherwise stated the results shown in this test report refer only to the sample(s) tested and such sample(s) are retained for 90 days only.
除非另有說明，此報告結果僅對測試之樣品負責，同時此樣品僅保留90天。本報告未經本公司書面許可，不可部份複製。
This document is issued by the Company subject to its General Conditions of Service printed overleaf, available on request or accessible at www.sgs.com/terms_and_conditions.htm and, for electronic format documents, subject to Terms and Conditions for Electronic Documents at www.sgs.com/terms_e-document.htm. Attention is drawn to the limitation of liability, indemnification and jurisdiction issues defined therein. Any holder of this document is advised that information contained hereon reflects the Company's findings at the time of its intervention only and within the limits of Client's instructions, if any. The Company's sole responsibility is to its Client and this document does not exonerate parties to a transaction from exercising all their rights and obligations under the transaction documents. This document cannot be reproduced except in full, without prior written approval of the Company. Any unauthorized alteration, forgery or falsification of the content or appearance of this document is unlawful and offenders may be prosecuted to the fullest extent of the law.

25 ℃	12V	38	5190	5,189.94666	0.00001028
		46	5230	5,229.96051	0.00000755
		151	5755	5,754.99164	0.00000145
		159	5795	5,794.96695	0.00000570
55 ℃	13.2V	38	5190	5,189.99147	0.00000164
		46	5230	5,229.92007	0.00001528
		151	5755	5,754.95559	0.00000772
		159	5795	5,794.95317	0.00000808
	10.8V	38	5190	5,189.91359	0.00001665
		46	5230	5,229.99239	0.00000146
		151	5755	5,754.93748	0.00001086
		159	5795	5,794.94459	0.00000956

Operation Mode	802.11 n_HT40	Test Date	2017.09.28
Temperature	:23 ℃	Test By	Anthony
Humidity	:68 %		

Test Temp.	Test Voltage	Channel	Measured Frequency (MHz)	Spectrum Frequency (MHz)	ΔFrequency (MHz)
0 ℃	13.2V	38	5190	5,189.96003	0.00000770
		46	5230	5,229.94882	0.00000979
		151	5755	5,754.91362	0.00001501
		159	5795	5,794.91892	0.00001399
	10.8V	38	5190	5,189.94820	0.00000998
		46	5230	5,229.90868	0.00001746
		151	5755	5,754.90428	0.00001663
		159	5795	5,794.95435	0.00000788
25 ℃	12	38	5190	5,189.97486	0.00000484
		46	5230	5,229.94064	0.00001135
		151	5755	5,754.91935	0.00001401
		159	5795	5,794.93677	0.00001091
55 ℃	13.2V	38	5190	5,189.98857	0.00000220
		46	5230	5,229.90711	0.00001776
		151	5755	5,754.99196	0.00000140
		159	5795	5,794.95600	0.00000759
	10.8V	38	5190	5,189.96073	0.00000757
		46	5230	5,229.93748	0.00001195
		151	5755	5,754.98478	0.00000264
		159	5795	5,794.91803	0.00001414

Unless otherwise stated the results shown in this test report refer only to the sample(s) tested and such sample(s) are retained for 90 days only.
除非另有說明，此報告結果僅對測試之樣品負責，同時此樣品僅保留90天。本報告未經本公司書面許可，不可部份複製。
This document is issued by the Company subject to its General Conditions of Service printed overleaf, available on request or accessible at www.sgs.com/terms_and_conditions.htm and, for electronic format documents, subject to Terms and Conditions for Electronic Documents at www.sgs.com/terms_e-document.htm. Attention is drawn to the limitation of liability, indemnification and jurisdiction issues defined therein. Any holder of this document is advised that information contained hereon reflects the Company's findings at the time of its intervention only and within the limits of Client's instructions, if any. The Company's sole responsibility is to its Client and this document does not exonerate parties to a transaction from exercising all their rights and obligations under the transaction documents. This document cannot be reproduced except in full, without prior written approval of the Company. Any unauthorized alteration, forgery or falsification of the content or appearance of this document is unlawful and offenders may be prosecuted to the fullest extent of the law.

14 ANTENNA REQUIREMENT

14.1 Standard Applicable

According to §15.203, an intentional radiator shall be designed to ensure that no antenna other than furnished by the responsible party shall be used with the device.
According to §15.407, If transmitting antennas of directional gain greater than 6 dBi are used, both the maximum conducted output power and the maximum power spectral density shall be reduced by the amount in dB that the directional gain of the antenna exceeds 6 dBi.

14.2 Antenna Connected Construction

PCB antenna designs are used.

The antenna is designed with permanent attached and no consideration of replacement. Please see EUT photo and antenna spec. for details.

~ End of Report ~

Unless otherwise stated the results shown in this test report refer only to the sample(s) tested and such sample(s) are retained for 90 days only.
除非另有說明，此報告結果僅對測試之樣品負責，同時此樣品僅保留90天。本報告未經本公司書面許可，不可部份複製。
This document is issued by the Company subject to its General Conditions of Service printed overleaf, available on request or accessible at www.sgs.com/terms_and_conditions.htm and, for electronic format documents, subject to Terms and Conditions for Electronic Documents at www.sgs.com/terms_e-document.htm. Attention is drawn to the limitation of liability, indemnification and jurisdiction issues defined therein. Any holder of this document is advised that information contained hereon reflects the Company's findings at the time of its intervention only and within the limits of Client's instructions, if any. The Company's sole responsibility is to its Client and this document does not exonerate parties to a transaction from exercising all their rights and obligations under the transaction documents. This document cannot be reproduced except in full, without prior written approval of the Company. Any unauthorized alteration, forgery or falsification of the content or appearance of this document is unlawful and offenders may be prosecuted to the fullest extent of the law.