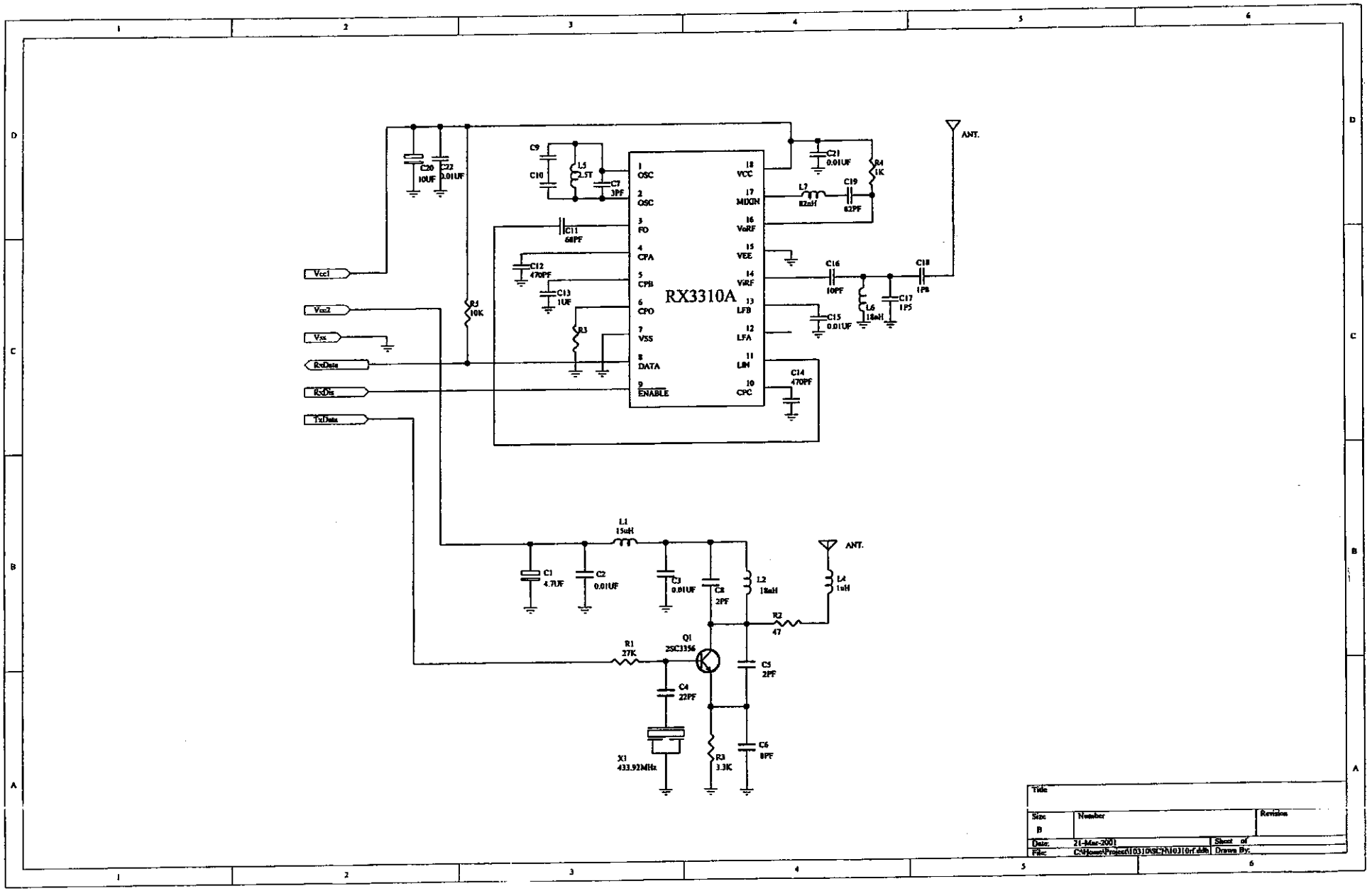
RX3310A
1 OSC
2 OSC
3 FO
4 CFA
5 CPB
6 CPO
7 VSS
8 DATA
9 ENABLE
18 VCC
17 MIXIN
16 VoRF
15 VEE
14 ViRF
13 LFB
12 LFA
11 LIN
10 CPC
C20 10UF
C22 0.01UF
C9
C10
L5 2.5T
C7 3PF
C11 68PF
C12 470PF
C13 1UF
R3
R5 10K
C21 0.01UF
R4 1K
L3 82nH
C19 82PF
C16 10PF
C18 1PF
L6 18nH
C17 1P5
C15 0.01UF
C14 470PF
ANT.
Vcc1
Vcc2
Vss
RxData
RxDis
TxData
L1 15nH
C1 4.7UF
C2 0.01UF
C3 0.01UF
C8 2PF
L2 18nH
L4 1nH
R2 47
R1 27K
Q1 2SC3356
C4 22PF
C5 2PF
C6 8PF
X1 433.92MHz
R3 3.3K
Title
Size B
Number
Revision
Date: 21-Mar-2001
Sheet of
File: C:\Hoser\Project\10310\SCh\10310r.ddb
Drawn By:

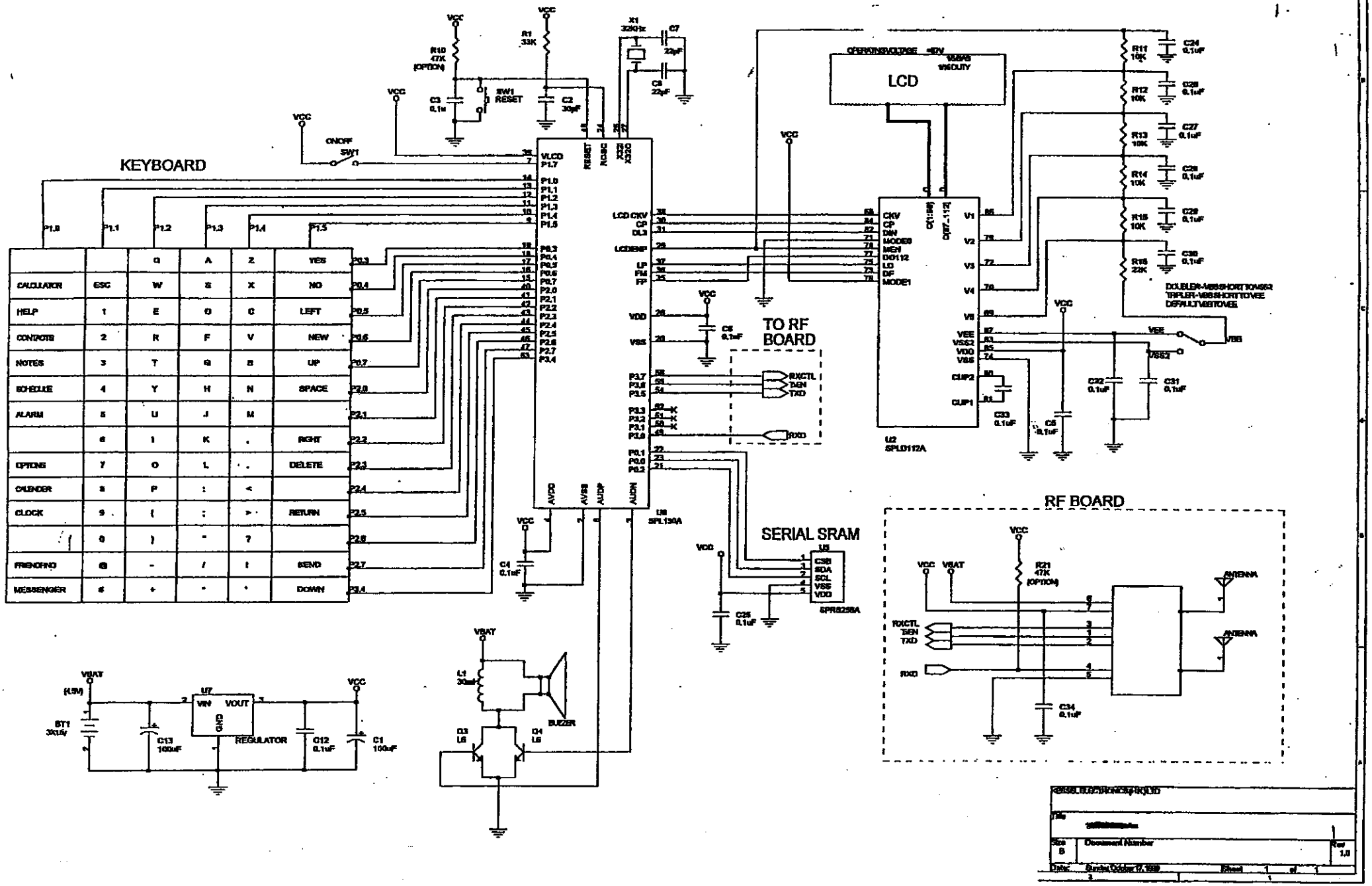
KEYBOARD
LCD
TO RF BOARD
SERIAL SRAM
RF BOARD
REGULATOR
BUZZER
ANTENNA
U8
SPL130A
U2
SPLD112A
U5
SPR5258A
U7
VIN
VOUT
GND
VCC
VBAT
RESET
ONOFF
SW1
R1
33K
R10
47K
(OPTION)
C2
30pF
C3
0.1u
X1
32KHz
C7
22pF
C8
22pF
C1
100uF
C13
100uF
C12
0.1uF
C4
0.1uF
C5
0.1uF
C25
0.1uF
C34
0.1uF
C32
0.1uF
C31
0.1uF
C33
0.1uF
R21
47K
(OPTION)
L1
30uH
Q3
L6
Q4
L6
BT1
3X1.5V
RXCTL
DEN
TXD
RXD
DOUBLER-VBBSHORTTOVEE
TRIPLER-VBBSHORTTOVEE
DEFAULTVBBTOVEE