902 – 928 MHz – Single Band Antenna (includes frequencies of 915 ISM and ZigBee US)

Part Number: 1513168-1

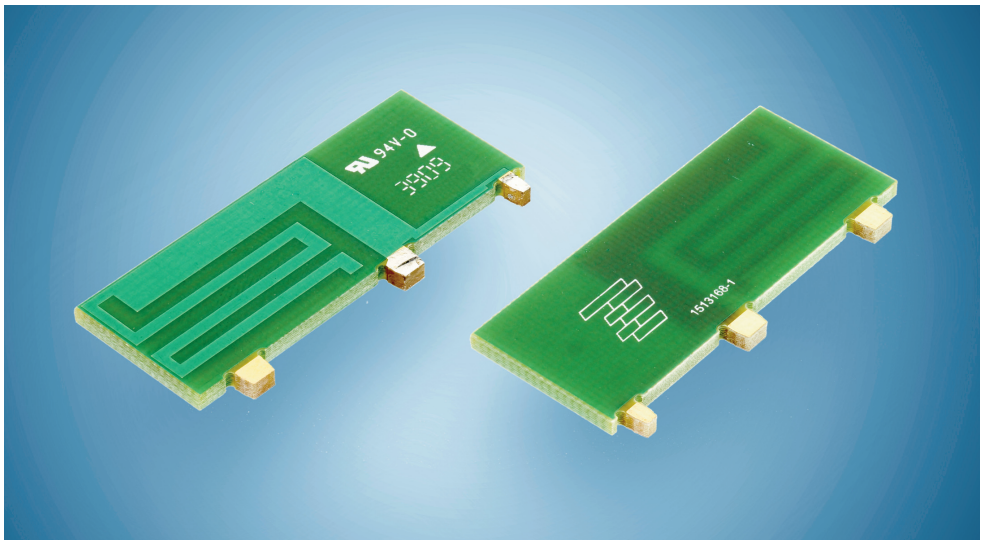

Product Facts

- **This small embedded antenna provides the most reliable easy-to-use, and adjustment-free antenna technology for handling during assembly and implementation by developers.**
- **Small and lightweight.**
- **RoHS compliant**

Recommendations

- **Minimum or no matching circuits required.**
- **Bandwidth and performance is dependent on ground plane size. Suggested minimum ground plane length from the antenna feed is 90 mm.**

Specifications

Frequency Range (MHz)	902 – 928
Peak Gain	0 dBi
VSWR	< 2.0:1
Polarization	Linear
Azimuth Beamwidth	Omni-directional
Power Handling	10 Watt cw
Feed Point Impedance	50 Ohms unbalanced
Size	38.10 mm x 15.24 mm x 1.57 mm
Weight	< 2 g.
Mounting	Tabmounted with plated through holes. See page 2
Keep Out Area	See diagram on page 2

Test Orientation in Free Space

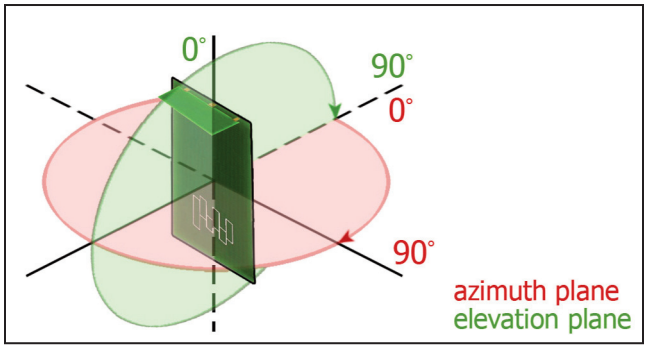

VSWR

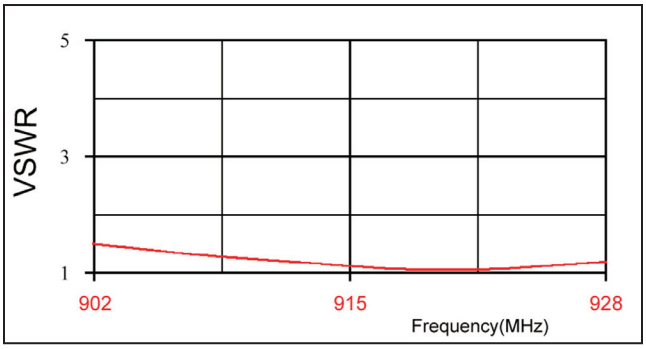

Azimuth

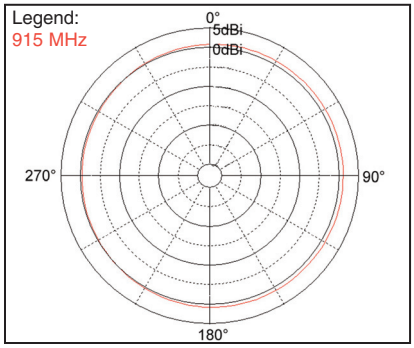

Elevation

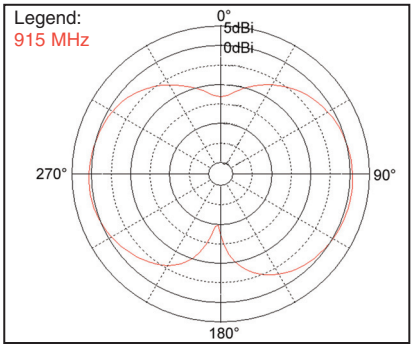

Efficiency

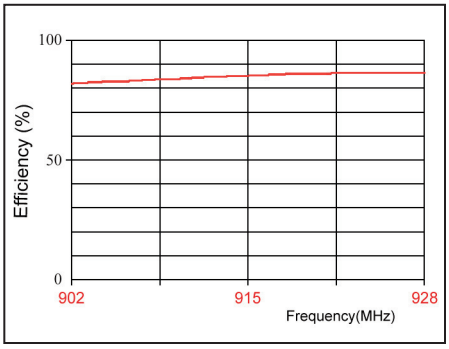

Catalog 2-1773459-5
Revised 03-11

www.te.com
www.antenna.te.com

Dimensions are in inches and millimeters unless otherwise sspecified. Values in brackets are metric equivalents.

Dimensions are shown for reference purposes only. Specifications subject to change.

USA: 1-800-522-6752
Canada: 1-905-475-6222
Germany: +49 (0) 6251-133-1999
UK: +44 (0) 800-267666
Netherlands: +31 (0) 73-6246-999
China: +86 (0) 400-820-6015
For other country number go to te.com/supportcenter

902 – 928 MHz – Single Band Antenna (includes frequencies of 915 ISM and ZigBee US)

Part Number: 1513168-1

Mounting Guide

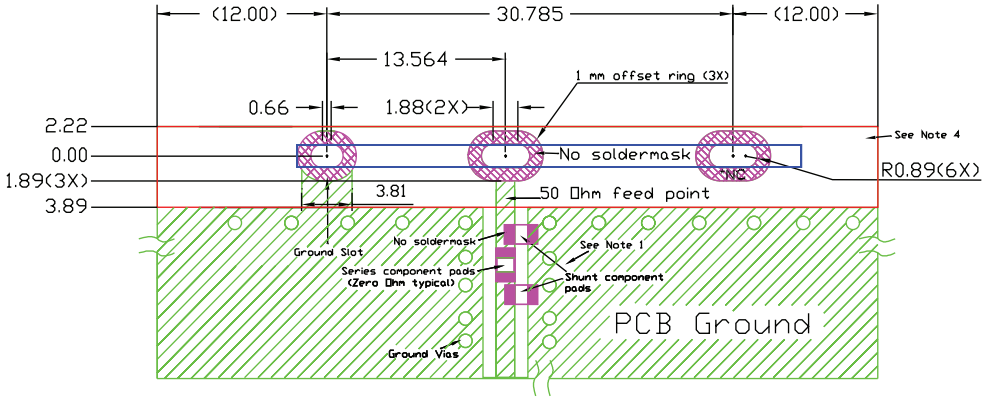

NOTES:
1. Suggested matching component pads.
2. Antenna must be mounted on the edge of PCB.
3. NC = No connection (mechanical mounting pads).
4. No copper allowed in designated area on all PCB layers –
5. For more information please call TE.

Dimensions: mm
Diagram is not to scale

Keep Out Area

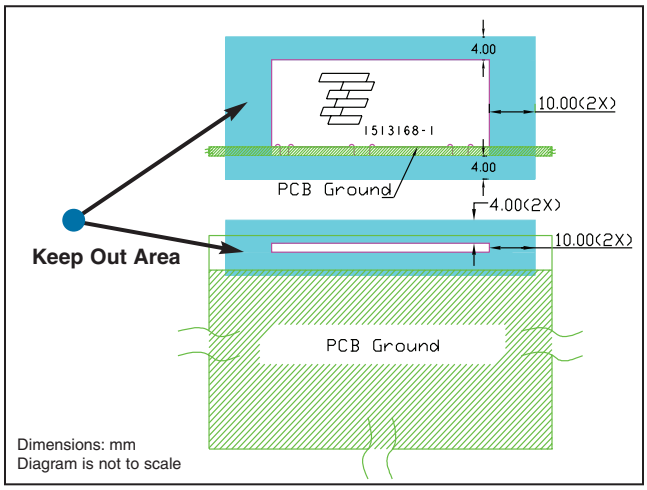

Dimensions: mm
Diagram is not to scale

Approx. Dimensions

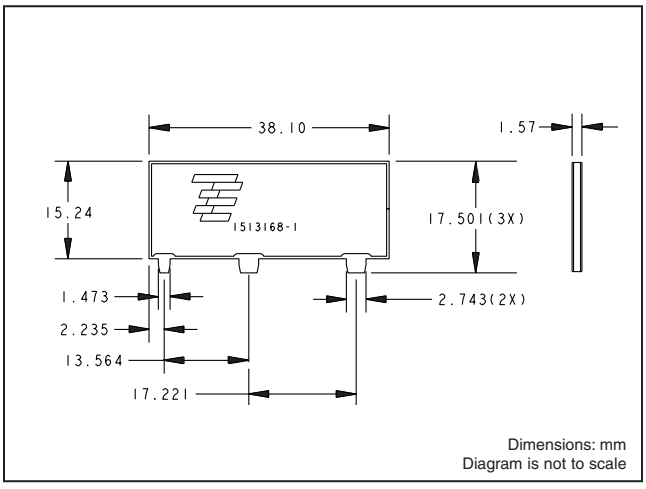

Dimensions: mm
Diagram is not to scale

© 2011 Tyco Electronics Corporation. All Rights Reserved.

2-1773459-5-CIS-PDF-03-11

TE (logo) and TE Connectivity are trademarks of the TE Connectivity group of companies and its licensors.

Other logos, product and Company names mentioned herein may be trademarks of their respective owners.
ZigBee is a trademark of ZigBee Alliance.

While TE has made every reasonable effort to ensure the accuracy of the information in this catalog, TE does not guarantee that it is error-free, nor does TE make any other representation, warranty or guarantee that the information is accurate, correct, reliable or current. TE reserves the right to make any adjustments to the information contained herein at any time without notice. TE expressly disclaims all implied warranties regarding the information contained herein, including, but not limited to, any implied warranties of merchantability or fitness for a particular purpose. The dimensions in this catalog are for reference purposes only and are subject to change without notice. Specifications are subject to change without notice.

Consult TE for the latest dimensions and design specifications.

9565 Soquel Drive
Aptos, CA 95003
(+ 831) 662-1174
http://www.antenna.te.com