MultiSync

User's Manual

Bedienerhandbuch

Manual del usuario

Manuel Utilisateur

Manuale utente

NEC

For the Customer to use in U.S.A. or Canada

Canadian Department of Communications Compliance Statement

DOC: This Class B digital apparatus meets all requirements of the Canadian Interference-Causing Equipment Regulations.
Cet appareil numérique de la classe B respecte toutes les exigences du Règlement sur le matériel brouiller du Canada.

C-UL: Bears the C-UL Mark and is in compliance with Canadian Safety Regulations according to CSA C22.2 #950.
Ce produit porte la marque 'C-UL' et se conforme aux règlements de sûrele Canadiens selon CAN/CSA C22.2 No. 950.

FCC Information

1. Use the attached specified cables with the MultiSync colour monitor so as not to interfere with radio and television reception.
   (1) The power supply cord you use must have been approved by and comply with the safety standards of U.S.A. & Europe, and meet the following condition.

Power supply cord Length Plug shape	Non shield type, 2-power code conductor (1.8 m) 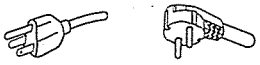 U.S.A Continental Europe

   (2) Shielded video signal cable. Use of other cables and adapters may cause interference with radio and television reception.

2. This equipment has been tested and found to comply with the limits for a Class B digital device, pursuant to part 15 of the FCC Rules. These limits are designed to provide reasonable protection against harmful interference in a residential installation. This equipment generates, uses, and can radiate radio frequency energy, and, if not installed and used in accordance with the instructions, may cause harmful interference to radio communications. However, there is no guarantee that interference will not occur in a particular installation. If this equipment does cause harmful interference to radio or television reception, which can be determined by turning the equipment off and on, the user is encouraged to try to correct the interference by one or more of the following measures:
   - Reorient or relocate the receiving antenna.
   - Increase the separation between the equipment and receiver.
   - Connect the equipment into an outlet on a circuit different from that to which the receiver is connected.
   - Consult your dealer or an experienced radio/TV technician for help.

   If necessary, the user should contact the dealer or an experienced radio/television technician for additional suggestions. The user may find the following booklet, prepared by the Federal Communications Commission, helpful: "How to Identify and Resolve Radio-TV Interference Problems." This booklet is available from the U.S. Government Printing Office, Washington, D.C., 20402, Stock No. 004-000-00345-4.

FCC Statement

This device complies with Part 15 of FCC Rules. Operation is subject to the following two conditions. (1) This device may not cause harmful interference, and (2) this device must accept any interference received, including interference that may cause undesired operation.

U.S. Responsible party:	**NEC-Mitsubishi Electronics Display of America, Inc.**
Address:	**1250 N. Arlington Heights Road Itasca, Illinois 60143-1248**
Tel. No.:	**(630)467-3000**

Type of Product:	Computer Monitor
Equipment Classification:	Class B Peripheral
Models:	M6JNL1503

Caution: Changes or modifications not expressly approved by the party responsible for compliance could void the user's authority to operate the equipment.

TCO’99

MultiSync Model

Congratulations! You have just purchased a TCO’99 approved and labeled product! Your choice has provided you with a product developed for professional use. Your purchase has also contributed to reducing the burden on the environment and also to the further development of environmentally adapted electronics products.

Why do we have environmentally labelled computers?

In many countries, environmental labelling has become an established method for encouraging the adaptation of goods and services to the environment. The main problem, as far as computers and other electronics equipment are concerned, is that environmentally harmful substances are used both in the products and during the manufacturing. Since it has not been possible for the majority of electronics equipment to be recycled in a satisfactory way, most of these potentially damaging substances sooner or later enter Nature.

There are also other characteristics of a computer, such as energy consumption levels, that are important from the viewpoints of both the work (Internal) and natural (external) environments. Since all methods of conventional electricity generation have a negative effect on the environment (acidic and climate-influencing emissions, radioactive waste, etc.), it is vital to conserve energy. Electronics equipment in offices consume an enormous amount of energy since they are often left running continuously.

What does labelling involve?

This product meets the requirements for the TCO’99 scheme which provides for international and environmental labelling of personal computers. The labelling scheme was developed as a joint effort by the TCO (The Swedish Confederation of Professional Employees), Svenska Naturskyddsforeningen (The Swedish Society for Nature Conservation) and Statens Energimyndighet (The Swedish National Energy Administration).

The requirements cover a wide range of issues: environment, ergonomics, usability, emission of electrical and magnetic fields, energy consumption and electrical and fire safety.

The environmental demands concern restrictions on the presence and use of heavy metals, brominated and chlorinated flame retardants, CFCs (freons) and chlorinated solvents, among other things. The product must be prepared for recycling and the manufacturer is obliged to have an environmental plan which must be adhered to in each country where the company implements its operational policy. The energy requirements include a demand that the computer and/or display, after a certain period of inactivity, shall reduce its power consumption to a lower level in one or more stages. The length of time to reactivate the computer shall be reasonable for the user.

Labelled products must meet strict environmental demands, for example, in respect of the reduction of electric and magnetic fields, physical and visual ergonomics and good usability.

Environmental Requirements

Flame retardants

Flame retardants are present in printed circuit boards, cables, wires, casings and housings. In turn, they delay the spread of fire. Up to thirty percent of the plastic in a computer casing can consist of flame retardant substances. Most flame retardants contain bromine or chloride and these are related to another group of environmental toxins, PCBs, which are suspected to give rise to severe health effects, including reproductive damage in fisheating birds and mammals, due to the bioaccumulative* processes. Flame retardants have been found in human blood and researchers fear that disturbances in foetus development may occur.

TCO'99 demand requires that plastic components weighing more than 25 grams must not contain flame retardants with organically bound chlorine and bromine. Flame retardants are allowed in the printed circuit boards since no substitutes are available.

Lead**

Lead can be found in picture tubes, display screens, solders and capacitors. Lead damages the nervous system and in higher doses, causes lead poisoning.

TCO'99 requirement permits the inclusion of lead since no replacement has yet been developed.

Cadmium**

Cadmium is present in rechargeable batteries and in the colourgenerating layers of certain computer displays. Cadmium damages the nervous system and is toxic in high doses.

TCO'99 requirement states that batteries, the colourgenerating layers of display screens and the electrical or electronics components must not contain any cadmium.

Mercury**

Mercury is sometimes found in batteries, relays and switches, Mercury damages the nervous system and is toxic in high doses.

TCO'99 requirement states that batteries may not contain any Mercury. It also demands that no mercury is present in any of the electrical or electronics components associated with the display unit.

CFCs (freons)

CFCs (freons) are sometimes used for washing printed circuit boards. CFCs break down ozone and thereby damage the ozone layer in the stratosphere, causing increased reception on Earth of ultraviolet light with consequent increased risks of skin cancer (malignant melanoma).

The relevant TCO'99 requirement; Neither CFCs nor HCFCs may be used during the manufacturing and assembly of the product or its packaging.

* Bio-accumulative is defined as substances which accumulate within living organisms.

** Lead, Cadmium and Mercury are heavy metals which are Bioaccumulative.

To obtain complete information on the environmental criteria document, order from:

TCO Development Unit
SE-114 94 Stockholm
SWEDEN
FAX Number: +46 8 782 92 07

E-mail (Internet): development@tco.se

You may also obtain current information on TCO'99 approved and labelled products by visiting their website at:
http://www.tco-info.com/

TCO’95

MultiSync Model

Congratulations! You have just purchased a TCO’95 approved and labeled product! Your choice has provided you with a product developed for professional use. Your purchase has also contributed to reducing the burden on the environment and also, to the further development of environmentally adapted electronics products.

Why do we have environmentally labelled computers?

In many countries, environmental labelling has become an established method for encouraging the adaptation of goods and services to the environment. The main problem, as far as computers and other electronics equipment are concerned, is that environmentally harmful substances are used both in the products and during the manufacturing. Since it has not been possible for the majority of electronics equipment to be recycled in a satisfactory way, most of these potentially damaging substances sooner or later enter Nature.

There are also other characteristics of a computer, such as energy consumption levels, that are important from the viewpoints of both the work (Internal) and natural (external) environments. Since all methods of conventional electricity generation have a negative effect on the environment (acidic and climate-influencing emissions, radioactive waste, etc.), it is vital to conserve energy. Electronics equipment in offices consume an enormous amount of energy since they are often left running continuously.

What does labelling involve?

This product meets the requirements for the TCO’95 scheme which provides for international and environmental labelling of personal computers. The labelling scheme was developed as a joint effort by the TCO (The Swedish Confederation of Professional Employees), Naturskyddsforeningen (The Swedish Society for Nature Conservation) and NUTEK (The National Board for Industrial and Technical Development in Sweden).

The requirements cover a wide range of issues: environment, ergonomics, usability, emission of electrical and magnetic fields, energy consumption and electrical and fire safety.

The environmental demands concern restrictions on the presence and use of heavy metals, brominated and chlorinated flame retardants, CFCs (freons) and chlorinated solvents, among other things. The product must be prepared for recycling and the manufacturer is obliged to have an environmental plan which must be adhered to in each country where the company implements its operational policy. The energy requirements include a demand that the computer and/or display, after a certain period of inactivity, shall reduce its power consumption to a lower level in one or more stages. The length of time to reactivate the computer shall be reasonable for the user.

Labelled products must meet strict environmental demands, for example, in respect of the reduction of electric and magnetic fields, physical and visual ergonomics and good usability.

TCO’95 is a co-operative project between TCO (The Swedish Confederation of Professional Employees), Naturskyddsforeningen (The Swedish Society for Nature Conservation) and NUTEK (The National Board for Industrial and Technical Development in Sweden).

Environmental Requirements

Brominated flame retardants

Brominated flame retardants are present in printed circuit boards, cables, wires, casings and housings. In turn, they delay the spread of fire. Up to thirty percent of the plastic in a computer casing can consist of flame retardant substances. These are related to another group of environmental toxins, PCBs, which are suspected to give rise to similar harm, including reproductive damage in fisheating birds and mammals, due to the bio-accumulative* processes. Flame retardants have been found in human blood and researchers fear that disturbances in foetus development may occur.

TCO'95 demand requires that plastic components weighing more than 25 grams must not contain organically bound chlorine and bromine.

Lead**

Lead can be found in picture tubes, display screens, solders and capacitors. Lead damages the nervous system and in higher doses, causes lead poisoning.

TCO'95 requirement permits the inclusion of lead since no replacement has yet been developed.

Cadmium**

Cadmium is present in rechargeable batteries and in the colourgenerating layers of certain computer displays. Cadmium damages the nervous system and is toxic in high doses.

TCO'95 requirement states that batteries may not contain more than 25 ppm (parts per million) of cadmium. The colourgenerating layers of display screens must not contain any cadmium.

Mercury**

Mercury is sometimes found in batteries, relays, switches, and back-light systems, Mercury damages the nervous system and is toxic in high doses.

TCO'95 requirement states that batteries may not contain more than 25 ppm (parts per million) of mercury. It also demands that no mercury is present in any of the electrical or electronics components concerned with the display unit, except the back-light system.

CFCs (freons)

CFCs (freons) are sometimes used for washing printed circuit boards and in the manufacturing of expanded foam for packaging. CFCs break down ozone and thereby damage the ozone layer in the stratosphere, causing increased reception on Earth of ultraviolet light with consequent increased risks of skin cancer (malignant melanoma).

The relevant TCO'95 requirement; Neither CFCs nor HCFCs may be used during the manufacturing of the product or its packaging.

* Bio-accumulative is defined as substances which accumulate within living organisms.

** Lead, Cadmium and Mercury are heavy metals which are Bioaccumulative.

To obtain complete information on the environmental criteria document, order from:

TCO Development Unit
SE-114 94 Stockholm
SWEDEN
FAX Number: +46 8 782 92 07

E-mail (Internet): development@tco.se

You may also obtain current information on TCO'95 approved and labelled products by visiting their website at:
http://www.tco-info.com/

Index

Warning, Caution , Declaration.....English-1
Contents.....English-2
Quick Start English-3
Controls.....English-7
Recommended Use English-11
Specifications English-13
Features English-14
Troubleshooting English-15

Warnung, Vorsicht , Erklärung..... Deutsch-1
Inhalt Deutsch-2
Kurzanleitung Deutsch-3
Bedienelemente Deutsch-7
Einsatzempfehlungen Deutsch-11
Technische Daten Deutsch-13
Merkmale und Funktionen Deutsch-14
Fehlerbehebung Deutsch-15

Advertencia, Peligro , Declaración.....Español-1
Contenido Español-2
Inic rápido Español-3
Controles Español-7
Uso recomendado Español-11
Especificaciones Español-13
Características Español-14
Solución de problemas Español-15

Avertissement, Attention, Déclaration Français-1
Sommaire.....Français-2
Mise en marche rapide Français-3
Commandes Français-7
Conseils d'utilisation Français-11
Caractéristiques Français-13
Fonctions Français-14
Dépannage Français-15

Avvertenza, Attenzione ,Dichiarazione..... Italiano-1
Contenuto Italiano-2
Guida rapida Italiano-3
Controlli Italiano-7
Uso consigliato Italiano-11
Specifiche tecniche Italiano-13
Caratteristiche.....Italiano-14
Ricerca guasti Italiano-15

English

Deutsch

Español

Français

Italiano

WARNING

TO PREVENT FIRE OR SHOCK HAZARDS, DO NOT EXPOSE THIS UNIT TO RAIN OR MOISTURE. ALSO, DO NOT USE THIS UNIT'S POLARIZED PLUG WITH AN EXTENSION CORD RECEPTACLE OR OTHER OUTLETS UNLESS THE PRONGS CAN BE FULLY INSERTED.
REFRAIN FROM OPENING THE CABINET AS THERE ARE HIGH VOLTAGE COMPONENTS INSIDE. REFER SERVICING TO QUALIFIED SERVICE PERSONNEL.

CAUTION

RISK OF ELECTRIC SHOCK • DO NOT OPEN

CAUTION TO REDUCE THE RISK OF ELECTRIC SHOCK, DO NOT REMOVE COVER (OR BACK). NO USER SERVICEABLE PARTS INSIDE. REFER SERVICING TO QUALIFIED SERVICE PERSONNEL.

This symbol warns user that uninsulated voltage within the unit may have sufficient magnitude to cause electric shock. Therefore, it is dangerous to make any kind of contact with any part inside this unit.

This symbol alerts the user that important literature concerning the operation and maintenance of this unit has been included. Therefore, it should be read carefully in order to avoid any problems.

Caution:

When operating the MultiSync with a 100-240V AC power source in Europe, use the power cord provided with the monitor.

In the UK, a BS approved power cord with a moulded plug has a Black (five Amps) fuse installed for use with this equipment. If a power cord is not supplied with this equipment please contact your supplier.

When operating the MultiSync with a 100-240V AC power source in Australia, use the power cord provided with the monitor.

For all other cases, use a power cord that matches the AC voltage of the power outlet and has been approved by and complies with the safety standard of your particular country.

Declaration

Declaration of the Manufacturer

We hereby certify that the colour monitor MultiSync
is in compliance with

Council Directive 73/23/EEC:
–EN 60950
Council Directive 89/336/EEC:
–EN 55022
–EN 61000-3-2
–EN 61000-3-3
–EN 55024

and marked with

CE

NEC-Mitsubishi Electric Visual Systems, Corp.
MS Shibaura Bldg., 13-23,
Shibaura 4-chome,
Minato-Ku, Tokyo 108-0023, Japan

ENERGYSTAR is a U.S. trademark.
As an ENERGYSTAR® Partner, NEC-Mitsubishi Electronics Display of America, Inc. has determined that this product meets the ENERGYSTAR guidelines for energy efficiency. The ENERGYSTAR emblem does not represent EPA endorsement of any product or service.
IBM PC/XT/AT, PS/2, MCGA, VGA, 8514/A and XGA are registered trademarks of International Business Machines Corporation.
Apple and Macintosh are registered trademarks of Apple Computer Inc.
Microsoft and Windows are registered trademarks of the Microsoft Corporation.
NEC is a registered trademark of NEC Corporation.
All other trademarks or registered trademarks are property of their respective owners.

01b_English 8 2/26/02, 10:06 AM

Contents

Your new NEC MultiSync LCD monitor box* should contain the following:

- MultiSync monitor with tilt base
- Power Cord
- Video Signal Cable (15-pin mini D-SUB male to DVI-A)
- User's Manual

User's Manual

Power Cord

Video Signal Cable
(15-pin mini D-SUB male to DVI-A)

* *Remember to save your original box and packing material to transport or ship the monitor.*

01b_English 9 2/26/02, 10:06 AM

Quick Start

To attach the MultiSync LCD monitor to your system, follow these instructions:

1. Turn off the power to your computer.
2. **For the PC or Mac with DVI digital output:** Connect the DVI-D to DVI-D signal cable to the connector of the display card in your system (**Figure A.1**). Tighten all screws.

   For the PC with Analog output: Connect the 15-pin mini D-SUB to DVI-A signal cable to the connector of the display card in your system (**Figure A.2**).

   For the Mac: Connect the MultiSync Macintosh cable adapter to the computer (**Figure B.1**). Attach the 15-pin mini D-SUB signal cable to the MultiSync Macintosh cable adapter (**Figure B.1**).

NOTE: Some Macintosh systems do not require a Macintosh cable adapter.

3. Remove connector cover. Connect the DVI signal cable to the connector on the back of the monitor. Place the video signal cable (**Figure C.1**).

   Replace connector cover.

NOTE: Incorrect cable connections may result in irregular operation, damage display quality/ components of LCD module and/or shorten the module's life.

4. Remove power cord cover. Connect one end of the power cord to the AC inlet on the back of the monitor and the other end to the power outlet (**Figure D.1**). Replace the power cord cover.

NOTE: Please refer to Caution section of this manual for proper selection of AC power cord

5. Press an arrow point "▼" portion with take off connector cover.
6. Check the Vacation Switch on the right hand side of the monitor is in the ON position. Turn on the monitor with the Power Button (**Figure E.1**) and the computer.

NOTE: There are two switches: one on the right side and one on the front side of the monitor. DO NOT switch on/off quickly.

7. To complete the setup of your MultiSync LCD monitor, use the following OSM controls:
   - Auto Adjust Contrast (Analog input only)
   - Auto Adjust (Analog input only)

Refer to the **Controls** section of this User's Manual for a full description of these OSM controls.

NOTE: If you have any problems, please refer to the **Troubleshooting** section of this User's Manual.

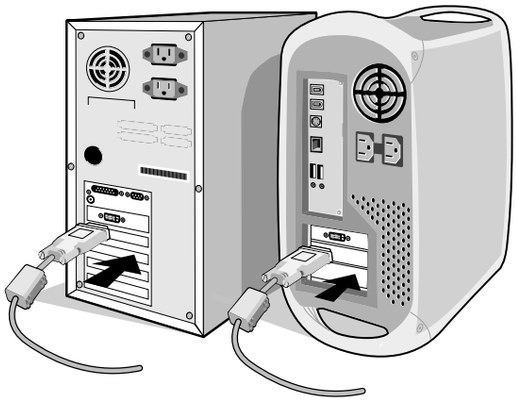

Figure A.1

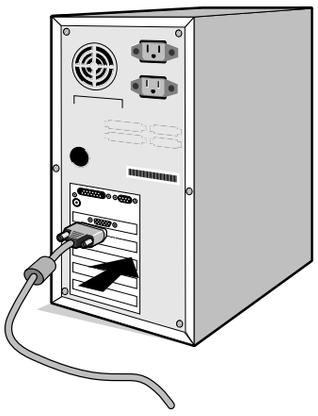

Figure A.2

01b_English 10 2/26/02, 10:06 AM

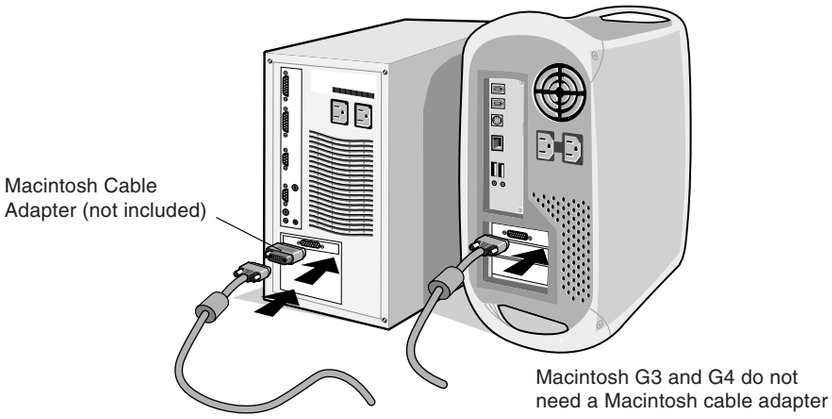

Figure B.1

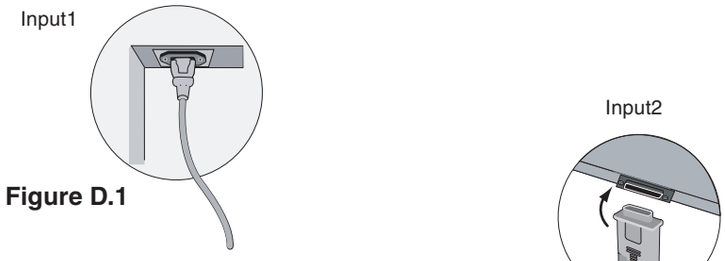

Figure D.1

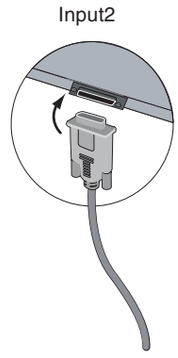

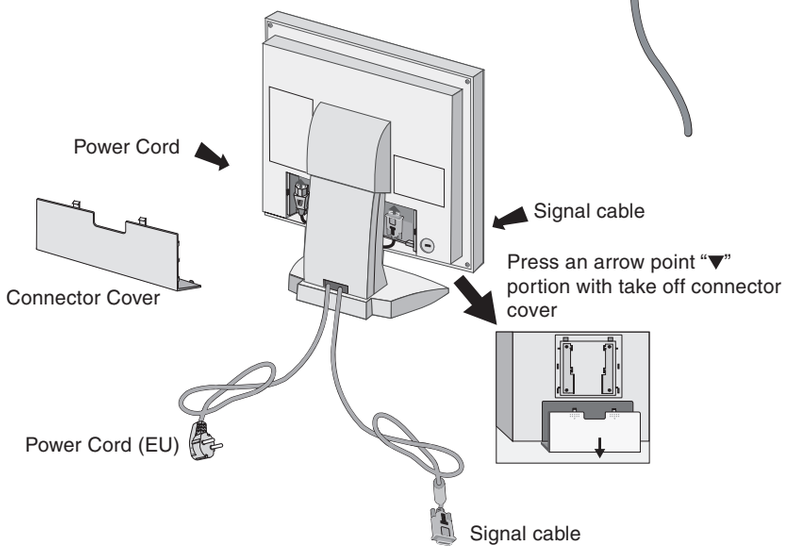

Figure C.1

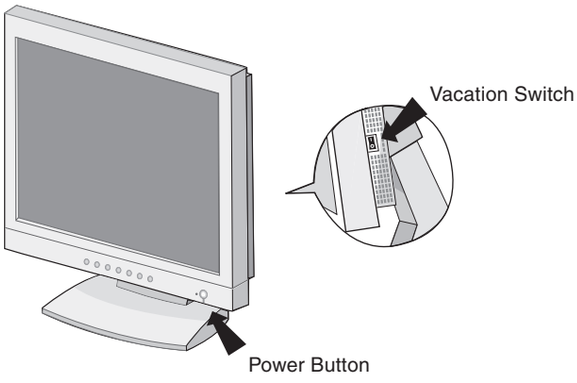

Figure E.1

Tilt

Grasp both sides of the monitor screen with your hands and adjust the tilt as desired. (**Figure F.1**).

The movable scope for elevation and depression of LCD is -5°~30°angle. (**Figure F.2**).

Remove Monitor Stand for Mounting

To prepare the monitor for alternate mounting purposes:

1. Disconnect all cables.
2. Place monitor face down on a non-abrasive surface (Place the screen on a 36 mm platform so that the stand is parallel with the surface.) (**Figure G.1**).
3. To take off back cover, please follow the instructions of arrow while pressing two side of monitor. (**Figure G.2**).

   Next, lift up the stand, dismantle upper cover, then go on to dismantle the stand cover. (**Figure G.3**).

   Return the stand to its original position, remove the 4 screws that connect the monitor to the stand, and lift off the stand assembly. (**Figure G.4**).
4. Reverse this process to reattach stand.

NOTE: Use only VESA-compatible alternative mounting method.

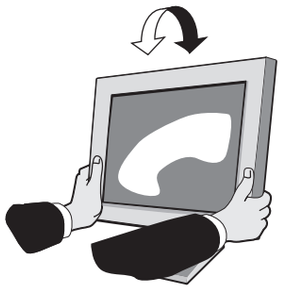

Figure F.1

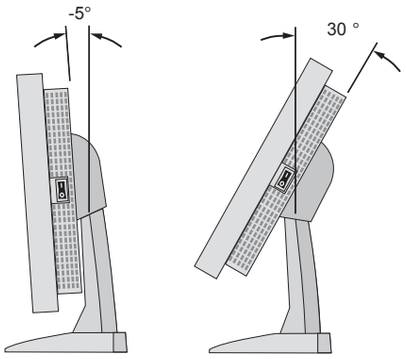

Figure F.2

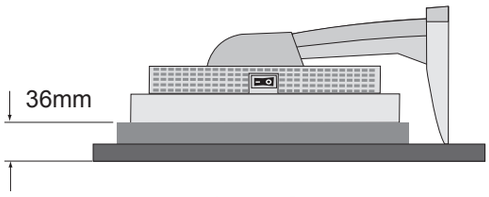

Figure G.1

01b_English 12 2/26/02, 10:06 AM

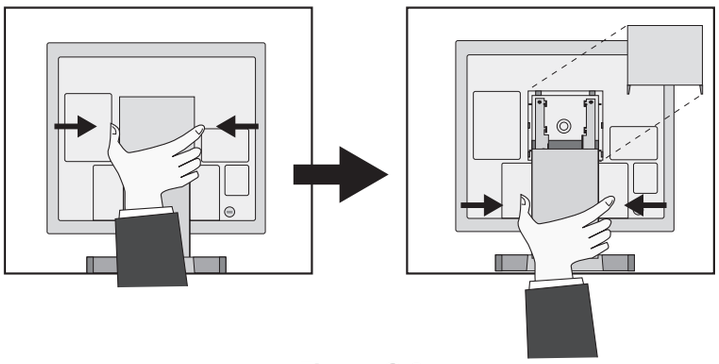

Figure G.2

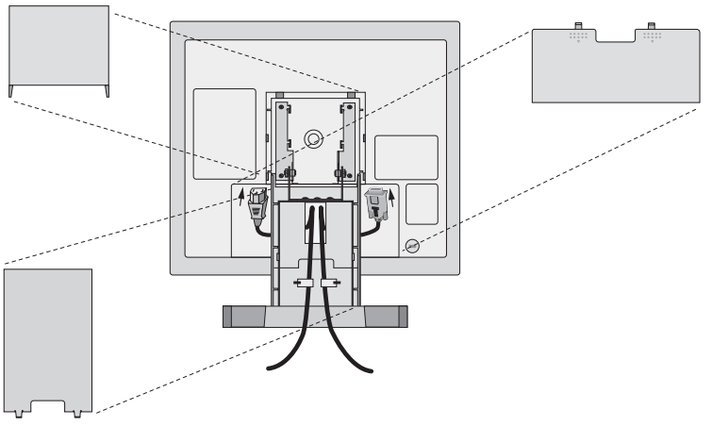

Figure G.3

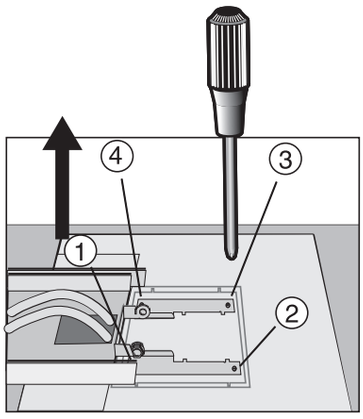

Figure G.4

Caution: Please use the attached screws (4pcs) when mounting. To fulfil the safety requirements the monitor must be mounted to an arm which guaranties the necessary stability under consideration of the weight of the monitor.
The LCD monitor shall only be used with an approved arm (e.g. GS mark).

Controls

OSM (On-Screen-Manager) Controls

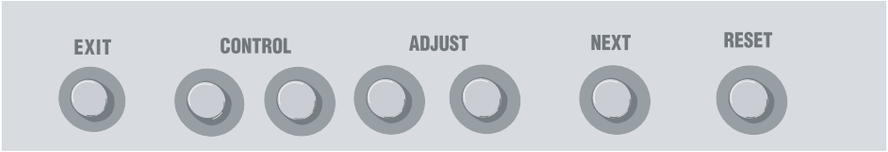

The OSM controls on the front of the monitor function as follows:
To access OSM press any of the control buttons (◀/▶, –, +).
To change DVI/D-SUB signal input, press the NEXT button.

Control	Menu
EXIT	Exits the OSM controls. Exits to the OSM main menu.
CONTROL ◀/▶	Moves the highlighted area left/right to select control menus. Moves the highlighted area up/down to select one of the controls.
ADJUST -/+	Moves the bar left/right to increase or decrease the adjustment. Activates Auto Adjust function. Enter the sub menu.
NEXT	Moves the highlighted area of main menu right to select one of the controls.
RESET	Resets the highlighted control menu to the factory setting. Resets the highlighted control to the factory setting.

NOTE: When RESET is pressed in the main and sub-menu, a warning window will appear allowing you to cancel the RESET function by pressing the EXIT button.

Brightness/Contrast Controls

BRIGHTNESS
Adjusts the overall image and background screen brightness.

CONTRAST
Adjusts the image brightness in relation to the background.

AUTO ADJUST (Analog input only)
Adjusts the image displayed for non-standard video inputs.

Auto Adjust (Analog input only)

Automatically adjusts the Image Position, the H. Size and Fine setting.

Position Controls (Analog input only)

LEFT/RIGHT
Controls Horizontal Image Position within the display area of the LCD.

DOWN/UP
Controls Vertical Image Position within the display area of the LCD.

01b_English 14 2/26/02, 10:06 AM

H. SIZE

Adjusts the horizontal size by increasing or decreasing this setting. Should the "AUTO Adjust function" do not give you a satisfactory picture setting, a further tuning can be performed using the "H.Size" function (dot clock). For this a Moiré test pattern could be used. This function may alter the width of the picture. Use left/Right Menu to center the image on the screen. If the H.Size is wrongly calibrated, the result would look like on the left drawing. The image should be homogeneous.

When H.SIZE value is wrong. When H.SIZE value is improved. When H.SIZE value is correct.

FINE

Improves focus, clarity and image stability by increasing or decreasing this setting. Improves focus, clarity and image stability by increasing or decreasing this setting. Should the "Auto Adjust function" and the "H.Size" function do not give you a satisfactory picture setting, a fine tuning can be performed using the "Fine" function. It improves focus, clearity and image stability by increasing or decreasing this setting. For this a Moiré test pattern could be used. If the Fine value is wrongly calibrated, the result would look like on the left drawing. The image should be homogeneous.

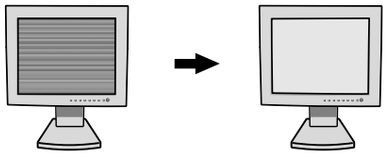

When FINE value is wrong. When FINE value is correct.

Colour Control Systems

Six colour presets select the desired colour setting (sRGB and NATIVE colour presets are standard and cannot be changed). Colour temperature increases or decreases in each preset.

R,Y,G,C,B,M,S

Increases or decreases Red, Yellow, Green, Cyan, Blue, Magenta and Saturation depending upon which is selected. The change in colour will appear on screen and the direction (increase or decrease) will be shown by the colour bars.

sRGB

sRGB mode dramatically improves the colour fidelity in the desktop environment by a single standard RGB colour space. With this colour supported environment, the operator could easily and confidently communicate colours without further colour management overhead in the most common situations.

NATIVE

Original colour presented by the LCD panel that is unadjustable.

Tools 1

SHARPNESS

This function is digitally capable to keep crisp image at any timings. It is continuously adjustable to get distinct image or soft one as you prefer, and set independently by different timings.

EXPANSION MODE

Sets the zoom method.

H-EXPANSION

The horizontal image is expanded to approximately 2 times.

V-EXPANSION

The vertical image is changeable.

DVI SELECTION

This function selects EDID Data for ANALOG signal or DIGITAL signal on the DVI input.

When the DVI-D is connected to DVI, DVI Selection is recommended to be selected to DIGITAL.

When the DVI-A is connected to DVI, DVI Selection is recommended to be selected to ANALOG.

DIGITAL

EDID DATA for DVI DIGITAL input is available.

ANALOG

EDID DATA for DVI ANALOG input is available.

Tools 2

LANGUAGE

OSM control menus are available in seven languages.

OSM POSITION

You can choose where you would like the OSM control image to appear on your screen. Selecting OSM Location allows you to manually adjust the position of the OSM control menu left, right, down or up.

OSM TURN OFF

The OSM control menu will stay on as long as it is use. In the OSM Turn Off submenu, you can select how long the monitor waits after the last touch of a button to shut off the OSM control menu. The preset choices are 10, 20, 30, 45, 60 and 120 seconds.

OSM LOCK OUT

This control completely locks out access to all OSM control functions. When attempting to activate OSM controls while in the Lock Out mode, a screen will appear indicating the OSM controls are locked out. To activate the OSM Lock Out function, press ◀, then ▶ and hold down simultaneously. To de-activate the OSM Lock Out, press ◀, then ▶ and hold down simultaneously.

RESOLUTION NOTIFIER

This optimal resolution is 1024 x 768. If ON is selected, a message will appear on the screen after 30 seconds, notifying you that the resolution is not at 1024 x 768.

01b_English 16 2/26/02, 10:06 AM

FACTORY PRESET

Selecting Factory Preset allows you to reset all OSM control settings back to the factory settings. Individual settings can be reset by highlighting the control to be reset and pressing the RESET button.

Information

DISPLAY MODE

Provides information about the current resolution display and technical data including the preset timing being used and the horizontal and vertical frequencies.
Increases or decreases the current resolution. (Analog input only).

MONITOR INFO

Indicates the model and serial numbers of your monitor.

OSM Warning

OSM Warning menus disappear with Exit button.

NO SIGNAL: This function gives a warning when there is no Horizontal or Vertical Sync Signal present and advises you to check all Video Inputs on the monitor and computer to make sure they are properly connected. After power is turned on or when there is a change of input signal or video is inactive, the **No Signal** window will appear.

RESOLUTION NOTIFIER: This function gives a warning of use with optimized resolution. After power is turned on or when there is a change of input signal or the video signal doesn't have proper resolution, the **Resolution Notifier** window will open. This function can be disabled in the TOOL menu.

OUT OF RANGE: This function gives a recommendation of the optimized resolution and refresh rate. After the power is turned on or there is a change of input signal or the video signal doesn't have proper timing, the **Out Of Range** menu will appear.

NOTE: If "❶ CHANGE DVI SELECTION" is displayed, switch to DVI SELECTION.

01b_English 17 2/26/02, 10:06 AM

Recommended Use

Safety Precautions and Maintenance

FOR OPTIMUM PERFORMANCE, PLEASE NOTE THE FOLLOWING WHEN SETTING UP AND USING THE MULTISYNC LCD COLOUR MONITOR:

- **DO NOT OPEN THE MONITOR.** There are no user serviceable parts inside and opening or removing covers may expose you to dangerous shock hazards or other risks. Refer all servicing to qualified service personnel.
- Do not spill any liquids into the cabinet or use your monitor near water.
- Do not insert objects of any kind into the cabinet slots, as they may touch dangerous voltage points, which can be harmful or fatal or may cause electric shock, fire or equipment failure.
- Do not place any heavy objects on the power cord. Damage to the cord may cause shock or fire.
- Do not place this product on a sloping or unstable cart, stand or table, as the monitor may fall, causing serious damage to the monitor.
- Do not place any objects onto the monitor and do not use the monitor outdoors.
- The inside of the flourescent tube located within the LCD monitor contains mercury. Please follow the bylaws or rules of your municipality to dispose of the tube properly.

Immediately unplug your monitor from the wall outlet and refer servicing to qualified service personnel under the following conditions:

- When the power supply cord or plug is damaged.
- If liquid has been spilled, or objects have fallen into the monitor.
- If the monitor has been exposed to rain or water.
- If the monitor has been dropped or the cabinet damaged.
- If the monitor does not operate normally by following operating instructions.
- Do not bend power cord.
- Do not use monitor in high temperatured, humid, dusty, or oily areas.
- Do not cover vent on monitor.
- If monitor is broken, do not come in contact with the liquid crystal.
- If glass is broken. Handle with care.

CAUTION

- Allow adequate ventilation around the monitor so that heat can properly dissipate. Do not block ventilated openings or place the monitor near a radiator or other heat sources. Do not put anything on top of monitor.
- The power cable connector is the primary means of detaching the system from the power supply. The monitor should be installed close to a power outlet which is easily accessible.
- Handle with care when transporting. Save packaging for transporting.

01b_English 18 2/26/02, 10:06 AM

CORRECT PLACEMENT AND ADJUSTMENT OF THE MONITOR CAN REDUCE EYE, SHOULDER AND NECK FATIGUE. CHECK THE FOLLOWING WHEN YOU POSITION THE MONITOR:

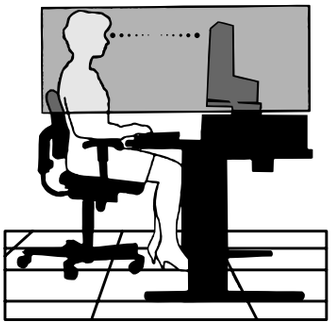

- For optimum performance, allow 20 minutes for warm-up.
- Adjust the monitor height so that the top of the screen is at or slightly below eye level. Your eyes should look slightly downward when viewing the middle of the screen.
- Position your monitor no closer than 40 cm and no further away than 70 cm from your eyes. The optimal distance is 58 cm.
- Rest your eyes periodically by focusing on an object at least 6 m away. Blink often.
- Position the monitor at a 90° angle to windows and other light sources to minimize glare and reflections. Adjust the monitor tilt so that ceiling lights do not reflect on your screen.
- If reflected light makes it hard for you to see your screen, use an antiglare filter.
- Clean the LCD monitor surface with a lint-free, non-abrasive cloth. Avoid using any cleaning solution or glass cleaner!
- Adjust the monitor's brightness and contrast controls to enhance readability.
- Use a document holder placed close to the screen.
- Position whatever you are looking at most of the time (the screen or reference material) directly in front of you to minimize turning your head while you are typing.
- Avoid displaying fixed patterns on the monitor for long periods of time to avoid image persistence (after-image effects).
- Get regular eye checkups.

Ergonomics

To realize the maximum ergonomics benefits, we recommend the following:

- Use the preset Size and Position controls with standard signals.
- Use the preset Colour Setting.
- Use non-interlaced signals with a vertical refresh rate between 60-75 Hz.
- Do not use primary colour blue on a dark background, as it is difficult to see and may produce eye fatigue to insufficient contrast.

01b_English 19 2/26/02, 10:06 AM

Specifications

Monitor Specifications (NL1502)		MultiSync Monitor	Notes
LCD Module	Diagonal: Viewable Image Size: Native Resolution (Pixel Count):	38 cm/15 inches 38 cm/15 inches 1024 x 768	Active matrix; thin film transistor (TFT) liquid crystal display (LCD); 0.297 mm dot pitch; 300cd/m^2 white luminence, typical; 450:1 contrast ratio, typical
Input Signal	Video: Sync:	DVI-I (TMDS) Separate sync.TTL Level Horizontal sync. Positive/Negative Vertical sync. Positive/Negative Compostite sync. Positive/Negative	
Display Colours	Analog input:	16,777,216	Depends on display card used.
Synchronization Range	Horizontal: Vertical:	30 kHz to 60 kHz 50 Hz to 75 Hz	Automatically Automatically
DVI Digital Input		TMDS, 80 MHz max., Single Link	
Viewing Angle	Left/Right: Up/Down:	± 75° -60° to + 50°	
Image Formation Time		25ms (Typ.) tr=6 ms,tf=19 ms	
Resolutions Supported	Landscape:	640 x 480 at 60 Hz to 75 Hz*1 720 x 400 at 70 Hz*1 800 x 600 at 56 Hz to 75 Hz*1 832 x 624 at 75 Hz*1 1024 x 768 at 60 Hz to 75 Hz*2	Some systems may not support all modes listed.
Active Display Area (Lanscape)	Horizontal: Vertical:	304 mm/12.0 inches 228 mm/9.0 inches	Dependent upon signal timing used, and does not include border area.
Power Supply		AC 100-240 V, 50-60 Hz	
Current Rating		1 A @ 100-240 V	
Dimensions	Landscape:	350.5 mm (W) x 362.1 mm (H) x 160.7 mm (D) 13.8 inches (W) x 14.3 inches (H) x 6.3 inches (D)	
Weight		4.8 kg (10.6 lbs)	
Environmental Considerations			
	Operating Temperature: Humidity: Altitude: Storage Temperature: Humidity: Altitude:	5 °C to 35 °C 30% to 80% 0 to 3,050 m -20 °C to +60 °C 10% to 85% 0 to 14,000 m	

*1 Interpolated Resolutions: When resolutions are shown that are lower than the pixel count of the LCD module, text may appear different. This is normal and necessary for all current flat panel technologies when displaying non-native resolutions full screen. In flat panel technologies, each dot on the screen is actually one pixel, so to expand resolutions to full screen, an interpolation of the resolution must be done.
*2 NEC-Mitsubishi Electronics Display cites recommended resolutions at 75 Hz for optimal display performance.

NOTE: Technical specifications are subject to change without notice.

01b_English 20 2/26/02, 10:06 AM

Features

sRGB Colour Control: A new optimized colour management standard which allows for colour matching on computer displays and other peripherals. The sRGB, which is based on the calibrated colour space, allows for optimal colour representation and backward compatibility with other common colour standards.

Reduced Footprint: Provides the ideal solution for environments requiring superior image quality but with size and weight limitations. The monitor's small footprint and low weight allow it to be moved or transported easily from one location to another.

Colour Control System: Allows you to adjust the colours on your screen and customize the colour accuracy of your monitor to a variety of standards.

OSM (On-Screen Manager) Controls: Allow you to quickly and easily adjust all elements of your screen image via simple to use on-screen menus.

ErgoDesign Features: Enhance human ergonomics to improve the working environment, protect the health of the user and save money. Examples include OSM controls for quick and easy image adjustments, tilt base for preferred angle of vision, small footprint and compliance with MPRII and TCO guidelines for lower emissions.

Plug and Play: The Microsoft solution with the Windows 95/98/2000 operating system facilitates setup and installation by allowing the monitor to send its capabilities (such as screen size and resolutions supported) directly to your computer, automatically optimizing display performance.

IPM (Intelligent Power Manager) System: Provides innovative power-saving methods that allow the monitor to shift to a lower power consumption level when on but not in use, saving two-thirds of your monitor energy costs, reducing emissions and lowering the air conditioning costs of the workplace.

Multiple Frequency Technology: Automatically adjusts monitor to the display card's scanning frequency, thus displaying the resolution required.

FullScan Capability: Allows you to use the entire screen area in most resolutions, significantly expanding image size.

Wide Viewing Angle Technology: Allows the user to be able to see the monitor from any angle (±75° degrees) from any orientation – Portrait or Landscape. Provides full ±75° viewing angles either up, down, left or right.

VESA Standard Mounting Interface: Allows users to connect their MultiSync monitor to any VESA standard (75 mm pitch) third party mounting arm or bracket. Allows for the monitor to be mounted on a wall or an arm using any third party compliant device.

DVI-I: The intergrated interface ratified by the Digital Display Working Group (DDWG) that allows both digital and analog connectors through one port. The "I" stands for intergration for both digital and analog. The digital portion is TMDS based.

DVI-D: The digital only subset of DVI ratified by the Digital Display Working Group (DDWG) for digital connections between computers and displays. As a digital only connector, analog support is not provided for through a DVI-D connector. As a TMDS based digital only connection, only a simple adapter is necessary for compatibility between DVI-D and other TMDS based digital connectors such as DFP and P&D.

DVI-A: The analog only subset of DVI ratified by the Digital Display Working Group (DDWG) for analog connections between computers and displays. As an analog only connector, digital support is not provided for through a DVI-A and/or a D-Sub 15pin connector.

P&D: Plug and Display - The VESA standard for digital flat panel monitor interfaces. It is more robust than DFP since it allows for other options through a single connector (options like USB, analog video and IEEE-1394-995). The VESA committee has recognized that DFP is a subset of P&D. As a TMDS based connector (for the digital input pins), only a simple adapter is necessary for compatibility between P&D and other TMDS based digital connectors such as DVI and DFP.

01b_English 21 2/26/02, 10:06 AM

Troubleshooting

No picture

- The signal cable should be completely connected to the display card/computer.
- The display card should be completely seated in its slot.
- Check the Vacation Switch should be in the ON Position. Front power Switch and computer power switch should be in the ON position.
- Check to make sure that a supported mode has been selected on the display card or system being used. (Please consult display card or system manual to change graphics mode.)
- Check the monitor and your display card with respect to compatibility and recommended settings.
- Check the signal cable connector for bent or pushed-in pins.
- Check the signal input.

Power Button does not respond

- Unplug the power cord of the monitor from the AC outlet to turn off and reset the monitor.
- Check the Vacation Switch on the right hand side of the monitor.

Image persistence

- Image persistence is when a “ghost” of an image remains on the screen even after the monitor has been turned off. Unlike CRT monitors, LCD monitors’ image persistence is not permanent. To alleviate image persistence, turn the monitor off for as long as an image was displayed. If an image was on the monitor for one hour and a “ghost” of that image remains, the monitor should be turned off for one hour to erase the image.

NOTE: As with all personal display devices, NEC-Mitsubishi Electronic Displays recommends using a screen saver at regular intervals whenever the screen is idle.

Image is unstable, unfocused or swimming is apparent

- Signal cable should be completely attached to the computer.
- Use the OSM Image Adjust controls to focus and adjust display by increasing or decreasing the fine total. When the display mode is changed, the OSM Image Adjust settings may need to be readjusted.
- Check the monitor and your display card with respect to compatibility and recommended signal timings.
- If your text is garbled, change the video mode to non-interlace and use 75 Hz refresh rate.

Message “OUT OF RANGE” is displayed (screen is either blank or shows rough images only)

- Image is displayed only roughly (pixels are missing) and OSM warning “OUT OF RANGE” is displayed: Either signal clock or resolution is too high. Choose one of the supported modes.
- OSM warning “OUT OF RANGE” is displayed on a blank screen: Signal frequency is out of range. Choose one of the supported modes.

LED on monitor is not lit (no green or amber colour can be seen)

- Power Switch should be in the ON position and power cord should be connected.

01b_English 22 2/26/02, 10:06 AM

Display image is not sized properly

- Use the OSM Image Adjust controls to increase or decrease the Coarse total.
- Check to make sure that a supported mode has been selected on the display card or system being used. (Please consult display card or system manual to change graphics mode.)

No Video

- If no video is present on the screen, turn the Power button off and on again.
- Make certain the computer is not in a power-saving mode (touch the keyboard or mouse).

01b_English 23 2/26/02, 10:06 AM