上海增信电子有限公司
Signal Plus Technology Co., Ltd.

规 格 承 认 书
SPECIFICATION FOR APPROVAL

日期
DATE: 2023.04.04

版本
REV.: B

客　　户
CUSTOMER:

客 户 料 号
CUSTOMER P/N:

品　　名
PART NAME: Internal PCB antenna 2.4G&5GHz 3dBi 1.37 white Low Loss Cable L=50mm With RF CONN

供 方 料 号
SUPPLIER P/N: 6289F00002

送样日期Date:　　送样数量Q'TY:　　Pcs

客户确认CUSTOMER APPROVED BY		
核准 Approvaled by	审核 Checked by	确认 Confirmed by

供方确认SUPPLIER SIGNATURE		
核准 Approvaled by	审核 Checked by	拟制 Prepared by
Andy		Cindy

ZX-QT-RD-0011-A1

Add:上海市徐汇区桂箐路69号30栋603室　Tel:021-54266190　Fax:021-54266191

Revision History

Revision	Note	Date
A	New Issue	2023.03.15
B	Customer requirements on the length of the cable.	2023.04.04

Antenna Solution

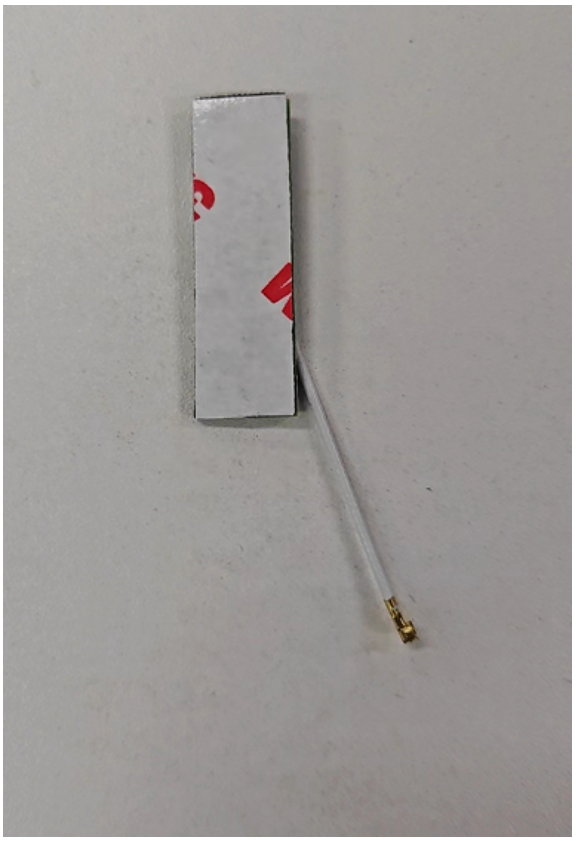

Data Preview

2.4&5G-1:

Freq.(MHz)	2400	2450	2500	5150	5350	5450	5550	5750	5850
VSWR	1.64	1.5	1.43	1.66	1.6	1.61	1.39	1.21	1.14
Gain(dBi)	3.03	3.12	3.04	3.03	3.01	3.04	3.11	3.12	2.98
Eff.%	85.60%	87.70%	85.90%	85.20%	85.10%	85.00%	85.10%	86.30%	85.90%

S21-Ant1,Ant2

Freq.(MHz)	2400	2450	2500	5150	5350	5450	5550	5750	5850
Isolation(dB)	-26.6	-24.6	-27.3	-36.7	-39.1	-49.6	-54.2	-57.4	-50.1

S11(2.4G&5G-Ant1)

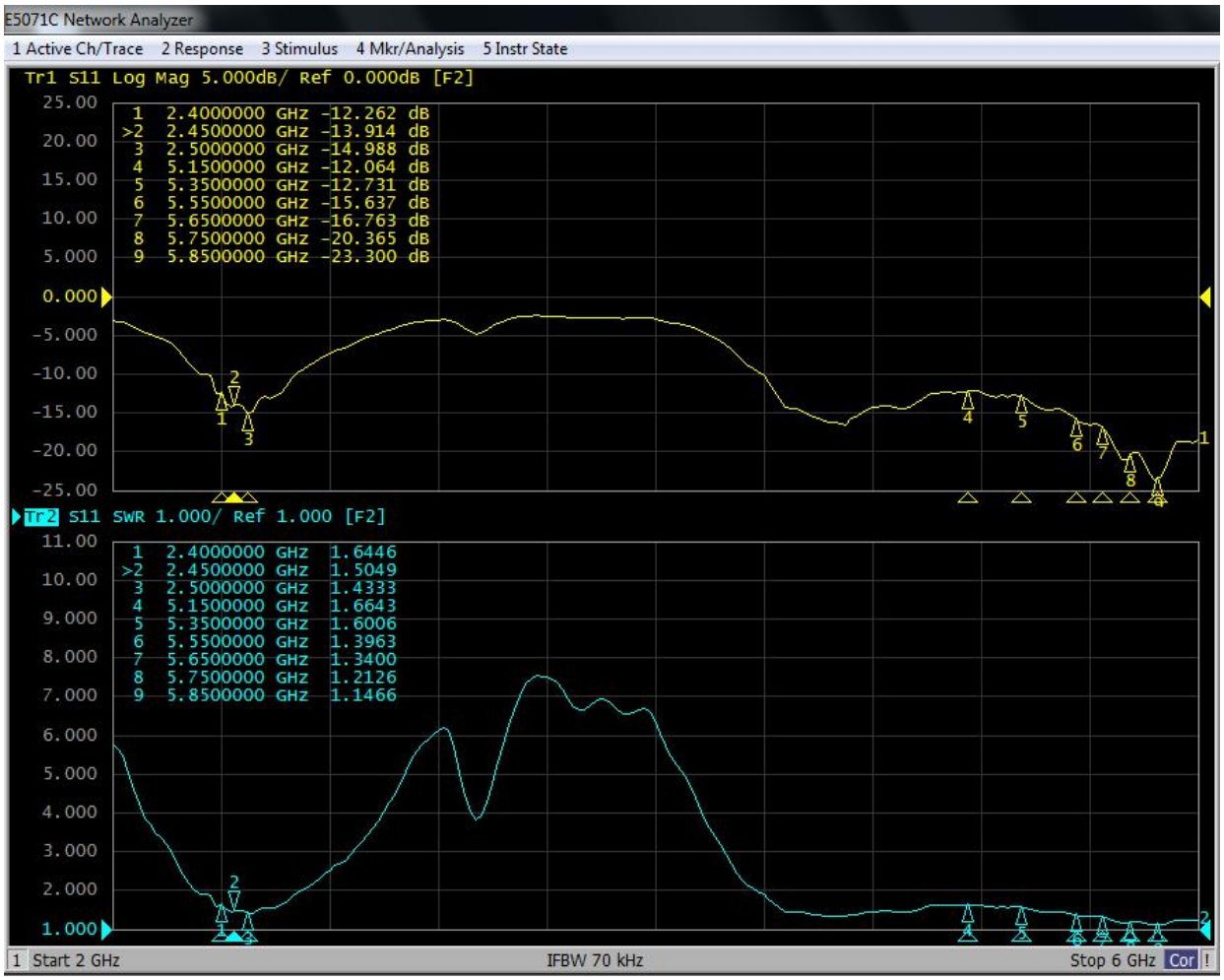

Radiation patterns:3D

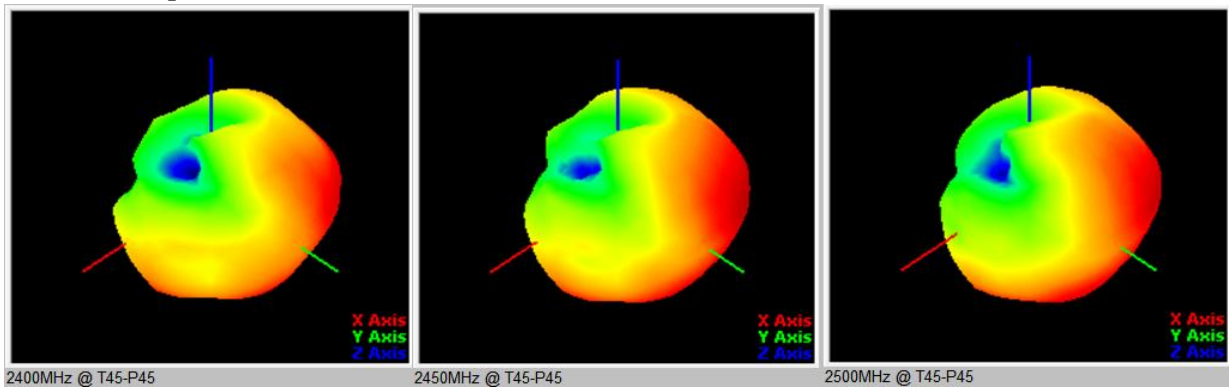

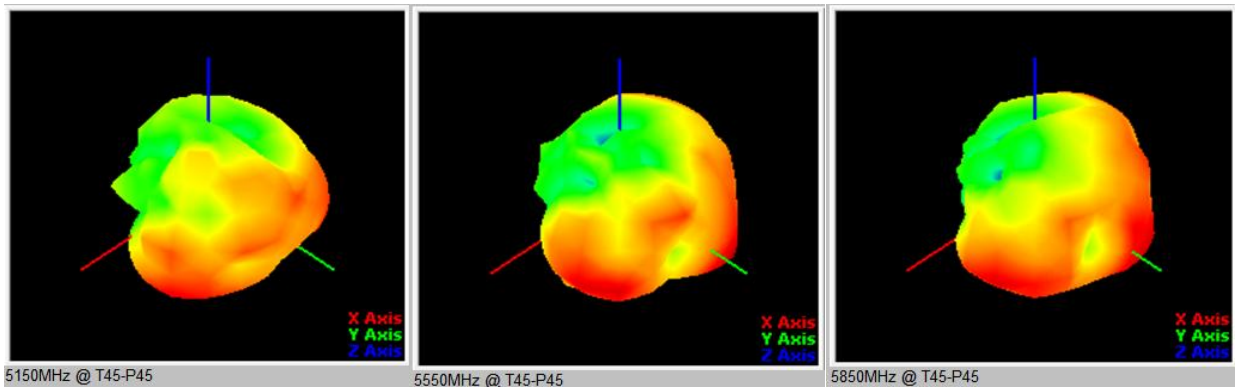

Radiation patterns:2D :2450MHz

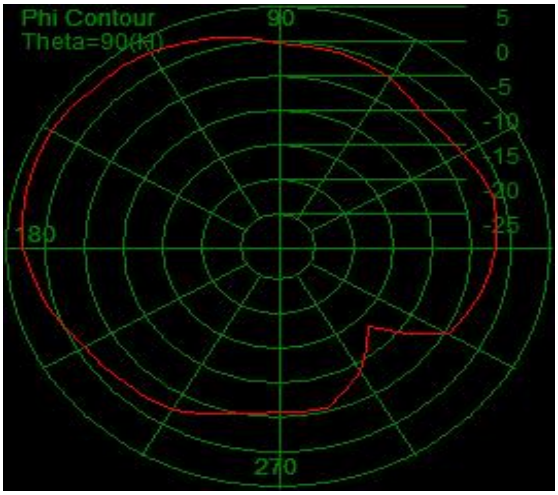

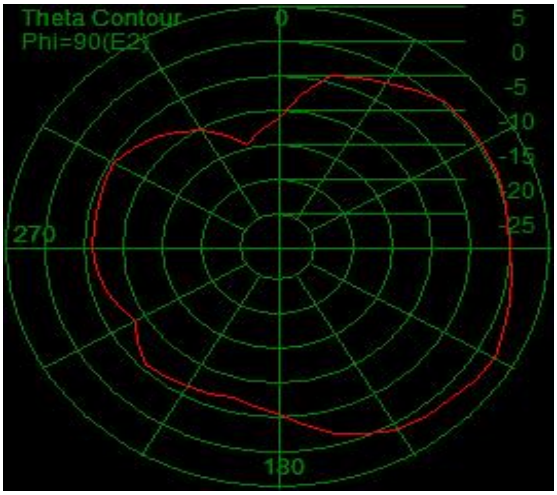

Radiation patterns:2D :5150MHz

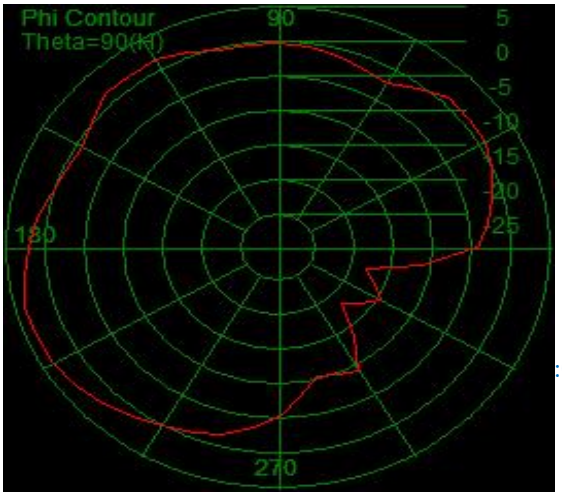

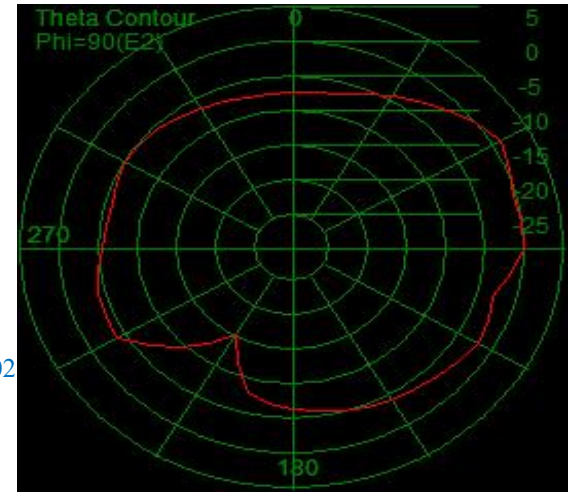

Radiation patterns:2D :5550MHz

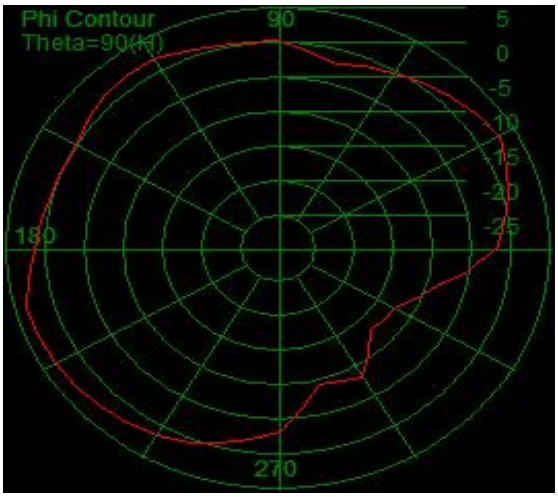

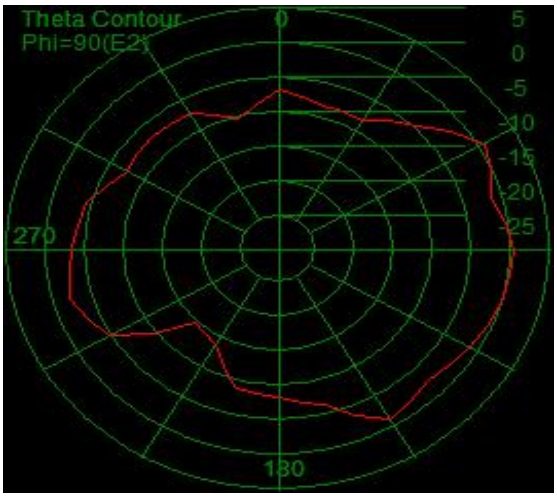

Radiation patterns:2D :5850MHz

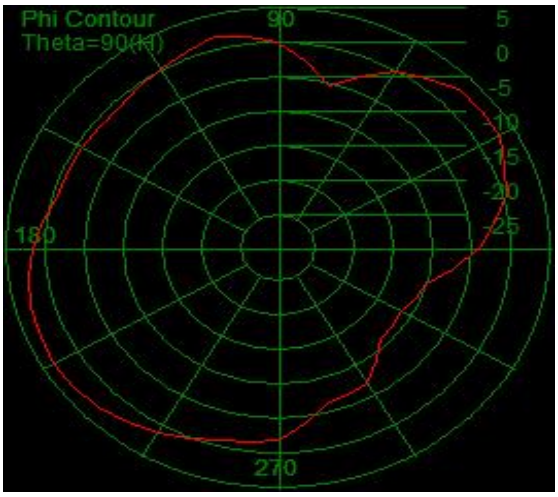

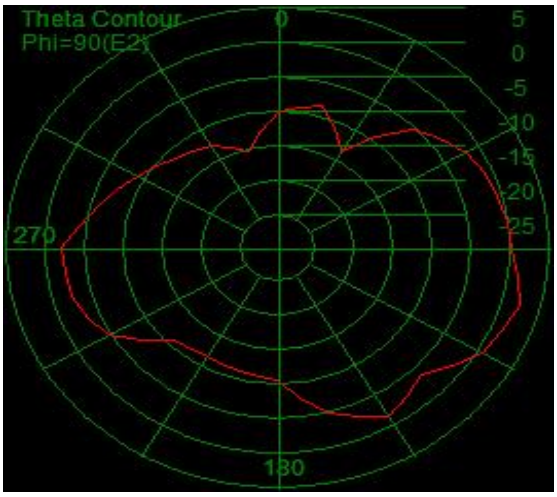

S21-1,2

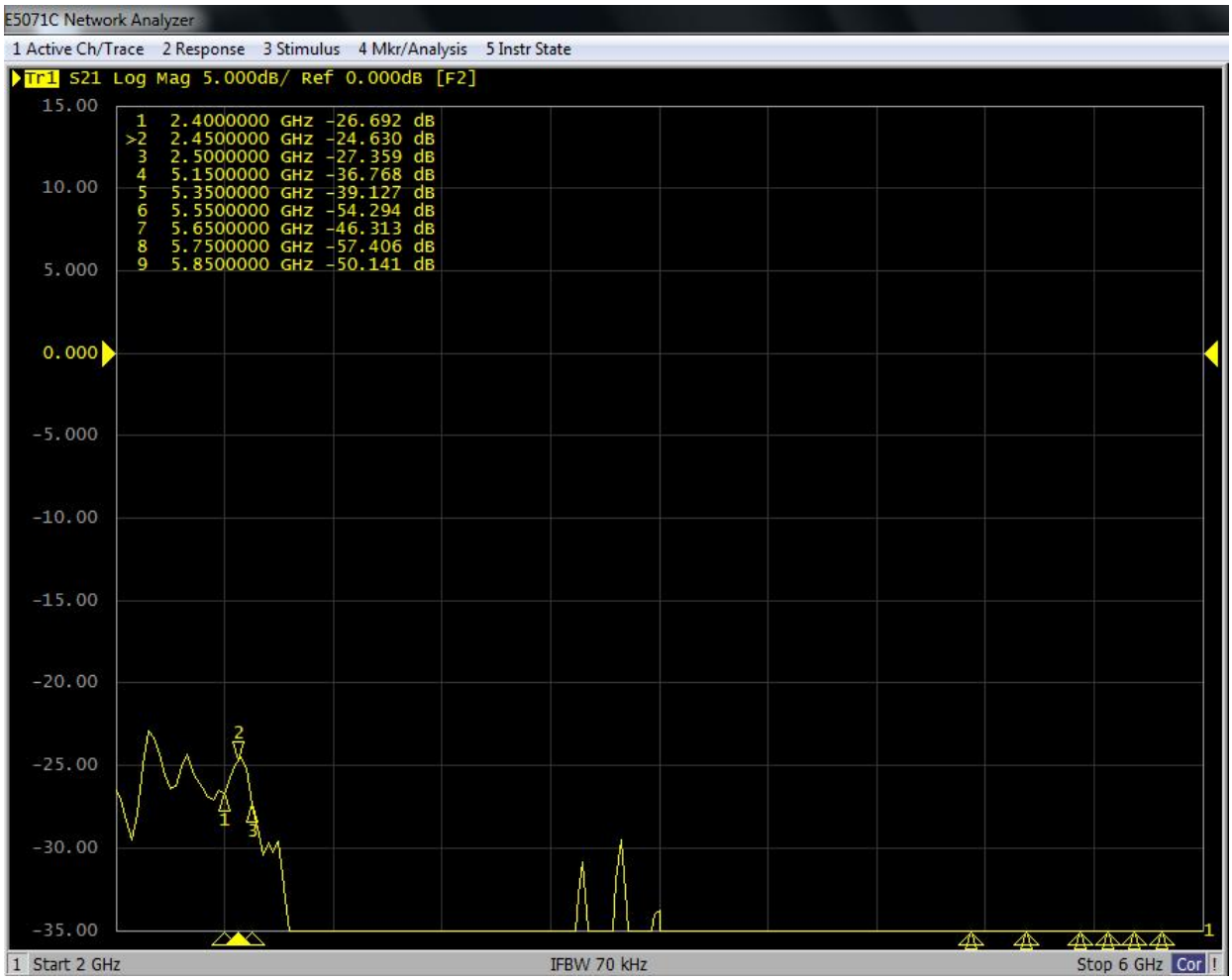
E5071C Network Analyzer
1 Active Ch/Trace 2 Response 3 Stimulus 4 Mkr/Analysis 5 Instr State
Tr1 S21 Log Mag 5.000dB/ Ref 0.000dB [F2]
1 2.4000000 GHz -26.692 dB
>2 2.4500000 GHz -24.630 dB
3 2.5000000 GHz -27.359 dB
4 5.1500000 GHz -36.768 dB
5 5.3500000 GHz -39.127 dB
6 5.5500000 GHz -54.294 dB
7 5.6500000 GHz -46.313 dB
8 5.7500000 GHz -57.406 dB
9 5.8500000 GHz -50.141 dB
15.00
10.00
5.000
0.000
-5.000
-10.00
-15.00
-20.00
-25.00
-30.00
-35.00
1 Start 2 GHz
IFBW 70 kHz
Stop 6 GHz
Cor

REV	DATE	DESCRIPTION
X1	07/01-2022	New Issue
X2	08/16-2022	Update the cable length
X3	03/15-2023	Update the PCB
X4	04/04-2023	Update the cable length

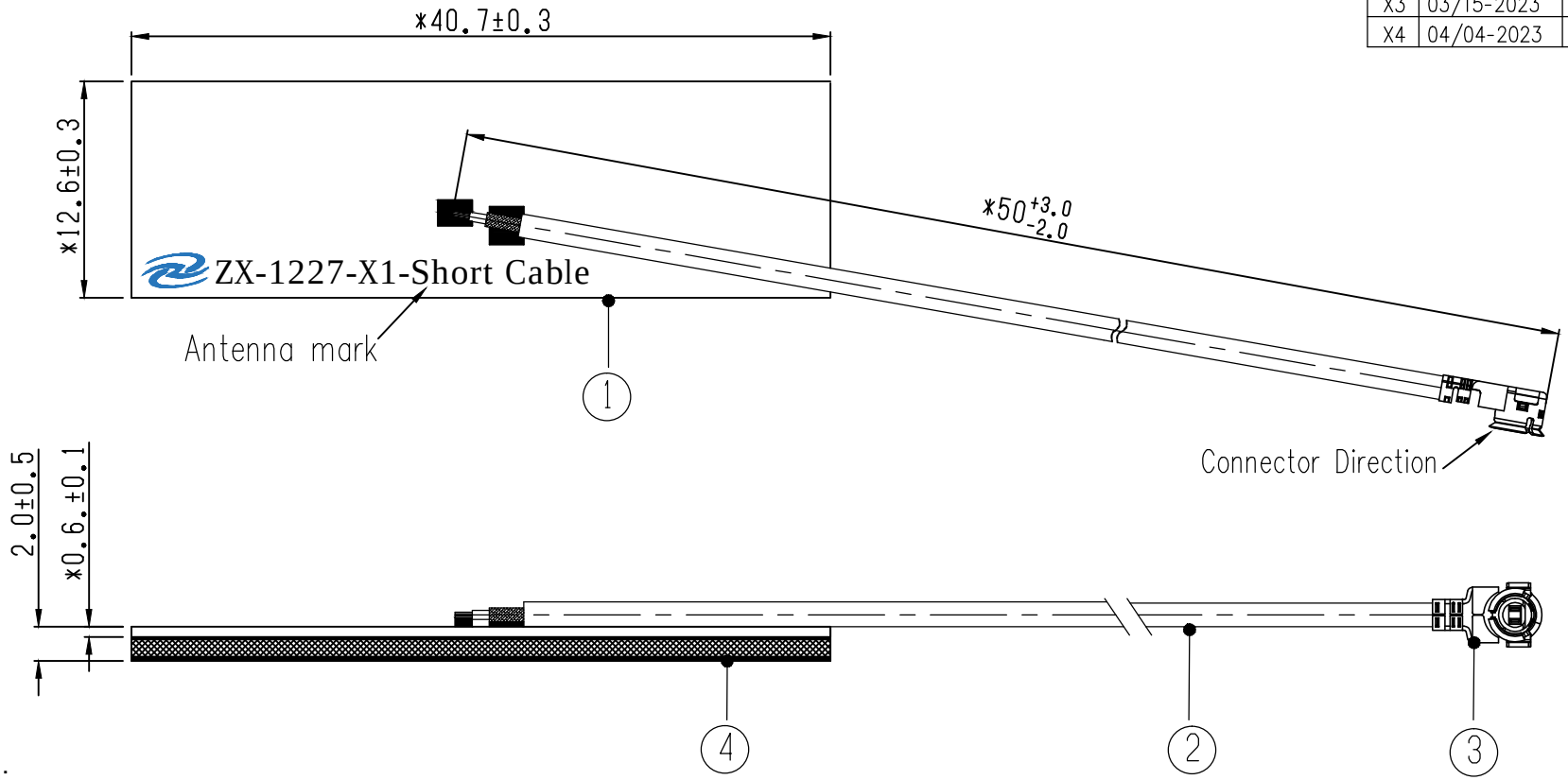

Specification:

Frequency Range:2.4-2.5GHz&5.15~5.85GHz
Impendance:50 Ohm
VSWR:2.0 MAX(with housing)
Gain:3.0dBi

Notes:

1.These Products are in conformity with ROHS 2.0
2.Dimensions with"*" are Important,and() for referance.

NO	DESCRIPTION		Q'TY	REMARK
4	Adhesive Sponge	EVA,T=1mm&3M 9888T(Double faced)	1	
3	Connector	IPEX-1 compatible,Gold Plated	1	
2	Cable	ø1.37mm Cable,Low Loss,White,50Ω	1	
1	PCB	FR4;Green oil on surface	1	501-1-1227-X1

CUSTOMER'S SINGATURE

XX.	±3.0	APPROVED	
XX.	±1.0		
X.	±0.5	CHECKED	
.X	±0.3		
.XX	±0.2	DRAWING	

CUSTOMER:
PART NO:
PART NAME: Antenna 2.4&5GHz
Z&X P/NO: 6289F00002

REV	UNIT	FILE:
X4	mm	SHEET: 1/1

上海增信电子有限公司
Signal Plus Technology Co.,Ltd.

Step 1: Checking

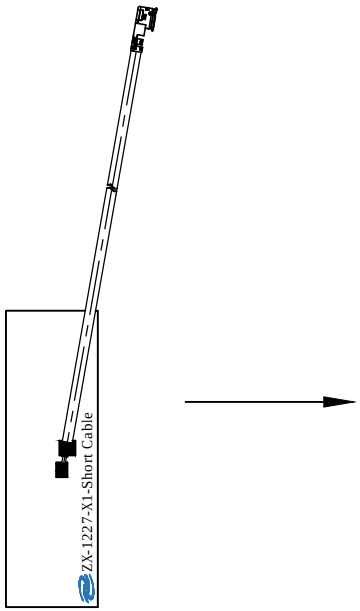

1) Product checked

Step 2: PE-Bag Packaging

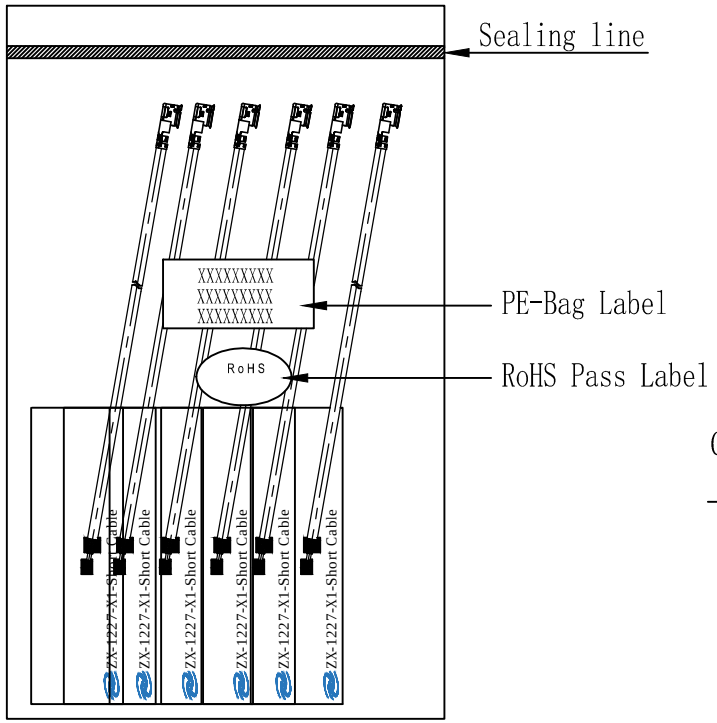

2) 50PCS/PE-Bag

Step 3: Packing

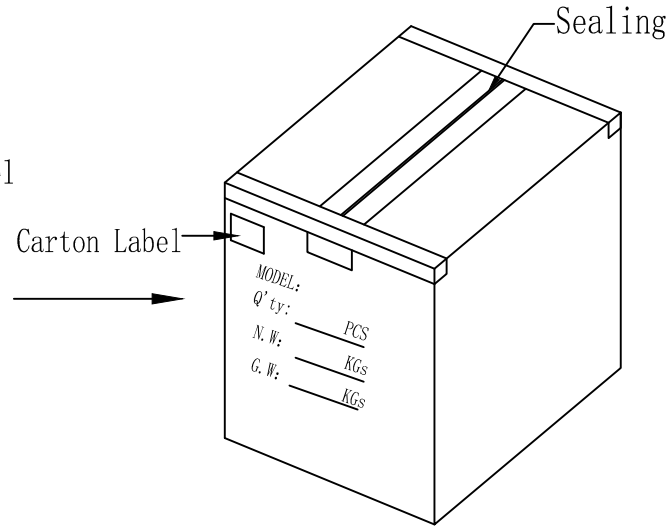

3) Packing, 1000pcs/carton

	XX.	±3.0	APPROVED	CUSTOMER:		
	XX.	±1.0		PART NO:		
	X.	±0.5	CHECKED	PART NAME:	Packaging Specification	
CUSTOMER'S SINGATURE	.X	±0.3		Z&X P/NO:	6289F00002	
	.XX	±0.2	DRAWING	REV	UNIT	FILE:
				X1	mm	SHEET: 1/1

上海增信电子有限公司
Signal Plus Technology Co.,Ltd.