HENA

TABLET PC

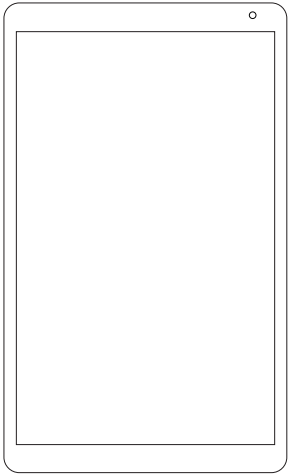

NID-1070

User Manual

Features

Browse the Web.
Visit your favorite websites

Check your e-mail
Keep in touch with friends and family

Watch YouTube™ videos
Browse the world's most popular
video-sharing community

Read your favorite books
Download thousands of books .

Discover thousands of apps for Android™
Games, applications, and more with
play store(need for customer installed).

Connect to the Internet wirelessly
High-speed Wi-Fi 802.11 b/g/n networking

Enjoy in the comfort of your living room

Enjoy your media library anywhere
Portable powerhouse plays popular music,
video,and photo formats
microSD memory card reader
Increase your storage capacity (up to 64 GB
supported)

Built-in camera
Convenient front-facing camera 0.3MP,
Rear camera 2MP

Automatic orientation detection
Read any way you want; the display adjusts
automatically!

Unit at a Glance

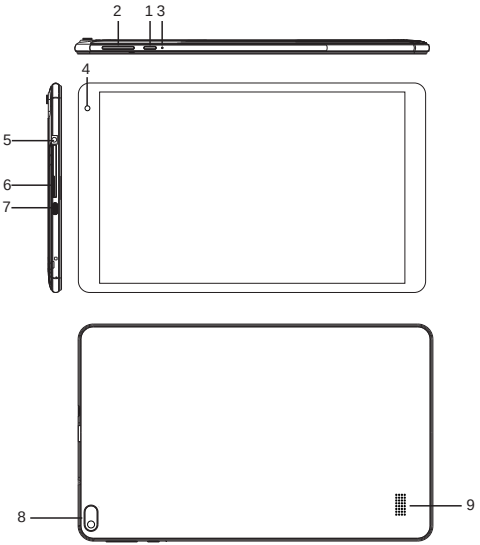

1. Power
2. VOL+/VOL-
3. Reset
4. Front camera
5. Headphone
6. MicroSD card
7. Type-C
8. Rear camera
9. Speaker

Getting Started

Turning the Tablet on or off

To turn the tablet on:
Press and hold the Power key until the LCD screen turns on. Wait until the Home screen appears; the tablet is now ready for use.

To turn the tablet off:
1.Press and hold the Power key until the Device Options menu appears.

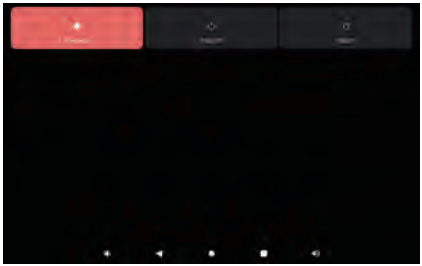

2. Touch ok the screen to turn off the tablet.

Turning the Screen On or off (Standby)

When the tablet is on, you can turn off the screen to conserve battery power. Simply press the Power key once to turn the screen off. Press the Power key again to turn the screen back on.

> ⓘ To conserve battery power, the screen can be set to turn off automatically when the tablet is not in use (between 1 minute and 30 minutes).
> This Screen timeout option can be found in the Display menu.

Getting Started

Unlocking the Screen

When the screen turns off, you will have to unlock the screen
when you turn it back on.
To unlock the screen, swipe up the lock icon.

About Applications

To open an application, touch the application icon on the home screen or in the Launcher where you can tap the icon right up on the home screen to get in..

Launcher screen:

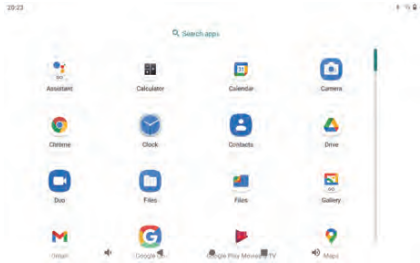

The screen shown above is for illustrative purposes only. We reserve the right to modify and improve the final list of applications available on the tablet.

About Applications

Pre-installed Applications

Some applications have been installed on your tablet for your convenience.
These applications include:

Browse the web.

Perform simple mathematical operations.

Take pictures or videos with the camera.

Check your e-mail.

Play music.

Access the Settings menu to adjust the tablet's options.

Preinstalled Applications

Installing Applications

You can also download an install additional applications from the device's applications marketplace, the web browser, or other sources.

The tablet must be set to allow installation of applications from non-Market sources. The Unknown sources option can be set in the Application settings menu.

Connect to a Wi-Fi network

The Notification bar displays icons that indicate your tablet's Wi-Fi status.

Notification that an open Wi-Fi network is in range.

Connected to a Wi-Fi network (waves indicate connection strength).

[no icon] There are no Wi-Fi networks in range, or the Wi-Fi radio is off.
1. Turn on the Wi-Fi radio if it is not already on. To turn on Wi-Fi:
a.Go to the Home screen: Press the Home key.
b.Open the Settings menu: tap the icon right up on the home screen to get into the launcher, then touch Settings icon.
c.Open the Wireless & networks menu: Slide the icon to ON status.

When Wi-Fi is on, the tablet will look for and display a list of available Wi-Fi networks.

If a network that you have connected to previously is found, the tablet will connect to it.If you don't see your network in the list, you can force the tablet to re-scan. To scan for networks, tap the Menu key, and then touch Scan.

Connect to a Wi-Fi network

2. Select an available Wi-Fi network to connect to:
In the same Wi-Fi settings menu above,touch a network in the list.

If the network is open,the tablet will prompt you to confirm connection to the network. Touch Connect to confirm.

If the network is secured (as indicated by a Lock icon),the tablet will prompt you to enter a password or other credentials.Touch the Wireless password box to show the on-screen keyboard and then use it to enter the password. Touch Connect to confirm.

When you have successfully connected to a Wi-Fi network, the Notifications bar at the upper right of the screen will show a Wi-Fi signal indicator.

> ⓘ To learn about how to add a Wi-Fi network when it is not in range or when the router is set to obscure the network name (SSID); or to configure advanced Wi-Fi options, please refer to the manual.

Connect to a Bluetooth device.

1)Turn on Bluetooth.
   Go to Settings > Bluetooth.
2)Tap the device in the Devices list, then follow the onscreen instructions to connect to it.
   The tablet must be within about 30 feet (10 meters) of the Bluetooth device

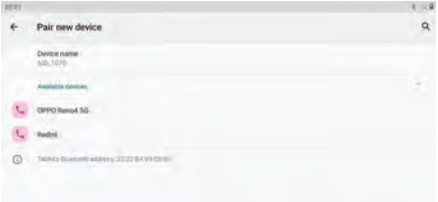

Optional Connections

Connecting to a Computer

Connect the tablet to a computer to transfer files.

1.Connect your tablet to the computer.
With the included USB cable: Plug the small end of the cable into the USB 2.0 high speed connector of the tablet. Plug the large end of the cable into an available USB 2.0 high speed port on the computer.

2.When your tablet is connected, slide down the USB icon then touch icon USB connected.

3.Mount the storage.
Touch button Transfer files(MTP) to mount the tablet's built-in storage. When it is mounted, you can copy files to or from your tablet.

Specifications

Processor	RK3566
RAM	2GB DDR3
Storage	32GB flash built-in; microSD card slot (max.64GB supported)
Display	10.1" IPS LCD (800X1280), Capacitive touch screen
Wi-Fi Networking	IEEE 802.11 b/g/n
Bluetooth	BT4.2
Audio Output	3.5mm headphone
PC Interface	USB 2.0 high speed
Additional Features	Built-in microphone Front facing camera(0.3MP) , Rear camera (2MP) 1x1W speaker
Operating System	Android 11 (Go edition)
Power	Rechargeable Li-poly battery 3.7V 5000MAh
Playback Time (hours)	Up to 6 hours music, 4 hours video, 3 hours web browsing

Google, Android, Google Play and other marks are trademarks of Google LLC

This device complies with part 15 of the FCC rules. Operation is subject to the following two conditions: (1) This device may not cause harmful interference, and (2) this device must accept any interference received, including interference that may cause undesired operation.

15.21 Information to the user.

Any changes or modifications not expressly approved by the party responsible for compliance could void the user's authority to operate the equipment. 15.105 Information for the user.

Note: This equipment has been tested and found to comply with the limits for a Class B digital device, pursuant to part 15 of the FCC rules. These limits are designed to provide reasonable protection against harmful interference in a residential installation. This equipment generates, uses and can radiate radio frequency energy and, if not installed and used in accordance with theinstructions, may cause interference to radio communications. However, there is no guarantee that interference will not occur in a particular installation. If this equipment does cause harmful interference to radio or television reception, which can be determined by turning the equipment off and on, the user is encouraged to try to correct the interference by one or more of the following measures:

- Reorient or relocate the receiving antenna.
- Increase the separation between the equipment and receiver.
- Connecting the equipment to a socket on a circuit different from that to which the receiver is connected.
- Contact with the provider or a radio f TV technician for help.

The device has been evaluated to meet general RF exposure requirement. The device can be

- used in portable exposure condition without restriction.