SM-MSN31-C04

NFC Controller Module with Antenna

Datasheet Version 1.0

Smart Your Life, Approach Your Heart.

3F.-5, No. 1, Taiyuan 2nd St., Zhubei City,
Hsinchu County 30288, Taiwan (R.O.C.)
TEL: 886-3-5601363
Fax: 886-3-5601361
http://www.smart-approach.com.tw

Smart Approach Co., Ltd ("S.A.") retains the right to make changes to its products or specifications to improve performance, reliability or manufacturability. All information in this document, including descriptions of features, functions, performance, technical specifications and availability, is subject to change without notice at any time. While the information furnished herein is held to be accurate and reliable, no responsibility will be assumed by Smart Approach for its use. Furthermore, the information contained herein does not convey to the purchaser of microelectronic devices any license under license under the patent right of any manufacturer.

Smart Approach Co., Ltd is a registered trademark. All other products or service names used in this publication are for identification purposes only, and may be trademarks or registered trademarks of their respective companies. All other trademarks or registered trademarks mentioned herein are the property of their respective holders.

Feedback on the use of any of the document is welcomed and encouraged by Smart Approach.

- Please contact service@smart-approach.com.tw for your feedback or any ordering inquiry.
- Please contact support@smart-approach.com.tw for any technical question.

Revision History

This section describes the changes that were implemented in this document. The changes are listed by revision, starting with the most current publication.

Revision 1.0

Revision 1.0 of this datasheet was published in Apr. 2024. This was the first publication of the document.

Smart Approach Confidential for Advantech

Contents

REVISION HISTORY ..... **- 2 -**
CONTENTS ..... **- 3 -**
FIGURE CONTENTS ..... **- 4 -**
TABLE CONTENTS ..... **- 4 -**
1 PRODUCT OVERVIEW ..... **- 5 -**
1.1 FEATURES ..... - 5 -
1.2 APPLICATION ..... - 5 -
2 FUNCTIONAL DESCRIPTIONS ..... **- 7 -**
2.1 COMMUNICATION OVERVIEW FOR ISO/IEC 14443A / MIFARE CONTROLLER ..... - 8 -
3 ELECTRICAL SPECIFICATIONS ..... **- 9 -**
3.1 Pin Description ..... - 9 -
3.2 I^2C ADDRESS ..... - 10 -
3.3 TEMPERATURE MAXIMUM RATINGS ..... - 10 -
3.4 DC Electrical Parameters ..... - 10 -
3.5 ANTENNA SPECIFICATIONS ..... - 11 -
3.6 POWER CONSUMPTION ..... - 11 -
3.7 THERMAL PROTECTION ..... - 12 -
3.8 SYSTEM POWER MODES ..... - 12 -
3.9 RESET AND DOWNLOAD CONCEPT ..... - 13 -
3.10 NFC CONNECTION RECOMMENDATION ..... - 14 -
3.11 MAIN BOARD DESIGN REFERENCE ..... - 14 -
4 ORDERING INFORMATION ..... **- 15 -**
5 RELIABILITY VERIFICATION ..... **- 15 -**
6 NFC MODULE OUTLINE ..... **- 16 -**

Smart Approach Confidential for Advantech

Figure Contents

Figure 1 Typical Application ..... - 5 -
Figure 2 Typical Application II ..... - 6 -
Figure 3 Module Block Diagram ..... - 7 -
Figure 4 Transmission Modes ..... - 8 -
Figure 5 Reset via V_{EN} pin ..... - 13 -
Figure 6 Connection Recommendation ..... - 14 -
Figure 7 Main Board Design W/O UICC Reference ..... - 14 -
Figure 8 Module Drawing ..... - 16 -
Figure 9 Module FPC Connection Footprint (Button Contact) ..... - 17 -
Figure 10 FPC Wire Dimension ..... - 17 -

Table Contents

Table 1 Module Pin Description ..... - 9 -
Table 2 I^2C Address ..... - 10 -
Table 3 Temperature Maximum Ratings ..... - 10 -
Table 4 DC Electrical Specification ..... - 10 -
Table 5 Antenna Specifications ..... - 11 -
Table 6 Current Consumption ..... - 11 -
Table 7 Thermal Protection ..... - 12 -
Table 8 System Power Modes Description ..... - 12 -
Table 9 Power Mode Configuration ..... - 12 -
Table 10 Reset Timing ..... - 13 -
Table 11 Ordering Information Table ..... - 15 -
Table 12 Reliability Item Table ..... - 15 -

Smart Approach Confidential for Advantech

1 Product Overview

SM-MSN31-C04 is full featured NFC controllers designed for integration in portable equipment. It is optimized for low power consumption with fully host controllable power states and for small footprint for portable equipment applications.

The module's compact, flexible design with and exposed pad is optimal for size-sensitive applications, assures robust performance.

The following illustration shows a high-level, generic view of a SM-MSN31-C04 application.

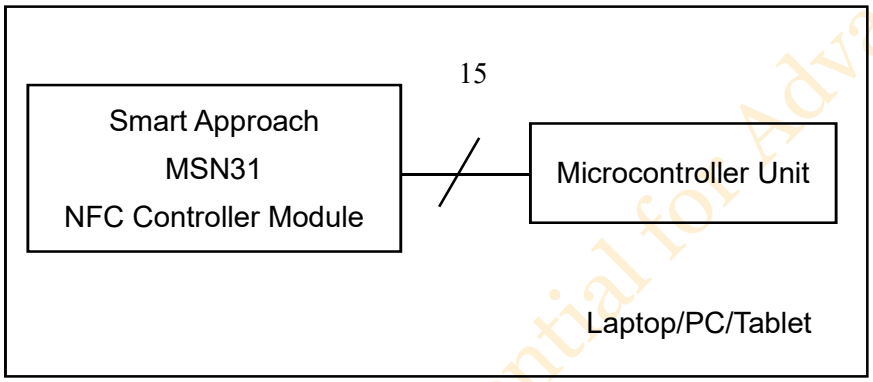

Figure 1 Typical Application

1.1 Features

This section Tables key aspects of the SM-MSN31-C04 module functionality and design that distinguish it from similar products:

- NXP NPC300 NFC Controller
- Full featured NFC controller industry's low power consumption.
- Compliant with ISO/IEC 14443 A/B
- Compliant with 15693/18092
- Antenna pairing could be customized
- I^2C interface

* All card types and it's protocol shall follow NXP's / and NFC forum recommendation.

Cards that comply with the protocol are subject to testing with the host.

1.2 Application

Suggested applications for the SM-MSN31-C04 module include:

- NFC writer
- NFC reader
- NFC peer to peer controller
- NFC identification

Smart Approach Confidential for Advantech

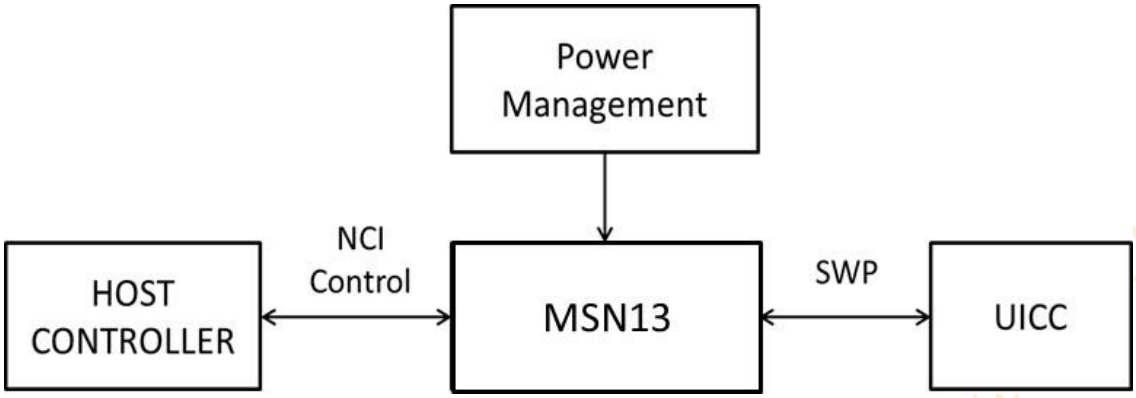

Figure 2 Typical Application II

SM-MSN31-C04 can be connected on a host controller through I^2C-bus interfaces. The logical interface towards the host base band is NCI-compliant with additional command set for SA specific product features. SM-MSN31-C04 can be connected to a UICC through an SWP interface. The SWP physical interface is compliant with ETSI/SCP SWP and HCI.

Moreover, SM-MSN31-C04 provides flexible and integrated power management unit in order to preserve energy supporting Powered by the Field and Power Off mode. It also allows various power schemes for the UICC.

Smart Approach Confidential for Advantech

2 Functional Descriptions

This section provides detailed information about how SM-MSN31-C04 module works, what configurations and operational features are available.

The following illustration shows the primary functional blocks of SM-MSN31-C04 module.

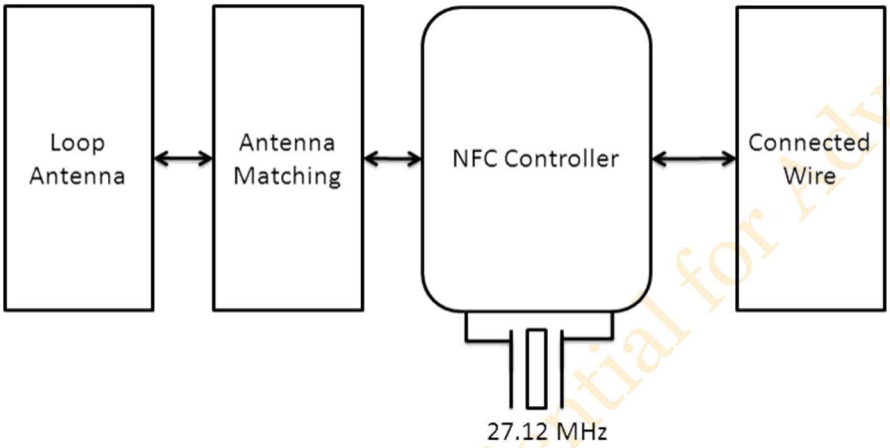

Figure 3 Module Block Diagram

Loop Antenna is Smart Approach customize solution, Antenna size of SM-MSN31-C04 is 32mm x 10 mm. Antenna matching is also a customize solution. NFC controller includes NXP NPC300 chipset, and has an I^2C control interface through the connector to mother board.

Smart Approach Confidential for Advantech

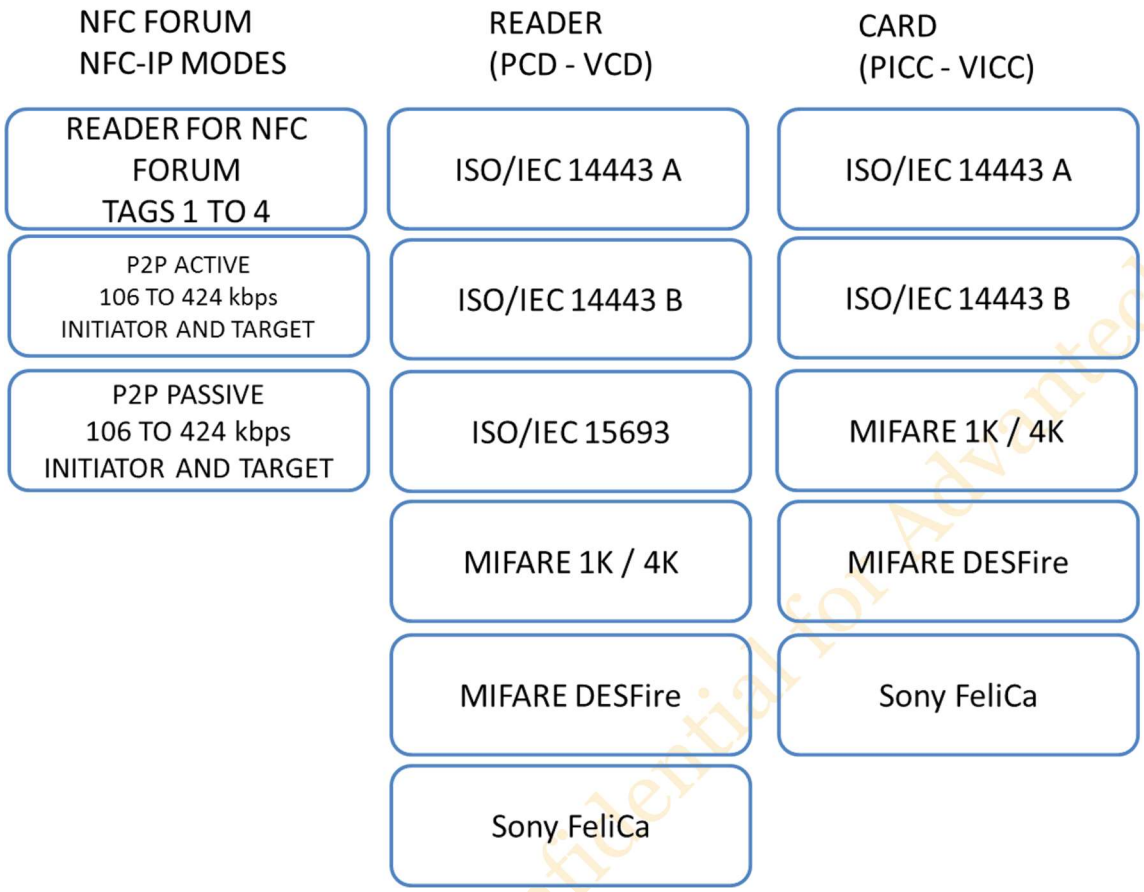

Figure 4 Transmission Modes

For contactless card functionality, SM-MSN31-C04 can act autonomously if previously configured by the host in such a manner. PICC functionality can be supported without device being turned on or even with battery removed.

2.1 Communication overview for ISO/IEC 14443A / MIFARE Controller

The contactless coprocessor and the on-chip CPU of SM-MSN31-C04 handle the complete ISO/IEC 14443A/MIFARE RF-protocol, nevertheless a dedicated external host has to handle the application layer communication.

Smart Approach Confidential for Advantech

3 Electrical Specifications

This section provides the DC characteristics, AC characteristics, recommended operating conditions. It includes information on the various timing functions of the module.

3.1 Pin Description

The following Table shows the pin description for SM-MSN31-C04 module.
The connection ground is internally connected and should be connected to GND on the main board as well.

Table 1 Module Pin Description

PIN No.	Name	Description	Power Reference	P/I/O
1	V_{BAT}	+3.3V power supply input	3.3V	P
2	MOD_GND	Module Ground	GND	P
3	SWP	SWP data line to UICC/SIM, Input / Output	$PMUV_{CC}$	I/O
4	RFU	Unused pin could be floating	-	-
5	IRQ	Interrupt to host, High: Interrupt; Low: Normal	VDD_IO	O
6	$PMUV_{CC}$	Power supply to UICC/SIM, input, + 1.8V	1.8V	P
7	I^2C_SDA	I^2C Data Line	VDD_IO	I/O
8	I^2C_SCL	I^2C Clock	VDD_IO	I
9	MOD_GND	Module Ground	GND	P
10	V_{EN}	Wake up the module from standby mode or reset the module	V_{BAT}	I
11	DWL_REQ	Firmware download control: Active High	VDD_IO	I
12	$SIMV_{CC}$	The power rail used to power UICC / SIM, output pin	$PMUV_{CC}$	P(O)
13	V_{BAT}	+3.3V Power Supply	3.3V	P
14	VDD_IO	+1.8V or +3.3V for host IO reference voltage	1.8V/3.3V	P
15	MOD_GND	Module Ground	GND	P

Sample page Confidential for Advantech

3.2 I²C Address

SM-MSN31-C04 I²C 7bit address is defined to 0x28. To write data, this module is addressed using 0x50, to read data, this module is addressed using 0x51.

Table 2 I²C Address

I2C address (R/W=0, write)	I2C address (R/W=1, read)
0x50	0x51

3.3 Temperature Maximum Ratings

Thermal specifications for this module have been modeled using a two-layer test board.

Table 3 Temperature Maximum Ratings

Symbol	Definition	Value		Units
		Min	Max	
T	Operating Temperature	-20	80	℃
T_S	Storage Temperature	-40	100	℃

3.4 DC Electrical Parameters

DC Electrical specifications for this module have been modeled using a two-layer test board.

Table 4 DC Electrical Specification

Symbol	Definition	Value			Units	Note
		Min	Typ	Max		
P_{VDD}	Pad Supply Voltage	3.1	3.3	5.5	Volts	
I_{VBAT}	DC Current			190	mA	(1)

Note:

(1) Continuous polling total current consumption at 3.0V

Smart Approach Confidential for Advantech

3.5 Antenna Specifications

Antenna specifications for this module have been modeled using a two-layer test board.

Table 5 Antenna Specifications

Item	Value			Unit	Note
	Min	Typ	Max		
DC Resistance	0.5	1	2	Ω	
AC Impedance		50		Ω	
Frequency	13.06	13.56	14.06	MHz	
Q factor	25	30	35		
Antenna Type	FR4 Loop Coil				Add the Ferrite sheet
Size	(32 ± 0.2) X (10 ± 0.2)			mm	

3.6 Power Consumption

Table 6 Current Consumption

Symbol	Parameter	Conditions	Min	Typ	Max	Unit
I_{HPD}	Hard power down current	V_{BAT} =3.6V, V_{EN}=0V	-	10	20	uA
I_{STBY}	Standby state current	V_{BAT} =3.6V	-	20	35	uA
I_{ACT}	Active state current	V_{BAT} =3.6V	-	4.55	-	mA
I_{TVDD}	Transmitter supply current	V_{BAT} =3.0V	-	-	190	mA
I_{PMUVCC}	PMUVCC supply	Class B	-	1.5	4	uA
		Class C	-	1	4	uA

Smart Approach Confidential for Advantech

3.7 Thermal Protection

Table 7 Thermal Protection

Symbol	Parameter	Conditions	Min	Typ	Max	Unit
$T_{OVERTEMP}$	Temperature protection trigger		120	125	130	^{0}C

3.8 System power modes

Table 8 System Power Modes Description

Mode	Description
Full Power mode	The battery supply (V_{BAT}) as well as the pad supply (VDD_IO) is available; VEN voltage is high, all use cases can be executed.
Standby mode	Minimum part of IC is kept supplied to enable configured wake-up source which allow to switch to active state.
Hard Power Down mode	The system is supplied by VBAT. VEN voltage is kept low by host or SW programing to have min. power consumption.

Table 9 Power Mode Configuration

V_{BAT}	VDD_IO	V_{EN}	Power mode
Off	Off	X	Power Off mode
On	X	Off	Hard Power Down mode
On	On	On	Full power mode

Note: X: Don't care

Smart Approach Confidential for Advantech

3.9 Reset and download concept

To enter reset there are 2 ways:

- Pulling V_{EN} low (Hard Power Down state)
- If V_{BAT} monitor is enabled: lowering V_{BAT} below the monitor threshold (monitor mode, if V_{EN} is kept above 1.1 V)

To get out of reset, there is one way:

- Pulling V_{EN} high with V_{BAT} above V_{BAT} monitor threshold if enabled

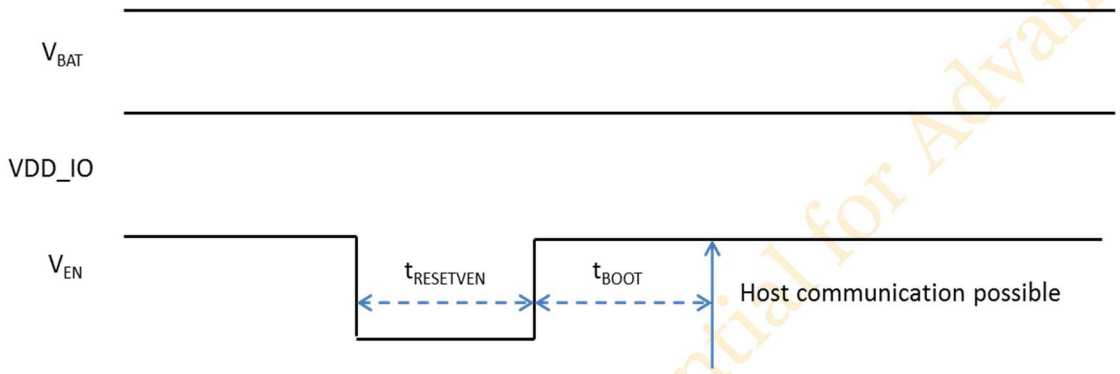

Figure 5 Reset via V_{EN} pin

Table 10 Reset Timing

Symbol	Parameter	Condition	Min	Typ	Max	Unit
$t_{RESETVEN}$	V_{EN} pulse width	to reset	10			μ s
t_{BOOT}	Boot time				2.5	ms

Smart Approach Confidential for Advantech

3.10 NFC Connection Recommendation

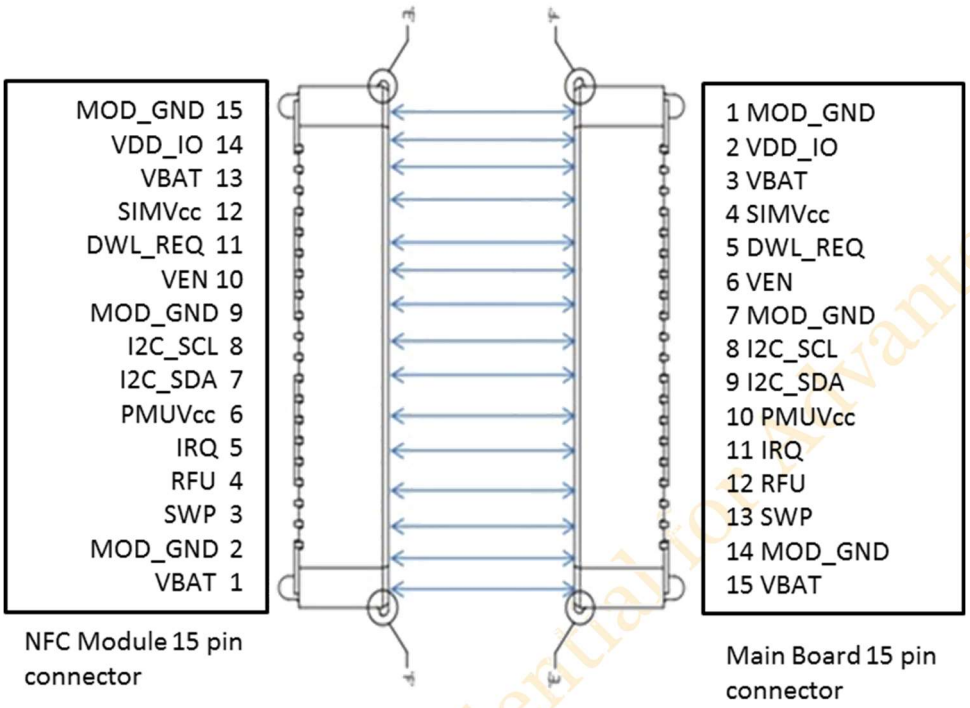

Figure 6 Connection Recommendation

3.11 Main Board Design Reference

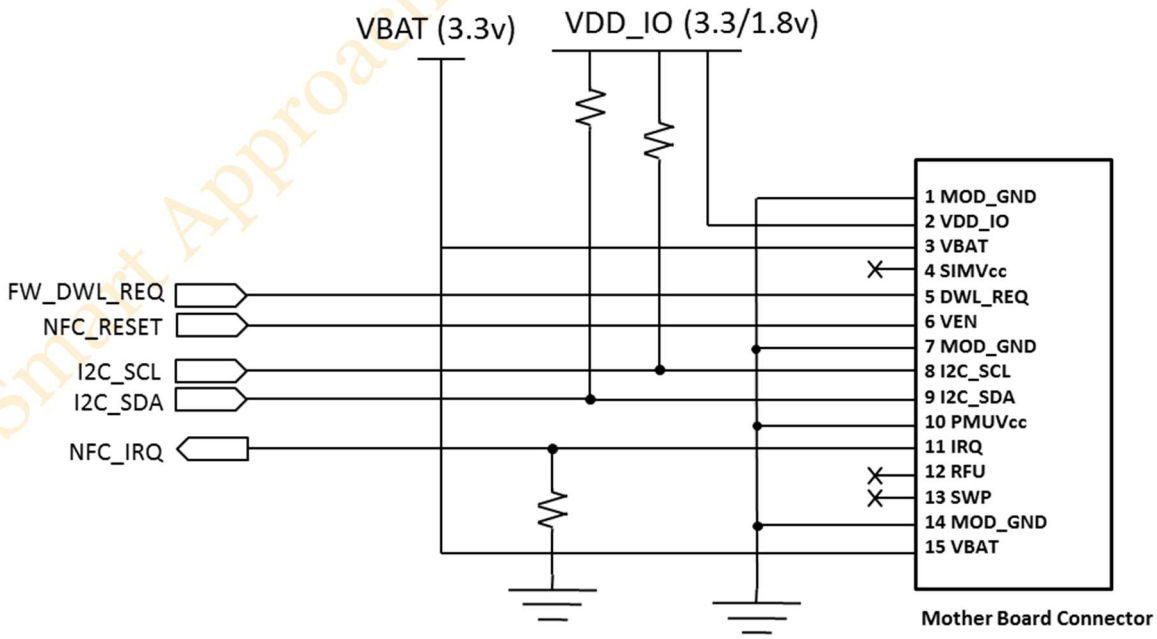

Figure 7 Main Board Design W/O UICC Reference

Smart Approach Confidential for Advantech

4 Ordering Information

Table 11 Ordering Information Table

Order Number	Descriptions
SM-MSN31-C04	NFC Controller Module (NXP NPC300) with Antenna
Dimension	Module: 26.6x10 mm; Antenna Area Size: 32x10 mm
Weight	1.1 ± 0.3g
FW Version	v10.01.18 Note: This firmware version is for reference only. The default firmware of NFC chips may be updated over time. In addition, after the NFC module is installed in the host of the terminal, the module's firmware may be updated from the system's NFC code.

5 Reliability Verification

Table 12 Reliability Item Table

No.	Item	Condition	Benchmark	Result	Qty
1	Low Temperature Storage Test	-40ºC	IEC60068-2-1	Pass	5
2	High Temperature Storage Test	80ºC, Humidity: 95%	IEC60068-2-78	Pass	5
3	Low Temperature Operation Test	-20ºC	IEC60068-2-1	Pass	5
4	High Temperature Operation Test	80ºC	IEC60068-2-2	Pass	5
5	High Temperature Operation Test	65ºC, Humidity: 95%	IEC60068-2-78	Pass	5
6	Salt Test	PH: 3.0 ~ 3.2 ,50°C, 72 hrs, Density: 5%±1%	ASTM B368	Pass	5
7	RoHS	Normal	Compliance	Pass	5
8	HF	Normal	Compliance	Pass	5

Smart Approach Confidential for Advance

6 NFC Module Outline

The following illustration shows the package drawing for SM-MSN31-C04 module. The drawing contains the detail views, dimensions, tolerances, and notes.

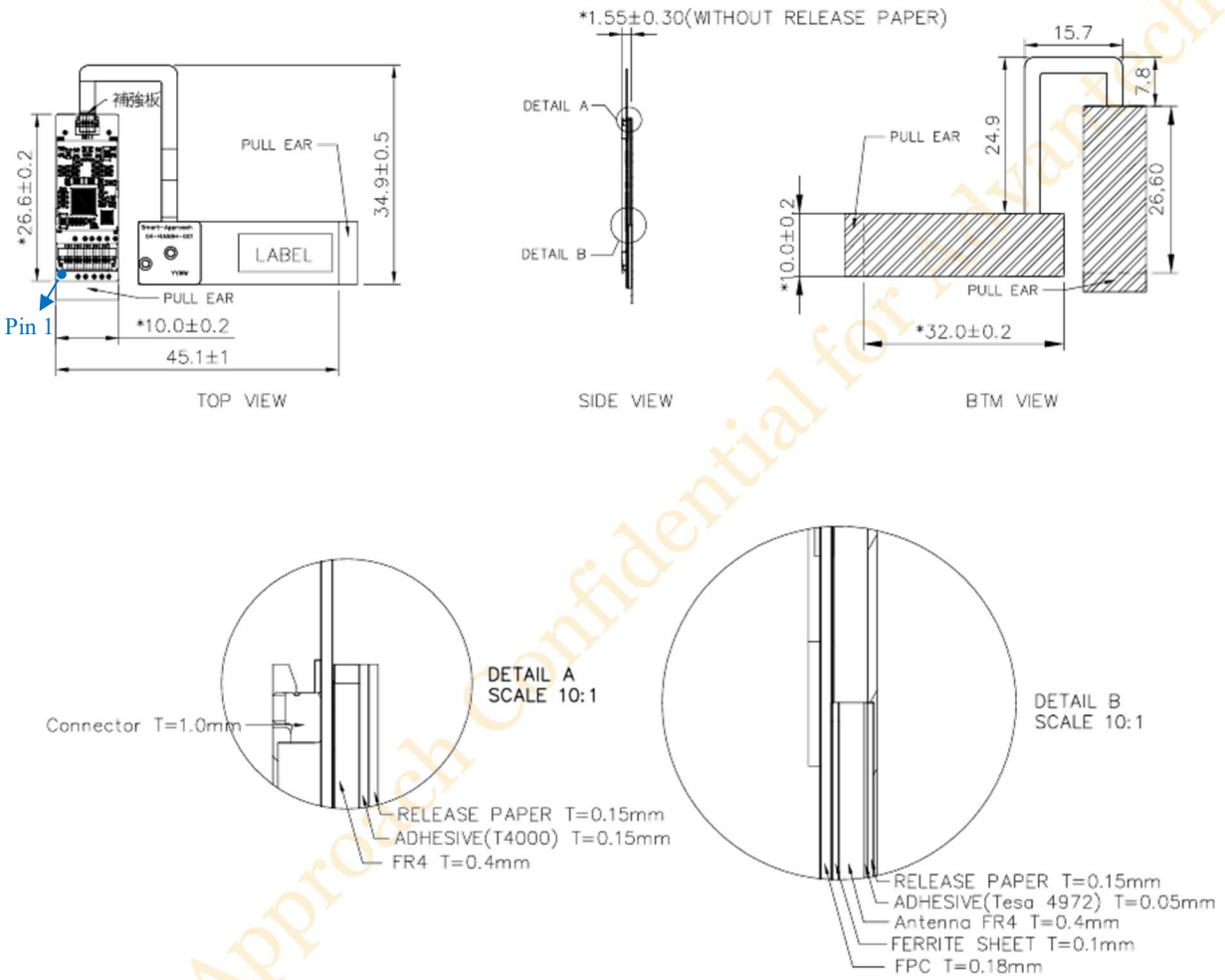

Tolerance unless otherwise specified				
Class	A grade	B grade	C grade	D grade
0~10	±0.1	±0.1	±0.2	±1.0
10~50	±0.15	±0.2	±0.3	±2.0
50~100	±0.15	±0.3	±0.3	±2.0
100~250	±0.2	±0.4	±0.5	±3.0
250~500	~	±0.5	±1.0	±3.0
ANGLE	±1/2	±1	~	~

Note:

Mark “ * ” is process control dimension.

Figure 8 Module Drawing

Smart Approach Confidential for Advantech

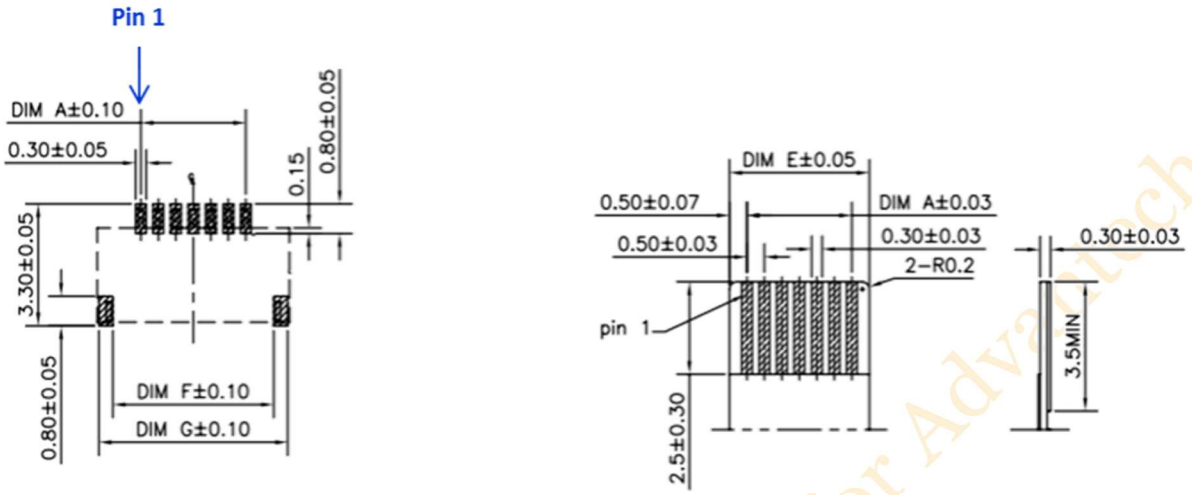

Figure 9 Module FPC Connection Footprint (Button Contact)

CKT	DIM A	DIM B	DIM C	DIM D	DIM E	DIM F	DIM G	DIM H	DIM J	DIM K
10	4.50	7.00	5.57	6.33	5.50	6.10	6.90			
11	5.00	7.50	6.07	6.83	6.00	6.60	7.40			
12	5.50	8.00	6.57	7.33	6.50	7.10	7.90			
13	6.00	8.50	7.07	7.83	7.00	7.60	8.40			
14	6.50	9.00	7.57	8.33	7.50	8.10	8.90			
15	7.00	9.50	8.07	8.83	8.00	8.60	9.40			

Figure 10 FPC Wire Dimension

Smart Approach Confidential for Advantech