AIW-512 Specification

Brand name	Advantech
Product name	AIW-512-C
Advantech P/N	1751000460-01
Manufacturer Part Number	RFA-27-C2M2-U-M70
Manufacture	ARISTOTLE
Manufacture Address	5F., No. 27, Xinmin St., Zhonghe Dist., New Taipei City 235, Taiwan (R.O.C.)
Description	External Dipole antenna Wi-Fi 5/6/6E/7 applications Straight & 90˚bent IP54 level Tri-band 2.4&5&6 GHz
Version	1.2
Date	2024/09/02

Index

No.	Item	Page
1	Revision History	3
2	Specification	4
3	Antenna - S Parameter Test Data	6
4	Antenna – Gain & Radiation Pattern Test Data	7
5	Mechanical Drawing	10
6	Packing Drawing	11

1. Revision History

Version	Date	Change Notification	Description
1.0	2024/03/07	Initial version	
1.1	2024/08/23	Product name	1. Product name : AIW-512-C 2. Add Manufacturer Part Number 3. Modify temperature to 0 ~ 70 ˚C 4. Add SMA Picture on 2D Drawing
1.2	2024/09/02	Connector type	RP-SMA Male

ADVANTECH AIWireless Advantech Industrial Wireless

2. Specification

Sample Photo	
	Antenna Length- 111.7 mm Antenna Diameter- 10 mm

Electrical Characteristics	
Frequency	2400 – 2500 MHz, 5150 – 5850 MHz, 5925 – 7125 MHz
V.S.W. R	<= 2.0 @ 2400 – 2500 MHz <= 2.0 @ 5150 – 5850 MHz <= 3.0 @ 5925 – 7125 MHz
Peak Gain	2.87 dBi @ 2400 – 2500 MHz 3.11 dBi @ 5150 – 5850 MHz 3.22 dBi @ 5925 – 7125 MHz
Efficiency	74~78 % @ 2400 – 2500 MHz 71~77 % @ 5150 – 5850 MHz 67~78 % @ 5925 – 7125 MHz
Polarization	Linear
Radiation Pattern	Omni-direction
Impedance	50 ohm
Application	Wi-Fi 6 & 6E & 7, BT, Zigbee
Antenna Type	Dipole
Material & Mechanical Characteristics	
Antenna Length	111.7 mm
Antenna Diameter	10 mm
Material of Radiator	NA
Material of Plastic	ABS
Antenna housing color	Black
Cable Type	RG-178 B/U
Connector Type	RP-SMA Male

Environmental	
Operation Temperature	0 ~ 70 ˚C
Storage Temperature(˚C)	0 ~ 70 ˚C
Ingress Protection	IP54
Power Handling	2 W

ADVANTECH AIWireless Advantech Industrial Wireless

3. Antenna - S Parameter Test Data

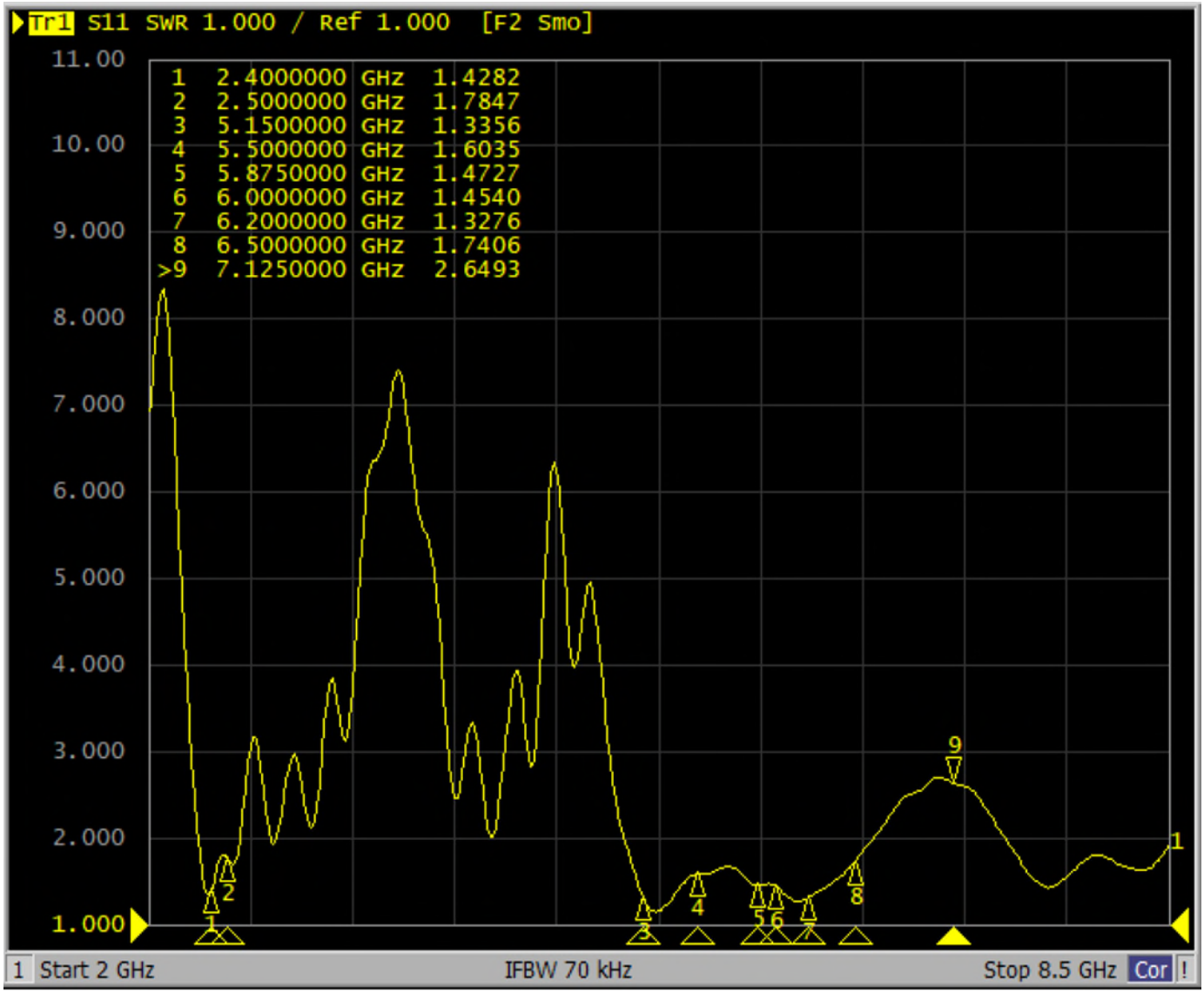

4. Antenna – Gain & Radiation Pattern Test Data

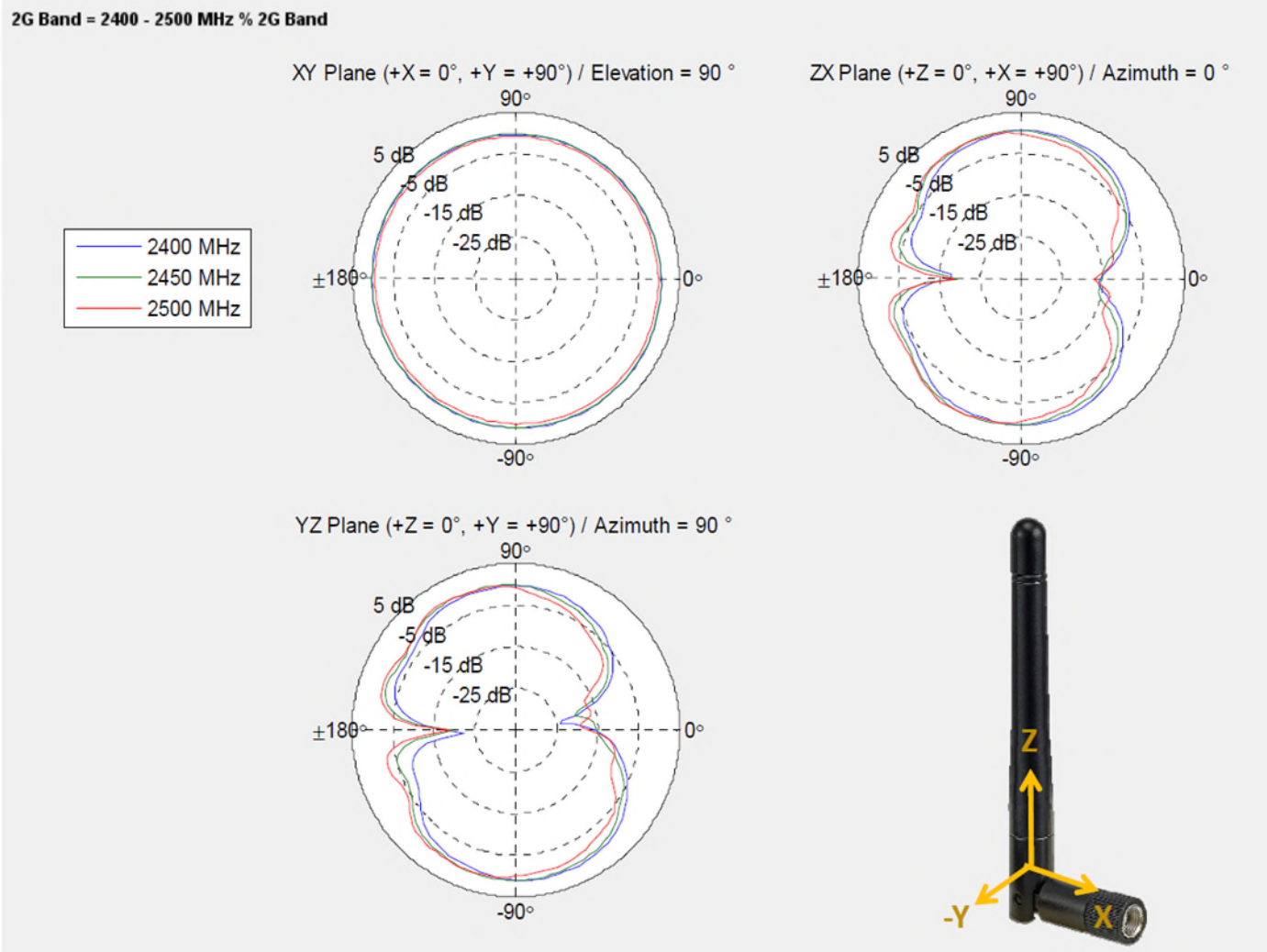

,

Frequency(MHz)	2400	2450	2500
Peak Gain(dBi)	2.61	2.87	2.49
Efficiency(%)	77.54	75.72	73.59
Efficiency(dB)	-1.10	-1.21	-1.33

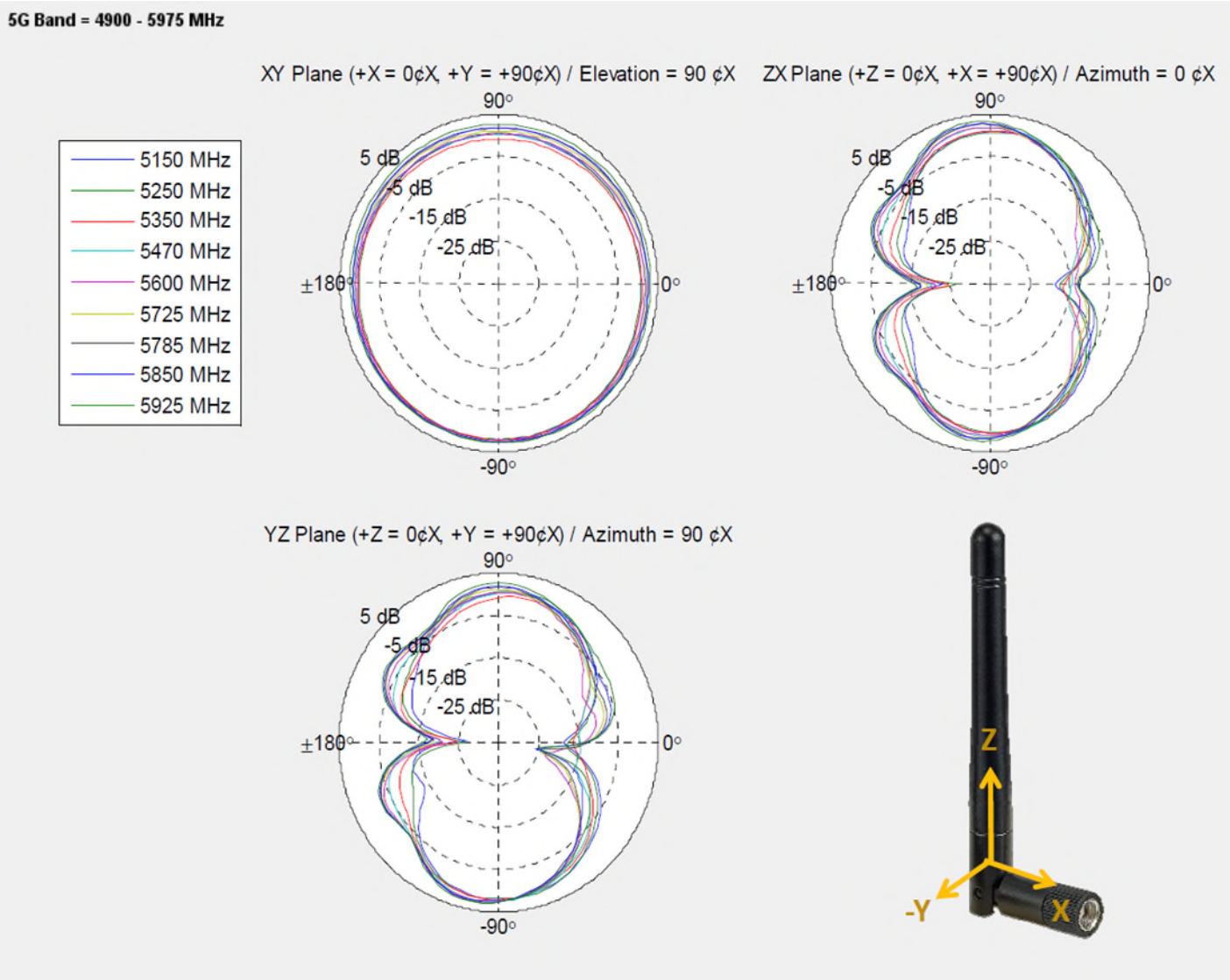

Frequency(MHz)	5150	5250	5350	5470	5600	5725	5785	5850	5925
Peak Gain(dBi)	2.82	2.82	2.96	3.11	2.99	3.04	3.06	2.98	3.15
Efficiency(%)	73.92	75.31	71.01	77.30	74.57	75.44	76.28	77.29	77.45
Efficiency(dB)	-1.31	-1.23	-1.49	-1.12	-1.27	-1.22	-1.18	-1.12	-1.11

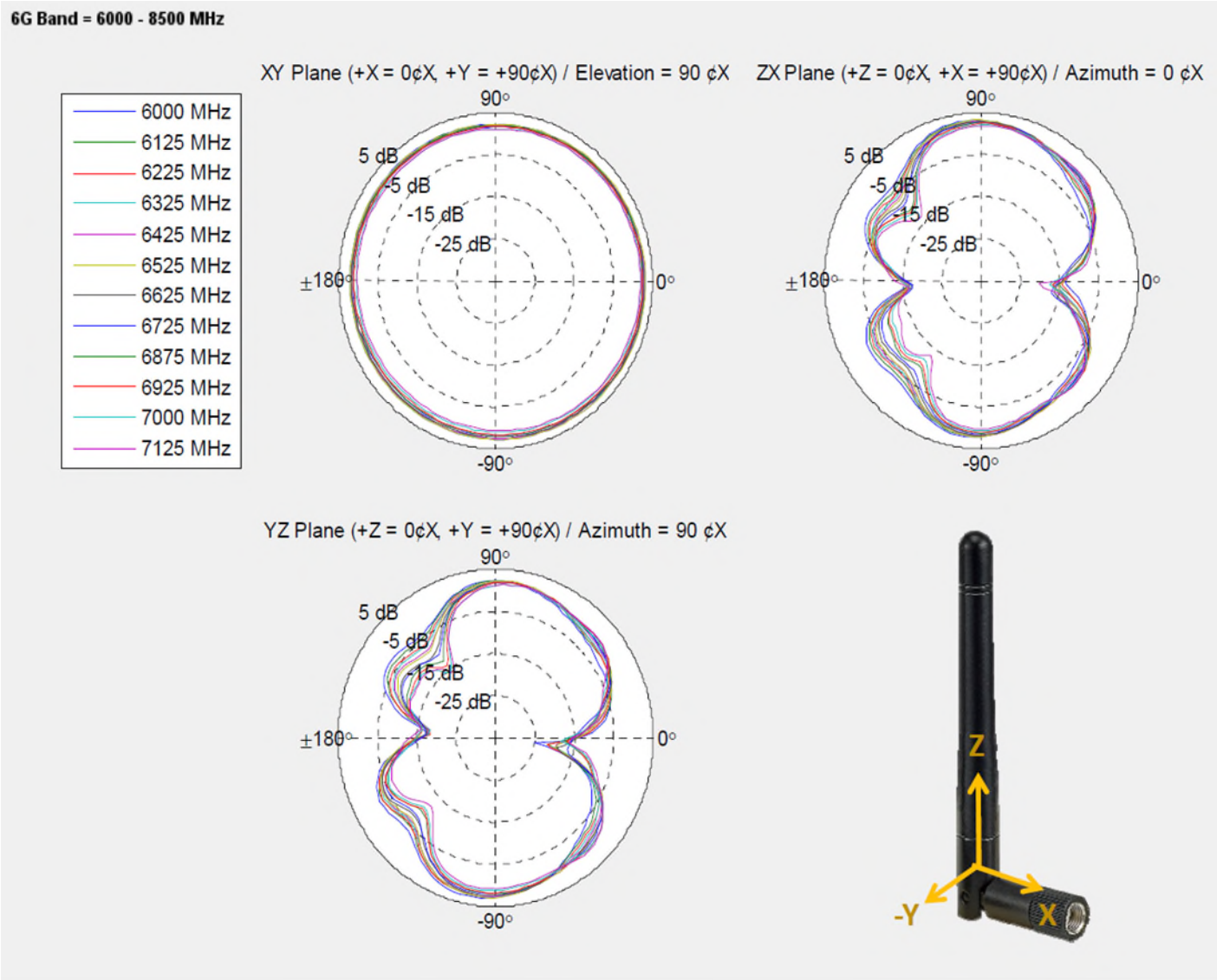

Frequency(MHz)	6000	6125	6225	6325	6425	6525	6625	6725	6875	6925	7000	7125
Peak Gain(dBi)	3.22	2.97	2.79	2.89	2.78	3.08	2.72	2.65	2.61	2.47	2.04	1.94
Efficiency(%)	78.45	76.42	74.59	74.65	75.03	76.18	74.17	72.63	70.68	70.77	69.84	67.23
Efficiency(dB)	-1.05	-1.17	-1.27	-1.27	-1.25	-1.18	-1.30	-1.39	-1.51	-1.50	-1.56	-1.72

5. Mechanical Drawing

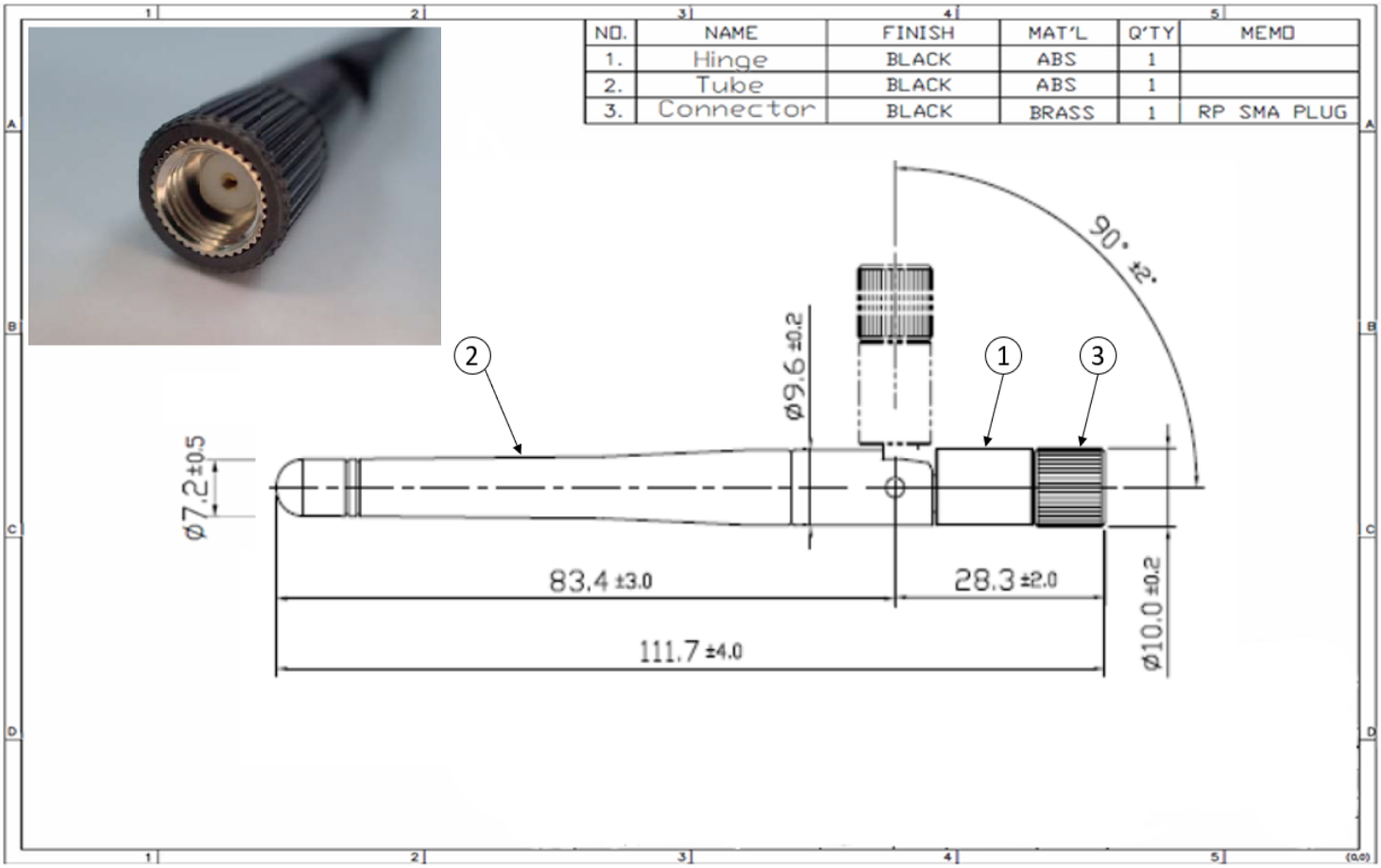

Advantech Industrial Wireless

6. Packing Drawing

產品包裝規範

PACKING CRITERION

Part Number	1751000460-01	**Name**	AIW-512-C

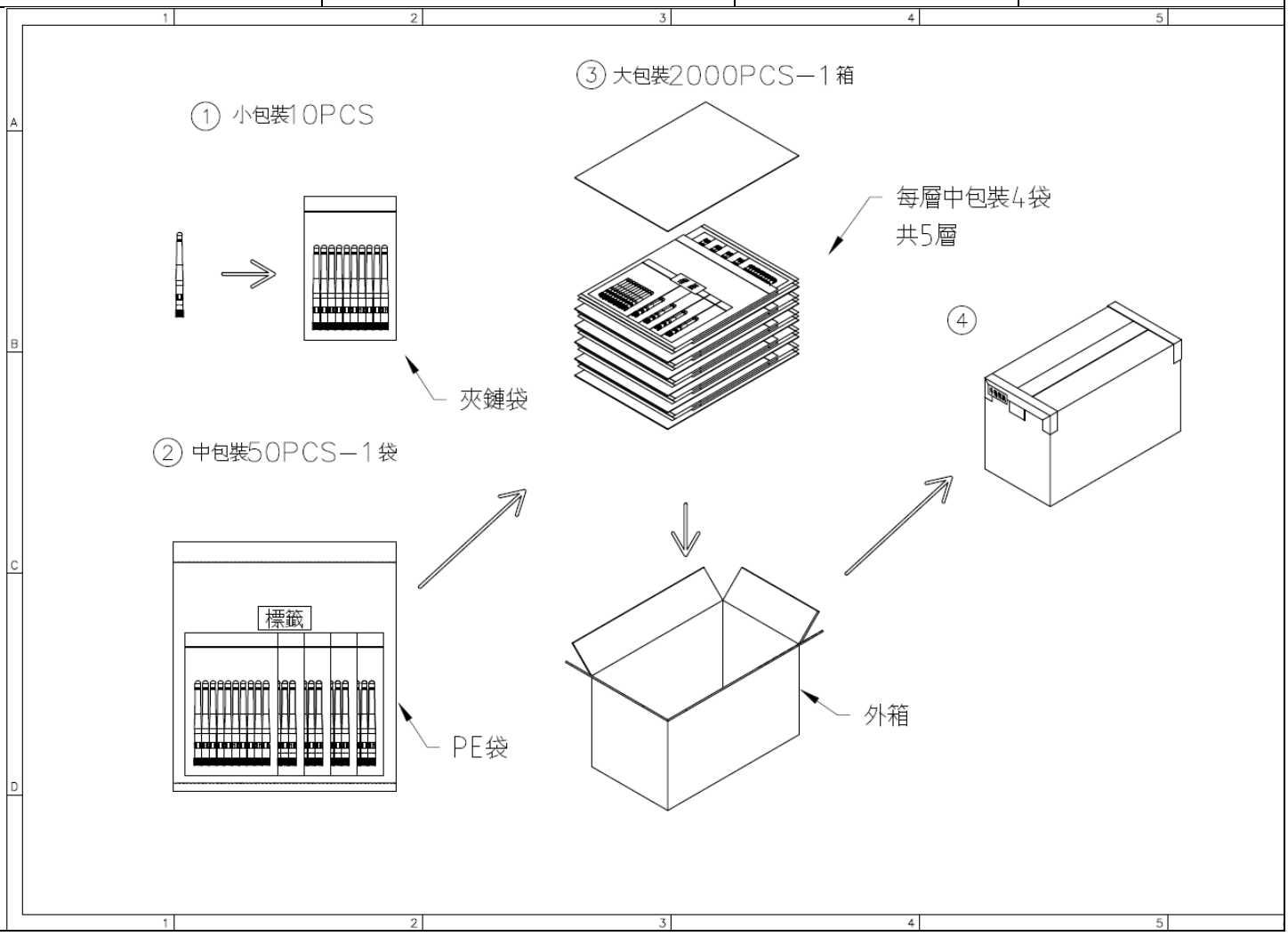

ADVANTECH

AIWireless

Advantech Industrial Wireless