FCC/ISED RF TEST REPORT

ISSUED BY
Shenzhen BALUN Technology Co., Ltd.

FOR

Computer

ISSUED TO
Advantech Co., Ltd.

NO.1, Alley 20, Lane 26, Rueiguang Road, Neihu District, Taipei 114, Taiwan

Report No.:	BL-EC1980077-604
EUT Name:	Computer
Model Name:	DLT-V7212P+ (refer section 2.4)
Brand Name:	ADVANTECH DLOG
Test Standard:	47 CFR Part 15 Subpart E RSS-247 (Issue 2, February 2017)
FCC ID:	M82-DLTV72INT
ISED Number:	9404A-DLTV72INT
Test Conclusion:	Pass
Test Date:	Jun. 28, 2017 ~ Jun. 30, 2017
Date of Issue:	Nov. 21, 2019

Tested by: Heng Aiping
(Engineer)
Date Nov 21, 2019

Approved by: Wei Yanquan
(Chief Engineer)
Date Nov. 21, 2019

NOTE: This test report of test results only related to testing samples, which can be duplicated completely for the legal use with the approval of the applicant; it shall not be reproduced except in full, without the written approval of Shenzhen BALUN Technology Co., Ltd. Any objections should be raised within thirty days from the date of issue. To validate the report, please contact us.

Block B, 1st FL, Baisha Science and Technology Park, Shahe Xi Road, Nanshan District, Shenzhen, Guangdong, P. R. China 518055
TEL: +86-755-66850100, FAX: +86-755-61824271
Email: qc@baluntek.com
www.baluntek.com

Revision History

Version	Issue Date	Revisions
Rev. 01	Oct. 29, 2019	Initial Issue
Rev. 02	Nov. 12, 2019	Updated the FCC ID and ISED Number
Rev. 03	Nov. 21, 2019	Updated calibration plot on page 15

TABLE OF CONTENTS

1 ADMINISTRATIVE DATA (GENERAL INFORMATION) 4

1.1 Identification of the Testing Laboratory 4

1.2 Identification of the Responsible Testing Location 4

1.3 Laboratory Condition 4

1.4 Announce 4

2 PRODUCT INFORMATION 5

2.1 Applicant Information 5

2.2 Manufacturer Information 5

2.3 Factory Information 5

2.4 General Description for Equipment under Test (EUT) 5

2.5 Technical Information 6

3 SUMMARY OF TEST RESULTS 7

3.1 Test Standards 7

3.2 Verdict 7

3.3 Test Uncertainty 7

4 GENERAL TEST CONFIGURATIONS 8

4.1 Test Environments 8

4.2 Test Equipment List 8

4.3 Description of Test Setup 9

4.3.1 Conducted Test Setup Configuration 9

5 Test Type and Test Results 10

5.1 DFS 10

5.1.1 U-NII DFS Rule Requirements 10

5.1.2 Test Limits and Radar Signal Parameters 11

ANNEX A TEST RESULT 19

A.1 CHANNEL CLOSING TRANSMISSION AND CHANNEL MOVE TIME 19

A.2 NON- OCCUPANCY PERIOD..... 19
ANNEX B TEST SETUP PHOTOS..... 20
ANNEX C EUT EXTERNAL PHOTOS..... 20
ANNEX D EUT INTERNAL PHOTOS..... 20

1 ADMINISTRATIVE DATA (GENERAL INFORMATION)

1.1 Identification of the Testing Laboratory

Company Name	Shenzhen BALUN Technology Co., Ltd.
Address	Block B, 1st FL, Baisha Science and Technology Park, Shahe Xi Road, Nanshan District, Shenzhen, Guangdong Province, P. R. China
Phone Number	+86 755 6685 0100

1.2 Identification of the Responsible Testing Location

Test Location	Shenzhen BALUN Technology Co., Ltd.
Address	Block B, 1st FL, Baisha Science and Technology Park, Shahe Xi Road, Nanshan District, Shenzhen, Guangdong Province, P. R. China
Accreditation Certificate	The laboratory has been listed by Industry Canada to perform electromagnetic emission measurements. The recognition numbers of test site are 11524A-1. The laboratory is a testing organization accredited by FCC as a accredited testing laboratory. The designation number is CN1196. The laboratory is a testing organization accredited by American Association for Laboratory Accreditation(A2LA) according to ISO/IEC 17025.The accreditation certificate is 4344.01. The laboratory is a testing organization accredited by China National Accreditation Service for Conformity Assessment (CNAS) according to ISO/IEC 17025. The accreditation certificate number is L6791.
Description	All measurement facilities used to collect the measurement data are located at Block B, FL 1, Baisha Science and Technology Park, Shahe Xi Road, Nanshan District, Shenzhen, Guangdong Province, P. R. China 518055

1.3 Laboratory Condition

Ambient Temperature	20℃ to 25℃
Ambient Relative Humidity	45% to 55%
Ambient Pressure	100 kPa to 102 kPa

1.4 Announce

(1) The test report reference to the report template version v4.6.

(2) The test report is invalid if not marked with the signatures of the persons responsible for preparing and approving the test report.

(3) The test report is invalid if there is any evidence and/or falsification.

(4) The results documented in this report apply only to the tested sample, under the conditions and modes of operation as described herein.

(5) This document may not be altered or revised in any way unless done so by BALUN and all revisions are duly noted in the revisions section.

(6) Content of the test report, in part or in full, cannot be used for publicity and/or promotional purposes without prior written approval from the laboratory.

2 PRODUCT INFORMATION

2.1 Applicant Information

Applicant	Advantech Co., Ltd.
Address	NO.1, Alley 20, Lane 26, Rueiguang Road, Neihu District, Taipei 114, Taiwan

2.2 Manufacturer Information

Manufacturer	Advantech Co., Ltd.
Address	NO.1, Alley 20, Lane 26, Rueiguang Road, Neihu District, Taipei 114, Taiwan

2.3 Factory Information

Factory	N/A
Address	N/A

2.4 General Description for Equipment under Test (EUT)

EUT Name	Computer
Model Name Under Test	DLT-V7212P+
Series Model Name	DLT-V7210XXXXXXXXX, DLT-V7212XXXXXXXXX (X can be 0-9, A-Z, a-z, any symbol, blank or nothing)
Description of Model name differentiation	The difference between the two series models is a different screen size, All models have two internal antennas and one external antenna.
Hardware Version	N/A
Software Version	N/A
Dimensions (Approx.)	N/A
Weight (Approx.)	N/A

2.5 Technical Information

Network and Wireless connectivity	2G Network GSM/GPRS/EDGE 900/1800 MHz 3G Network WCDMA/HSDPA/HSUPA Band 1/2/5/8 4G Network FDD LTE Band 1/2/3/4/5/7/8/12/20 TDD LTE Band 38/40/41 Bluetooth 4.0 BLE WIFI 802.11a, 802.11b, 802.11g, 802.11n(HT20/40) and 802.11ac GPS, GLONASS

The requirement for the following technical information of the EUT was tested in this report:

Frequency Range			5250 MHz to 5350 MHz, 5470 MHz to 5725 MHz
Product Type			☒ Mobile ☐ Portable ☐ Fix Location
Maximum Output Power			5250 MHz to 5350 MHz: 13.20 dBm 5470 MHz to 5725 MHz: 13.60 dBm
Antenna Type	Internal Antenna 1	ANT 0	PIFA Antenna
		ANT 1	
	Internal Antenna 2	ANT 0	PIFA Antenna
		ANT 1	
	External Antenna		Dipole Antenna
Antenna Gain	Internal Antenna 1	ANT 0	2.70 dBi (In test items related to antenna gain, the final results reflect this figure.)
		ANT 1	2.80 dBi (In test items related to antenna gain, the final results reflect this figure.)
	Internal Antenna 2	ANT 0	2.64 dBi (In test items related to antenna gain, the final results reflect this figure.)
		ANT 1	2.85 dBi (In test items related to antenna gain, the final results reflect this figure.)
	External Antenna		2.90 dBi (In test items related to antenna gain, the final results reflect this figure.)
Note: This device (Client) is without radar detection, then the manufacturer statement confirming that information regarding the parameters of the detected Radar Waveforms is not available to the end user. And the device doesn't have Ad Hoc mode on DFS frequency band.			

3 SUMMARY OF TEST RESULTS

3.1 Test Standards

No.	Identity	Document Title
1	47 CFR Part 15 Subpart E	Unlicensed National Information Infrastructure Devices
2	KDB Publication 905462 D02v02	UNII DFS Compliance Procedures New Rules
3	KDB Publication 905462 D03v01r02	UNII Clients Without Radar Detection New Rules
4	KDB Publication 789033 D02v01r4	Guidelines for Compliance Testing of Unlicensed National Information Infrastructure (U-NII) Devices Part 15, Subpart E
5	RSS-247 (Issue 2, Feb 2017)	Digital Transmission Systems (DTSs), Frequency Hopping Systems(FHSs) and Licence-Exemp Local Area Network (LE-LAN) Devices

3.2 Verdict

No.	Description	FCC Part No.	RSS Part No.	Verdict	Remark
1	Channel Move Time	15.407	RSS-247, 6.3	Pass	Applicable
2	Channel Closing Transmission Time	15.407	RSS-247, 6.3	Pass	Applicable
3	Non- Occupancy Period	15.407	RSS-247, 6.3	Pass	Applicable
Note: Because the RF module installed in the EUT is electronically and mechanically identical to the original certified module in the test report No. 170524-01.TR06 (FCC ID: PD99260NG) (ISED ID: 1000M-9260NG) (which issued by Intel Mobile Communications France S.A.S – WRF Lab on Jul. 17, 2017). All test items please refer to the No. 170524-01.TR06 (FCC ID: PD99260NG) (ISED ID: 1000M-9260NG) (which issued by Intel Mobile Communications France S.A.S – WRF Lab on Jul. 17, 2017).					

3.3 Test Uncertainty

The following measurement uncertainty levels have been estimated for tests performed on the EUT as specified in CISPR 16-4-2.This uncertainty represents an expanded uncertainty expressed at approximately the 95% confidence level using a coverage factor of k=2.

Measurement	Value
Occupied Channel Bandwidth	±4%
RF output power, conducted	±1.4 dB
Power Spectral Density, conducted	±2.5 dB
Unwanted Emissions, conducted	±2.8 dB
All emissions, radiated	±5.4 dB
Temperature	±1°C
Humidity	±4%

4 GENERAL TEST CONFIGURATIONS

4.1 Test Environments

During the measurement, the normal environmental conditions were within the listed ranges:

Relative Humidity	45% to 55%	
Atmospheric Pressure	100 kPa to 102 kPa	
Temperature	NT (Normal Temperature)	+22℃ to +25℃
	LT (Low Temperature)	-30℃
	HT (High Temperature)	+50℃
Working Voltage of the EUT	NV (Normal Voltage)	24 V
	LV (Low Voltage)	12 V
	HV (High Voltage)	48 V

4.2 Test Equipment List

Description	Manufacturer	Model	Serial No.	Cal. Date	Cal. Due
Spectrum Analyzer	ROHDE&SCHWARZ	FSV-30	103118	2019.06.13	2020.06.12
Vector Signal Generator	ROHDE&SCHWARZ	SMBV100A	260592	2019.06.13	2020.06.12
Signal Generator	ROHDE&SCHWARZ	SMB100A	177746	2019.08.23	2020.08.22
Switch Unit with OSP-B157	ROHDE&SCHWARZ	OSP120	101270	2019.06.13	2020.06.12
Spectrum Analyzer	AGILENT	E4440A	MY45304434	2018.11.01	2019.10.31
EMI Receiver	ROHDE&SCHWARZ	ESRP	101036	2019.06.13	2020.06.12
LISN	SCHWARZBECK	NSLK 8127	8127-687	2019.06.13	2020.06.12
Bluetooth Tester	ROHDE&SCHWARZ	CBT	101005	2019.06.13	2020.06.12
Power Splitter	KMW	DCPD-LDC	1305003215	--	--
Power Sensor	ROHDE&SCHWARZ	NRP-Z21	103971	2019.06.13	2020.06.12
Attenuator (20 dB)	KMW	ZA-S1-201	110617091	--	--
Attenuator (6 dB)	KMW	ZA-S1-61	1305003189	--	--
DC Power Supply	ROHDE&SCHWARZ	HMP2020	018141664	2018.06.14	2019.06.13
Temperature Chamber	ANGELANTIONI SCIENCE	NTH64-40A	1310	2019.07.02	2020.07.01
Test Antenna-Rod(9 kHz-30 MHz)	SCHWARZBECK	VAMP 9243	9243-556	2016.07.19	2021.07.18
Test Antenna-Loop(9 kHz-30 MHz)	SCHWARZBECK	FMZB 1519	1519-037	2017.11.09	2019.11.08
Test Antenna-Bi-Log(30 MHz-3 GHz)	SCHWARZBECK	VULB 9163	9163-624	2015.07.22	2021.07.21
Test Antenna-Horn(1-18 GHz)	SCHWARZBECK	BBHA 9120D	9120D-1148	2015.07.22	2021.07.21
Test Antenna-Horn(15-26.5 GHz)	SCHWARZBECK	BBHA 9170	9170-305	2019.06.21	2020.06.20
Test Antenna-	A-INFO	LB-180400	J211060273	2019.01.06	2021.01.05

Description	Manufacturer	Model	Serial No.	Cal. Date	Cal. Due
Horn (18-40 GHz)		KF			
Anechoic Chamber	RAINFORD	9m*6m*6m	N/A	2019.02.21	2021.02.20
Anechoic Chamber	EMC Electronic Co., Ltd	20.10*11.60 *7.35m	N/A	2017.08.08	2019.08.07
Shielded Enclosure	ChangNing	CN-130701	130703	--	--

4.3 Description of Test Setup

4.3.1 Conducted Test Setup Configuration

Client without Radar Detection Mode

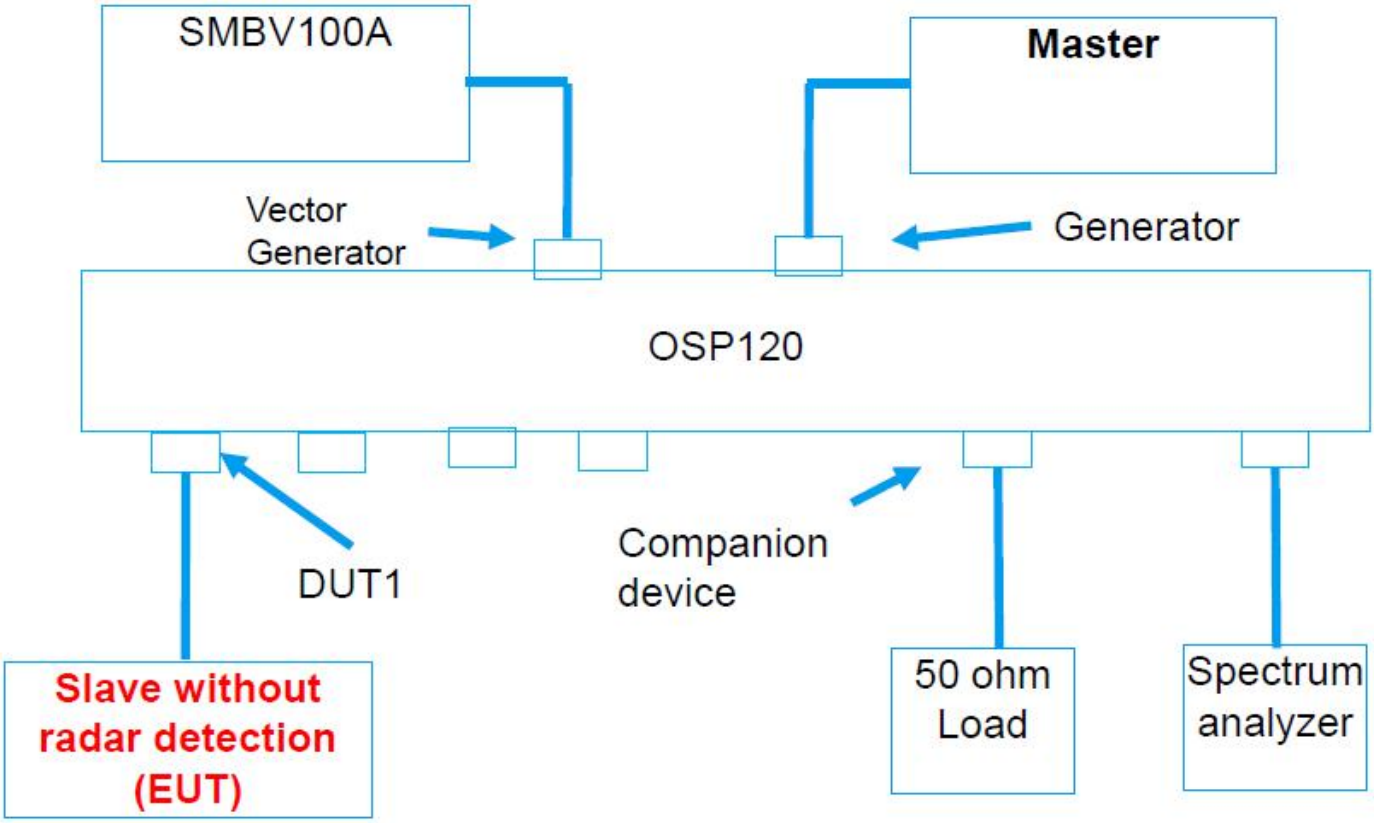

The UUT is a U-NII Device operating in Client mode without radar detection. The radar test signals are injected into the Master Device.

(Diagram 1)

5 Test Type and Test Results

5.1 DFS

5.1.1 U-NII DFS Rule Requirements

5.1.1.1 Working Mode and Required Test Items

The manufacturer shall state whether the UUT is capable of operating as a Master and/or a Client. If the UUT is capable of operating in more than one operating mode then each operating mode shall be tested separately. See tables 1 and 2 for the applicability of DFS requirements for each of the operational modes.

APPLICABILITY OF DFS REQUIREMENTS PRIOR TO USE A CHANNEL

Requirement	Operational Mode		
	Master	Client without radar detection	Client with radar detection
Non-Occupancy Period	✓	✓	✓
DFS Detection Threshold	✓	Not required	✓
Channel Availability Check Time	✓	Not required	Not required
Uniform Spreading	✓	Not required	Not required
U-NII Detection Bandwidth	✓	Not required	✓

APPLICABILITY OF DFS REQUIREMENTS DURING NORMAL OPERATION

Requirement	Operational Mode		
	Master	Client without radar detection	Client with radar detection
DFS Detection Threshold	✓	Not required	✓
Channel Closing Transmission Time	✓	✓	✓
Channel Move Time	✓	✓	✓
U-NII Detection Bandwidth	✓	Not required	✓

5.1.2 Test Limits and Radar Signal Parameters

Detection Thereshold Values

DFS DETECTION THRESHOLDS FOR MASTER DEVICES AND CLIENT DEVICES WITH RADAR DETECTION

Maximum Transmit Power	Value (See Note 1 & 2)
≥ 200 milliwatt	-64 dBm
< 200 milliwatt	-62 dBm
Note 1: This is the level at the input of the receiver assuming a 0 dBi receive antenna. Note 2: Throughout these test procedures an additional 1 dB has been added to the amplitude of the test transmission waveforms to account for variations in measurement equipment. This will ensure that the test signal is at or above the detection threshold level to trigger a DFS response.	

DFS RESPONSE REQUIREMENT VALUES

Parameter	Value
Non-occupancy period	Minimum 30 minutes
Channel Availability Check Time	60 seconds
Channel Move Time	10 seconds See Note 1.
Channel Closing Transmission Time	200 milliseconds + an aggregate of 60 milliseconds over remaining 10 second period. See Note 1&2.
U-NII Detection Bandwidth	100% of the UNII transmission power bandwidth. See Note 3.
Note 1: The instant that the Channel Move Time and the Channel Closing Transmission Time begins is as follows: • For the Short Pulse Radar Test Signals this instant is the end of the Burst. • For the Frequency Hopping radar Test Signal, this instant is the end of the last radar Burst generated. • For the Long Pulse Radar Test Signal this instant is the end of the 12 second period defining the Radar Waveform. Note 2: The Channel Closing Transmission Time is comprised of 200 milliseconds starting at the beginning of the Channel Move Time plus any additional intermittent control signals required to facilitate a Channel move (an aggregate of 60 milliseconds) during the remainder of the 10 second period. The aggregate duration of control signals will not count quiet periods in between transmissions. Note 3: During the U-NII Detection Bandwidth detection test, radar type 1 is used and for each frequency step the minimum percentage of detection is 90 percent. Measurements are performed with no data traffic.	

Parameters of DFS Test Signals

Step intervals of 0.1 microsecond for Pulse Width, 1 microsecond for PRI, 1 MHz for chirp width and 1 for the number of pulses will be utilized for the random determination of specific test waveforms.

SHORT PULSE RADAR TEST WAVEFORMS

Radar Type	Pulse Width (μsec)	PRI (μsec)	Number of Pulses	Minimum Percentage of Successful Detection	Minimum Number of Trials
0	1	1428	18	See Note	See Note
1	1	Test A: 15 unique PRI values randomly selected from the list of 23 PRI values in Table 5a Test B: 15 unique PRI values randomly selected within the range of 518-3066 μsec, with a minimum increment of 1 μsec, excluding PRI values selected in Test A	$\text{Roundup}\left\{\left(\frac{1}{360}\right)\cdot\left(\frac{19\cdot 10^6}{\text{PRI}_{\mu\text{sec}}}\right)\right\}$	60%	30
2	1-5	150-230	23-29	60%	30
3	6-10	200-500	16-18	60%	30
4	11-20	200-500	12-16	60%	30
Aggregate (Radar Types 1-4)				80%	120
Note: Short Pulse Radar Type 0 should be used for the detection bandwidth test, channel move time, and channel closing time tests.					

LONG PULSE RADAR TEST WAVEFORM

Radar Type	Pulse Width (μsec)	Chirp Width (MHz)	PRI (μsec)	Number of Pulses per Burst	Number of Bursts	Minimum Percentage of Successful Detection	Minimum Number of Trials
5	50-100	5-20	1000-2000	1-3	8-20	80%	30

FREQUENCY HOPPING RADAR TEST WAVEFORM

Radar Type	Pulse Width (μsec)	PRI (μsec)	Pulses per Hop	Hopping Rate (kHz)	Hopping Sequence Length (msec)	Minimum Percentage of Successful Detection	Minimum Number of Trials
6	1	333	9	0.333	300	70%	30

5.1.2.1 Test Setup

See 4.3 for test setup description for the radiated test. The photo of test setup please refer to ANNEX B.

5.1.2.2 Test Procedure

DFS MEASUREMENT SYSTEM:

A complete DFS Measurement System consists of two subsystems: (1) the Radar Signal Generating Subsystem and (2) the Traffic Monitoring Subsystem. The control PC is necessary for generating the Radar waveforms in Table 6, 7 and 8. The traffic monitoring subsystem is specified to the type of unit under test (UUT).

Conducted setup configuration of ADT DFS Measurement System

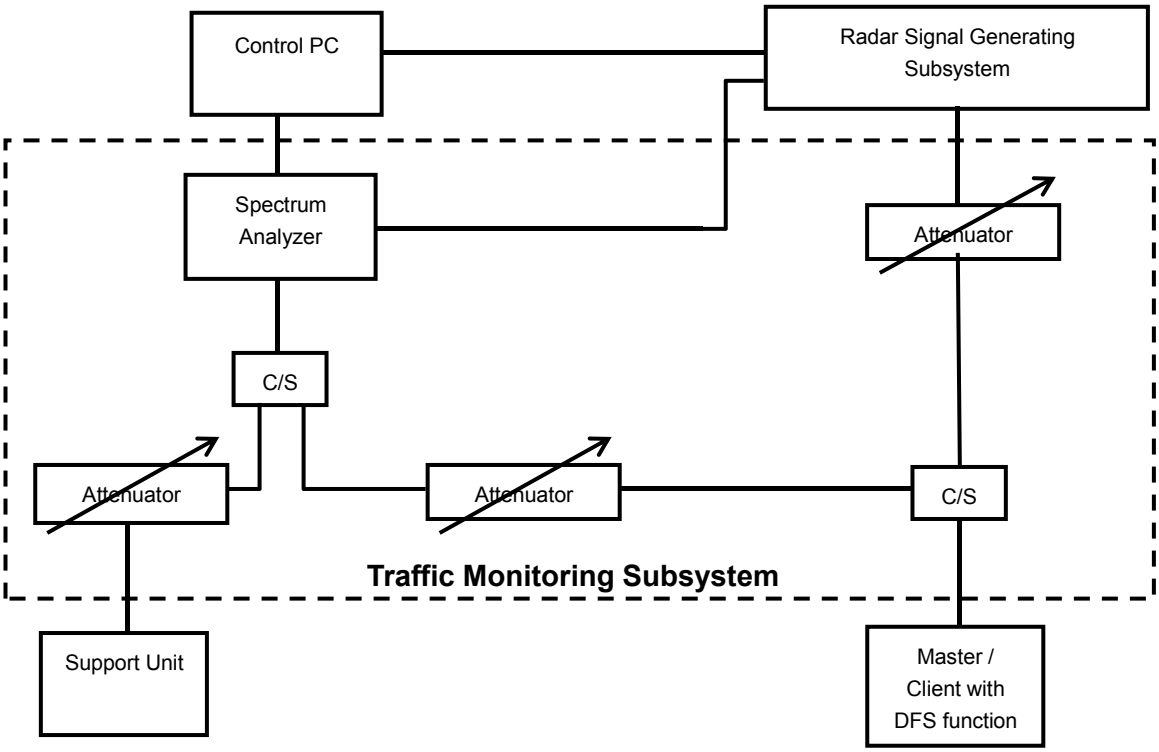

The test transmission will always be from the Master Device to the Client Device. While the Client device is set up to associate with the Master device and play the MPEG file (6 $\frac{1}{2}$ Magic Hours) from Master device, the designated MPEG test file and instructions are located at: http://ntiacsd.ntia.doc.gov/dfs/.

CALIBRATION OF DFS DETECTION THRESHOLD LEVEL:

The measured channel is 5500 MHz in 20MHz Bandwidth and 5530MHz in 80MHz Bandwidth. The radar signal was the same as transmitted channels, and injected into the antenna port of AP (master) or Client Device with Radar Detection, measured the channel closing transmission time and channel move time. The Master antenna gain is 6.57dBi and required detection threshold is-54.43dBm (= -62 +1 +6.57)dBm. The calibrated conducted detection threshold level is set to -54.43 dBm.

Conducted setup configuration of Calibration of DFS Detection Threshold Level

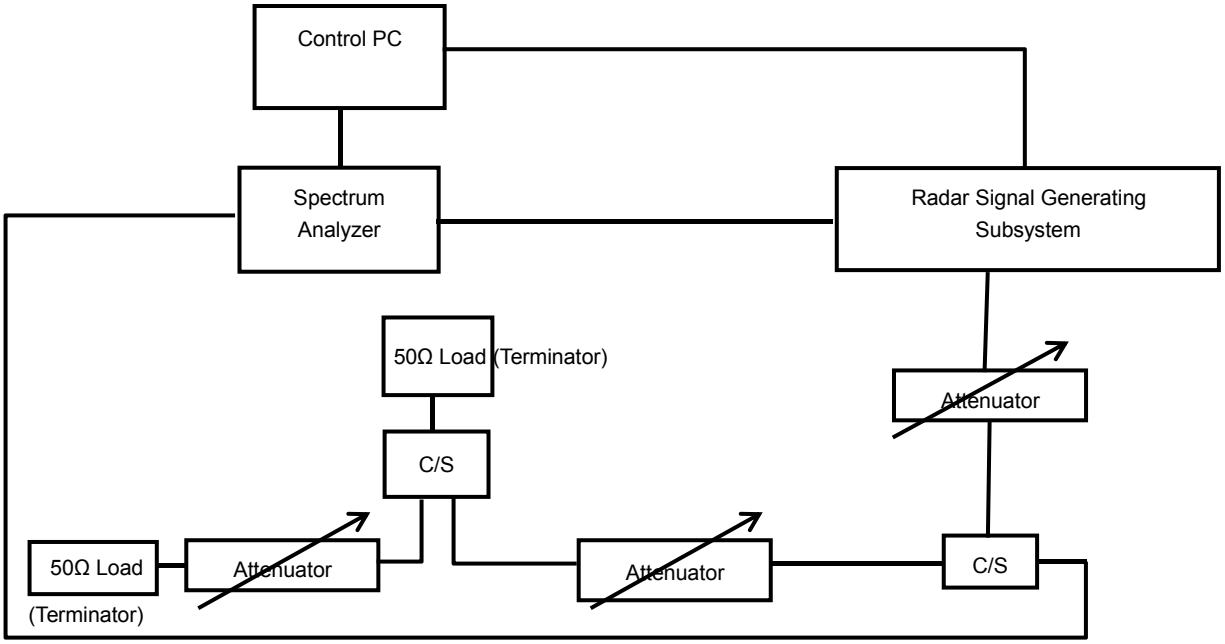

Radar Waveform Calibration Result

Radar Type 0 Calibration Plot (5290MHz)

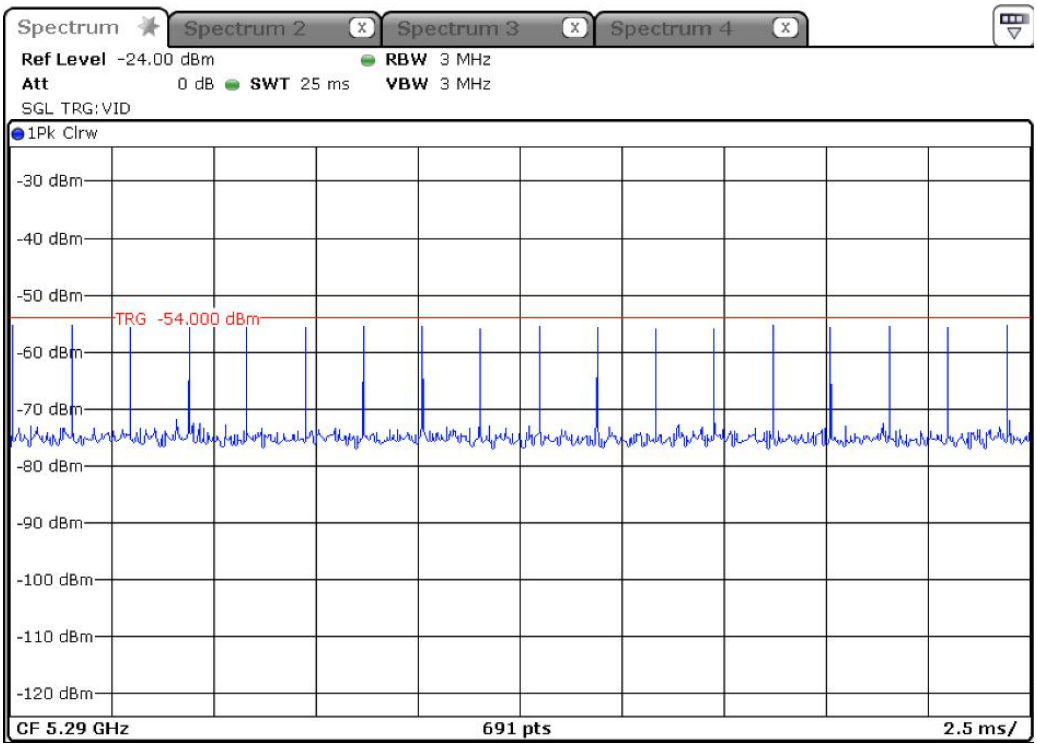

Radar Type 1 test A Calibration Plot (5290MHz)

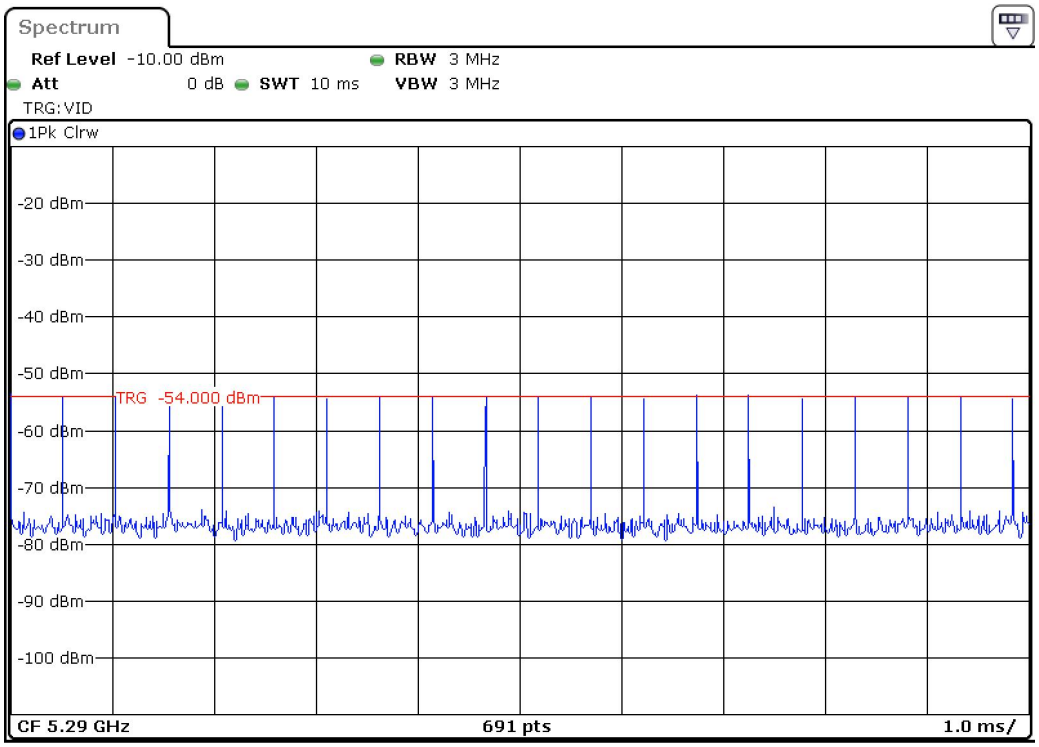

Radar Type 1 test B Calibration Plot (5290MHz)

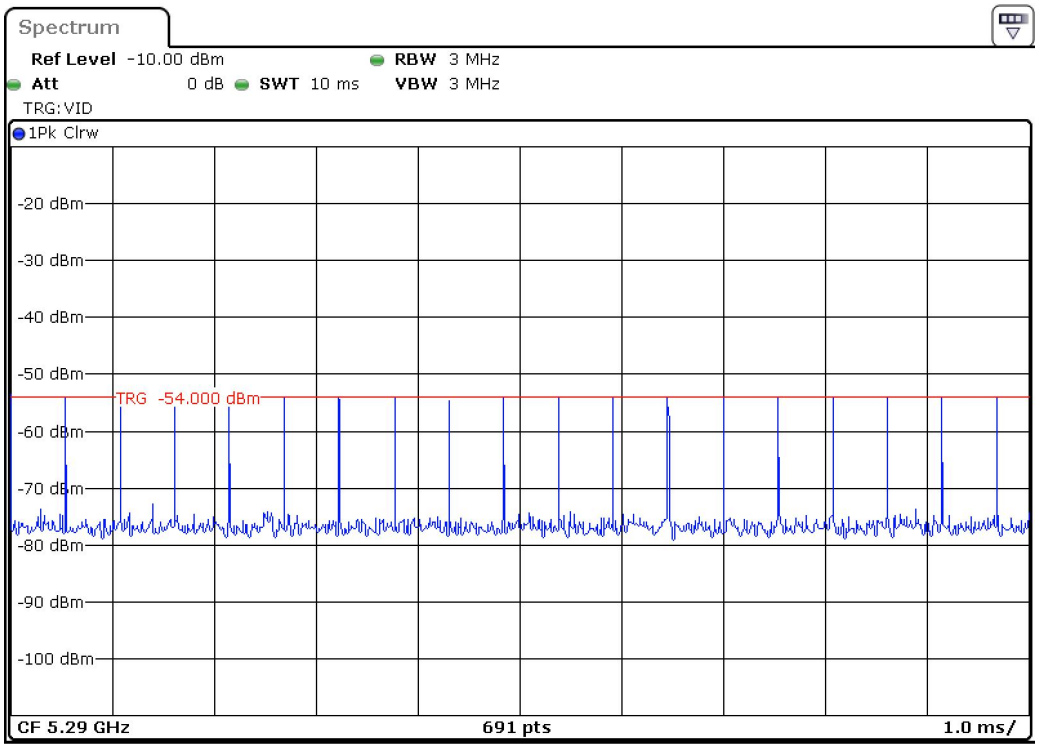

Radar Type 2 Calibration Plot (5290MHz)

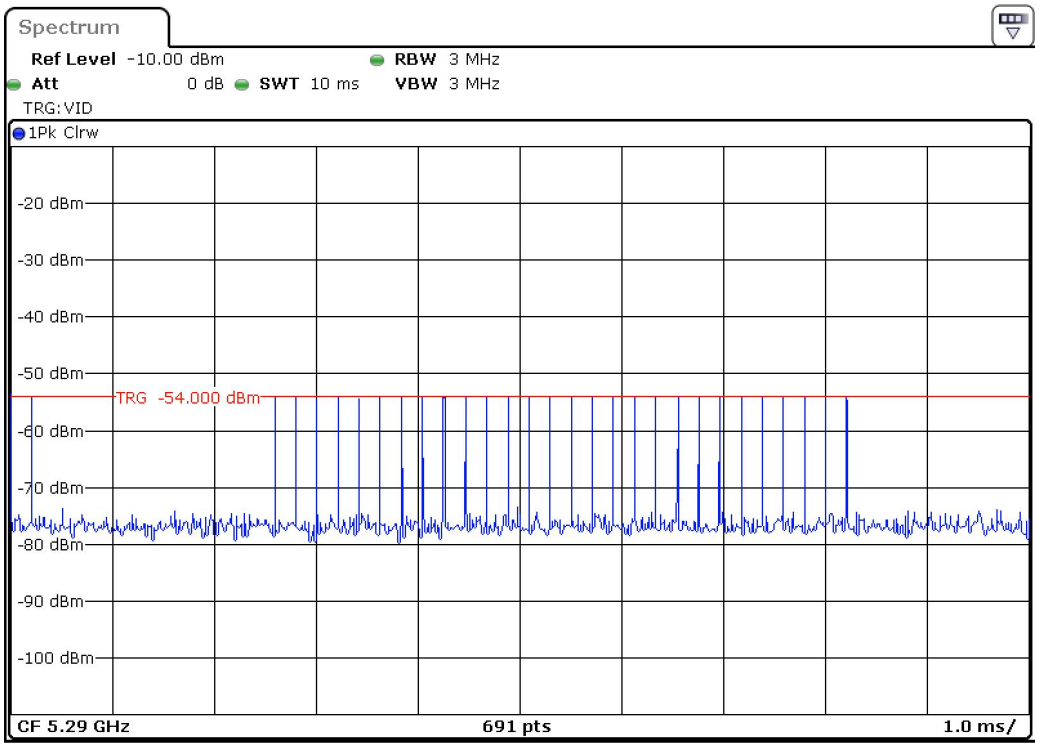

Radar Type 3 Calibration Plot (5290MHz)

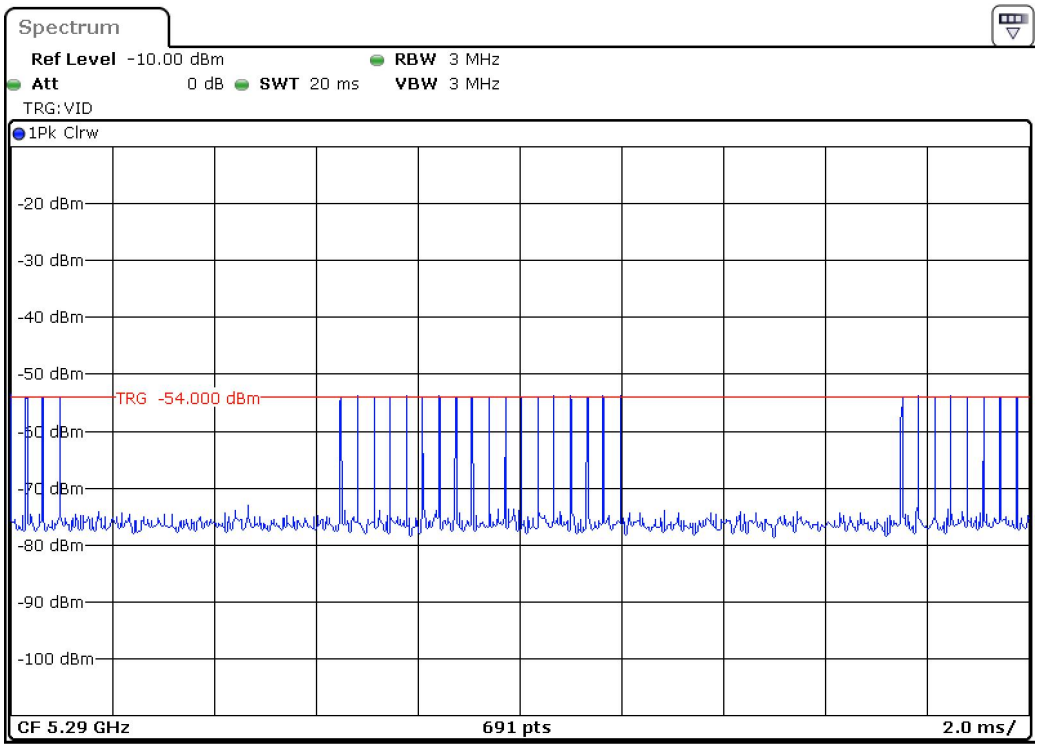

Radar Type 4 Calibration Plot (5290MHz)

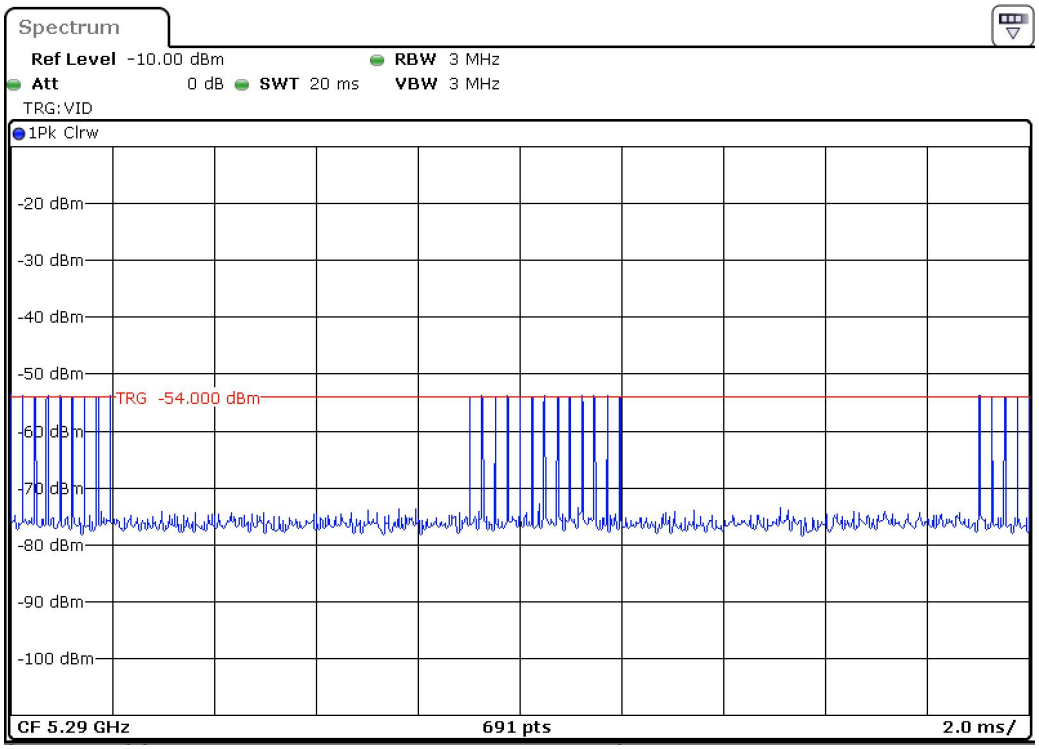

Radar Type 5 Calibration Plot (5290MHz)

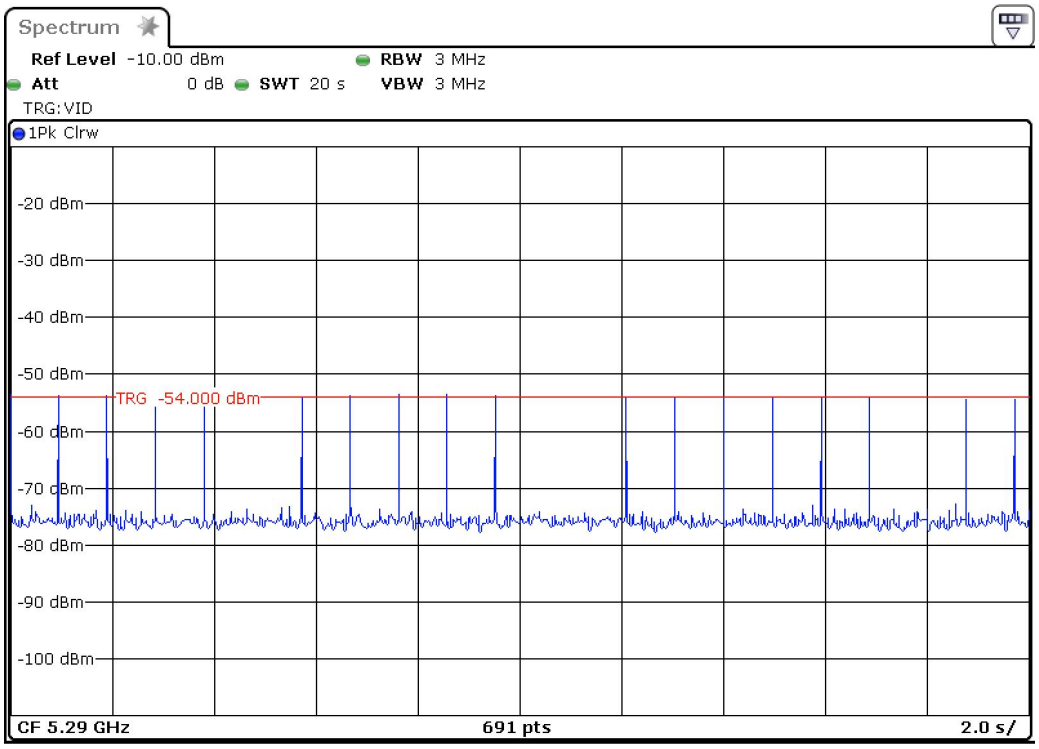

Radar Type 6 Calibration Plot (5290MHz)

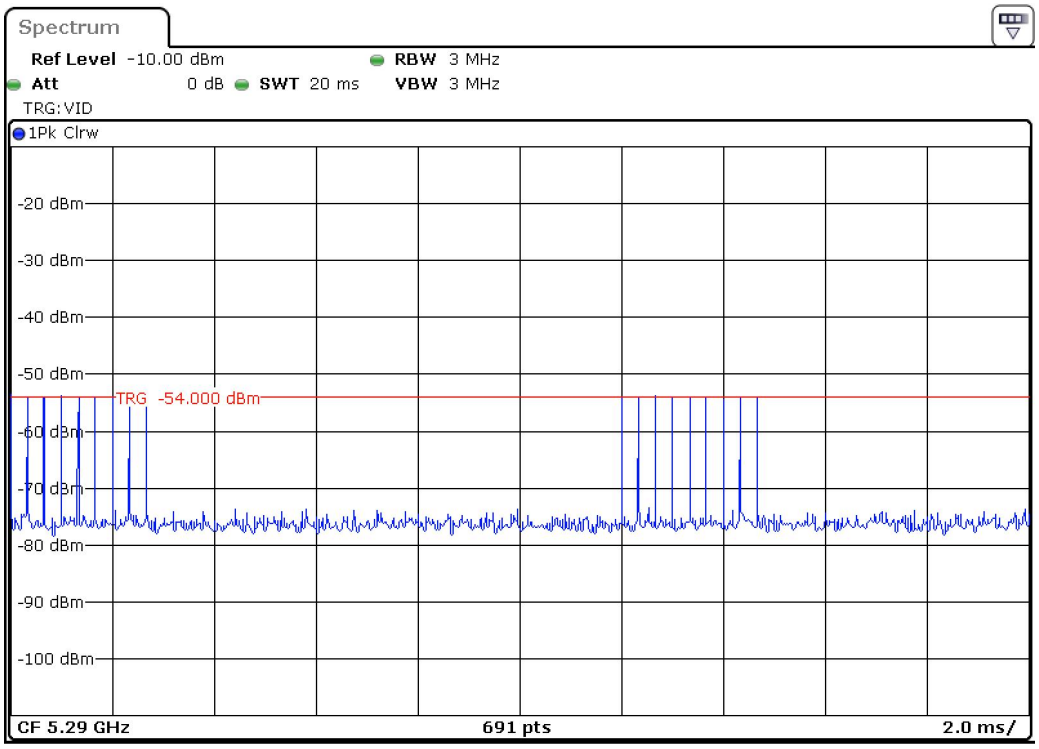

5.1.2.3 Test Result

Please refer to ANNEX A

ANNEX A TEST RESULT

A.1 CHANNEL CLOSING TRANSMISSION AND CHANNEL MOVE TIME

Note: The CHANNEL CLOSING TRANSMISSION AND CHANNEL MOVE TIME please refer to the Report No. 170524-01.TR06 (FCC ID: PD99260NG) (ISED ID: 1000M-9260NG) (which issued by Intel Mobile Communications France S.A.S – WRF Lab on Jul. 17, 2017), **Section B.2 TEST RESULTS FOR DYNAMIC FREQUENCY SELECTION (DFS).**

A.2 NON- OCCUPANCY PERIOD

Note: The NON- OCCUPANCY PERIOD please refer to the Report No. 170524-01.TR06 (FCC ID: PD99260NG) (ISED ID: 1000M-9260NG) (which issued by Intel Mobile Communications France S.A.S – WRF Lab on Jul. 17, 2017), **Section B.2 TEST RESULTS FOR DYNAMIC FREQUENCY SELECTION (DFS).**

ANNEX B TEST SETUP PHOTOS

Please refer the document “BL-EC1980077-AR.PDF”.

ANNEX C EUT EXTERNAL PHOTOS

Please refer the document “BL-EC1980077-AW.PDF”.

ANNEX D EUT INTERNAL PHOTOS

Please refer the document “BL-EC1980077-AI.PDF”.

--END OF REPORT--