FCC SAR Test Report

APPLICANT	:	Advantech Co., Ltd.
EQUIPMENT	:	Wireless Modules
BRAND NAME	:	Sierra
MODEL NAME	:	MC7355
FCC ID	:	M82-TPC130WL
STANDARD	:	FCC 47 CFR Part 2 (2.1093) ANSI/IEEE C95.1-1992 IEEE 1528-2003

The product was installed into Computer (Brand Name Advantech, Model Name: PWS-870, PWS-870XXXXXXXXXXXXXXXXXXXX (where "X" may be any alphanumeric character, "-" or blank.), FCC ID: M82-TPC130) during test.

We, SPORTON INTERNATIONAL INC., would like to declare that the tested sample has been evaluated in accordance with the procedures and had been in compliance with the applicable technical standards.

The test results in this report apply exclusively to the tested model / sample. Without written approval of SPORTON INTERNATIONAL INC., the test report shall not be reproduced except in full.

Reviewed by: Eric Huang / Deputy Manager

Approved by: Jones Tsai / Manager

Testing Laboratory
1190

SPORTON INTERNATIONAL INC.
No.52, Hwa Ya 1st Rd., Hwa Ya Technology Park, Kwei-Shan District, Taoyuan City, Taiwan (R.O.C.)

Table of Contents

1. Statement of Compliance **4**
2. Administration Data **5**
3. Guidance Standard **5**
4. Equipment Under Test (EUT) **6**
4.1 General Information 6
4.2 Maximum Tune-up Limit 7
4.3 General LTE SAR Test and Reporting Considerations 10
5. Proximity Sensor Triggering Test **12**
6. RF Exposure Limits **14**
6.1 Uncontrolled Environment 14
6.2 Controlled Environment 14
7. Specific Absorption Rate (SAR) **15**
7.1 Introduction 15
7.2 SAR Definition 15
8. System Description and Setup **16**
9. Measurement Procedures **17**
9.1 Spatial Peak SAR Evaluation 17
9.2 Power Reference Measurement 18
9.3 Area Scan 18
9.4 Zoom Scan 19
9.5 Volume Scan Procedures 19
9.6 Power Drift Monitoring 19
10. Test Equipment List **20**
11. System Verification **21**
11.1 Tissue Verification 21
11.2 System Performance Check Results 22
12. RF Exposure Positions **23**
12.1 SAR Testing for Tablet 23
13. Conducted RF Output Power (Unit: dBm) **23**
14. Antenna Location **48**
15. SAR Test Results **50**
15.1 Body SAR 51
15.2 Repeated SAR Measurement 54
16. Uncertainty Assessment **55**
17. References **58**
Appendix A. Plots of System Performance Check
Appendix B. Plots of High SAR Measurement
Appendix C. DASY Calibration Certificate
Appendix D. Test Setup Photos

Revision History

REPORT NO.	VERSION	DESCRIPTION	ISSUED DATE
FA470433-02	Rev. 01	Initial issue of report	May 08, 2015

1. Statement of Compliance

The maximum results of Specific Absorption Rate (SAR) found during testing for **Advantech Co., Ltd., Wireless Modules, MC7355**, are as follows.

Equipment Class	Frequency Band	Highest SAR Summary Body 1g SAR (W/kg)
PCB	GSM850	**1.20**
	GSM1900	1.19
	WCDMA Band V	0.92
	WCDMA Band IV	1.18
	WCDMA Band II	1.19
	CDMA 2000 BC10	1.19
	CDMA 2000 BC0	1.15
	CDMA 2000 BC1	1.19
	LTE Band 17	1.11
	LTE Band 13	1.18
	LTE Band 5	1.07
	LTE Band 4	1.10
	LTE Band 2	1.00
	LTE Band 25	0.98
Date of Testing:		2014/11/03~2014/11/08

This device is in compliance with Specific Absorption Rate (SAR) for general population/uncontrolled exposure limits (1.6 W/kg) specified in FCC 47 CFR part 2 (2.1093) and ANSI/IEEE C95.1-1992, and had been tested in accordance with the measurement methods and procedures specified in IEEE 1528-2003.

2. Administration Data

Testing Laboratory	
Test Site	SPORTON INTERNATIONAL INC.
Test Site Location	No.52, Hwa Ya 1st Rd., Hwa Ya Technology Park, Kwei-Shan District, Taoyuan City, Taiwan (R.O.C.) TEL: +886-3-327-3456 FAX: +886-3-328-4978

Applicant	
Company Name	Advantech Co., Ltd.
Address	No.1, Alley 20, Lane 26, Rueiguang Rd., Neihu District,Taipei City, Taiwan, R.O.C.

Manufacturer	
Company Name	Sierra Wireless Inc.
Address	13811, Wireless Way, Richmond, British, Columbia Canada

3. Guidance Standard

The Specific Absorption Rate (SAR) testing specification, method, and procedure for this device is in accordance with the following standards:

- FCC 47 CFR Part 2 (2.1093)
- ANSI/IEEE C95.1-1992
- IEEE 1528-2003
- FCC KDB 865664 D01 SAR Measurement 100 MHz to 6 GHz v01r03
- FCC KDB 865664 D02 SAR Reporting v01r01
- FCC KDB 447498 D01 General RF Exposure Guidance v05r02
- FCC KDB 248227 D01 SAR meas for 802 11abg v01r02
- FCC KDB 616217 D04 SAR for laptop and tablets v01r01
- FCC KDB 941225 D01 3G SAR Procedures v03
- FCC KDB 941225 D05 SAR for LTE Devices v02r03

4. Equipment Under Test (EUT)

4.1 General Information

Product Feature & Specification	
Equipment Name	Wireless Modules
Brand Name	Sierra
Model Name	MC7355
FCC ID	M82-TPC130WL
IMEI Code	356195050179934
Wireless Technology and Frequency Range	GSM850: 824.2 MHz ~ 848.8 MHz GSM1900: 1850.2 MHz ~ 1909.8 MHz WCDMA Band V: 826.4 MHz ~ 846.6 MHz WCDMA Band IV: 1712.4 MHz ~ 1752.6 MHz WCDMA Band II: 1852.4 MHz ~ 1907.6 MHz CDMA2000 BC0: 824.7 MHz ~ 848.31 MHz CDMA 2000 BC10: 817.9 MHz ~ 823.1 MHz CDMA 2000 BC1: 1851.25 MHz ~ 1908.75 MHz LTE Band 17: 706.5 MHz ~ 713.5 MHz LTE Band 13: 779.5 MHz ~ 784.5 MHz LTE Band 5: 824.7 MHz ~ 848.3 MHz LTE Band 4: 1710.7 MHz ~ 1754.3 MHz LTE Band 2: 1850.7 MHz ~ 1909.3 MHz LTE Band 25: 1850.7 MHz ~ 1914.3 MHz
Mode	• GPRS/EGPRS • RMC 12.2Kbps • HSDPA • HSUPA • DC-HSDPA • CDMA2000: 1xRTT/1xEv-Do(Rev.0)/1xEv-Do(Rev.A) • LTE: QPSK, 16QAM
EUT Stage	Identical Prototype
Remark: 1. This device is also integrated into below host, and WWAN / WLAN both operations cannot transmit simultaneously at the same time on this host.	

Host Information	
Host Name	Computer
Brand Name	Advantech
Model Name	PWS-870,PWS-870XXXXXXXXXXXXXXXXXXXX (where "X" may be any alphanumeric character, "-" or blank.)
FCC ID	M82-TPC130
Integrated Module	Brand Name: Broadcom Model Name: BCM94352HMB
Wireless Technology	• 802.11a/b/g/n/ac HT20/HT40/VHT20/VHT40/VHT80 • Bluetooth v3.0+EDR，Bluetooth v4.0-LE • NFC
HW Version	A101-3
SW Version	V0.10

4.2 Maximum Tune-up Limit

Mode	Burst average power (dBm)			
	GSM 850		GSM 1900	
Output Power Status	Full Power Mode	Reduced Power mode	Full Power Mode	Reduced Power mode
GPRS/EDGE (GMSK, 1 Tx slot)	33.00	28.00	30.00	28.00
GPRS/EDGE (GMSK, 2 Tx slots)	33.00	27.50	30.00	28.00
EDGE (8PSK, 1 Tx slot)	28.00	28.00	27.00	27.00
EDGE (8PSK, 2 Tx slots)	28.00	26.00	27.00	27.00
EDGE (8PSK, 3 Tx slot)	26.20	25.20	25.20	25.20
EDGE (8PSK, 4 Tx slots)	25.00	24.00	24.00	24.00

Mode	Burst average power (dBm)					
	WCDMA Band V		WCDMA Band II		WCDMA Band VI	
Output Power Status	Full Power Mode	Reduced Power mode	Full Power Mode	Reduced Power mode	Full Power Mode	Reduced Power mode
RMC 12.2Kbps	24.00	21.50	24.00	21.00	24.00	20.50
HSDPA Subtest-1	24.00	21.50	24.00	21.00	24.00	20.50
DC-HSDPA Subtest-1	24.00	21.50	24.00	21.00	24.00	20.50
HSUPA Subtest-5	24.00	21.50	24.00	21.00	24.00	20.50

Mode	Burst average power (dBm)					
	CDMA BC1		CDMA BC0		CDMA BC10	
Output Power Status	Full Power Mode	Reduced Power mode	Full Power Mode	Reduced Power mode	Full Power Mode	Reduced Power mode
1xRTT RC1 SO55	24.50	21.00	24.50	21.00	24.50	21.50
1xRTT RC3 SO55	24.50	21.00	24.50	21.00	24.50	21.50
1xEV-DO Rev 0	24.50	21.00	24.50	21.00	24.50	21.50
1xEV-DO Rev A	24.50	21.00	24.50	21.00	24.50	21.50

LTE Band 17						
Modulation	BW (MHz)	RB size	Full Power Mode		Reduce Power Mode	
			MPR	Average Power (dBm)	MPR	Average Power (dBm)
QPSK	10	≤ 12	0	24.00	0	22.50
QPSK	10	> 12	1	23.00	0	22.50
16QAM	10	≤ 12	1	23.00	0	22.50
16QAM	10	> 12	2	22.00	0	22.50
QPSK	5	≤ 8	0	24.00	0	22.50
QPSK	5	> 8	1	23.00	0	22.50
16QAM	5	≤ 8	1	23.00	0	22.50
16QAM	5	> 8	2	22.00	0	22.50

LTE Band 13						
Modulation	BW (MHz)	RB size	Full Power Mode		Reduce Power Mode	
			MPR	Average Power (dBm)	MPR	Average Power (dBm)
QPSK	10	≤ 12	0	24.00	0	20.50
QPSK	10	> 12	1	23.00	0	20.50
16QAM	10	≤ 12	1	23.00	0	20.50
16QAM	10	> 12	2	22.00	0	20.50
QPSK	5	≤ 8	0	24.00	0	20.50
QPSK	5	> 8	1	23.00	0	20.50
16QAM	5	≤ 8	1	23.00	0	20.50
16QAM	5	> 8	2	22.00	0	20.50

LTE Band 5						
Modulation	BW (MHz)	RB size	Full Power Mode		Reduce Power Mode	
			MPR	Average Power (dBm)	MPR	Average Power (dBm)
QPSK	10	≤ 12	0	24.00	0	21.50
QPSK	10	> 12	1	23.00	0	21.50
16QAM	10	≤ 12	1	23.00	0	21.50
16QAM	10	> 12	2	22.00	0	21.50
QPSK	5	≤ 8	0	24.00	0	21.50
QPSK	5	> 8	1	23.00	0	21.50
16QAM	5	≤ 8	1	23.00	0	21.50
16QAM	5	> 8	2	22.00	0	21.50

LTE Band 4						
Modulation	BW (MHz)	RB size	Full Power Mode		Reduce Power Mode	
			MPR	Average Power (dBm)	MPR	Average Power (dBm)
QPSK	20	≤ 18	0	24.00	0	20.50
QPSK	20	> 18	1	23.00	0	20.50
16QAM	20	≤ 18	1	23.00	0	20.50
16QAM	20	> 18	2	22.00	0	20.50
QPSK	15	≤ 16	0	24.00	0	20.50
QPSK	15	> 16	1	23.00	0	20.50
16QAM	15	≤ 16	1	23.00	0	20.50
16QAM	15	> 16	2	22.00	0	20.50
QPSK	10	≤ 12	0	24.00	0	20.50
QPSK	10	> 12	1	23.00	0	20.50
16QAM	10	≤ 12	1	23.00	0	20.50
16QAM	10	> 12	2	22.00	0	20.50
QPSK	5	≤ 8	0	24.00	0	20.50
QPSK	5	> 8	1	23.00	0	20.50
16QAM	5	≤ 8	1	23.00	0	20.50
16QAM	5	> 8	2	22.00	0	20.50

LTE Band 2						
Modulation	BW (MHz)	RB size	Full Power Mode		Reduce Power Mode	
			MPR	Average Power (dBm)	MPR	Average Power (dBm)
QPSK	20	≤ 18	0	24.00	0	20.50
QPSK	20	> 18	1	23.00	0	20.50
16QAM	20	≤ 18	1	23.00	0	20.50
16QAM	20	> 18	2	22.00	0	20.50
QPSK	15	≤ 16	0	24.00	0	20.50
QPSK	15	> 16	1	23.00	0	20.50
16QAM	15	≤ 16	1	23.00	0	20.50
16QAM	15	> 16	2	22.00	0	20.50
QPSK	10	≤ 12	0	24.00	0	20.50
QPSK	10	> 12	1	23.00	0	20.50
16QAM	10	≤ 12	1	23.00	0	20.50
16QAM	10	> 12	2	22.00	0	20.50
QPSK	5	≤ 8	0	24.00	0	20.50
QPSK	5	> 8	1	23.00	0	20.50
16QAM	5	≤ 8	1	23.00	0	20.50
16QAM	5	> 8	2	22.00	0	20.50

LTE Band 25						
Modulation	BW (MHz)	RB size	Full Power Mode		Reduce Power Mode	
			MPR	Average Power (dBm)	MPR	Average Power (dBm)
QPSK	20	≤ 18	0	24.00	0	20.50
QPSK	20	> 18	1	23.00	0	20.50
16QAM	20	≤ 18	1	23.00	0	20.50
16QAM	20	> 18	2	22.00	0	20.50
QPSK	15	≤ 16	0	24.00	0	20.50
QPSK	15	> 16	1	23.00	0	20.50
16QAM	15	≤ 16	1	23.00	0	20.50
16QAM	15	> 16	2	22.00	0	20.50
QPSK	10	≤ 12	0	24.00	0	20.50
QPSK	10	> 12	1	23.00	0	20.50
16QAM	10	≤ 12	1	23.00	0	20.50
16QAM	10	> 12	2	22.00	0	20.50
QPSK	5	≤ 8	0	24.00	0	20.50
QPSK	5	> 8	1	23.00	0	20.50
16QAM	5	≤ 8	1	23.00	0	20.50
16QAM	5	> 8	2	22.00	0	20.50

4.3 General LTE SAR Test and Reporting Considerations

Summarized necessary items addressed in KDB 941225 D05 v02r03	
FCC ID	M82-TPC130WL
Equipment Name	Wireless Modules
Operating Frequency Range of each LTE transmission band	LTE Band 17: 706.5 MHz ~ 713.5 MHz LTE Band 13: 779.5 MHz ~ 784.5 MHz LTE Band 05: 824.7 MHz ~ 848.3 MHz LTE Band 04: 1710.7 MHz ~ 1754.3 MHz LTE Band 02: 1850.7 MHz ~ 1909.3 MHz LTE Band 25: 1850.7 MHz ~ 1914.3 MHz
Channel Bandwidth	LTE Band 17: 5MHz, 10MHz LTE Band 13: 5MHz, 10MHz LTE Band 05: 5MHz, 10MHz LTE Band 04: 5MHz, 10MHz, 15MHz, 20MHz LTE Band 02: 5MHz, 10MHz, 15MHz, 20MHz LTE Band 25: 5MHz, 10MHz, 15MHz, 20MHz
uplink modulations used	QPSK, and 16QAM
LTE Voice / Data requirements	Data only
LTE MPR permanently built-in by design	Table 6.2.3-1: Maximum Power Reduction (MPR) for Power Class 3

Modulation	Channel bandwidth / Transmission bandwidth (RB)						MPR (dB)
	1.4 MHz	3.0 MHz	5 MHz	10 MHz	15 MHz	20 MHz	
QPSK	> 5	> 4	> 8	> 12	> 16	> 18	≤ 1
16 QAM	≤ 5	≤ 4	≤ 8	≤ 12	≤ 16	≤ 18	≤ 1
16 QAM	> 5	> 4	> 8	> 12	> 16	> 18	≤ 2

LTE A-MPR	In the base station simulator configuration, Network Setting value is set to NS_01 to disable A-MPR during SAR testing and the LTE SAR tests was transmitting on all TTI frames (Maximum TTI)
Spectrum plots for RB configuration	A properly configured base station simulator was used for the SAR and power measurement; therefore, spectrum plots for each RB allocation and offset configuration are not included in the SAR report.
Power reduction applied to satisfy SAR compliance	Yes, proximity sensor.

Transmission (H, M, L) channel numbers and frequencies in each LTE band								
LTE Band 17								
	Bandwidth 5 MHz				Bandwidth 10 MHz			
	Channel #	Freq.(MHz)			Channel #	Freq. (MHz)		
L	23755	706.5			23780	709		
M	23790	710			23790	710		
H	23825	713.5			23800	711		
LTE Band 13								
	Bandwidth 5 MHz				Bandwidth 10 MHz			
	Channel #	Freq.(MHz)			Channel #	Freq.(MHz)		
L	23205	779.5						
M	23230	782			23230	782		
H	23255	784.5						
LTE Band 5								
	Bandwidth 5 MHz				Bandwidth 10 MHz			
	Ch. #	Freq. (MHz)			Ch. #	Freq. (MHz)		
L	20425	826.5			20450	829		
M	20525	836.5			20525	836.5		
H	20625	846.5			20600	844		
LTE Band 4								
	Bandwidth 5 MHz		Bandwidth 10 MHz		Bandwidth 15 MHz		Bandwidth 20 MHz	
	Ch. #	Freq. (MHz)	Ch. #	Freq. (MHz)	Ch. #	Freq. (MHz)	Ch. #	Freq. (MHz)
L	19975	1712.5	20000	1715	20025	1717.5	20050	1720
M	20175	1732.5	20175	1732.5	20175	1732.5	20175	1732.5
H	20375	1752.5	20350	1750	20325	1747.5	20300	1745
LTE Band 2								
	Bandwidth 5 MHz		Bandwidth 10 MHz		Bandwidth 15 MHz		Bandwidth 20 MHz	
	Ch. #	Freq. (MHz)	Ch. #	Freq. (MHz)	Ch. #	Freq. (MHz)	Ch. #	Freq. (MHz)
L	18625	1852.5	18650	1855	18675	1857.5	18700	1860
M	18900	1880	18900	1880	18900	1880	18900	1880
H	19175	1907.5	19150	1905	19125	1902.5	19100	1900
LTE Band 25								
	Bandwidth 5 MHz		Bandwidth 10 MHz		Bandwidth 15 MHz		Bandwidth 20 MHz	
	Ch. #	Freq. (MHz)	Ch. #	Freq. (MHz)	Ch. #	Freq. (MHz)	Ch. #	Freq. (MHz)
L	26065	1852.5	26090	1855	26115	1857.5	26140	1860
M	26340	1880	26340	1880	26340	1880	26340	1880
H	26665	1912.5	26640	1910	26615	1907.5	26590	1905

5. Proximity Sensor Triggering Test

Proximity sensor power reduction

Exposure Position / wireless mode	Bottom Face(1)	Edge 1(1)	Edge 2	Edge 3	Edge 4
GSM850 GPRS (GMSK 1 Tx slot) - CS1	5.0 dB	5.0 dB	0 dB	0 dB	0 dB
GSM850 GPRS (GMSK 2 Tx slot) - CS1	5.5 dB	5.5 dB			
GSM850 EDGE (8PSK 1 Tx slot) - MCS5	0.0 dB	0.0 dB			
GSM850 EDGE (8PSK 2 Tx slot) - MCS5	2.0 dB	2.0 dB			
GSM850 EDGE (8PSK 3 Tx slots) - MCS5	1.0 dB	1.0 dB			
GSM850 EDGE (8PSK 4 Tx slots) - MCS5	1.0 dB	1.0 dB			
GSM1900 GPRS (GMSK 1 Tx slot) - CS1	2.0 dB	2.0 dB			
GSM1900 GPRS (GMSK 2 Tx slot) - CS1	2.0 dB	2.0 dB			
GSM1900 EDGE (8PSK 1 Tx slot) - MCS5	0.0 dB	0.0 dB			
GSM1900 EDGE (8PSK 2 Tx slot) - MCS5	0.0 dB	0.0 dB			
GSM1900 EDGE (8PSK 3 Tx slots) - MCS5	0.0 dB	0.0 dB			
GSM1900 EDGE (8PSK 4 Tx slots) - MCS5	0.0 dB	0.0 dB			
WCDMA Band V	2.5 dB	2.5 dB			
WCDMA Band II	3.0 dB	3.0 dB			
WCDMA Band IV	3.5 dB	3.5 dB			
CDMA2000 BC10	3.0 dB	3.0 dB			
CDMA2000 BC0	3.5 dB	3.5 dB			
CDMA2000 BC1	3.5 dB	3.5 dB			
LTE Band 13	3.5 dB	3.5 dB			
LTE Band 17	1.5 dB	1.5 dB			
LTE Band 5	2.5 dB	2.5 dB			
LTE Band 4	3.5 dB	3.5 dB			
LTE Band 2	3.5 dB	3.5 dB			
LTE Band 25	3.5 dB	3.5 dB			

Remark:

1. (1): Reduced maximum limit applied by activation of proximity sensor.
2. Power reduction is not applicable for WLAN and Bluetooth.
3. Tests were performed in accordance with KDB 616217 D04 section 6.1, 6.2, 6.3, 6.4 and 6.5 and compliant results are shown and described in exhibit “P-Sensor operational description
4. For verification of compliance of power reduction scheme, additional SAR testing with EUT transmitting at full RF power at a conservative trigger distance was performed:
   - Bottom Face: 12 mm
   - Edge1: 5 mm

Power Measurement during Sensor Trigger distance testing

Band/Mode	Ch #	Measured power reduction (dBm)		Reduction Levels
		w/o power back-off	w/ power back-off	(dB)
GSM850 GPRS (GMSK 2 Tx slot)	189	32.13	27.34	4.79
GSM1900 GPRS (GMSK 2 Tx slot)	661	29.98	27.04	2.94
WCDMA Band V	4182	23.64	20.42	3.22
WCDMA Band IV	1413	22.78	19.76	3.02
WCDMA Band II	9400	22.77	20.00	2.77
EVDO BC10	580	23.21	21.25	1.96
EVDO BC0	1013	23.35	20.59	2.76
EVDO BC1	25	23.94	20.63	3.31
LTE Band 17	23790	22.43	21.60	0.83
LTE Band 13	23230	22.33	20.27	2.06
LTE Band 5	20525	23.11	21.09	2.02
LTE Band 4	20050	22.58	19.60	2.98
LTE Band 2	18700	22.64	19.61	3.03
LTE Band 25	26140	22.54	19.59	2.95

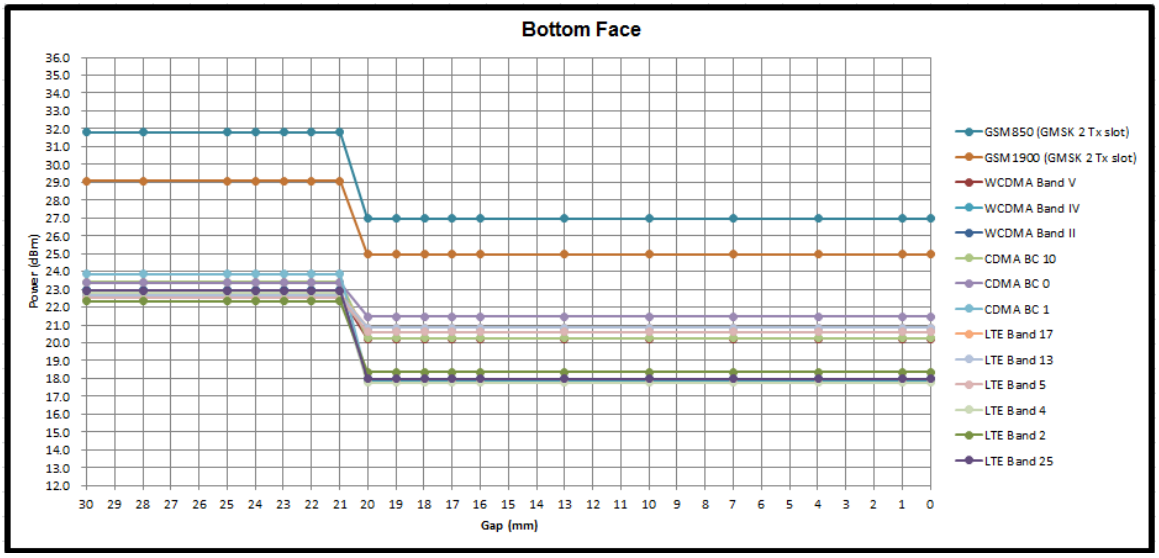

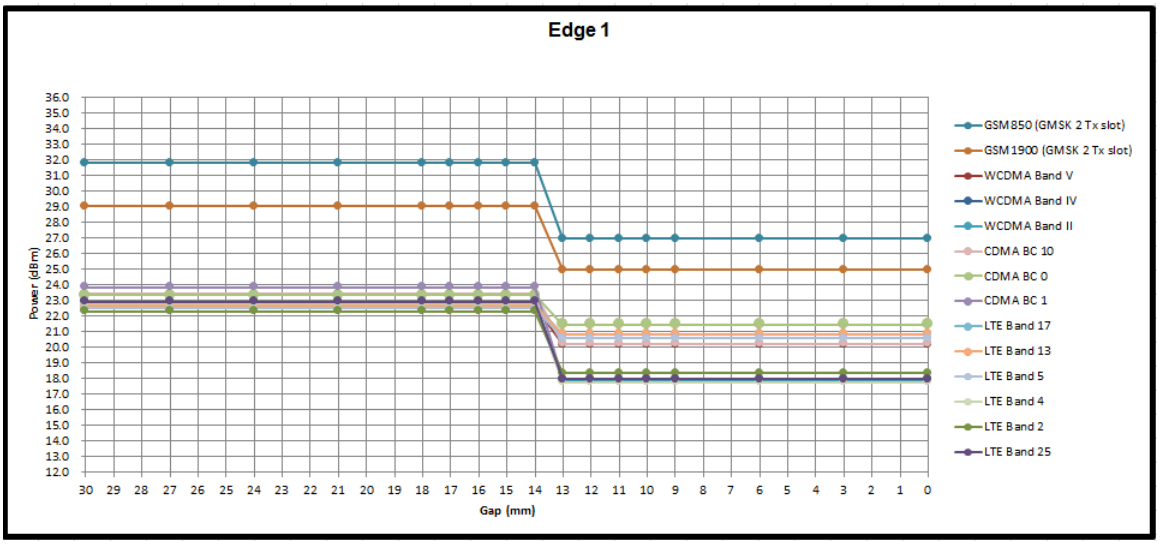

6. RF Exposure Limits

6.1 Uncontrolled Environment

Uncontrolled Environments are defined as locations where there is the exposure of individuals who have no knowledge or control of their exposure. The general population/uncontrolled exposure limits are applicable to situations in which the general public may be exposed or in which persons who are exposed as a consequence of their employment may not be made fully aware of the potential for exposure or cannot exercise control over their exposure. Members of the general public would come under this category when exposure is not employment-related; for example, in the case of a wireless transmitter that exposes persons in its vicinity.

6.2 Controlled Environment

Controlled Environments are defined as locations where there is exposure that may be incurred by persons who are aware of the potential for exposure, (i.e. as a result of employment or occupation). In general, occupational/controlled exposure limits are applicable to situations in which persons are exposed as a consequence of their employment, who have been made fully aware of the potential for exposure and can exercise control over their exposure. The exposure category is also applicable when the exposure is of a transient nature due to incidental passage through a location where the exposure levels may be higher than the general population/uncontrolled limits, but the exposed person is fully aware of the potential for exposure and can exercise control over his or her exposure by leaving the area or by some other appropriate means.

Limits for Occupational/Controlled Exposure (W/kg)

Whole-Body	Partial-Body	Hands, Wrists, Feet and Ankles
0.4	8.0	20.0

Limits for General Population/Uncontrolled Exposure (W/kg)

Whole-Body	Partial-Body	Hands, Wrists, Feet and Ankles
0.08	1.6	4.0

1. Whole-Body SAR is averaged over the entire body, partial-body SAR is averaged over any 1gram of tissue defined as a tissue volume in the shape of a cube. SAR for hands, wrists, feet and ankles is averaged over any 10 grams of tissue defined as a tissue volume in the shape of a cube.

7. Specific Absorption Rate (SAR)

7.1 Introduction

SAR is related to the rate at which energy is absorbed per unit mass in an object exposed to a radio field. The SAR distribution in a biological body is complicated and is usually carried out by experimental techniques or numerical modeling. The standard recommends limits for two tiers of groups, occupational/controlled and general population/uncontrolled, based on a person's awareness and ability to exercise control over his or her exposure. In general, occupational/controlled exposure limits are higher than the limits for general population/uncontrolled.

7.2 SAR Definition

The SAR definition is the time derivative (rate) of the incremental energy (dW) absorbed by (dissipated in) an incremental mass (dm) contained in a volume element (dv) of a given density (ρ). The equation description is as below:

$$\mathbf{SAR} = \frac{\mathbf{d}}{\mathbf{dt}}\left(\frac{\mathbf{dW}}{\mathbf{dm}}\right) = \frac{\mathbf{d}}{\mathbf{dt}}\left(\frac{\mathbf{dW}}{\boldsymbol{\rho}\mathbf{dv}}\right)$$

SAR is expressed in units of Watts per kilogram (W/kg)

$$\mathbf{SAR} = \frac{\boldsymbol{\sigma}|\mathbf{E}|^2}{\boldsymbol{\rho}}$$

Where: σ is the conductivity of the tissue, ρ is the mass density of the tissue and E is the RMS electrical field strength.

8. System Description and Setup

The DASY system used for performing compliance tests consists of the following items:

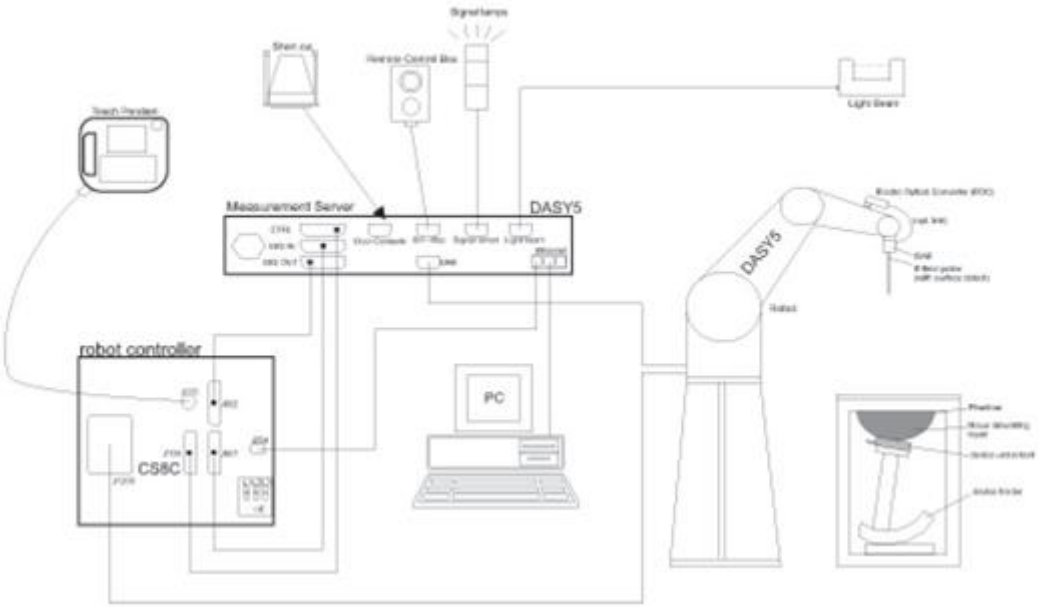

- A standard high precision 6-axis robot with controller, teach pendant and software. An arm extension for accommodating the data acquisition electronics (DAE).
- An isotropic Field probe optimized and calibrated for the targeted measurement.
- A data acquisition electronics (DAE) which performs the signal amplification, signal multiplexing, AD-conversion, offset measurements, mechanical surface detection, collision detection, etc. The unit is battery powered with standard or rechargeable batteries. The signal is optically transmitted to the EOC.
- The Electro-optical converter (EOC) performs the conversion from optical to electrical signals for the digital communication to the DAE. To use optical surface detection, a special version of the EOC is required. The EOC signal is transmitted to the measurement server.
- The function of the measurement server is to perform the time critical tasks such as signal filtering, control of the robot operation and fast movement interrupts.
- The Light Beam used is for probe alignment. This improves the (absolute) accuracy of the probe positioning.
- A computer running WinXP or Win7 and the DASY5 software.
- Remote control and teach pendant as well as additional circuitry for robot safety such as warning lamps, etc.
- The phantom, the device holder and other accessories according to the targeted measurement.

9. Measurement Procedures

The measurement procedures are as follows:

<Conducted power measurement>

(a) For WWAN power measurement, use base station simulator to configure EUT WWAN transmission in conducted connection with RF cable, at maximum power in each supported wireless interface and frequency band.
(b) Read the WWAN RF power level from the base station simulator.
(c) For WLAN/BT power measurement, use engineering software to configure EUT WLAN/BT continuously transmission, at maximum RF power in each supported wireless interface and frequency band
(d) Connect EUT RF port through RF cable to the power meter, and measure WLAN/BT output power

<SAR measurement>

(a) Use base station simulator to configure EUT WWAN transmission in radiated connection, and engineering software to configure EUT WLAN/BT continuously transmission, at maximum RF power, in the highest power channel.
(b) Place the EUT in the positions as Appendix D demonstrates.
(c) Set scan area, grid size and other setting on the DASY software.
(d) Measure SAR results for the highest power channel on each testing position.
(e) Find out the largest SAR result on these testing positions of each band
(f) Measure SAR results for other channels in worst SAR testing position if the reported SAR of highest power channel is larger than 0.8 W/kg

According to the test standard, the recommended procedure for assessing the peak spatial-average SAR value consists of the following steps:

(a) Power reference measurement
(b) Area scan
(c) Zoom scan
(d) Power drift measurement

9.1 Spatial Peak SAR Evaluation

The procedure for spatial peak SAR evaluation has been implemented according to the test standard. It can be conducted for 1g and 10g, as well as for user-specific masses. The DASY software includes all numerical procedures necessary to evaluate the spatial peak SAR value.

The base for the evaluation is a "cube" measurement. The measured volume must include the 1g and 10g cubes with the highest averaged SAR values. For that purpose, the center of the measured volume is aligned to the interpolated peak SAR value of a previously performed area scan.

The entire evaluation of the spatial peak values is performed within the post-processing engine (SEMCAD). The system always gives the maximum values for the 1g and 10g cubes. The algorithm to find the cube with highest averaged SAR is divided into the following stages:

(a) Extraction of the measured data (grid and values) from the Zoom Scan
(b) Calculation of the SAR value at every measurement point based on all stored data (A/D values and measurement parameters)
(c) Generation of a high-resolution mesh within the measured volume
(d) Interpolation of all measured values form the measurement grid to the high-resolution grid
(e) Extrapolation of the entire 3-D field distribution to the phantom surface over the distance from sensor to surface
(f) Calculation of the averaged SAR within masses of 1g and 10g

9.2 Power Reference Measurement

The Power Reference Measurement and Power Drift Measurements are for monitoring the power drift of the device under test in the batch process. The minimum distance of probe sensors to surface determines the closest measurement point to phantom surface. This distance cannot be smaller than the distance of sensor calibration points to probe tip as defined in the probe properties.

9.3 Area Scan

The area scan is used as a fast scan in two dimensions to find the area of high field values, before doing a fine measurement around the hot spot. The sophisticated interpolation routines implemented in DASY software can find the maximum found in the scanned area, within a range of the global maximum. The range (in dB0 is specified in the standards for compliance testing. For example, a 2 dB range is required in IEEE standard 1528 and IEC 62209 standards, whereby 3 dB is a requirement when compliance is assessed in accordance with the ARIB standard (Japan), if only one zoom scan follows the area scan, then only the absolute maximum will be taken as reference. For cases where multiple maximums are detected, the number of zoom scans has to be increased accordingly.

Area scan parameters extracted from FCC KDB 865664 D01v01r03 SAR measurement 100 MHz to 6 GHz.

	≤ 3 GHz	> 3 GHz
Maximum distance from closest measurement point (geometric center of probe sensors) to phantom surface	5 ± 1 mm	½·δ·ln(2) ± 0.5 mm
Maximum probe angle from probe axis to phantom surface normal at the measurement location	30° ± 1°	20° ± 1°
Maximum area scan spatial resolution: Δx_{Area}, Δy_{Area}	≤ 2 GHz: ≤ 15 mm 2 – 3 GHz: ≤ 12 mm	3 – 4 GHz: ≤ 12 mm 4 – 6 GHz: ≤ 10 mm
	When the x or y dimension of the test device, in the measurement plane orientation, is smaller than the above, the measurement resolution must be ≤ the corresponding x or y dimension of the test device with at least one measurement point on the test device.	

9.4 Zoom Scan

Zoom scans are used assess the peak spatial SAR values within a cubic averaging volume containing 1 gram and 10 gram of simulated tissue. The zoom scan measures points (refer to table below) within a cube shoes base faces are centered on the maxima found in a preceding area scan job within the same procedure. When the measurement is done, the zoom scan evaluates the averaged SAR for 1 gram and 10 gram and displays these values next to the job's label.

Zoom scan parameters extracted from FCC KDB 865664 D01v01r03 SAR measurement 100 MHz to 6 GHz.

			≤ 3 GHz	> 3 GHz
Maximum zoom scan spatial resolution: Δx_{Zoom}, Δy_{Zoom}			≤ 2 GHz: ≤ 8 mm 2 – 3 GHz: ≤ 5 mm*	3 – 4 GHz: ≤ 5 mm* 4 – 6 GHz: ≤ 4 mm*
Maximum zoom scan spatial resolution, normal to phantom surface	uniform grid: $\Delta z_{Zoom}(n)$		≤ 5 mm	3 – 4 GHz: ≤ 4 mm 4 – 5 GHz: ≤ 3 mm 5 – 6 GHz: ≤ 2 mm
	graded grid	$\Delta z_{Zoom}(1)$: between 1st two points closest to phantom surface	≤ 4 mm	3 – 4 GHz: ≤ 3 mm 4 – 5 GHz: ≤ 2.5 mm 5 – 6 GHz: ≤ 2 mm
		$\Delta z_{Zoom}(n>1)$: between subsequent points	$\leq 1.5 \cdot \Delta z_{Zoom}(n-1)$	
Minimum zoom scan volume	x, y, z		≥ 30 mm	3 – 4 GHz: ≥ 28 mm 4 – 5 GHz: ≥ 25 mm 5 – 6 GHz: ≥ 22 mm

Note: δ is the penetration depth of a plane-wave at normal incidence to the tissue medium; see draft standard IEEE P1528-2011 for details.

* When zoom scan is required and the *reported* SAR from the *area scan based 1-g SAR estimation* procedures of KDB 447498 is ≤ 1.4 W/kg, ≤ 8 mm, ≤ 7 mm and ≤ 5 mm zoom scan resolution may be applied, respectively, for 2 GHz to 3 GHz, 3 GHz to 4 GHz and 4 GHz to 6 GHz.

9.5 Volume Scan Procedures

The volume scan is used for assess overlapping SAR distributions for antennas transmitting in different frequency bands. It is equivalent to an oversized zoom scan used in standalone measurements. The measurement volume will be used to enclose all the simultaneous transmitting antennas. For antennas transmitting simultaneously in different frequency bands, the volume scan is measured separately in each frequency band. In order to sum correctly to compute the 1g aggregate SAR, the EUT remain in the same test position for all measurements and all volume scan use the same spatial resolution and grid spacing. When all volume scan were completed, the software, SEMCAD postprocessor can combine and subsequently superpose these measurement data to calculating the multiband SAR.

9.6 Power Drift Monitoring

All SAR testing is under the EUT install full charged battery and transmit maximum output power. In DASY measurement software, the power reference measurement and power drift measurement procedures are used for monitoring the power drift of EUT during SAR test. Both these procedures measure the field at a specified reference position before and after the SAR testing. The software will calculate the field difference in dB. If the power drifts more than 5%, the SAR will be retested.

10. Test Equipment List

Manufacturer	Name of Equipment	Type/Model	Serial Number	Calibration	
				Last Cal.	Due Date
SPEAG	750MHz System Validation Kit	D750V3	1078	Jun. 23, 2014	Jun. 22, 2015
SPEAG	835MHz System Validation Kit	D835V2	4d092	Jun. 23, 2014	Jun. 22, 2015
SPEAG	1750MHz System Validation Kit	D1750V2	1023	Jun. 17, 2014	Jun. 16, 2015
SPEAG	1900MHz System Validation Kit	D1900V2	5d018	Jun. 18, 2014	Jun. 17, 2015
SPEAG	Data Acquisition Electronics	DAE4	778	Aug. 21, 2014	Aug. 20, 2015
SPEAG	Dosimetric E-Field Probe	ES3DV3	3270	Sep. 26, 2014	Sep. 25, 2015
Wisewind	Thermometer	ETP-101	TM560	Oct. 21, 2014	Oct. 20, 2015
Anritsu	Radio Communication Analyzer	MT8820C	6201381760	May. 28, 2014	May. 27, 2015
Agilent	Wireless Communication Test Set	E5515C	MY50266977	May. 27, 2014	May. 26, 2015
SPEAG	Device Holder	N/A	N/A	NCR	NCR
R&S	Signal Generator	SMU200A	102502	Jul. 07, 2014	Jul. 06, 2015
SPEAG	Dielectric Probe Kit	DAKS-3.5	0004	Mar. 04, 2014	Mar. 03, 2015
Agilent	ENA Network Analyzer	E5071C	MY46101588	May. 31, 2014	May. 30, 2015
Anritsu	Power Meter	ML2495A	1036004	Aug. 09, 2014	Aug. 08, 2015
Anritsu	Power Sensor	MA2411B	1027253	Aug. 11, 2014	Aug. 10, 2015
R&S	Spectrum Analyzer	FSP 7	101131	Jul. 10, 2014	Jul. 09, 2015
Agilent	Dual Directional Coupler	778D	50422	Note1	
Woken	Attenuator 1	WK0602-XX	N/A	Note1	
PE	Attenuator 2	PE7005-10	N/A	Note1	
PE	Attenuator 3	PE7005- 3	N/A	Note1	
AR	Power Amplifier	5S1G4M2	0328767	Note1	
Mini-Circuits	Power Amplifier	ZVE-3W	162601250	Note1	
Mini-Circuits	Power Amplifier	ZHL-42W+	13440021344	Note1	

General Note:

1. Prior to system verification and validation, the path loss from the signal generator to the system check source and the power meter, which includes the amplifier, cable, attenuator and directional coupler, was measured by the network analyzer. The reading of the power meter was offset by the path loss difference between the path to the power meter and the path to the system check source to monitor the actual power level fed to the system check source.

11. System Verification

11.1 Tissue Verification

The following tissue formulations are provided for reference only as some of the parameters have not been thoroughly verified. The composition of ingredients may be modified accordingly to achieve the desired target tissue parameters required for routine SAR evaluation.

Frequency (MHz)	Water (%)	Sugar (%)	Cellulose (%)	Salt (%)	Preventol (%)	DGBE (%)	Conductivity (σ)	Permittivity (εr)
For Head								
750	41.1	57.0	0.2	1.4	0.2	0	0.89	41.9
835	40.3	57.9	0.2	1.4	0.2	0	0.90	41.5
900	40.3	57.9	0.2	1.4	0.2	0	0.97	41.5
1800, 1900, 2000	55.2	0	0	0.3	0	44.5	1.40	40.0
2450	55.0	0	0	0	0	45.0	1.80	39.2
2600	54.8	0	0	0.1	0	45.1	1.96	39.0
For Body								
750	51.7	47.2	0	0.9	0.1	0	0.96	55.5
835	50.8	48.2	0	0.9	0.1	0	0.97	55.2
900	50.8	48.2	0	0.9	0.1	0	1.05	55.0
1800, 1900, 2000	70.2	0	0	0.4	0	29.4	1.52	53.3
2450	68.6	0	0	0	0	31.4	1.95	52.7
2600	68.1	0	0	0.1	0	31.8	2.16	52.5

Simulating Liquid for 5GHz, Manufactured by SPEAG

Ingredients	(% by weight)
Water	64~78%
Mineral oil	11~18%
Emulsifiers	9~15%
Additives and Salt	2~3%

<Tissue Dielectric Parameter Check Results>

Frequency (MHz)	Tissue Type	Liquid Temp. (℃)	Conductivity (σ)	Permittivity (ε_r)	Conductivity Target (σ)	Permittivity Target (ε_r)	Delta (σ) (%)	Delta (ε_r) (%)	Limit (%)	Date
750	MSL	22.3	0.958	55.221	0.96	55.50	-0.21	-0.50	±5	2014/11/4
750	MSL	22.6	0.963	54.242	0.96	55.50	0.31	-2.27	±5	2014/11/8
835	MSL	22.5	0.972	53.016	0.97	55.20	0.21	-3.96	±5	2014/11/3
835	MSL	22.3	0.967	54.182	0.97	55.20	-0.31	-1.84	±5	2014/11/5
1750	MSL	22.2	1.552	51.004	1.49	53.40	4.16	-4.49	±5	2014/11/4
1750	MSL	22.4	1.541	51.611	1.49	53.40	3.42	-3.35	±5	2014/11/5
1900	MSL	22.2	1.532	53.849	1.52	53.30	0.79	1.03	±5	2014/11/4
1900	MSL	22.4	1.527	51.264	1.52	53.30	0.46	-3.82	±5	2014/11/7

11.2 System Performance Check Results

Comparing to the original SAR value provided by SPEAG, the verification data should be within its specification of 10 %. Below table shows the target SAR and measured SAR after normalized to 1W input power. The table below indicates the system performance check can meet the variation criterion and the plots can be referred to Appendix A of this report.

Date	Frequency (MHz)	Tissue Type	Input Power (mW)	Dipole S/N	Probe S/N	DAE S/N	Measured 1g SAR (W/kg)	Targeted 1g SAR (W/kg)	Normalized 1g SAR (W/kg)	Deviation (%)
2014/11/4	750	MSL	250	D750V3-1078	ES3DV3 - SN3270	DAE4 Sn778	2.23	8.63	8.92	3.36
2014/11/8	750	MSL	250	D750V3-1078	ES3DV3 - SN3270	DAE4 Sn778	2.14	8.63	8.56	-0.81
2014/11/3	835	MSL	250	D835V2-4d092	ES3DV3 - SN3270	DAE4 Sn778	2.46	9.47	9.84	3.91
2014/11/5	835	MSL	250	D835V2-4d092	ES3DV3 - SN3270	DAE4 Sn778	2.41	9.47	9.64	1.80
2014/11/4	1750	MSL	250	D1750V2-1023	ES3DV3 - SN3270	DAE4 Sn778	9.36	37.90	37.44	-1.21
2014/11/5	1750	MSL	250	D1750V2-1023	ES3DV3 - SN3270	DAE4 Sn778	9.09	37.90	36.36	-4.06
2014/11/4	1900	MSL	250	D1900V2-5d018	ES3DV3 - SN3270	DAE4 Sn778	9.78	39.80	39.12	-1.71
2014/11/7	1900	MSL	250	D1900V2-5d018	ES3DV3 - SN3270	DAE4 Sn778	9.44	39.80	37.76	-5.13

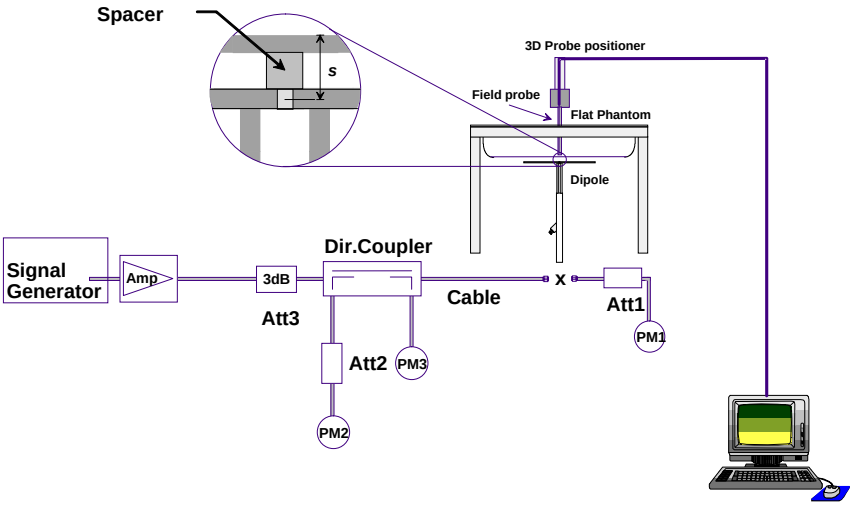

Fig 8.3.1 System Performance Check Setup

Fig 8.3.2 Setup Photo

12. RF Exposure Positions

12.1 SAR Testing for Tablet

This device can be used also in full sized tablet exposure conditions, due to its size. Per FCC KDB 616217, the back surface and edges of the tablet should be tested for SAR compliance with the tablet touching the phantom. The SAR exclusion threshold in KDB 447498 D01v05r02 can be applied to determine SAR test exclusion for adjacent edge configurations. The closest distance from the antenna to an adjacent tablet edge is used to determine if SAR testing is required for the adjacent edges, with the adjacent edge positioned against the phantom and the edge containing the antenna positioned perpendicular to the phantom.

13. Conducted RF Output Power (Unit: dBm)

<GSM Conducted Power>

General Note:

1. Per KDB 447498 D01v05r02, the maximum output power channel is used for SAR testing and for further SAR test reduction.
2. Per KDB 941225 D01v03, for Body SAR test reduction for GPRS and EDGE modes is determined by the source-based time-averaged output power including tune-up tolerance, for modes with the same specified maximum output power and tolerance, the higher number time-slot configuration should be tested, therefore, the GPRS 2Tx slots modes was selected when EUT operating without power back-off, the GPRS 2Tx slots modes was selected when EUT operating with power back-off, according to the highest source-based time-averaged output power.

Full Power Mode (Proximity Sensor Inactive)

Band GSM850	Burst Average Power (dBm)			Tune-up Limit (dBm)	Frame-Average Power (dBm)			Tune-up Limit (dBm)
TX Channel	128	189	251		128	189	251	
Frequency (MHz)	824.2	836.4	848.8		824.2	836.4	848.8	
GPRS (GMSK, 1 Tx slot)	32.38	32.31	32.26	33.00	23.38	23.31	23.26	24.00
GPRS (GMSK, 2 Tx slots)	32.13	32.09	32.07	33.00	26.13	26.09	26.07	27.00
EDGE (8PSK, 1 Tx slot)	26.72	26.71	26.67	28.00	17.72	17.71	17.67	19.00
EDGE (8PSK, 2 Tx slots)	26.47	26.50	26.49	28.00	20.47	20.50	20.49	22.00
EDGE (8PSK, 3 Tx slots)	26.19	26.12	26.11	26.20	21.93	21.86	21.85	21.94
EDGE (8PSK, 4 Tx slots)	24.77	24.85	24.91	25.00	21.77	21.85	21.91	22.00

Band GSM1900	Burst Average Power (dBm)			Tune-up Limit (dBm)	Frame-Average Power (dBm)			Tune-up Limit (dBm)
TX Channel	512	661	810		512	661	810	
Frequency (MHz)	1850.2	1880	1909.8		1850.2	1880	1909.8	
GPRS (GMSK, 1 Tx slot)	29.89	29.97	29.96	30.00	20.89	20.97	20.96	21.00
GPRS (GMSK, 2 Tx slots)	29.82	29.98	29.78	30.00	23.82	23.98	23.78	24.00
EDGE (8PSK, 1 Tx slot)	25.94	26.05	25.94	27.00	16.94	17.05	16.94	18.00
EDGE (8PSK, 2 Tx slots)	25.82	25.87	25.74	27.00	19.82	19.87	19.74	21.00
EDGE (8PSK, 3 Tx slots)	25.11	25.15	25.16	25.20	20.85	20.89	20.90	20.94
EDGE (8PSK, 4 Tx slots)	23.90	23.98	23.95	24.00	20.90	20.98	20.95	21.00

Reduced Power Mode (Proximity Sensor active)

Band GSM850	Burst Average Power (dBm)			Tune-up Limit (dBm)	Frame-Average Power (dBm)			Tune-up Limit (dBm)
TX Channel	128	189	251		128	189	251	
Frequency (MHz)	824.2	836.4	848.8		824.2	836.4	848.8	
GPRS (GMSK, 1 Tx slot)	27.90	27.97	27.93	28.00	18.90	18.97	18.93	19.00
GPRS (GMSK, 2 Tx slots)	27.34	27.41	27.25	27.50	21.34	21.41	21.25	21.50
EDGE (8PSK, 1 Tx slot)	26.72	26.71	26.67	28.00	17.72	17.71	17.67	19.00
EDGE (8PSK, 2 Tx slots)	24.75	24.77	24.76	26.00	18.75	18.77	18.76	20.00
EDGE (8PSK, 3 Tx slots)	24.53	24.59	24.58	25.20	20.27	20.33	20.32	20.94
EDGE (8PSK, 4 Tx slots)	23.81	23.90	23.82	24.00	20.81	20.90	20.82	21.00

Band GSM1900	Burst Average Power (dBm)			Tune-up Limit (dBm)	Frame-Average Power (dBm)			Tune-up Limit (dBm)
TX Channel	512	661	810		512	661	810	
Frequency (MHz)	1850.2	1880	1909.8		1850.2	1880	1909.8	
GPRS (GMSK, 1 Tx slot)	26.82	27.11	26.86	28.00	17.82	18.11	17.86	19.00
GPRS (GMSK, 2 Tx slots)	26.76	27.04	26.78	28.00	20.76	21.04	20.78	22.00
EDGE (8PSK, 1 Tx slot)	25.94	26.05	25.94	27.00	16.94	17.05	16.94	18.00
EDGE (8PSK, 2 Tx slots)	25.82	25.87	25.74	27.00	19.82	19.87	19.74	21.00
EDGE (8PSK, 3 Tx slots)	25.11	25.15	25.16	25.20	20.85	20.89	20.90	20.94
EDGE (8PSK, 4 Tx slots)	23.90	23.98	23.95	24.00	20.90	20.98	20.95	21.00

<WCDMA Conducted Power>

1. The following tests were conducted according to the test requirements outlines in 3GPP TS 34.121 specification.
2. The procedures in KDB 941225 D01 are applied for 3GPP Rel. 6 HSPA to configure the device in the required sub-test mode(s) to determine SAR test exclusion.
3. For DC-HSDPA, the device was configured according to the H-Set 12, Fixed Reference Channel (FRC) configuration in Table C.8.1.12 of 3GPP TS 34.121-1, with the primary and the secondary serving HS-DSCH Cell enabled during the power measurement.

A summary of these settings are illustrated below:

HSDPA Setup Configuration:

a. The EUT was connected to Base Station Agilent E5515C referred to the Setup Configuration.
b. The RF path losses were compensated into the measurements.
c. A call was established between EUT and Base Station with following setting:
   i. Set Gain Factors (β_c and β_d) and parameters were set according to each
   ii. Specific sub-test in the following table, C10.1.4, quoted from the TS 34.121
   iii. Set RMC 12.2Kbps + HSDPA mode.
   iv. Set Cell Power = -86 dBm
   v. Set HS-DSCH Configuration Type to FRC (H-set 1, QPSK)
   vi. Select HSDPA Uplink Parameters
   vii. Set Delta ACK, Delta NACK and Delta CQI = 8
   viii. Set Ack-Nack Repetition Factor to 3
   ix. Set CQI Feedback Cycle (k) to 4 ms
   x. Set CQI Repetition Factor to 2
   xi. Power Ctrl Mode = All Up bits
d. The transmitted maximum output power was recorded.

Table C.10.1.4: β values for transmitter characteristics tests with HS-DPCCH

Sub-test	β_c	β_d	β_d *(SF)*	β_c/β_d	β_{HS} *(Note1, Note 2)*	**CM** (dB) *(Note 3)*	**MPR** (dB) *(Note 3)*
1	2/15	15/15	64	2/15	4/15	0.0	0.0
2	12/15 *(Note 4)*	15/15 *(Note 4)*	64	12/15 *(Note 4)*	24/15	1.0	0.0
3	15/15	8/15	64	15/8	30/15	1.5	0.5
4	15/15	4/15	64	15/4	30/15	1.5	0.5

Note 1: Δ_{ACK}, Δ_{NACK} and Δ_{CQI} = 30/15 with β_{hs} = 30/15 * β_c .

Note 2: For the HS-DPCCH power mask requirement test in clause 5.2C, 5.7A, and the Error Vector Magnitude (EVM) with HS-DPCCH test in clause 5.13.1A, and HSDPA EVM with phase discontinuity in clause 5.13.1AA, Δ_{ACK} and Δ_{NACK} = 30/15 with β_{hs} = 30/15 * β_c , and Δ_{CQI} = 24/15 with β_{hs} = 24/15 * β_c .

Note 3: CM = 1 for β_c/β_d =12/15, β_{hs}/β_c=24/15. For all other combinations of DPDCH, DPCCH and HS-DPCCH the MPR is based on the relative CM difference. This is applicable for only UEs that support HSDPA in release 6 and later releases.

Note 4: For subtest 2 the β_c/β_d ratio of 12/15 for the TFC during the measurement period (TF1, TF0) is achieved by setting the signalled gain factors for the reference TFC (TF1, TF1) to β_c = 11/15 and β_d = 15/15.

Setup Configuration

HSUPA Setup Configuration:

a. The EUT was connected to Base Station Agilent E5515C referred to the Setup Configuration.
b. The RF path losses were compensated into the measurements.
c. A call was established between EUT and Base Station with following setting * :
   i. Call Configs = 5.2B, 5.9B, 5.10B, and 5.13.2B with QPSK
   ii. Set the Gain Factors (β_c and β_d) and parameters (AG Index) were set according to each specific sub-test in the following table, C11.1.3, quoted from the TS 34.121
   iii. Set Cell Power = -86 dBm
   iv. Set Channel Type = 12.2k + HSPA
   v. Set UE Target Power
   vi. Power Ctrl Mode= Alternating bits
   vii. Set and observe the E-TFCI
   viii. Confirm that E-TFCI is equal to the target E-TFCI of 75 for sub-test 1, and other subtest's E-TFCI
d. The transmitted maximum output power was recorded.

Table C.11.1.3: β values for transmitter characteristics tests with HS-DPCCH and E-DCH

Sub-test	β_c	β_d	β_d (SF)	β_c/β_d	β_{HS} (Note1)	β_{ec}	β_{ed} (Note 5) (Note 6)	β_{ed} (SF)	β_{ed} (Codes)	CM (dB) (Note 2)	MPR (dB) (Note 2)	AG Index (Note 6)	E-TFCI
1	11/15 (Note 3)	15/15 (Note 3)	64	11/15 (Note 3)	22/15	209/225	1309/225	4	1	1.0	0.0	20	75
2	6/15	15/15	64	6/15	12/15	12/15	94/75	4	1	3.0	2.0	12	67
3	15/15	9/15	64	15/9	30/15	30/15	β_{ed}1: 47/15 β_{ed}2: 47/15	4 4	2	2.0	1.0	15	92
4	2/15	15/15	64	2/15	4/15	2/15	56/75	4	1	3.0	2.0	17	71
5	15/15 (Note 4)	15/15 (Note 4)	64	15/15 (Note 4)	30/15	24/15	134/15	4	1	1.0	0.0	21	81

Note 1: Δ_{ACK}, Δ_{NACK} and Δ_{CQI} = 30/15 with β_{hs} = 30/15 * β_c .

Note 2: CM = 1 for β_c/β_d =12/15, β_{hs}/β_c=24/15. For all other combinations of DPDCH, DPCCH, HS- DPCCH, E-DPDCH and E-DPCCH the MPR is based on the relative CM difference.

Note 3: For subtest 1 the β_c/β_d ratio of 11/15 for the TFC during the measurement period (TF1, TF0) is achieved by setting the signalled gain factors for the reference TFC (TF1, TF1) to β_c = 10/15 and β_d = 15/15.

Note 4: For subtest 5 the β_c/β_d ratio of 15/15 for the TFC during the measurement period (TF1, TF0) is achieved by setting the signalled gain factors for the reference TFC (TF1, TF1) to β_c = 14/15 and β_d = 15/15.

Note 5: In case of testing by UE using E-DPDCH Physical Layer category 1, Sub-test 3 is omitted according to TS25.306 Table 5.1g.

Note 6: β_{ed} can not be set directly, it is set by Absolute Grant Value.

Setup Configuration

DC-HSDPA 3GPP release 8 Setup Configuration:

a. The EUT was connected to Base Station Agilent E5515C referred to the Setup Configuration below
b. The RF path losses were compensated into the measurements.
c. A call was established between EUT and Base Station with following setting:
   i. Set RMC 12.2Kbps + HSDPA mode.
   ii. Set Cell Power = -25 dBm
   iii. Set HS-DSCH Configuration Type to FRC (H-set 12, QPSK)
   iv. Select HSDPA Uplink Parameters
   v. Set Gain Factors (β_c and β_d) and parameters were set according to each Specific sub-test in the following table, C10.1.4, quoted from the TS 34.121
      a). Subtest 1: β_c/β_d=2/15
      b). Subtest 2: β_c/β_d=12/15
      c). Subtest 3: β_c/β_d=15/8
      d). Subtest 4: β_c/β_d=15/4
   vi. Set Delta ACK, Delta NACK and Delta CQI = 8
   vii. Set Ack-Nack Repetition Factor to 3
   viii. Set CQI Feedback Cycle (k) to 4 ms
   ix. Set CQI Repetition Factor to 2
   x. Power Ctrl Mode = All Up bits
d. The transmitted maximum output power was recorded.

The following tests were conducted according to the test requirements outlines in 3GPP TS 34.121 specification.
A summary of these settings are illustrated below:

C.8.1.12 Fixed Reference Channel Definition H-Set 12

Table C.8.1.12: Fixed Reference Channel H-Set 12

Parameter	Unit	Value
Nominal Avg. Inf. Bit Rate	kbps	60
Inter-TTI Distance	TTI's	1
Number of HARQ Processes	Processes	6
Information Bit Payload (N_{INF})	Bits	120
Number Code Blocks	Blocks	1
Binary Channel Bits Per TTI	Bits	960
Total Available SML's in UE	SML's	19200
Number of SML's per HARQ Proc.	SML's	3200
Coding Rate		0.15
Number of Physical Channel Codes	Codes	1
Modulation		QPSK
Note 1: The RMC is intended to be used for DC-HSDPA mode and both cells shall transmit with identical parameters as listed in the table.		
Note 2: Maximum number of transmission is limited to 1, i.e., retransmission is not allowed. The redundancy and constellation version 0 shall be used.		

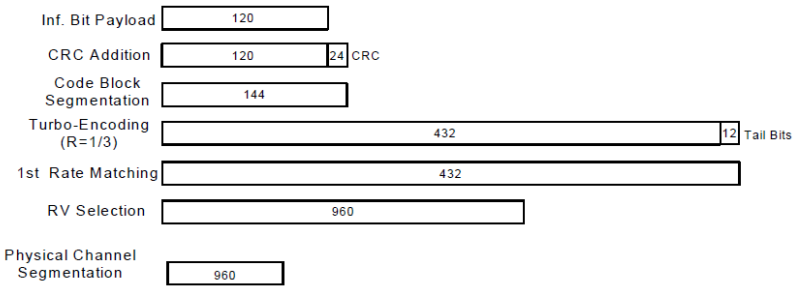

Figure C.8.19: Coding rate for Fixed reference Channel H-Set 12 (QPSK)

Setup Configuration

<WCDMA Conducted Power>

General Note:

1. Per KDB 941225 D01v03, SAR Body exposure is measured using a 12.2 kbps RMC with TPC bits configured to all "1's".
2. Per KDB 941225 D01v03, RMC 12.2kbps setting is used to evaluate SAR. If the maximum output power and tune-up tolerance specified for production units in HSDPA / HSUPA / DC-HSDPA is ≤ ¼ dB higher than RMC 12.2Kbps or when the highest reported SAR of the RMC12.2Kbps is scaled by the ratio of specified maximum output power and tune-up tolerance of HSDPA / HSUPA / DC-HSDPA to RMC12.2Kbps and the adjusted SAR is ≤ 1.2 W/kg, SAR measurement is not required for HSDPA / HSUPA / DC-HSDPA.

Full Power Mode (Proximity Sensor Inactive)

Band			WCDMA V			WCDMA II			WCDMA IV		
TX Channel			4132	4182	4233	9262	9400	9538	1312	1413	1513
Rx Channel			4357	4407	4458	9662	9800	9938	1537	1638	1738
Frequency (MHz)			826.4	836.4	846.6	1852.4	1880	1907.6	1712.4	1732.6	1752.6
MPR (dB)	3GPP Rel 99	RMC 12.2Kbps	23.55	23.64	23.63	22.75	22.77	22.63	22.65	22.78	22.75
0	3GPP Rel 6	HSDPA Subtest-1	23.12	23.16	23.24	22.10	22.30	22.14	22.17	22.15	22.25
0	3GPP Rel 6	HSDPA Subtest-2	22.96	23.19	23.91	22.09	22.26	22.00	22.13	22.25	22.16
0.5	3GPP Rel 6	HSDPA Subtest-3	22.36	22.69	22.50	21.69	21.83	21.56	21.74	21.76	21.76
0.5	3GPP Rel 6	HSDPA Subtest-4	22.35	22.65	22.57	21.65	21.81	21.53	21.67	21.66	21.71
0	3GPP Rel 8	DC-HSDPA Subtest-1	23.00	22.98	23.12	22.09	22.29	22.13	22.16	22.14	22.24
0	3GPP Rel 8	DC-HSDPA Subtest-2	22.96	23.19	22.99	22.08	22.25	22.00	22.12	22.24	22.15
0.5	3GPP Rel 8	DC-HSDPA Subtest-3	22.37	22.66	22.58	21.68	21.82	21.55	21.73	21.75	21.75
0.5	3GPP Rel 8	DC-HSDPA Subtest-4	22.56	22.72	22.55	21.64	21.80	21.52	21.66	21.65	21.70
0	3GPP Rel 6	HSUPA Subtest-1	22.55	22.54	22.40	22.10	22.04	22.13	22.00	22.10	22.06
2	3GPP Rel 6	HSUPA Subtest-2	21.68	21.74	21.65	20.76	20.80	20.79	20.66	20.85	20.78
1	3GPP Rel 6	HSUPA Subtest-3	21.78	22.00	21.55	21.20	21.50	21.09	21.01	21.03	21.05
2	3GPP Rel 6	HSUPA Subtest-4	21.76	21.79	21.66	21.10	21.07	21.13	21.18	21.15	21.13
0	3GPP Rel 6	HSUPA Subtest-5	22.99	23.23	23.09	22.06	22.25	22.18	22.15	22.19	22.30

Reduced Power Mode (Proximity Sensor active)

Band			WCDMA V			WCDMA II			WCDMA IV		
TX Channel			4132	4182	4233	9262	9400	9538	1312	1413	1513
Rx Channel			4357	4407	4458	9662	9800	9938	1537	1638	1738
Frequency (MHz)			826.4	836.4	846.6	1852.4	1880	1907.6	1712.4	1732.6	1752.6
MPR (dB)	3GPP Rel 99	RMC 12.2Kbps	20.34	20.42	20.33	19.90	20.00	19.93	19.70	19.76	19.42
0	3GPP Rel 6	HSDPA Subtest-1	19.86	19.84	19.98	19.25	19.45	19.29	19.43	19.41	19.51
0	3GPP Rel 6	HSDPA Subtest-2	19.82	20.05	19.85	19.24	19.41	19.15	19.39	19.51	19.42
0.5	3GPP Rel 6	HSDPA Subtest-3	19.23	19.52	19.44	18.84	18.98	18.71	19.00	19.02	19.02
0.5	3GPP Rel 6	HSDPA Subtest-4	19.42	19.58	19.41	18.80	18.96	18.68	18.93	18.92	18.97
0	3GPP Rel 8	DC-HSDPA Subtest-1	19.84	19.82	19.96	19.23	19.43	19.27	19.42	19.40	19.50
0	3GPP Rel 8	DC-HSDPA Subtest-2	19.80	20.03	19.83	19.22	19.39	19.13	19.38	19.50	19.41
0.5	3GPP Rel 8	DC-HSDPA Subtest-3	19.21	19.50	19.42	18.82	18.96	18.69	18.99	19.01	19.01
0.5	3GPP Rel 8	DC-HSDPA Subtest-4	19.40	19.56	19.39	18.78	18.94	18.66	18.92	18.91	18.96
0	3GPP Rel 6	HSUPA Subtest-1	20.20	20.09	19.75	19.87	19.94	19.99	19.69	19.74	19.61
2	3GPP Rel 6	HSUPA Subtest-2	19.33	19.39	19.30	18.78	18.80	18.77	18.28	18.39	18.40
1	3GPP Rel 6	HSUPA Subtest-3	19.43	19.65	19.20	19.35	19.55	19.40	18.86	19.00	18.75
2	3GPP Rel 6	HSUPA Subtest-4	19.44	19.45	19.48	18.67	18.91	18.92	18.50	18.44	18.42
0	3GPP Rel 6	HSUPA Subtest-5	20.21	20.18	20.22	19.40	19.59	19.52	19.57	19.51	19.32

<CDMA2000 Conducted Power>

General Note:

1. Per KDB 941225 D01v03, in Body SAR tested, the EUT is treated as data device and SAR is tested with Ev-Do Rev 0 (RTAP 153.6kbps) as the primary mode.

Full Power Mode (Proximity Sensor Inactive)

Band	CDMA2000 BC10			CDMA2000 BC0			CDMA2000 BC1		
TX Channel	476	580	684	1013	384	777	25	600	1175
Frequency (MHz)	817.9	820.5	823.1	824.7	836.52	848.31	1851.25	1880	1908.75
1xRTT RC1 SO55	23.06	23.12	23.05	23.05	23.29	23.00	23.93	23.88	23.70
1xRTT RC3 SO55	23.07	23.11	23.09	23.03	23.30	23.01	23.88	23.79	23.64
1xEVDO RTAP 153.6Kbps	23.16	23.21	23.14	23.02	23.35	23.10	23.94	23.81	23.72
1xEVDO RETAP 4096Bits	23.15	23.20	23.10	23.01	23.32	23.07	23.91	23.76	23.68

Reduced Power Mode (Proximity Sensor active)

Band	CDMA2000 BC10			CDMA2000 BC0			CDMA2000 BC1		
TX Channel	476	580	684	1013	384	777	25	600	1175
Frequency (MHz)	817.9	820.5	823.1	824.7	836.52	848.31	1851.25	1880	1908.75
1xRTT RC1 SO55	21.08	21.07	21.06	20.48	20.58	20.44	20.49	20.44	20.31
1xRTT RC3 SO55	21.10	21.14	21.11	20.56	20.60	20.34	20.51	20.43	20.28
1xEVDO RTAP 153.6Kbps	21.19	21.25	21.21	20.64	20.59	20.54	20.63	20.51	20.38
1xEVDO RETAP 4096Bits	21.04	21.06	21.09	20.59	20.55	20.49	20.50	20.49	20.33

<LTE Conducted Power>

General Note:

1. Anritsu MT8820C base station simulator was used to setup the connection with EUT; the frequency band, channel bandwidth, RB allocation configuration, modulation type are set in the base station simulator to configure EUT transmitting at maximum power and at different configurations which are requested to be reported to FCC, for conducted power measurement and SAR testing.
2. Per KDB 941225 D05v02r03, when a properly configured base station simulator is used for the SAR and power measurements, spectrum plots for each RB allocation and offset configuration is not required.
3. Per KDB 941225 D05v02r03, start with the largest channel bandwidth and measure SAR for QPSK with 1 RB allocation, using the RB offset and required test channel combination with the highest maximum output power for RB offsets at the upper edge, middle and lower edge of each required test channel.
4. Per KDB 941225 D05v02r03, 50% RB allocation for QPSK SAR testing follows 1RB QPSK allocation procedure.
5. Per KDB 941225 D05v02r03, For QPSK with 100% RB allocation, SAR is not required when the highest maximum output power for 100 % RB allocation is less than the highest maximum output power in 50% and 1 RB allocations and the highest reported SAR for 1 RB and 50% RB allocation are ≤ 0.8 W/kg. Otherwise, SAR is measured for the highest output power channel; and if the reported SAR is > 1.45 W/kg, the remaining required test channels must also be tested.
6. Per KDB 941225 D05v02r03, 16QAM output power for each RB allocation configuration is > not ½ dB higher than the same configuration in QPSK and the reported SAR for the QPSK configuration is ≤ 1.45 W/kg; Per KDB 941225 D05v02r03, 16QAM SAR testing is not required.
7. Per KDB 941225 D05v02r03, Smaller bandwidth output power for each RB allocation configuration is > not ½ dB higher than the same configuration in the largest supported bandwidth, and the reported SAR for the largest supported bandwidth is ≤ 1.45 W/kg; Per KDB 941225 D05v02r03, smaller bandwidth SAR testing is not required.

Maximum Average RF Power (Proximity Sensor Inactive)

<LTE Band 17>

BW [MHz]	Modulation	RB Size	RB Offset	Power Low Ch. / Freq.	Power Middle Ch. / Freq.	Power High Ch. / Freq.	Tune up Limit (dBm)	MPR (dB)
Channel				23780	23790	23800		
Frequency (MHz)				709	710	711		
10	QPSK	1	0	22.36	22.43	22.39	24	0
10	QPSK	1	24	22.35	22.34	22.25		
10	QPSK	1	49	22.18	22.20	22.15		
10	QPSK	25	0	21.40	21.45	21.36	23	1
10	QPSK	25	12	21.35	21.34	21.29		
10	QPSK	25	24	21.38	21.27	21.15		
10	QPSK	50	0	21.19	21.22	21.18		
10	16QAM	1	0	21.19	21.15	21.31	23	1
10	16QAM	1	24	21.49	21.53	21.48		
10	16QAM	1	49	21.27	21.20	21.15		
10	16QAM	25	0	20.30	20.39	20.30	22	2
10	16QAM	25	12	20.35	20.34	20.32		
10	16QAM	25	24	20.34	20.31	20.16		
10	16QAM	50	0	20.20	20.21	20.18		
Channel				23755	23790	23825	Tune up Limit (dBm)	MPR (dB)
Frequency (MHz)				706.5	710	713.5		
5	QPSK	1	0	22.42	22.40	22.37	24	0
5	QPSK	1	12	22.39	22.36	22.22		
5	QPSK	1	24	22.26	22.24	22.15		
5	QPSK	12	0	21.25	21.46	21.23	23	1
5	QPSK	12	6	21.39	21.50	21.29		
5	QPSK	12	11	21.47	21.42	21.15		
5	QPSK	25	0	21.26	21.38	21.19		
5	16QAM	1	0	21.21	21.40	21.44	23	1
5	16QAM	1	12	21.42	21.40	21.25		
5	16QAM	1	24	21.46	21.32	21.15		
5	16QAM	12	0	20.26	20.46	20.30	22	2
5	16QAM	12	6	20.42	20.52	20.33		
5	16QAM	12	11	20.45	20.52	20.16		
5	16QAM	25	0	20.26	20.38	20.20		

<LTE Band 13>

BW [MHz]	Modulation	RB Size	RB Offset	Power Low Ch. / Freq.	Power Middle Ch. / Freq.	Power High Ch. / Freq.	Tune up Limit (dBm)	MPR (dB)
Channel					23230			
Frequency (MHz)					782			
10	QPSK	1	0		22.33		24	0
10	QPSK	1	24		22.13			
10	QPSK	1	49		22.19			
10	QPSK	25	0		21.33		23	1
10	QPSK	25	12		21.29			
10	QPSK	25	24		21.31			
10	QPSK	50	0		21.17			
10	16QAM	1	0		21.13		23	1
10	16QAM	1	24		21.45			
10	16QAM	1	49		21.29			
10	16QAM	25	0		20.18		22	2
10	16QAM	25	12		20.27			
10	16QAM	25	24		20.36			
10	16QAM	50	0		20.18			
Channel				23205	23230	23255	Tune up Limit (dBm)	MPR (dB)
Frequency (MHz)				779.5	782	784.5		
5	QPSK	1	0	22.32	22.32	22.32	24	0
5	QPSK	1	12	22.28	22.31	22.27		
5	QPSK	1	24	22.13	22.23	22.13		
5	QPSK	12	0	21.23	21.21	21.37	23	1
5	QPSK	12	6	21.23	21.39	21.33		
5	QPSK	12	11	21.30	21.44	21.25		
5	QPSK	25	0	21.16	21.33	21.19		
5	16QAM	1	0	21.13	21.17	21.38	23	1
5	16QAM	1	12	21.26	21.38	21.32		
5	16QAM	1	24	21.29	21.43	21.16		
5	16QAM	12	0	20.25	20.28	20.37	22	2
5	16QAM	12	6	20.27	20.37	20.38		
5	16QAM	12	11	20.25	20.46	20.31		
5	16QAM	25	0	20.13	20.28	20.21		

<LTE Band 5>

BW [MHz]	Modulation	RB Size	RB Offset	Power Low Ch. / Freq.	Power Middle Ch. / Freq.	Power High Ch. / Freq.	Tune up Limit (dBm)	MPR (dB)
Channel				20450	20525	20600		
Frequency (MHz)				829	836.5	844		
10	QPSK	1	0	23.05	23.11	23.04	24	0
10	QPSK	1	24	23.00	23.05	23.01		
10	QPSK	1	49	22.98	23.00	22.85		
10	QPSK	25	0	22.00	22.06	21.99	23	1
10	QPSK	25	12	21.98	22.04	21.95		
10	QPSK	25	24	21.95	22.03	21.91		
10	QPSK	50	0	21.80	21.98	21.92		
10	16QAM	1	0	21.94	22.02	22.12	23	1
10	16QAM	1	24	22.10	22.12	22.06		
10	16QAM	1	49	22.00	22.06	21.91		
10	16QAM	25	0	20.93	20.97	21.01	22	2
10	16QAM	25	12	20.96	21.00	21.01		
10	16QAM	25	24	20.88	21.04	21.01		
10	16QAM	50	0	20.81	20.90	20.86		
Channel				20425	20525	20625	Tune up Limit (dBm)	MPR (dB)
Frequency (MHz)				826.5	836.5	846.5		
5	QPSK	1	0	22.85	22.96	22.97	24	0
5	QPSK	1	12	22.97	23.03	22.95		
5	QPSK	1	24	22.99	23.03	22.82		
5	QPSK	12	0	21.94	22.06	22.09	23	1
5	QPSK	12	6	22.08	22.06	22.04		
5	QPSK	12	11	22.05	22.11	22.01		
5	QPSK	25	0	21.93	22.04	22.00		
5	16QAM	1	0	21.94	22.05	22.04	23	1
5	16QAM	1	12	22.07	22.11	22.07		
5	16QAM	1	24	22.04	22.09	21.91		
5	16QAM	12	0	20.99	21.15	21.10	22	2
5	16QAM	12	6	21.09	21.16	21.05		
5	16QAM	12	11	21.06	21.10	21.02		
5	16QAM	25	0	20.88	21.02	20.96		

<LTE Band 4>

BW [MHz]	Modulation	RB Size	RB Offset	Power Low Ch. / Freq.	Power Middle Ch. / Freq.	Power High Ch. / Freq.	Tune up Limit (dBm)	MPR (dB)
Channel				20050	20175	20300		
Frequency (MHz)				1720	1732.5	1745		
20	QPSK	1	0	22.51	22.58	22.54	24	0
20	QPSK	1	49	22.39	22.40	22.43		
20	QPSK	1	99	22.38	22.38	22.25		
20	QPSK	50	0	21.21	21.22	21.13	23	1
20	QPSK	50	24	21.18	21.18	21.20		
20	QPSK	50	49	21.14	21.14	21.07		
20	QPSK	100	0	21.13	21.26	21.20		
20	16QAM	1	0	21.34	21.45	21.53	23	1
20	16QAM	1	49	21.46	21.65	21.61		
20	16QAM	1	99	21.35	21.61	21.33		
20	16QAM	50	0	20.15	20.22	20.18	22	2
20	16QAM	50	24	20.18	20.24	20.19		
20	16QAM	50	49	20.16	20.11	20.13		
20	16QAM	100	0	20.12	20.18	20.19		
Channel				20025	20175	20325	Tune up Limit (dBm)	MPR (dB)
Frequency (MHz)				1717.5	1732.5	1747.5		
15	QPSK	1	0	22.30	22.43	22.55	24	0
15	QPSK	1	37	22.46	22.50	22.44		
15	QPSK	1	74	22.29	22.40	22.31		
15	QPSK	36	0	21.22	21.36	21.26	23	1
15	QPSK	36	18	21.23	21.41	21.15		
15	QPSK	36	37	21.17	21.25	21.23		
15	QPSK	75	0	21.21	21.16	21.18		
15	16QAM	1	0	21.36	21.44	21.56	23	1
15	16QAM	1	37	21.45	21.56	21.45		
15	16QAM	1	74	21.31	21.45	21.33		
15	16QAM	36	0	20.24	20.31	20.30	22	2
15	16QAM	36	18	20.25	20.36	20.24		
15	16QAM	36	37	20.17	20.17	20.21		
15	16QAM	75	0	20.14	20.14	20.27		
Channel				20000	20175	20350	Tune up Limit (dBm)	MPR (dB)
Frequency (MHz)				1715	1732.5	1750		
10	QPSK	1	0	22.29	22.54	22.49	24	0
10	QPSK	1	24	22.50	22.52	22.38		
10	QPSK	1	49	22.48	22.31	22.31		
10	QPSK	25	0	21.28	21.41	21.29	23	1
10	QPSK	25	12	21.31	21.43	21.31		
10	QPSK	25	24	21.31	21.43	21.25		
10	QPSK	50	0	21.15	21.28	21.17		
10	16QAM	1	0	21.31	21.52	21.51	23	1
10	16QAM	1	24	21.46	21.52	21.43		
10	16QAM	1	49	21.39	21.34	21.32		
10	16QAM	25	0	20.25	20.38	20.29	22	2
10	16QAM	25	12	20.29	20.38	20.29		
10	16QAM	25	24	20.27	20.42	20.34		
10	16QAM	50	0	20.15	20.25	20.21		

Channel				19975	20175	20375	Tune up Limit (dBm)	MPR (dB)
Frequency (MHz)				1712.5	1732.5	1752.5		
5	QPSK	1	0	22.32	22.40	22.39	24	0
5	QPSK	1	12	22.44	22.49	22.46		
5	QPSK	1	24	22.42	22.40	22.32		
5	QPSK	12	0	21.35	21.52	21.49	23	1
5	QPSK	12	6	21.43	21.57	21.53		
5	QPSK	12	11	21.42	21.51	21.38		
5	QPSK	25	0	21.30	21.46	21.28		
5	16QAM	1	0	21.46	21.37	21.42	23	1
5	16QAM	1	12	21.54	21.54	21.57		
5	16QAM	1	24	21.50	21.58	21.52		
5	16QAM	12	0	20.40	20.59	20.63	22	2
5	16QAM	12	6	20.42	20.52	20.67		
5	16QAM	12	11	20.41	20.56	20.48		
5	16QAM	25	0	20.29	20.40	20.46		

<LTE Band 2>

BW [MHz]	Modulation	RB Size	RB Offset	Power Low Ch. / Freq.	Power Middle Ch. / Freq.	Power High Ch. / Freq.	Tune up Limit (dBm)	MPR (dB)
Channel				18700	18900	19100		
Frequency (MHz)				1860	1880	1900		
20	QPSK	1	0	22.64	22.48	22.44	24	0
20	QPSK	1	49	22.60	22.41	22.41		
20	QPSK	1	99	22.47	22.27	22.42		
20	QPSK	50	0	21.27	21.22	21.25	23	1
20	QPSK	50	24	21.23	21.18	21.00		
20	QPSK	50	49	21.22	21.18	21.04		
20	QPSK	100	0	21.32	21.26	21.13		
20	16QAM	1	0	21.53	21.61	21.49	23	1
20	16QAM	1	49	21.61	21.65	21.43		
20	16QAM	1	99	21.54	21.47	21.43		
20	16QAM	50	0	20.27	20.21	20.06	22	2
20	16QAM	50	24	20.21	20.19	20.09		
20	16QAM	50	49	20.18	20.14	20.05		
20	16QAM	100	0	20.26	20.22	20.04		
Channel				18675	18900	19125	Tune up Limit (dBm)	MPR (dB)
Frequency (MHz)				1857.5	1880	1902.5		
15	QPSK	1	0	22.51	22.44	22.29	24	0
15	QPSK	1	37	22.54	22.43	22.29		
15	QPSK	1	74	22.42	22.34	22.38		
15	QPSK	36	0	21.37	21.32	21.09	23	1
15	QPSK	36	18	21.38	21.33	21.11		
15	QPSK	36	37	21.34	21.29	21.14		
15	QPSK	75	0	21.27	21.17	21.07		
15	16QAM	1	0	21.49	21.48	21.31	23	1
15	16QAM	1	37	21.53	21.52	21.31		
15	16QAM	1	74	21.45	21.39	21.36		
15	16QAM	36	0	20.37	20.30	20.08	22	2
15	16QAM	36	18	20.32	20.25	20.12		
15	16QAM	36	37	20.29	20.22	20.11		
15	16QAM	75	0	20.28	20.17	20.08		
Channel				18650	18900	19150	Tune up Limit (dBm)	MPR (dB)
Frequency (MHz)				1855	1880	1905		
10	QPSK	1	0	22.51	22.39	22.28	24	0
10	QPSK	1	24	22.55	22.40	22.29		
10	QPSK	1	49	22.41	22.36	22.46		
10	QPSK	25	0	21.53	21.35	21.31	23	1
10	QPSK	25	12	21.40	21.39	21.23		
10	QPSK	25	24	21.36	21.35	21.28		
10	QPSK	50	0	21.16	21.22	21.09		
10	16QAM	1	0	21.43	21.47	21.25	23	1
10	16QAM	1	24	21.44	21.56	21.31		
10	16QAM	1	49	21.40	21.42	21.42		
10	16QAM	25	0	20.38	20.33	20.20	22	2
10	16QAM	25	12	20.44	20.32	20.17		
10	16QAM	25	24	20.33	20.26	20.18		
10	16QAM	50	0	20.19	20.19	20.04		

Channel				18625	18900	19175	Tune up Limit (dBm)	MPR (dB)
Frequency (MHz)				1852.5	1880	1907.5		
5	QPSK	1	0	22.38	22.41	22.38	24	0
5	QPSK	1	12	22.46	22.40	22.41		
5	QPSK	1	24	22.45	22.34	22.42		
5	QPSK	12	0	21.44	21.49	21.33	23	1
5	QPSK	12	6	21.47	21.45	21.41		
5	QPSK	12	11	21.53	21.40	21.44		
5	QPSK	25	0	21.37	21.32	21.35		
5	16QAM	1	0	21.42	21.47	21.45	23	1
5	16QAM	1	12	21.47	21.62	21.42		
5	16QAM	1	24	21.41	21.51	21.53		
5	16QAM	12	0	20.48	20.49	20.34	22	2
5	16QAM	12	6	20.51	20.46	20.39		
5	16QAM	12	11	20.52	20.43	20.39		
5	16QAM	25	0	20.39	20.33	20.26		

<LTE Band 25>

BW [MHz]	Modulation	RB Size	RB Offset	Power Low Ch. / Freq.	Power Middle Ch. / Freq.	Power High Ch. / Freq.	Tune up Limit (dBm)	MPR (dB)
Channel				26140	26340	26590		
Frequency (MHz)				1860	1880	1905		
20	QPSK	1	0	22.54	22.44	22.30	24	0
20	QPSK	1	49	22.40	22.34	22.18		
20	QPSK	1	99	22.28	22.23	22.29		
20	QPSK	50	0	21.25	21.24	21.20	23	1
20	QPSK	50	24	21.20	21.15	21.08		
20	QPSK	50	49	21.23	21.09	21.13		
20	QPSK	100	0	21.20	21.19	21.07		
20	16QAM	1	0	21.50	21.42	21.29	23	1
20	16QAM	1	49	21.60	21.43	21.27		
20	16QAM	1	99	21.51	21.30	21.32		
20	16QAM	50	0	20.16	20.17	20.02	22	2
20	16QAM	50	24	20.13	20.13	20.00		
20	16QAM	50	49	20.23	20.07	20.08		
20	16QAM	100	0	20.19	20.15	20.05		
Channel				26115	26340	26615	Tune up Limit (dBm)	MPR (dB)
Frequency (MHz)				1857.5	1880	1907.5		
15	QPSK	1	0	22.48	22.44	22.34	24	0
15	QPSK	1	37	22.45	22.41	22.30		
15	QPSK	1	74	22.41	22.28	22.32		
15	QPSK	36	0	21.20	21.23	21.12	23	1
15	QPSK	36	18	21.23	21.24	21.19		
15	QPSK	36	37	21.30	21.21	21.22		
15	QPSK	75	0	21.18	21.15	21.07		
15	16QAM	1	0	21.46	21.49	21.29	23	1
15	16QAM	1	37	21.39	21.54	21.32		
15	16QAM	1	74	21.51	21.40	21.34		
15	16QAM	36	0	20.23	20.26	20.10	22	2
15	16QAM	36	18	20.20	20.21	20.18		
15	16QAM	36	37	20.25	20.18	20.12		
15	16QAM	75	0	20.16	20.13	20.07		
Channel				26090	26340	26640	Tune up Limit (dBm)	MPR (dB)
Frequency (MHz)				1855	1880	1910		
10	QPSK	1	0	22.42	22.42	22.38	24	0
10	QPSK	1	24	22.36	22.30	22.22		
10	QPSK	1	49	22.30	22.37	22.22		
10	QPSK	25	0	21.32	21.36	21.28	23	1
10	QPSK	25	12	21.25	21.26	21.28		
10	QPSK	25	24	21.23	21.26	21.32		
10	QPSK	50	0	21.19	21.18	21.16		
10	16QAM	1	0	21.38	21.40	21.29	23	1
10	16QAM	1	24	21.36	21.44	21.31		
10	16QAM	1	49	21.35	21.29	21.26		
10	16QAM	25	0	20.31	20.26	20.18	22	2
10	16QAM	25	12	20.25	20.24	20.18		
10	16QAM	25	24	20.22	20.24	20.22		
10	16QAM	50	0	20.12	20.11	20.10		

Channel				26065	26340	26665	Tune up Limit (dBm)	MPR (dB)
Frequency (MHz)				1852.5	1880	1912.5		
5	QPSK	1	0	22.53	22.40	22.42	24	0
5	QPSK	1	12	22.51	22.38	22.40		
5	QPSK	1	24	22.50	22.35	22.38		
5	QPSK	12	0	21.54	21.46	21.40	23	1
5	QPSK	12	6	21.57	21.45	21.42		
5	QPSK	12	11	21.45	21.44	21.49		
5	QPSK	25	0	21.48	21.37	21.35		
5	16QAM	1	0	21.53	21.50	21.46	23	1
5	16QAM	1	12	21.54	21.49	21.57		
5	16QAM	1	24	21.56	21.41	21.41		
5	16QAM	12	0	20.67	20.44	20.37	22	2
5	16QAM	12	6	20.61	20.45	20.40		
5	16QAM	12	11	20.46	20.45	20.47		
5	16QAM	25	0	20.36	20.30	20.33		

Reduced Average RF Power (Proximity Sensor active)

<LTE Band 17>

BW [MHz]	Modulation	RB Size	RB Offset	Power Low Ch. / Freq.	Power Middle Ch. / Freq.	Power High Ch. / Freq.	Tune up Limit (dBm)	MPR (dB)
Channel				23780	23790	23800		
Frequency (MHz)				709	710	711		
10	QPSK	1	0	21.52	21.60	21.56	22.5	0
10	QPSK	1	24	21.47	21.50	21.48		
10	QPSK	1	49	21.46	21.41	21.26		
10	QPSK	25	0	21.08	21.18	21.12	22.5	0
10	QPSK	25	12	21.12	21.06	21.04		
10	QPSK	25	24	21.06	21.01	21.01		
10	QPSK	50	0	20.97	21.06	21.04		
10	16QAM	1	0	20.96	21.09	21.10	22.5	0
10	16QAM	1	24	21.21	21.27	21.18		
10	16QAM	1	49	20.96	21.03	21.03		
10	16QAM	25	0	21.09	21.15	21.04	22.5	0
10	16QAM	25	12	21.04	21.09	21.03		
10	16QAM	25	24	21.09	21.05	21.02		
10	16QAM	50	0	21.08	21.04	21.01		
Channel				23755	23790	23825	Tune up Limit (dBm)	MPR (dB)
Frequency (MHz)				706.5	710	713.5		
5	QPSK	1	0	21.39	21.50	21.55	22.5	0
5	QPSK	1	12	21.43	21.48	21.49		
5	QPSK	1	24	21.46	21.41	21.17		
5	QPSK	12	0	20.98	21.20	21.09	22.5	0
5	QPSK	12	6	21.12	21.26	21.01		
5	QPSK	12	11	21.19	21.19	21.02		
5	QPSK	25	0	20.99	21.13	21.05		
5	16QAM	1	0	20.98	21.16	21.14	22.5	0
5	16QAM	1	12	21.15	21.12	21.08		
5	16QAM	1	24	21.18	21.01	21.03		
5	16QAM	12	0	21.02	21.19	21.09	22.5	0
5	16QAM	12	6	21.07	21.18	21.05		
5	16QAM	12	11	21.02	21.11	21.04		
5	16QAM	25	0	21.06	21.15	21.01		

<LTE Band 13>

BW [MHz]	Modulation	RB Size	RB Offset	Power Low Ch. / Freq.	Power Middle Ch. / Freq.	Power High Ch. / Freq.	Tune up Limit (dBm)	MPR (dB)
Channel					23230			
Frequency (MHz)					782			
10	QPSK	1	0		20.27		20.5	0
10	QPSK	1	24		20.16			
10	QPSK	1	49		20.04			
10	QPSK	25	0		20.09		20.5	0
10	QPSK	25	12		20.08			
10	QPSK	25	24		20.07			
10	QPSK	50	0		19.97			
10	16QAM	1	0		20.01		20.5	0
10	16QAM	1	24		20.14			
10	16QAM	1	49		20.05			
10	16QAM	25	0		19.95		20.5	0
10	16QAM	25	12		20.10			
10	16QAM	25	24		20.11			
10	16QAM	50	0		19.97			
Channel				23205	23230	23255	Tune up Limit (dBm)	MPR (dB)
Frequency (MHz)				779.5	782	784.5		
5	QPSK	1	0	20.00	20.04	20.22	20.5	0
5	QPSK	1	12	20.05	20.17	20.18		
5	QPSK	1	24	20.16	20.26	20.00		
5	QPSK	12	0	20.07	20.10	20.18	20.5	0
5	QPSK	12	6	20.04	20.19	20.19		
5	QPSK	12	11	20.06	20.13	20.15		
5	QPSK	25	0	20.00	20.12	20.00		
5	16QAM	1	0	19.96	19.96	20.14	20.5	0
5	16QAM	1	12	20.06	20.16	20.16		
5	16QAM	1	24	20.12	20.25	20.03		
5	16QAM	12	0	20.03	20.07	20.14	20.5	0
5	16QAM	12	6	20.09	20.19	20.18		
5	16QAM	12	11	20.10	20.19	20.17		
5	16QAM	25	0	19.91	20.11	20.07		

<LTE Band 5>

BW [MHz]	Modulation	RB Size	RB Offset	Power Low Ch. / Freq.	Power Middle Ch. / Freq.	Power High Ch. / Freq.	Tune up Limit (dBm)	MPR (dB)
Channel				20450	20525	20600		
Frequency (MHz)				829	836.5	844		
10	QPSK	1	0	20.95	21.09	20.97	21.5	0
10	QPSK	1	24	20.92	20.96	20.89		
10	QPSK	1	49	20.91	20.98	20.80		
10	QPSK	25	0	20.89	20.94	20.87	21.5	0
10	QPSK	25	12	20.85	20.86	20.86		
10	QPSK	25	24	20.83	20.88	20.83		
10	QPSK	50	0	20.70	20.77	20.72		
10	16QAM	1	0	20.78	20.83	20.95	21.5	0
10	16QAM	1	24	20.91	20.96	20.92		
10	16QAM	1	49	20.88	20.95	20.74		
10	16QAM	25	0	20.86	20.85	20.87	21.5	0
10	16QAM	25	12	20.83	20.86	20.78		
10	16QAM	25	24	20.75	20.90	20.81		
10	16QAM	50	0	20.66	20.76	20.68		
Channel				20425	20525	20625	Tune up Limit (dBm)	MPR (dB)
Frequency (MHz)				826.5	836.5	846.5		
5	QPSK	1	0	20.81	20.97	20.92	21.5	0
5	QPSK	1	12	20.92	20.95	20.90		
5	QPSK	1	24	20.94	20.97	20.74		
5	QPSK	12	0	20.79	20.98	20.92	21.5	0
5	QPSK	12	6	20.97	20.98	20.90		
5	QPSK	12	11	20.94	21.03	20.84		
5	QPSK	25	0	20.81	20.95	20.84		
5	16QAM	1	0	20.80	20.93	20.86	21.5	0
5	16QAM	1	12	20.89	20.99	20.89		
5	16QAM	1	24	20.94	21.00	20.76		
5	16QAM	12	0	20.83	20.97	20.94	21.5	0
5	16QAM	12	6	20.98	20.96	20.95		
5	16QAM	12	11	20.96	21.00	20.85		
5	16QAM	25	0	20.73	20.83	20.81		

<LTE Band 4>

BW [MHz]	Modulation	RB Size	RB Offset	Power Low Ch. / Freq.	Power Middle Ch. / Freq.	Power High Ch. / Freq.	Tune up Limit (dBm)	MPR (dB)
Channel				20050	20175	20300		
Frequency (MHz)				1720	1732.5	1745		
20	QPSK	1	0	19.60	19.55	19.52	20.5	0
20	QPSK	1	49	19.52	19.49	19.43		
20	QPSK	1	99	19.38	19.40	19.29		
20	QPSK	50	0	19.32	19.30	19.24	20.5	0
20	QPSK	50	24	19.31	19.28	19.23		
20	QPSK	50	49	19.24	19.13	19.13		
20	QPSK	100	0	19.28	19.25	19.22		
20	16QAM	1	0	19.36	19.41	19.40	20.5	0
20	16QAM	1	49	19.47	19.53	19.46		
20	16QAM	1	99	19.38	19.40	19.31		
20	16QAM	50	0	19.27	19.22	19.16	20.5	0
20	16QAM	50	24	19.25	19.26	19.18		
20	16QAM	50	49	19.20	19.13	19.10		
20	16QAM	100	0	19.22	19.18	19.18		
Channel				20025	20175	20325	Tune up Limit (dBm)	MPR (dB)
Frequency (MHz)				1717.5	1732.5	1747.5		
15	QPSK	1	0	19.44	19.46	19.58	20.5	0
15	QPSK	1	37	19.51	19.56	19.43		
15	QPSK	1	74	19.36	19.42	19.35		
15	QPSK	36	0	19.33	19.27	19.34	20.5	0
15	QPSK	36	18	19.31	19.34	19.25		
15	QPSK	36	37	19.23	19.24	19.18		
15	QPSK	75	0	19.32	19.19	19.27		
15	16QAM	1	0	19.30	19.41	19.55	20.5	0
15	16QAM	1	37	19.41	19.51	19.39		
15	16QAM	1	74	19.25	19.34	19.33		
15	16QAM	36	0	19.28	19.27	19.29	20.5	0
15	16QAM	36	18	19.32	19.33	19.20		
15	16QAM	36	37	19.22	19.17	19.20		
15	16QAM	75	0	19.20	19.20	19.18		
Channel				20000	20175	20350	Tune up Limit (dBm)	MPR (dB)
Frequency (MHz)				1715	1732.5	1750		
10	QPSK	1	0	19.32	19.54	19.47	20.5	0
10	QPSK	1	24	19.43	19.51	19.38		
10	QPSK	1	49	19.49	19.34	19.30		
10	QPSK	25	0	19.31	19.42	19.32	20.5	0
10	QPSK	25	12	19.41	19.35	19.24		
10	QPSK	25	24	19.36	19.40	19.27		
10	QPSK	50	0	19.20	19.28	19.19		
10	16QAM	1	0	19.35	19.50	19.40	20.5	0
10	16QAM	1	24	19.44	19.49	19.33		
10	16QAM	1	49	19.42	19.29	19.27		
10	16QAM	25	0	19.35	19.32	19.26	20.5	0
10	16QAM	25	12	19.34	19.39	19.25		
10	16QAM	25	24	19.39	19.40	19.25		
10	16QAM	50	0	19.23	19.26	19.14		

Channel				19975	20175	20375	Tune up Limit (dBm)	MPR (dB)
Frequency (MHz)				1712.5	1732.5	1752.5		
5	QPSK	1	0	19.36	19.36	19.41	20.5	0
5	QPSK	1	12	19.45	19.47	19.43		
5	QPSK	1	24	19.40	19.41	19.30		
5	QPSK	12	0	19.31	19.46	19.46	20.5	0
5	QPSK	12	6	19.41	19.53	19.49		
5	QPSK	12	11	19.37	19.46	19.34		
5	QPSK	25	0	19.40	19.39	19.34		
5	16QAM	1	0	19.35	19.35	19.40	20.5	0
5	16QAM	1	12	19.46	19.49	19.45		
5	16QAM	1	24	19.38	19.45	19.34		
5	16QAM	12	0	19.36	19.52	19.50	20.5	0
5	16QAM	12	6	19.45	19.50	19.50		
5	16QAM	12	11	19.43	19.49	19.36		
5	16QAM	25	0	19.30	19.36	19.25		

<LTE Band 2>

BW [MHz]	Modulation	RB Size	RB Offset	Power Low Ch. / Freq.	Power Middle Ch. / Freq.	Power High Ch. / Freq.	Tune up Limit (dBm)	MPR (dB)
Channel				18700	18900	19100		
Frequency (MHz)				1860	1880	1900		
20	QPSK	1	0	19.61	19.53	19.43	20.5	0
20	QPSK	1	49	19.43	19.43	19.24		
20	QPSK	1	99	19.37	19.27	19.38		
20	QPSK	50	0	19.35	19.29	19.16	20.5	0
20	QPSK	50	24	19.28	19.23	19.07		
20	QPSK	50	49	19.23	19.15	19.07		
20	QPSK	100	0	19.28	19.26	19.17		
20	16QAM	1	0	19.48	19.50	19.41	20.5	0
20	16QAM	1	49	19.41	19.40	19.26		
20	16QAM	1	99	19.34	19.24	19.35		
20	16QAM	50	0	19.27	19.24	19.10	20.5	0
20	16QAM	50	24	19.25	19.18	19.07		
20	16QAM	50	49	19.18	19.12	19.08		
20	16QAM	100	0	19.23	19.21	19.06		
Channel				18675	18900	19125	Tune up Limit (dBm)	MPR (dB)
Frequency (MHz)				1857.5	1880	1902.5		
15	QPSK	1	0	19.43	19.49	19.40	20.5	0
15	QPSK	1	37	19.39	19.45	19.28		
15	QPSK	1	74	19.40	19.38	19.29		
15	QPSK	36	0	19.40	19.32	19.23	20.5	0
15	QPSK	36	18	19.31	19.35	19.13		
15	QPSK	36	37	19.32	19.30	19.06		
15	QPSK	75	0	19.23	19.31	19.17		
15	16QAM	1	0	19.48	19.50	19.42	20.5	0
15	16QAM	1	37	19.42	19.46	19.33		
15	16QAM	1	74	19.40	19.38	19.31		
15	16QAM	36	0	19.44	19.31	19.22	20.5	0
15	16QAM	36	18	19.27	19.29	19.16		
15	16QAM	36	37	19.28	19.29	19.07		
15	16QAM	75	0	19.18	19.22	19.08		
Channel				18650	18900	19150	Tune up Limit (dBm)	MPR (dB)
Frequency (MHz)				1855	1880	1905		
10	QPSK	1	0	19.45	19.45	19.26	20.5	0
10	QPSK	1	24	19.41	19.44	19.35		
10	QPSK	1	49	19.42	19.40	19.48		
10	QPSK	25	0	19.48	19.35	19.25	20.5	0
10	QPSK	25	12	19.41	19.40	19.29		
10	QPSK	25	24	19.38	19.39	19.33		
10	QPSK	50	0	19.22	19.29	19.17		
10	16QAM	1	0	19.44	19.46	19.24	20.5	0
10	16QAM	1	24	19.43	19.47	19.30		
10	16QAM	1	49	19.41	19.37	19.40		
10	16QAM	25	0	19.36	19.34	19.19	20.5	0
10	16QAM	25	12	19.39	19.34	19.24		
10	16QAM	25	24	19.34	19.31	19.23		
10	16QAM	50	0	19.19	19.19	19.15		

Channel				18625	18900	19175	Tune up Limit (dBm)	MPR (dB)
Frequency (MHz)				1852.5	1880	1907.5		
5	QPSK	1	0	19.45	19.46	19.36	20.5	0
5	QPSK	1	12	19.49	19.44	19.40		
5	QPSK	1	24	19.37	19.42	19.51		
5	QPSK	12	0	19.39	19.41	19.40	20.5	0
5	QPSK	12	6	19.47	19.46	19.33		
5	QPSK	12	11	19.49	19.45	19.43		
5	QPSK	25	0	19.43	19.36	19.37		
5	16QAM	1	0	19.41	19.45	19.37	20.5	0
5	16QAM	1	12	19.46	19.43	19.35		
5	16QAM	1	24	19.38	19.41	19.46		
5	16QAM	12	0	19.43	19.49	19.37	20.5	0
5	16QAM	12	6	19.45	19.47	19.41		
5	16QAM	12	11	19.47	19.43	19.43		
5	16QAM	25	0	19.40	19.33	19.27		

<LTE Band 25>

BW [MHz]	Modulation	RB Size	RB Offset	Power Low Ch. / Freq.	Power Middle Ch. / Freq.	Power High Ch. / Freq.	Tune up Limit (dBm)	MPR (dB)
Channel				26140	26340	26590		
Frequency (MHz)				1860	1880	1905		
20	QPSK	1	0	19.59	19.44	19.38	20.5	0
20	QPSK	1	49	19.44	19.41	19.33		
20	QPSK	1	99	19.36	19.30	19.35		
20	QPSK	50	0	19.35	19.29	19.18	20.5	0
20	QPSK	50	24	19.26	19.19	19.10		
20	QPSK	50	49	19.32	19.16	19.17		
20	QPSK	100	0	19.30	19.25	19.14		
20	16QAM	1	0	19.48	19.40	19.29	20.5	0
20	16QAM	1	49	19.43	19.38	19.30		
20	16QAM	1	99	19.36	19.30	19.32		
20	16QAM	50	0	19.21	19.24	19.14	20.5	0
20	16QAM	50	24	19.22	19.19	19.07		
20	16QAM	50	49	19.24	19.11	19.13		
20	16QAM	100	0	19.23	19.19	19.09		
Channel				26115	26340	26615	Tune up Limit (dBm)	MPR (dB)
Frequency (MHz)				1857.5	1880	1907.5		
15	QPSK	1	0	19.51	19.51	19.40	20.5	0
15	QPSK	1	37	19.41	19.49	19.43		
15	QPSK	1	74	19.52	19.32	19.44		
15	QPSK	36	0	19.31	19.32	19.22	20.5	0
15	QPSK	36	18	19.20	19.27	19.30		
15	QPSK	36	37	19.30	19.18	19.16		
15	QPSK	75	0	19.23	19.19	19.18		
15	16QAM	1	0	19.47	19.46	19.35	20.5	0
15	16QAM	1	37	19.41	19.43	19.36		
15	16QAM	1	74	19.48	19.31	19.37		
15	16QAM	36	0	19.24	19.30	19.20	20.5	0
15	16QAM	36	18	19.23	19.23	19.27		
15	16QAM	36	37	19.25	19.19	19.21		
15	16QAM	75	0	19.16	19.20	19.15		
Channel				26090	26340	26640	Tune up Limit (dBm)	MPR (dB)
Frequency (MHz)				1855	1880	1910		
10	QPSK	1	0	19.38	19.44	19.33	20.5	0
10	QPSK	1	24	19.40	19.40	19.35		
10	QPSK	1	49	19.41	19.33	19.34		
10	QPSK	25	0	19.39	19.33	19.31	20.5	0
10	QPSK	25	12	19.34	19.34	19.28		
10	QPSK	25	24	19.30	19.26	19.33		
10	QPSK	50	0	19.26	19.20	19.24		
10	16QAM	1	0	19.42	19.45	19.32	20.5	0
10	16QAM	1	24	19.37	19.39	19.38		
10	16QAM	1	49	19.34	19.29	19.28		
10	16QAM	25	0	19.36	19.31	19.30	20.5	0
10	16QAM	25	12	19.24	19.25	19.27		
10	16QAM	25	24	19.18	19.25	19.27		
10	16QAM	50	0	19.17	19.16	19.22		

Channel				26065	26340	26665	Tune up Limit (dBm)	MPR (dB)
Frequency (MHz)				1852.5	1880	1912.5		
5	QPSK	1	0	19.44	19.41	19.38	20.5	0
5	QPSK	1	12	19.30	19.39	19.41		
5	QPSK	1	24	19.37	19.37	19.34		
5	QPSK	12	0	19.41	19.42	19.37	20.5	0
5	QPSK	12	6	19.49	19.45	19.41		
5	QPSK	12	11	19.40	19.39	19.43		
5	QPSK	25	0	19.37	19.33	19.36		
5	16QAM	1	0	19.37	19.43	19.39	20.5	0
5	16QAM	1	12	19.39	19.37	19.40		
5	16QAM	1	24	19.37	19.37	19.33		
5	16QAM	12	0	19.46	19.41	19.37	20.5	0
5	16QAM	12	6	19.46	19.43	19.43		
5	16QAM	12	11	19.38	19.38	19.46		
5	16QAM	25	0	19.33	19.30	19.28		

14. Antenna Location

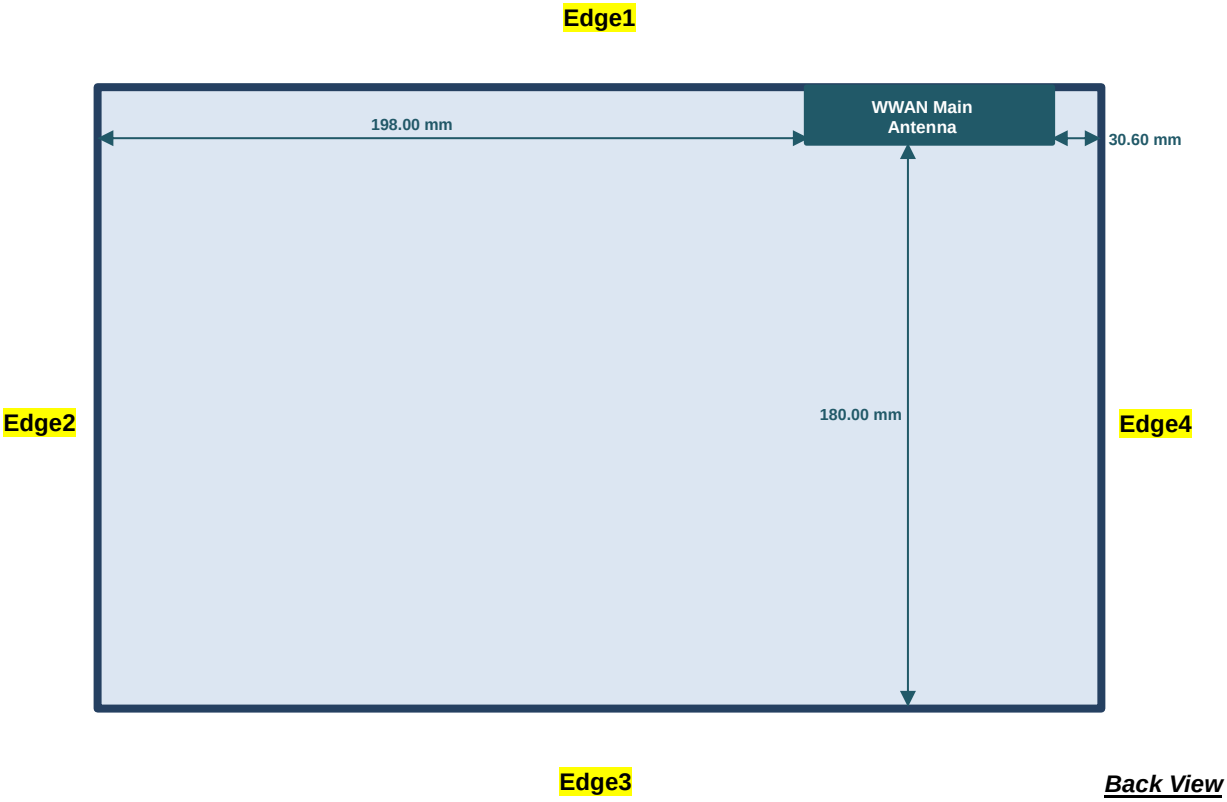

<SAR test exclusion table>

General Note:

1. The below table, when the distance is < 50 mm exclusion threshold is "Ratio", when the distance is > 50 mm exclusion threshold is "mW"
2. Maximum power is the source-based time-average power and represents the maximum RF output power among production units
3. Per KDB 447498 D01v05r02, for larger devices, the test separation distance of adjacent edge configuration is determined by the closest separation between the antenna and the user.
4. Per KDB 447498 D01v05r02, standalone SAR test exclusion threshold is applied; If the test separation distance is < 5mm, 5mm is used to determine SAR exclusion threshold.
5. Per KDB 447498 D01v05r02, the 1-g and 10-g SAR test exclusion thresholds for 100 MHz to 6 GHz at *test separation distances* ≤ 50 mm are determined by:

   [(*max. power of channel, including tune-up tolerance, mW*)/(*min. test separation distance, mm*)] ·[$\sqrt{f(GHz)}$] ≤ 3.0 for 1-g SAR and ≤ 7.5 for 10-g extremity SAR
   - f(GHz) is the RF channel transmit frequency in GHz
   - Power and distance are rounded to the nearest mW and mm before calculation
   - The result is rounded to one decimal place for comparison
6. Per KDB 447498 D01v05r02, at 100 MHz to 6 GHz and for *test separation distances* > 50 mm, the SAR test exclusion threshold is determined according to the following

   a) [Threshold at 50 mm in step 1) + (test separation distance - 50 mm)·(f(MHz)/150)] mW, at 100 MHz to 1500 MHz

   b) [Threshold at 50 mm in step 1) + (test separation distance - 50 mm)·10] mW at > 1500 MHz and ≤ 6 GHz

	Wireless Interface	GPRS 850 Class 10	GPRS 1900 Class 10	WCDMA Band V	WCDMA Band IV	WCDMA Band II	CDMA BC10	CDMA BC0	CDMA BC1	LTE Band 17	LTE Band 13	LTE Band 5	LTE Band 4	LTE Band 2	LTE Band 25
Exposure Position	Calculated Frequency	848MHz	1909MHz	846MHz	1750MHz	1907MHz	846MHz	848MHz	1907MHz	713MHz	784MHz	848MHz	1754MHz	1909MHz	1914MHz
	Maximum power (dBm)	27	24	24	24	24	24.5	24.5	24.5	24	24	24	24	24	24
	Maximum rated power(mW)	501	251	251	251	251	282	282	282	251	251	251	251	251	251
Bottom Face	Separation distance(mm)	5													
	exclusion threshold	92	69	46	66	69	52	52	78	42	44	46	66	69	69
	Testing required?	Yes	Yes	Yes	Yes	Yes	Yes	Yes	Yes	Yes	Yes	Yes	Yes	Yes	Yes
Edge 1	Separation distance(mm)	5.00													
	exclusion threshold	92	69	46	66	69	52	52	78	42	44	46	66	69	69
	Testing required?	Yes	Yes	Yes	Yes	Yes	Yes	Yes	Yes	Yes	Yes	Yes	Yes	Yes	Yes
Edge 2	Separation distance(mm)	198.00													
	exclusion threshold	1000	1589	998	1593	1589	998	1000	1589	881	943	1000	1593	1589	1588
	Testing required?	No	No	No	No	No	No	No	No	No	No	No	No	No	No
Edge 3	Separation distance(mm)	180.00													
	exclusion threshold	898	1409	896	1413	1409	896	898	1409	796	849	898	1413	1409	1408
	Testing required?	No	No	No	No	No	No	No	No	No	No	No	No	No	No
Edge 4	Separation distance(mm)	30.60													
	exclusion threshold	15	11	8	11	11	8	8	13	7	7	8	11	11	11
	Testing required?	Yes	Yes	Yes	Yes	Yes	Yes	Yes	Yes	Yes	Yes	Yes	Yes	Yes	Yes

15. SAR Test Results

General Note:

1. Per KDB 447498 D01v05r02, the reported SAR is the measured SAR value adjusted for maximum tune-up tolerance.
   a. Tune-up scaling Factor = tune-up limit power (mW) / EUT RF power (mW), where tune-up limit is the maximum rated power among all production units.
   b. For WWAN: Reported SAR(W/kg)= Measured SAR(W/kg)*Tune-up Scaling Factor
2. Per KDB 447498 D01v05r02, for each exposure position, testing of other required channels within the operating mode of a frequency band is not required when the *reported* 1-g or 10-g SAR for the mid-band or highest output power channel is:
   - ≤ 0.8 W/kg or 2.0 W/kg, for 1-g or 10-g respectively, when the transmission band is ≤ 100 MHz
   - ≤ 0.6 W/kg or 1.5 W/kg, for 1-g or 10-g respectively, when the transmission band is between 100 MHz and 200 MHz
   - ≤ 0.4 W/kg or 1.0 W/kg, for 1-g or 10-g respectively, when the transmission band is ≥ 200 MHz
3. For the exposure positions that proximity sensor power reduction is applied for SAR compliance, additional SAR testing with EUT transmitting full power in normal mode was performed; 1.2cm for bottom face, 0cm for bottom face, 0.5cm for edge1.
4. Per KDB 941225 D01v03, for Body SAR test reduction for GPRS and EDGE modes is determined by the source-based time-averaged output power including tune-up tolerance, for modes with the same specified maximum output power and tolerance, the higher number time-slot configuration should be tested, therefore, the GPRS 2Tx slots modes was selected when EUT operating without power back-off, the GPRS 2Tx slots modes was selected when EUT operating with power back-off, according to the highest source-based time-averaged output power.
5. Per KDB 941225 D01v03, SAR for body exposure is measured using a 12.2 kbps RMC with TPC bits configured to all “1’s”.
6. Per KDB 941225 D01v03, RMC 12.2kbps setting is used to evaluate SAR. If the maximum output power and tune-up tolerance specified for production units in HSDPA / HSUPA / DC-HSDPA is ≤ ¼ dB higher than RMC 12.2Kbps or when the highest reported SAR of the RMC12.2Kbps is scaled by the ratio of specified maximum output power and tune-up tolerance of HSDPA / HSUPA / DC-HSDPA to RMC12.2Kbps and the adjusted SAR is ≤ 1.2 W/kg, SAR measurement is not required for HSDPA / HSUPA / DC-HSDPA.
7. Per KDB 941225 D01v03 in Body SAR testing, the EUT is treated as data device and SAR is tested with Ev-Do Rev 0 (RTAP 153.6kbps) as the primary mode.
8. Per KDB 941225 D05v02r03, start with the largest channel bandwidth and measure SAR for QPSK with 1 RB allocation, using the RB offset and required test channel combination with the highest maximum output power for RB offsets at the upper edge, middle and lower edge of each required test channel.
9. Per KDB 941225 D05v02r03, 50% RB allocation for QPSK SAR testing follows 1RB QPSK allocation procedure.
10. Per KDB 941225 D05v02r03, For QPSK with 100% RB allocation, SAR is not required when the highest maximum output power for 100 % RB allocation is less than the highest maximum output power in 50% and 1 RB allocations and the highest reported SAR for 1 RB and 50% RB allocation are ≤ 0.8 W/kg. Otherwise, SAR is measured for the highest output power channel; and if the reported SAR is > 1.45 W/kg, the remaining required test channels must also be tested.
11. Per KDB 941225 D05v02r03, 16QAM output power for each RB allocation configuration is > not ½ dB higher than the same configuration in QPSK and the reported SAR for the QPSK configuration is ≤ 1.45 W/kg; Per KDB 941225 D05v02r03, 16QAM SAR testing is not required.
12. Per KDB 941225 D05v02r03, Smaller bandwidth output power for each RB allocation configuration is > not ½ dB higher than the same configuration in the largest supported bandwidth, and the reported SAR for the largest supported bandwidth is ≤ 1.45 W/kg; Per KDB 941225 D05v02r03, smaller bandwidth SAR testing is not required.

15.1 Body SAR

<GSM SAR>

Plot No.	Band	Mode	Test Position	Gap (cm)	Battery	Power Reduction	Ch.	Freq. (MHz)	Average Power (dBm)	Tune-Up Limit (dBm)	Tune-up Scaling Factor	Power Drift (dB)	Measured 1g SAR (W/kg)	Reported 1g SAR (W/kg)
	GSM850	GPRS (2 Tx slots)	Bottom Face	0cm	Normal Battery	ON	189	836.4	27.41	27.50	1.021	-0.09	1.110	1.133
	GSM850	GPRS (2 Tx slots)	Bottom Face	0cm	Normal Battery	ON	128	824.2	27.34	27.50	1.038	0.01	1.130	1.172
01	GSM850	GPRS (2 Tx slots)	Bottom Face	0cm	Normal Battery	ON	251	848.8	27.25	27.50	1.059	-0.04	1.130	**1.197**
	GSM850	GPRS (2 Tx slots)	Edge 1	0cm	Normal Battery	ON	189	836.4	27.41	27.50	1.021	-0.02	0.461	0.471
	GSM850	GPRS (2 Tx slots)	Bottom Face	1.2cm	Normal Battery	OFF	128	824.2	32.13	33.00	1.222	-0.06	0.844	1.031
	GSM850	GPRS (2 Tx slots)	Bottom Face	1.2cm	Normal Battery	OFF	189	836.4	32.09	33.00	1.233	-0.06	0.881	1.086
	GSM850	GPRS (2 Tx slots)	Bottom Face	1.2cm	Normal Battery	OFF	251	848.8	32.07	33.00	1.239	-0.02	0.964	1.194
	GSM850	GPRS (2 Tx slots)	Bottom Face	0cm	Thick Battery	OFF	128	824.2	32.13	33.00	1.222	-0.02	0.648	0.792
	GSM850	GPRS (2 Tx slots)	Edge 1	0.5cm	Normal Battery	OFF	128	824.2	32.13	33.00	1.222	0.01	0.945	1.155
	GSM850	GPRS (2 Tx slots)	Edge 1	0.5cm	Normal Battery	OFF	189	836.4	32.09	33.00	1.233	-0.05	0.883	1.089
	GSM850	GPRS (2 Tx slots)	Edge 1	0.5cm	Normal Battery	OFF	251	848.8	32.07	33.00	1.239	0.01	0.960	1.189
	GSM850	GPRS (2 Tx slots)	Edge 4	0cm	Normal Battery	OFF	128	824.2	32.13	33.00	1.222	-0.03	0.306	0.374
	GSM1900	GPRS (2 Tx slots)	Bottom Face	0cm	Normal Battery	ON	661	1880	27.04	28.00	1.247	-0.01	0.879	1.096
02	GSM1900	GPRS (2 Tx slots)	Bottom Face	0cm	Normal Battery	ON	512	1850.2	26.76	28.00	1.330	0	0.893	**1.188**
	GSM1900	GPRS (2 Tx slots)	Bottom Face	0cm	Normal Battery	ON	810	1909.8	26.78	28.00	1.324	0.03	0.842	1.115
	GSM1900	GPRS (2 Tx slots)	Edge1	0cm	Normal Battery	ON	661	1880	27.04	28.00	1.247	0.03	0.285	0.356
	GSM1900	GPRS (2 Tx slots)	Bottom Face	1.2cm	Normal Battery	OFF	661	1880	29.98	30.00	1.005	-0.02	0.531	0.533
	GSM1900	GPRS (2 Tx slots)	Bottom Face	0cm	Thick Battery	OFF	661	1880	29.98	30.00	1.005	0.16	0.409	0.411
	GSM1900	GPRS (2 Tx slots)	Edge 1	0.5cm	Normal Battery	OFF	661	1880	29.98	30.00	1.005	-0.01	0.378	0.380
	GSM1900	GPRS (2 Tx slots)	Edge 4	0cm	Normal Battery	OFF	661	1880	29.98	30.00	1.005	-0.02	0.152	0.153

<WCDMA SAR>

Plot No.	Band	Mode	Test Position	Gap (cm)	Battery	Power Reduction	Ch.	Freq. (MHz)	Average Power (dBm)	Tune-Up Limit (dBm)	Tune-up Scaling Factor	Power Drift (dB)	Measured 1g SAR (W/kg)	Reported 1g SAR (W/kg)
	WCDMA V	RMC 12.2Kbps	Bottom Face	0cm	Normal Battery	ON	4182	836.4	20.42	21.50	1.282	0.02	0.707	0.907
03	WCDMA V	RMC 12.2Kbps	Bottom Face	0cm	Normal Battery	ON	4132	826.4	20.34	21.50	1.306	0.01	0.703	**0.918**
	WCDMA V	RMC 12.2Kbps	Bottom Face	0cm	Normal Battery	ON	4233	846.6	20.33	21.50	1.309	0.01	0.691	0.905
	WCDMA V	RMC 12.2Kbps	Edge 1	0cm	Normal Battery	ON	4182	836.4	20.42	21.50	1.282	0.05	0.302	0.387
	WCDMA V	RMC 12.2Kbps	Bottom Face	1.2cm	Normal Battery	OFF	4182	836.4	23.64	24.00	1.086	-0.05	0.451	0.490
	WCDMA V	RMC 12.2Kbps	Bottom Face	0cm	Thick Battery	OFF	4182	836.4	23.64	24.00	1.086	-0.03	0.324	0.352
	WCDMA V	RMC 12.2Kbps	Edge 1	0.5cm	Normal Battery	OFF	4182	836.4	23.64	24.00	1.086	0.04	0.411	0.447
	WCDMA V	RMC 12.2Kbps	Edge 4	0cm	Normal Battery	OFF	4182	836.4	23.64	24.00	1.086	0	0.134	0.146
	WCDMA IV	RMC 12.2Kbps	Bottom Face	0cm	Normal Battery	ON	1413	1732.6	19.76	20.50	1.186	-0.01	0.918	1.089
04	WCDMA IV	RMC 12.2Kbps	Bottom Face	0cm	Normal Battery	ON	1312	1712.4	19.70	20.50	1.202	-0.01	0.981	**1.179**
	WCDMA IV	RMC 12.2Kbps	Bottom Face	0cm	Normal Battery	ON	1513	1752.6	19.42	20.50	1.282	-0.01	0.805	1.032
	WCDMA IV	RMC 12.2Kbps	Edge 1	0cm	Normal Battery	ON	1413	1732.6	19.76	20.50	1.186	0.02	0.169	0.200
	WCDMA IV	RMC 12.2Kbps	Bottom Face	1.2cm	Normal Battery	OFF	1413	1732.6	22.78	24.00	1.324	-0.01	0.397	0.526
	WCDMA IV	RMC 12.2Kbps	Bottom Face	0cm	Thick Battery	OFF	1413	1732.6	22.78	24.00	1.324	-0.04	0.310	0.411
	WCDMA IV	RMC 12.2Kbps	Edge 1	0.5cm	Normal Battery	OFF	1413	1732.6	22.78	24.00	1.324	0	0.341	0.452
	WCDMA IV	RMC 12.2Kbps	Edge 4	0cm	Normal Battery	OFF	1413	1732.6	22.78	24.00	1.324	0.01	0.154	0.204
	WCDMA II	RMC 12.2Kbps	Bottom Face	0cm	Normal Battery	ON	9400	1880	20.00	21.00	1.259	-0.06	0.907	1.142
05	WCDMA II	RMC 12.2Kbps	Bottom Face	0cm	Normal Battery	ON	9262	1852.4	19.90	21.00	1.288	0.03	0.923	**1.189**
	WCDMA II	RMC 12.2Kbps	Bottom Face	0cm	Normal Battery	ON	9538	1907.6	19.93	21.00	1.279	0.03	0.905	1.158
	WCDMA II	RMC 12.2Kbps	Edge1	0cm	Normal Battery	ON	9400	1880	20.00	21.00	1.259	-0.03	0.299	0.376
	WCDMA II	RMC 12.2Kbps	Bottom Face	1.2cm	Normal Battery	OFF	9400	1880	22.77	24.00	1.327	0.01	0.388	0.515
	WCDMA II	RMC 12.2Kbps	Bottom Face	0cm	Thick Battery	OFF	9400	1880	22.77	24.00	1.327	-0.04	0.355	0.471
	WCDMA II	RMC 12.2Kbps	Edge 1	0.5cm	Normal Battery	OFF	9400	1880	22.77	24.00	1.327	0.06	0.335	0.445
	WCDMA II	RMC 12.2Kbps	Edge 4	0cm	Normal Battery	OFF	9400	1880	22.77	24.00	1.327	-0.03	0.131	0.174

<CDMA SAR>

Plot No.	Band	Mode	Test Position	Gap (cm)	Battery	Power Reduction	Ch.	Freq. (MHz)	Average Power (dBm)	Tune-Up Limit (dBm)	Tune-up Scaling Factor	Power Drift (dB)	Measured 1g SAR (W/kg)	Reported 1g SAR (W/kg)
06	CDMA2000 BC10	RTAP 153.6Kbps	Bottom Face	0cm	Normal Battery	ON	580	820.5	21.25	21.50	1.059	-0.03	1.120	**1.186**
	CDMA2000 BC10	RTAP 153.6Kbps	Edge 1	0cm	Normal Battery	ON	580	820.5	21.25	21.50	1.059	0.02	0.797	0.844
	CDMA2000 BC10	RTAP 153.6Kbps	Bottom Face	1.2cm	Normal Battery	OFF	580	820.5	23.21	24.50	1.346	-0.04	0.464	0.624
	CDMA2000 BC10	RTAP 153.6Kbps	Bottom Face	0cm	Thick Battery	OFF	580	820.5	23.21	24.50	1.346	0.03	0.327	0.440
	CDMA2000 BC10	RTAP 153.6Kbps	Edge 1	0.5cm	Normal Battery	OFF	580	820.5	23.21	24.50	1.346	0	0.519	0.699
	CDMA2000 BC10	RTAP 153.6Kbps	Edge 4	0.5cm	Normal Battery	OFF	580	820.5	23.21	24.50	1.346	-0.02	0.156	0.210
	CDMA2000 BC0	RTAP 153.6Kbps	Bottom Face	0cm	Normal Battery	ON	1013	824.7	20.64	21.00	1.086	-0.01	1.020	1.108
07	CDMA2000 BC0	RTAP 153.6Kbps	Bottom Face	0cm	Normal Battery	ON	384	836.52	20.59	21.00	1.099	-0.02	1.050	**1.154**
	CDMA2000 BC0	RTAP 153.6Kbps	Bottom Face	0cm	Normal Battery	ON	777	848.31	20.54	21.00	1.112	-0.04	0.994	1.105
	CDMA2000 BC0	RTAP 153.6Kbps	Edge 1	0cm	Normal Battery	ON	1013	824.7	20.64	21.00	1.086	-0.03	0.725	0.788
	CDMA2000 BC0	RTAP 153.6Kbps	Bottom Face	1.2cm	Normal Battery	OFF	384	836.52	23.35	24.50	1.303	0	0.536	0.698
	CDMA2000 BC0	RTAP 153.6Kbps	Bottom Face	0cm	Thick Battery	OFF	384	836.52	23.35	24.50	1.303	-0.06	0.445	0.580
	CDMA2000 BC0	RTAP 153.6Kbps	Edge 1	0.5cm	Normal Battery	OFF	384	836.52	23.35	24.50	1.303	-0.02	0.492	0.641
	CDMA2000 BC0	RTAP 153.6Kbps	Edge 4	0.5cm	Normal Battery	OFF	384	836.52	23.35	24.50	1.303	-0.01	0.149	0.194
08	CDMA2000 BC1	RTAP 153.6Kbps	Bottom Face	0cm	Normal Battery	ON	25	1851.25	20.63	21.00	1.089	-0.01	1.090	**1.187**
	CDMA2000 BC1	RTAP 153.6Kbps	Bottom Face	0cm	Normal Battery	ON	600	1880	20.51	21.00	1.119	0	1.020	1.142
	CDMA2000 BC1	RTAP 153.6Kbps	Bottom Face	0cm	Normal Battery	ON	1175	1908.75	20.38	21.00	1.153	-0.02	0.964	1.112
	CDMA2000 BC1	RTAP 153.6Kbps	Edge 1	0cm	Normal Battery	ON	25	1851.25	20.63	21.00	1.089	-0.05	0.302	0.329
	CDMA2000 BC1	RTAP 153.6Kbps	Bottom Face	1.2cm	Normal Battery	OFF	25	1851.25	23.94	24.50	1.138	-0.09	0.508	0.578
	CDMA2000 BC1	RTAP 153.6Kbps	Bottom Face	0cm	Thick Battery	OFF	25	1851.25	23.94	24.50	1.138	0.01	0.453	0.515
	CDMA2000 BC1	RTAP 153.6Kbps	Edge 1	0.5cm	Normal Battery	OFF	25	1851.25	23.94	24.50	1.138	0.04	0.412	0.469
	CDMA2000 BC1	RTAP 153.6Kbps	Edge 4	0cm	Normal Battery	OFF	25	1851.25	23.94	24.50	1.138	-0.03	0.160	0.182

<LTE SAR>

Plot No.	Band	BW (MHz)	Modulation	RB Size	RB offset	Test Position	Gap (cm)	Battery	Power Reduction	Ch.	Freq. (MHz)	Average Power (dBm)	Tune-Up Limit (dBm)	Tune-up Scaling Factor	Power Drift (dB)	Measured 1g SAR (W/kg)	Reported 1g SAR (W/kg)
	LTE Band 17	10M	QPSK	1RB	0offset	Bottom Face	0cm	Normal Battery	ON	23790	710	21.60	22.50	1.230	-0.01	0.851	1.047
09	LTE Band 17	10M	QPSK	25RB	0offset	Bottom Face	0cm	Normal Battery	ON	23790	710	21.18	22.50	1.355	0.07	0.819	**1.110**
	LTE Band 17	10M	QPSK	50RB	0offset	Bottom Face	0cm	Normal Battery	ON	23790	710	21.06	22.50	1.393	-0.04	0.787	1.096
	LTE Band 17	10M	QPSK	1RB	0offset	Edge 1	0cm	Normal Battery	ON	23790	710	21.60	22.50	1.230	0.03	0.271	0.333
	LTE Band 17	10M	QPSK	25RB	0offset	Edge 1	0cm	Normal Battery	ON	23790	710	21.18	22.50	1.355	0.01	0.257	0.348
	LTE Band 17	10M	QPSK	1RB	0offset	Bottom Face	1.2cm	Normal Battery	OFF	23790	710	22.43	24.00	1.435	0.07	0.222	0.319
	LTE Band 17	10M	QPSK	25RB	0offset	Bottom Face	1.2cm	Normal Battery	OFF	23790	710	21.45	23.00	1.429	0.09	0.185	0.264
	LTE Band 17	10M	QPSK	1RB	0offset	Bottom Face	0cm	Thick Battery	OFF	23790	710	22.43	24.00	1.435	0.07	0.191	0.274
	LTE Band 17	10M	QPSK	25RB	0offset	Bottom Face	0cm	Thick Battery	OFF	23790	710	21.45	23.00	1.429	-0.01	0.156	0.223
	LTE Band 17	10M	QPSK	1RB	0offset	Edge 1	0.5cm	Normal Battery	OFF	23790	710	22.43	24.00	1.435	0.08	0.162	0.233
	LTE Band 17	10M	QPSK	25RB	0offset	Edge 1	0.5cm	Normal Battery	OFF	23790	710	21.45	23.00	1.429	0.04	0.139	0.199
	LTE Band 17	10M	QPSK	1RB	0offset	Edge 4	0cm	Normal Battery	OFF	23790	710	22.43	24.00	1.435	0.03	0.066	0.095
	LTE Band 17	10M	QPSK	25RB	0offset	Edge 4	0cm	Normal Battery	OFF	23790	710	21.45	23.00	1.429	0.09	0.055	0.079
	LTE Band 13	10M	QPSK	1RB	0offset	Bottom Face	0cm	Normal Battery	ON	23230	782	20.27	20.50	1.054	-0.07	1.040	1.097
	LTE Band 13	10M	QPSK	25RB	0offset	Bottom Face	0cm	Normal Battery	ON	23230	782	20.09	20.50	1.099	0.01	1.050	1.154
10	LTE Band 13	10M	QPSK	50RB	0offset	Bottom Face	0cm	Normal Battery	ON	23230	782	19.97	20.50	1.130	0.01	1.040	**1.175**
	LTE Band 13	10M	QPSK	1RB	0offset	Edge 1	0cm	Normal Battery	ON	23230	782	20.27	20.50	1.054	0	0.434	0.458
	LTE Band 13	10M	QPSK	25RB	0offset	Edge 1	0cm	Normal Battery	ON	23230	782	20.09	20.50	1.099	0	0.450	0.495
	LTE Band 13	10M	QPSK	1RB	0offset	Bottom Face	1.2cm	Normal Battery	OFF	23230	782	22.33	24.00	1.469	0.02	0.377	0.554
	LTE Band 13	10M	QPSK	25RB	0offset	Bottom Face	1.2cm	Normal Battery	OFF	23230	782	21.33	23.00	1.469	0.01	0.314	0.461
	LTE Band 13	10M	QPSK	1RB	0offset	Bottom Face	0cm	Thick Battery	OFF	23230	782	22.33	24.00	1.469	0.01	0.293	0.430
	LTE Band 13	10M	QPSK	25RB	0offset	Bottom Face	0cm	Thick Battery	OFF	23230	782	21.33	23.00	1.469	0	0.247	0.363
	LTE Band 13	10M	QPSK	1RB	0offset	Edge 1	0.5cm	Normal Battery	OFF	23230	782	22.33	24.00	1.469	0.02	0.302	0.444
	LTE Band 13	10M	QPSK	25RB	0offset	Edge 1	0.5cm	Normal Battery	OFF	23230	782	21.33	23.00	1.469	-0.01	0.221	0.325
	LTE Band 13	10M	QPSK	1RB	0offset	Edge 4	0cm	Normal Battery	OFF	23230	782	22.33	24.00	1.469	-0.08	0.086	0.126
	LTE Band 13	10M	QPSK	25RB	0offset	Edge 4	0cm	Normal Battery	OFF	23230	782	21.33	23.00	1.469	0	0.071	0.104

Plot No.	Band	BW (MHz)	Modulation	RB Size	RB offset	Test Position	Gap (cm)	Battery	Power Reduction	Ch.	Freq. (MHz)	Average Power (dBm)	Tune-Up Limit (dBm)	Tune-up Scaling Factor	Power Drift (dB)	Measured 1g SAR (W/kg)	Reported 1g SAR (W/kg)
	LTE Band 5	10M	QPSK	1RB	0offset	Bottom Face	0cm	Normal Battery	ON	20525	836.5	21.09	21.50	1.099	-0.01	0.923	1.014
	LTE Band 5	10M	QPSK	1RB	0offset	Bottom Face	0cm	Normal Battery	ON	20450	829	20.95	21.50	1.135	0	0.904	1.026
	LTE Band 5	10M	QPSK	1RB	0offset	Bottom Face	0cm	Normal Battery	ON	20600	844	20.97	21.50	1.130	0	0.944	1.067
	LTE Band 5	10M	QPSK	25RB	0offset	Bottom Face	0cm	Normal Battery	ON	20525	836.5	20.94	21.50	1.138	-0.01	0.920	1.047
	LTE Band 5	10M	QPSK	25RB	0offset	Bottom Face	0cm	Normal Battery	ON	20450	829	20.89	21.50	1.151	-0.02	0.902	1.038
	LTE Band 5	10M	QPSK	25RB	0offset	Bottom Face	0cm	Normal Battery	ON	20600	844	20.87	21.50	1.156	0	0.922	1.066
11	LTE Band 5	10M	QPSK	50RB	0offset	Bottom Face	0cm	Normal Battery	ON	20525	836.5	20.77	21.50	1.183	-0.02	0.903	**1.068**
	LTE Band 5	10M	QPSK	1RB	0offset	Edge 1	0cm	Normal Battery	ON	20525	836.5	21.09	21.50	1.099	-0.01	0.402	0.442
	LTE Band 5	10M	QPSK	25RB	0offset	Edge 1	0cm	Normal Battery	ON	20525	836.5	20.94	21.50	1.138	0.01	0.385	0.438
	LTE Band 5	10M	QPSK	1RB	0offset	Bottom Face	1.2cm	Normal Battery	OFF	20525	836.5	23.11	24.00	1.227	0.02	0.401	0.492
	LTE Band 5	10M	QPSK	25RB	0offset	Bottom Face	1.2cm	Normal Battery	OFF	20525	836.5	22.06	23.00	1.242	-0.03	0.320	0.397
	LTE Band 5	10M	QPSK	1RB	0offset	Bottom Face	0cm	Thick Battery	OFF	20525	836.5	23.11	24.00	1.227	0	0.312	0.383
	LTE Band 5	10M	QPSK	25RB	0offset	Bottom Face	0cm	Thick Battery	OFF	20525	836.5	22.06	23.00	1.242	0	0.252	0.313
	LTE Band 5	10M	QPSK	1RB	0offset	Edge 1	0.5cm	Normal Battery	OFF	20525	836.5	23.11	24.00	1.227	0.03	0.408	0.501
	LTE Band 5	10M	QPSK	25RB	0offset	Edge 1	0.5cm	Normal Battery	OFF	20525	836.5	22.06	23.00	1.242	0.02	0.337	0.418
	LTE Band 5	10M	QPSK	1RB	0offset	Edge 4	0cm	Normal Battery	OFF	20525	836.5	23.11	24.00	1.227	0	0.129	0.158
	LTE Band 5	10M	QPSK	25RB	0offset	Edge 4	0cm	Normal Battery	OFF	20525	836.5	22.06	23.00	1.242	-0.06	0.095	0.118
	LTE Band 4	20M	QPSK	1RB	0offset	Bottom Face	0cm	Normal Battery	ON	20050	1720	19.60	20.50	1.230	-0.02	0.853	1.049
	LTE Band 4	20M	QPSK	1RB	0offset	Bottom Face	0cm	Normal Battery	ON	20175	1732.5	19.55	20.50	1.245	0.03	0.828	1.030
	LTE Band 4	20M	QPSK	1RB	0offset	Bottom Face	0cm	Normal Battery	ON	20300	1745	19.52	20.50	1.253	-0.01	0.793	0.994
12	LTE Band 4	20M	QPSK	50RB	0offset	Bottom Face	0cm	Normal Battery	ON	20050	1720	19.32	20.50	1.312	-0.1	0.839	**1.101**
	LTE Band 4	20M	QPSK	50RB	0offset	Bottom Face	0cm	Normal Battery	ON	20175	1732.5	19.30	20.50	1.318	0.01	0.811	1.069
	LTE Band 4	20M	QPSK	50RB	0offset	Bottom Face	0cm	Normal Battery	ON	20300	1745	19.24	20.50	1.337	0.04	0.757	1.012
	LTE Band 4	20M	QPSK	100RB	0offset	Bottom Face	0cm	Normal Battery	ON	20050	1720	19.28	20.50	1.324	0	0.829	1.098
	LTE Band 4	20M	QPSK	1RB	0offset	Edge 1	0cm	Normal Battery	ON	20050	1720	19.60	20.50	1.230	0.01	0.264	0.325
	LTE Band 4	20M	QPSK	50RB	0offset	Edge 1	0cm	Normal Battery	ON	20050	1720	19.32	20.50	1.312	0	0.255	0.335
	LTE Band 4	20M	QPSK	1RB	0offset	Bottom Face	1.2cm	Normal Battery	OFF	20175	1732.5	22.58	24.00	1.387	-0.03	0.394	0.546
	LTE Band 4	20M	QPSK	50RB	0offset	Bottom Face	1.2cm	Normal Battery	OFF	20175	1732.5	21.22	23.00	1.507	0.01	0.304	0.458
	LTE Band 4	20M	QPSK	1RB	0offset	Bottom Face	0cm	Thick Battery	OFF	20175	1732.5	22.58	24.00	1.387	-0.01	0.296	0.410
	LTE Band 4	20M	QPSK	50RB	0offset	Bottom Face	0cm	Thick Battery	OFF	20175	1732.5	21.22	23.00	1.507	-0.01	0.229	0.345
	LTE Band 4	20M	QPSK	1RB	0offset	Edge 1	0.5cm	Normal Battery	OFF	20175	1732.5	22.58	24.00	1.387	0	0.367	0.509
	LTE Band 4	20M	QPSK	50RB	0offset	Edge 1	0.5cm	Normal Battery	OFF	20175	1732.5	21.22	23.00	1.507	0	0.278	0.419
	LTE Band 4	20M	QPSK	1RB	0offset	Edge 4	0cm	Normal Battery	OFF	20175	1732.5	22.58	24.00	1.387	-0.02	0.166	0.230
	LTE Band 4	20M	QPSK	50RB	0offset	Edge 4	0cm	Normal Battery	OFF	20175	1732.5	21.22	23.00	1.507	0.07	0.121	0.182
	LTE Band 2	20M	QPSK	1RB	0offset	Bottom Face	0cm	Normal Battery	ON	18700	1860	19.61	20.50	1.227	0.08	0.805	0.988
13	LTE Band 2	20M	QPSK	1RB	0offset	Bottom Face	0cm	Normal Battery	ON	18900	1880	19.53	20.50	1.250	0.03	0.802	**1.003**
	LTE Band 2	20M	QPSK	1RB	0offset	Bottom Face	0cm	Normal Battery	ON	19100	1900	19.43	20.50	1.279	0.02	0.775	0.992
	LTE Band 2	20M	QPSK	50RB	0offset	Bottom Face	0cm	Normal Battery	ON	18700	1860	19.35	20.50	1.303	0	0.751	0.979
	LTE Band 2	20M	QPSK	50RB	0offset	Bottom Face	0cm	Normal Battery	ON	18900	1880	19.29	20.50	1.321	0.06	0.732	0.967
	LTE Band 2	20M	QPSK	50RB	0offset	Bottom Face	0cm	Normal Battery	ON	19100	1900	19.16	20.50	1.361	0.03	0.716	0.975
	LTE Band 2	20M	QPSK	100RB	0offset	Bottom Face	0cm	Normal Battery	ON	18700	1860	19.28	20.50	1.324	0	0.680	0.901
	LTE Band 2	20M	QPSK	1RB	0offset	Edge 1	0cm	Normal Battery	ON	18700	1860	19.61	20.50	1.227	0.08	0.235	0.288
	LTE Band 2	20M	QPSK	50RB	0offset	Edge 1	0cm	Normal Battery	ON	18700	1860	19.35	20.50	1.303	0	0.224	0.292
	LTE Band 2	20M	QPSK	1RB	0offset	Bottom Face	1.2cm	Normal Battery	OFF	18700	1860	22.64	24.00	1.368	-0.02	0.403	0.551
	LTE Band 2	20M	QPSK	50RB	0offset	Bottom Face	1.2cm	Normal Battery	OFF	18700	1860	21.27	23.00	1.489	0.08	0.302	0.450
	LTE Band 2	20M	QPSK	1RB	0offset	Bottom Face	0cm	Thick Battery	OFF	18700	1860	22.64	24.00	1.368	0.03	0.353	0.483
	LTE Band 2	20M	QPSK	50RB	0offset	Bottom Face	0cm	Thick Battery	OFF	18700	1860	21.27	23.00	1.489	0.03	0.269	0.401
	LTE Band 2	20M	QPSK	1RB	0offset	Edge1	0.5cm	Normal Battery	OFF	18700	1860	22.64	24.00	1.368	0	0.338	0.462
	LTE Band 2	20M	QPSK	50RB	0offset	Edge1	0.5cm	Normal Battery	OFF	18700	1860	21.27	23.00	1.489	0.02	0.252	0.375
	LTE Band 2	20M	QPSK	1RB	0offset	Edge4	0cm	Normal Battery	OFF	18700	1860	22.64	24.00	1.368	0.01	0.140	0.191
	LTE Band 2	20M	QPSK	50RB	0offset	Edge4	0cm	Normal Battery	OFF	18700	1860	21.27	23.00	1.489	0.04	0.107	0.159

Plot No.	Band	BW (MHz)	Modulation	RB Size	RB offset	Test Position	Gap (cm)	Battery	Power Reduction	Ch.	Freq. (MHz)	Average Power (dBm)	Tune-Up Limit (dBm)	Tune-up Scaling Factor	Power Drift (dB)	Measured 1g SAR (W/kg)	Reported 1g SAR (W/kg)
	LTE Band 25	20M	QPSK	1RB	0offset	Bottom Face	0cm	Normal Battery	ON	26140	1860	19.59	20.50	1.233	0.03	0.785	0.968
14	LTE Band 25	20M	QPSK	1RB	0offset	Bottom Face	0cm	Normal Battery	ON	26340	1880	19.44	20.50	1.276	-0.02	0.764	**0.975**
	LTE Band 25	20M	QPSK	1RB	0offset	Bottom Face	0cm	Normal Battery	ON	26590	1905	19.38	20.50	1.294	-0.07	0.738	0.955
	LTE Band 25	20M	QPSK	50RB	0offset	Bottom Face	0cm	Normal Battery	ON	26140	1860	19.35	20.50	1.303	0.04	0.731	0.953
	LTE Band 25	20M	QPSK	50RB	0offset	Bottom Face	0cm	Normal Battery	ON	26340	1880	19.29	20.50	1.321	-0.01	0.717	0.947
	LTE Band 25	20M	QPSK	50RB	0offset	Bottom Face	0cm	Normal Battery	ON	26590	1880	19.18	20.50	1.355	0.01	0.674	0.913
	LTE Band 25	20M	QPSK	100RB	0offset	Bottom Face	0cm	Normal Battery	ON	26140	1860	19.30	20.50	1.318	0.01	0.732	0.965
	LTE Band 25	20M	QPSK	1RB	0offset	Edge 1	0cm	Normal Battery	ON	26140	1860	19.59	20.50	1.233	0.01	0.230	0.284
	LTE Band 25	20M	QPSK	50RB	0offset	Edge 1	0cm	Normal Battery	ON	26140	1860	19.35	20.50	1.303	0.01	0.219	0.285
	LTE Band 25	20M	QPSK	1RB	0offset	Bottom Face	1.2cm	Normal Battery	OFF	26140	1860	22.54	24.00	1.400	-0.05	0.453	0.634
	LTE Band 25	20M	QPSK	50RB	0offset	Bottom Face	1.2cm	Normal Battery	OFF	26140	1860	21.25	23.00	1.496	-0.06	0.336	0.503
	LTE Band 25	20M	QPSK	1RB	0offset	Bottom Face	0cm	Thick Battery	OFF	26140	1860	22.54	24.00	1.400	0.05	0.351	0.491
	LTE Band 25	20M	QPSK	50RB	0offset	Bottom Face	0cm	Thick Battery	OFF	26140	1860	21.25	23.00	1.496	-0.03	0.266	0.398
	LTE Band 25	20M	QPSK	1RB	0offset	Edge 1	0.5cm	Normal Battery	OFF	26140	1860	22.54	24.00	1.400	0.03	0.145	0.203
	LTE Band 25	20M	QPSK	50RB	0offset	Edge 1	0.5cm	Normal Battery	OFF	26140	1860	21.25	23.00	1.496	0.04	0.138	0.206
	LTE Band 25	20M	QPSK	1RB	0offset	Edge 4	0cm	Normal Battery	OFF	26140	1860	22.54	24.00	1.400	0.03	0.142	0.199
	LTE Band 25	20M	QPSK	50RB	0offset	Edge 4	0cm	Normal Battery	OFF	26140	1860	21.25	23.00	1.496	0.05	0.107	0.160

15.2 Repeated SAR Measurement

No.	Band	Mode	Test Position	Gap (cm)	Battery	Power Reduction	Ch.	Freq. (MHz)	Average Power (dBm)	Tune-Up Limit (dBm)	Tune-up Scaling Factor	Power Drift (dB)	Measured 1g SAR (W/kg)	Ratio	Reported 1g SAR (W/kg)
1st	GSM850	GPRS (2 Tx slots)	Bottom Face	0cm	Normal Battery	ON	251	848.8	27.25	27.50	1.059	-0.04	1.130	-	1.197
2nd	GSM850	GPRS (2 Tx slots)	Bottom Face	0cm	Normal Battery	ON	251	848.8	27.25	27.50	1.059	-0.02	1.120	1.01	1.186
1st	WCDMA IV	RMC 12.2Kbps	Bottom Face	0cm	Normal Battery	ON	1312	1712.4	19.70	20.50	1.202	-0.01	0.981	-	1.179
2nd	WCDMA IV	RMC 12.2Kbps	Bottom Face	0cm	Normal Battery	ON	1312	1712.4	19.70	20.50	1.202	0.02	0.966	1.02	1.161
1st	CDMA2000 BC1	RTAP 153.6Kbps	Bottom Face	0cm	Normal Battery	ON	25	1851.25	20.63	21.00	1.089	-0.01	1.090	-	1.187
2nd	CDMA2000 BC1	RTAP 153.6Kbps	Bottom Face	0cm	Normal Battery	ON	25	1851.25	20.63	21.00	1.089	0	1.040	1.05	1.132

No.	Band	BW (MHz)	Modulation	RB Size	RB offset	Test Position	Gap (cm)	Battery	Power Reduction	Ch.	Freq. (MHz)	Average Power (dBm)	Tune-Up Limit (dBm)	Tune-up Scaling Factor	Power Drift (dB)	Measured 1g SAR (W/kg)	Ratio	Reported 1g SAR (W/kg)
1st	LTE Band 13	10M	QPSK	25RB	0offset	Bottom Face	0cm	Normal Battery	ON	23230	782	20.09	20.50	1.099	0.01	1.050	-	1.154
2nd	LTE Band 13	10M	QPSK	25RB	0offset	Bottom Face	0cm	Normal Battery	ON	23230	782	20.09	20.50	1.099	-0.13	1.030	1.02	1.132

General Note:

1. Per KDB 865664 D01v01r03, for each frequency band, repeated SAR measurement is required only when the measured SAR is ≥0.8W/kg
2. Per KDB 865664 D01v01r03, if the ratio among the repeated measurement is ≤ 1.2 and the measured SAR <1.45W/kg, only one repeated measurement is required.
3. The ratio is the difference in percentage between original and repeated *measured SAR*.
4. All measurement SAR result is scaled-up to account for tune-up tolerance and is compliant.

Test Engineer： Poa Pan, Kurt Liu, Mood Huang, San Lin, Bevis Chang, Tommy Chen, Jack Wu, Nick Yu and Angelo Chang

16. Uncertainty Assessment

The component of uncertainly may generally be categorized according to the methods used to evaluate them. The evaluation of uncertainly by the statistical analysis of a series of observations is termed a Type An evaluation of uncertainty. The evaluation of uncertainty by means other than the statistical analysis of a series of observation is termed a Type B evaluation of uncertainty. Each component of uncertainty, however evaluated, is represented by an estimated standard deviation, termed standard uncertainty, which is determined by the positive square root of the estimated variance.

A Type A evaluation of standard uncertainty may be based on any valid statistical method for treating data. This includes calculating the standard deviation of the mean of a series of independent observations; using the method of least squares to fit a curve to the data in order to estimate the parameter of the curve and their standard deviations; or carrying out an analysis of variance in order to identify and quantify random effects in certain kinds of measurement.

A type B evaluation of standard uncertainty is typically based on scientific judgment using all of the relevant information available. These may include previous measurement data, experience, and knowledge of the behavior and properties of relevant materials and instruments, manufacture's specification, data provided in calibration reports and uncertainties assigned to reference data taken from handbooks. Broadly speaking, the uncertainty is either obtained from an outdoor source or obtained from an assumed distribution, such as the normal distribution, rectangular or triangular distributions indicated in table below.

Uncertainty Distributions	Normal	Rectangular	Triangular	U-Shape
Multi-plying Factor[(a)]	1/k[(b)]	1/√3	1/√6	1/√2

(a) standard uncertainty is determined as the product of the multiplying factor and the estimated range of variations in the measured quantity

(b) κ is the coverage factor

Table 17.1. Standard Uncertainty for Assumed Distribution

The combined standard uncertainty of the measurement result represents the estimated standard deviation of the result. It is obtained by combining the individual standard uncertainties of both Type A and Type B evaluation using the usual "root-sum-squares" (RSS) methods of combining standard deviations by taking the positive square root of the estimated variances.

Expanded uncertainty is a measure of uncertainty that defines an interval about the measurement result within which the measured value is confidently believed to lie. It is obtained by multiplying the combined standard uncertainty by a coverage factor. Typically, the coverage factor ranges from 2 to 3. Using a coverage factor allows the true value of a measured quantity to be specified with a defined probability within the specified uncertainty range. For purpose of this document, a coverage factor two is used, which corresponds to confidence interval of about 95 %. The DASY uncertainty Budget is shown in the following tables.

Error Description	Uncertainty Value (±%)	Probability Distribution	Divisor	Ci (1g)	Ci (10g)	Standard Uncertainty (1g)	Standard Uncertainty (10g)
Measurement System							
Probe Calibration	6.0	Normal	1	1	1	± 6.0 %	± 6.0 %
Axial Isotropy	4.7	Rectangular	√3	0.7	0.7	± 1.9 %	± 1.9 %
Hemispherical Isotropy	9.6	Rectangular	√3	0.7	0.7	± 3.9 %	± 3.9 %
Boundary Effects	1.0	Rectangular	√3	1	1	± 0.6 %	± 0.6 %
Linearity	4.7	Rectangular	√3	1	1	± 2.7 %	± 2.7 %
System Detection Limits	1.0	Rectangular	√3	1	1	± 0.6 %	± 0.6 %
Readout Electronics	0.3	Normal	1	1	1	± 0.3 %	± 0.3 %
Response Time	0.8	Rectangular	√3	1	1	± 0.5 %	± 0.5 %
Integration Time	2.6	Rectangular	√3	1	1	± 1.5 %	± 1.5 %
RF Ambient Noise	3.0	Rectangular	√3	1	1	± 1.7 %	± 1.7 %
RF Ambient Reflections	3.0	Rectangular	√3	1	1	± 1.7 %	± 1.7 %
Probe Positioner	0.4	Rectangular	√3	1	1	± 0.2 %	± 0.2 %
Probe Positioning	2.9	Rectangular	√3	1	1	± 1.7 %	± 1.7 %
Max. SAR Eval.	1.0	Rectangular	√3	1	1	± 0.6 %	± 0.6 %
Test Sample Related							
Device Positioning	2.9	Normal	1	1	1	± 2.9 %	± 2.9 %
Device Holder	3.6	Normal	1	1	1	± 3.6 %	± 3.6 %
Power Drift	5.0	Rectangular	√3	1	1	± 2.9 %	± 2.9 %
Phantom and Setup							
Phantom Uncertainty	4.0	Rectangular	√3	1	1	± 2.3 %	± 2.3 %
Liquid Conductivity (Target)	5.0	Rectangular	√3	0.64	0.43	± 1.8 %	± 1.2 %
Liquid Conductivity (Meas.)	2.5	Normal	1	0.64	0.43	± 1.6 %	± 1.1 %
Liquid Permittivity (Target)	5.0	Rectangular	√3	0.6	0.49	± 1.7 %	± 1.4 %
Liquid Permittivity (Meas.)	2.5	Normal	1	0.6	0.49	± 1.5 %	± 1.2 %
Combined Standard Uncertainty						± 11.0 %	± 10.8 %
Coverage Factor for 95 %						K=2	
Expanded Uncertainty						**± 22.0 %**	**± 21.5 %**

Table 17.2. Uncertainty Budget for frequency range 300 MHz to 3 GHz

Error Description	Uncertainty Value (±%)	Probability Distribution	Divisor	Ci (1g)	Ci (10g)	Standard Uncertainty (1g)	Standard Uncertainty (10g)
Measurement System							
Probe Calibration	6.55	Normal	1	1	1	± 6.55 %	± 6.55 %
Axial Isotropy	4.7	Rectangular	√3	0.7	0.7	± 1.9 %	± 1.9 %
Hemispherical Isotropy	9.6	Rectangular	√3	0.7	0.7	± 3.9 %	± 3.9 %
Boundary Effects	2.0	Rectangular	√3	1	1	± 1.2 %	± 1.2 %
Linearity	4.7	Rectangular	√3	1	1	± 2.7 %	± 2.7 %
System Detection Limits	1.0	Rectangular	√3	1	1	± 0.6 %	± 0.6 %
Readout Electronics	0.3	Normal	1	1	1	± 0.3 %	± 0.3 %
Response Time	0.8	Rectangular	√3	1	1	± 0.5 %	± 0.5 %
Integration Time	2.6	Rectangular	√3	1	1	± 1.5 %	± 1.5 %
RF Ambient Noise	3.0	Rectangular	√3	1	1	± 1.7 %	± 1.7 %
RF Ambient Reflections	3.0	Rectangular	√3	1	1	± 1.7 %	± 1.7 %
Probe Positioner	0.8	Rectangular	√3	1	1	± 0.5 %	± 0.5 %
Probe Positioning	9.9	Rectangular	√3	1	1	± 5.7 %	± 5.7 %
Max. SAR Eval.	4.0	Rectangular	√3	1	1	± 2.3 %	± 2.3 %
Test Sample Related							
Device Positioning	2.9	Normal	1	1	1	± 2.9 %	± 2.9 %
Device Holder	3.6	Normal	1	1	1	± 3.6 %	± 3.6 %
Power Drift	5.0	Rectangular	√3	1	1	± 2.9 %	± 2.9 %
Phantom and Setup							
Phantom Uncertainty	4.0	Rectangular	√3	1	1	± 2.3 %	± 2.3 %
Liquid Conductivity (Target)	5.0	Rectangular	√3	0.64	0.43	± 1.8 %	± 1.2 %
Liquid Conductivity (Meas.)	2.5	Normal	1	0.64	0.43	± 1.6 %	± 1.1 %
Liquid Permittivity (Target)	5.0	Rectangular	√3	0.6	0.49	± 1.7 %	± 1.4 %
Liquid Permittivity (Meas.)	2.5	Normal	1	0.6	0.49	± 1.5 %	± 1.2 %
Combined Standard Uncertainty						± 12.8 %	± 12.6 %
Coverage Factor for 95 %						K=2	
Expanded Uncertainty						**± 25.6 %**	**± 25.2 %**

Table 17.3. Uncertainty Budget for frequency range 3 GHz to 6 GHz

17. References

[1] FCC 47 CFR Part 2 “Frequency Allocations and Radio Treaty Matters; General Rules and Regulations”

[2] ANSI/IEEE Std. C95.1-1992, “IEEE Standard for Safety Levels with Respect to Human Exposure to Radio Frequency Electromagnetic Fields, 3 kHz to 300 GHz”, September 1992

[3] IEEE Std. 1528-2003, “Recommended Practice for Determining the Peak Spatial-Average Specific Absorption Rate (SAR) in the Human Head from Wireless Communications Devices: Measurement Techniques”, December 2003

[4] SPEAG DASY System Handbook

[5] FCC KDB 248227 D01 v01r02, “SAR Measurement Procedures for 802.11 a/b/g Transmitters”, May 2007

[6] FCC KDB 447498 D01 v05r02, “Mobile and Portable Device RF Exposure Procedures and Equipment Authorization Policies”, Feb 2014

[7] FCC KDB 941225 D01 v03, “3G SAR MEAUREMENT PROCEDURES”, Oct 2014

[8] FCC KDB 941225 D05 v02r03, “SAR Evaluation Considerations for LTE Devices”, Dec 2013

[9] FCC KDB 616217 D04 v01r01, “SAR Evaluation Considerations for Laptop, Notebook, Netbook and Tablet Computers”, May 2013

[10] FCC KDB 865664 D01 v01r03, "SAR Measurement Requirements for 100 MHz to 6 GHz", Feb 2014.

[11] FCC KDB 865664 D02 v01r01, “RF Exposure Compliance Reporting and Documentation Considerations” May 2013.