CRAFTMADE™

READ THESE INSTRUCTIONS AND AND SAVE THEM FOR FUTURE USE

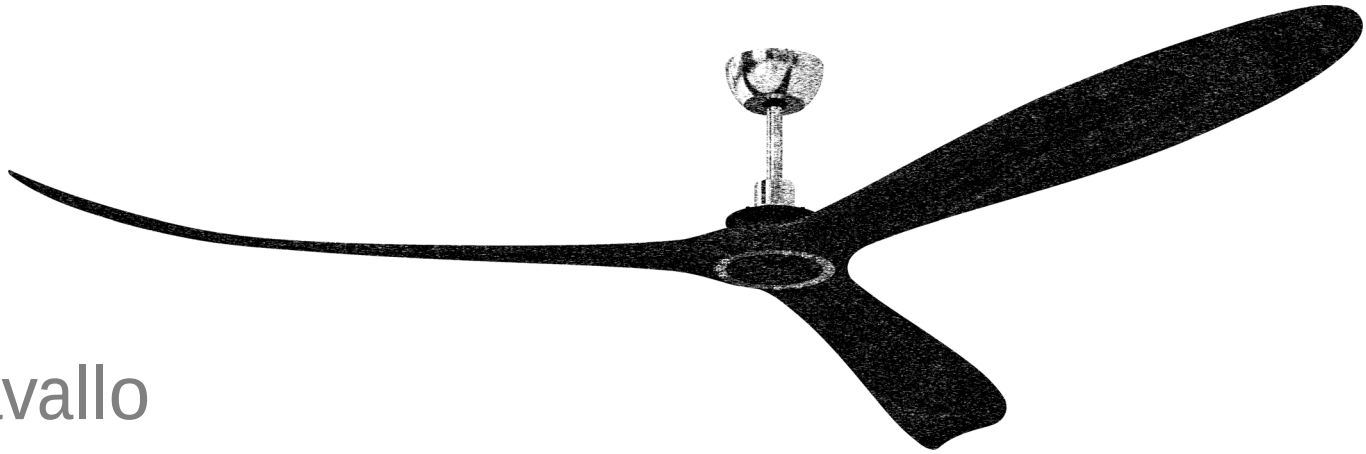

Cavallo

Installation Guide

For Model:
CVL100

WARNING
DC Motor will not operate until blades are installed

C UL US
LISTED
For
Damp Location

net weight of fan: 11.46 lb (5.2 kg)

Table of Contents:

Safety Tips. pg. 1
Unpacking Your Fan. pg. 2
Parts Inventory. pg. 2
Installation Preparation. pg. 3
Hanging Bracket Installation. pg. 3
Blade* Assembly. pg. 4
Fan Assembly. pgs. 4 - 6
Wiring. pgs. 6 - 7
Canopy Assembly. pg. 7
Automated Learning Process./ Activating Code. pg. 8
Testing Your Fan. pg. 9
Troubleshooting. pg. 10
Parts Replacement. pg. 10
Warranty. pg. 10

*sold separately

PRINTED IN CHINA

SAFETY TIPS.

WARNING: To reduce the risk of electrical shock, turn off the electricity to the fan at the main fuse box or circuit panel before you begin the fan installation or before servicing the fan or installing accessories.

1. **READ ALL INSTRUCTIONS AND SAFETY INFORMATION CAREFULLY BEFORE INSTALLING YOUR FAN AND SAVE THESE INSTRUCTIONS.**

CAUTION: To avoid personal injury, the use of gloves may be necessary while handling fan parts with sharp edges.

2. Make sure all electrical connections comply with Local Codes or Ordinances, the National Electrical Code, and ANSI/NFPA 70-1999. If you are unfamiliar with electrical wiring or if the house/building wires are different colors than those referred to in the instructions, please use a qualified electrician.
3. Make sure you have a location selected for your fan that allows clear space for the blades to rotate, and at least ten (10) feet (3.05 meters) of clearance between the floor and the fan blade tips. The fan should be mounted so that the tips of the blades are at least thirty (30) inches (76 centimeters) from walls or other upright structures.
4. The outlet box and ceiling support joist used must be securely mounted, and capable of supporting at least 35 pounds (16 kilograms). The outlet box must be supported directly by the building structure. Use only CUL (Canada) or UL (USA) listed outlet boxes marked "FOR FAN SUPPORT."

WARNING: To reduce the risk of fire, electrical shock, or personal injury, mount to the outlet box marked "Acceptable for Fan Support of 15.9 kg (35 lbs.) or less," and use the mounting screws provided with the outlet box. Most outlet boxes commonly used for the support of lighting fixtures are not acceptable for fan support and may need to be replaced. Consult a qualified electrician if in doubt.

WARNING: To reduce the risk of fire, electrical shock, or personal injury, wire connectors provided with this fan are designed to accept only one12 gauge house wire and two lead wires from the fan. If your house wire is larger than 12 gauge or there is more than one house wire to connect to the corresponding fan lead wires, consult an electrician for the proper size wire connectors to use.

5. Electrical diagrams are for reference only.
6. After installation is complete, check that all connections are absolutely secure.
7. After making electrical connections, spliced conductors should be turned upward and pushed carefully up into the outlet box. The wires should be spread apart with the grounded conductor and the equipment-grounding conductor on opposite sides of the outlet box.

WARNING: To reduce the risk of electrical shock or fire, do not use this fan with any solid state speed control device or control fan speed with a full range dimmer switch. [Using a full range dimmer switch to control fan speed will cause a loud humming noise from fan.]

8. Do not insert anything between the fan blades while they are rotating.

WARNING: To reduce the risk of personal injury, do not bend the blade arms during assembly or after installation. Do not insert objects into the path of the blades.

WARNING: To avoid personal injury or damage to the fan and other items, be cautious when working around or cleaning the fan.

9. Do not use water or detergents when cleaning the fan or fan blades. A dry dust cloth or lightly dampened cloth will be suitable for most cleaning.

WARNING: To reduce the risk of personal injury, use **only** parts provided with this fan. **The use of parts OTHER than those provided with this fan will void the warranty.**

WARNING: This fan MUST be installed with the safety cable provided with the fan. Failure to use the safety cable provided may result in personal injury, damage to the fan or damage to other property.

NOTE: The important safety precautions and instructions appearing in the manual are not meant to cover all possible conditions and situations that may occur. It must be understood that common sense and caution are necessary factors in the installation and operation of this fan.

1. Unpacking Your Fan.

Carefully open the packaging. Remove items from Styrofoam inserts. Remove motor housing and place on carpet or Styrofoam to avoid damage to finish. Do not discard fan carton or Styrofoam inserts should this fan need to be returned for repairs.
Check against parts inventory that all parts have been included.

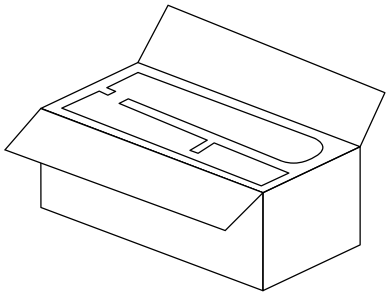

2. Parts Inventory.

a. hanging bracket (pre-attached to canopy). 1 piece

b. downrod and hanging ball. 1 piece

c. canopy. 1 piece

d. yoke cover. 1 piece

e. motor housing. 1 piece

f. remote control receiver. 1 piece

g. control panel. 2 pieces

h. plate. 2 pieces

i. remote control cover. 2 separate pieces

j. faceplate. 3 pieces

k. blades ring. 1 piece

l. blade*. 3 pieces

m. hardware packs

*Blades are not included.

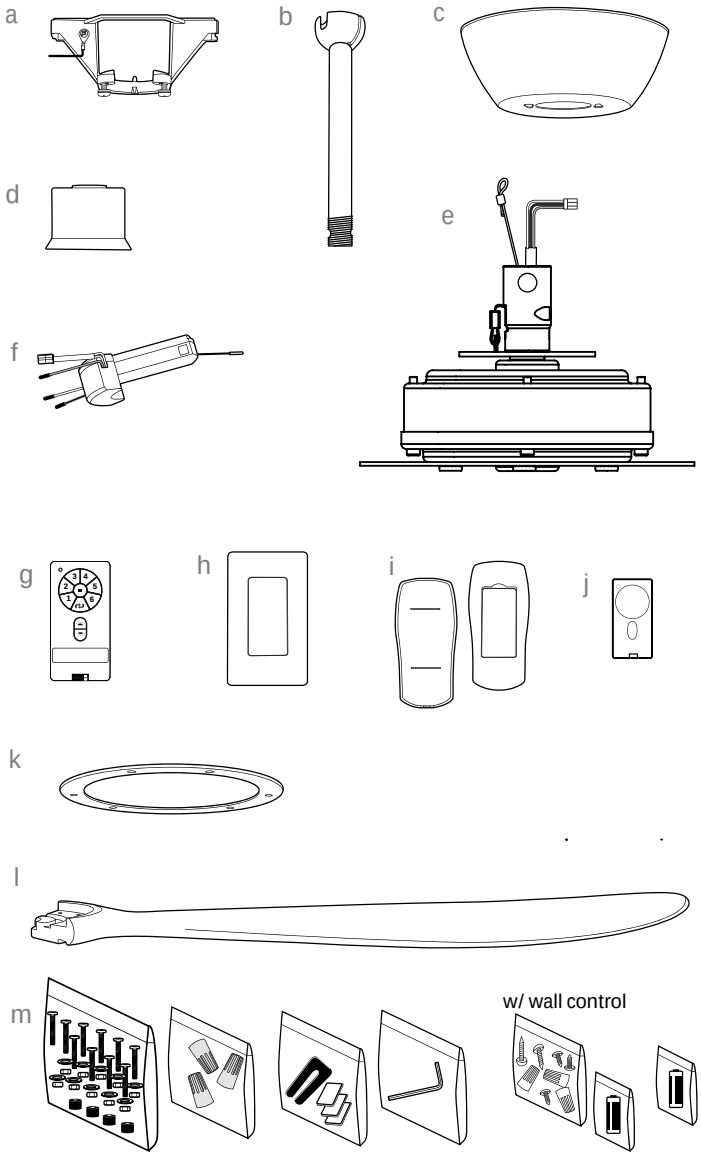

⚠ **IMPORTANT REMINDER**: You must use the parts provided with this fan for proper installation and safety. ⚠

3. Installation Preparation.

To prevent personal injury and damage, ensure that the hanging location allows the blades a clearance of 10ft. (3.05m) from the floor and 30in. (76cm) from any wall or obstruction.
This fan is suitable for room sizes up to 400 square feet (37.2 square meters).

This fan can be mounted with a **downrod** on a regular (no-slope) or vaulted ceiling. The hanging length can be extended by purchasing a longer downrod (0.5in. /1.27cm diameter). Other installation, such as **flushmount**, is not available for this fan.

Installation requires these tools:
Phillips screwdrivers, flat-head screwdriver, adjustable pliers or wrench, stepladder, wire cutters and rated electrical tape.

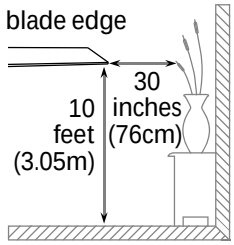

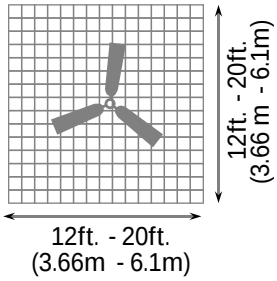

downrod installation | **flushmount installation**

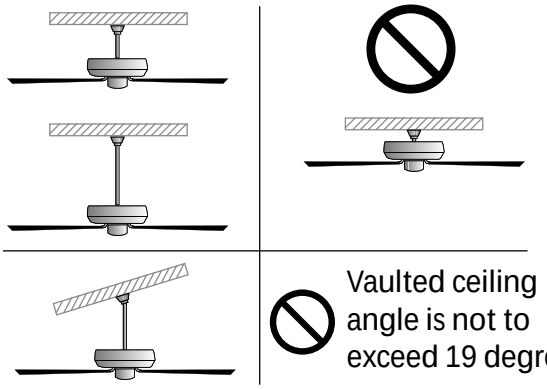

Vaulted ceiling angle is not to exceed 19 degrees.

4. Hanging Bracket Installation.

Turn off circuit breakers to current fixture from breaker panel and be sure operating light switch is turned to the OFF position.
WARNING: Failure to disconnect power supply prior to installation may result in serious injury.

Remove existing fixture.
WARNING: When using an existing outlet box, be sure the outlet box is securely attached to the building structure and can support the full weight of the fan. Ensure outlet box is clearly marked "Suitable for Fan Support." If not, it must be replaced with an approved outlet box. Failure to do so can result in serious injury.

CAUTION: Be sure outlet box is grounded properly and that a ground wire (**GREEN** or bare) is present.

Partially loosen screws in canopy. Twist canopy to remove hanging bracket.

Install hanging bracket to outlet box using original screws, spring washers and flat washers provided with new or original outlet box. ***If installing on a vaulted ceiling, face opening of hanging bracket towards high point of ceiling. Arrange electrical wiring around the back of the hanging bracket and away from the hanging bracket opening.

***Note**: It is very important that you use the proper hardware when installing the hanging bracket as this will support the fan.

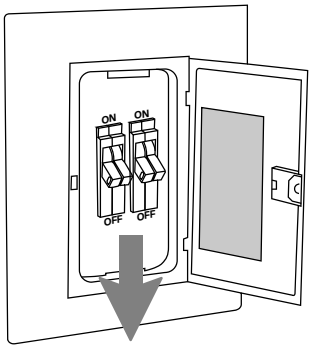

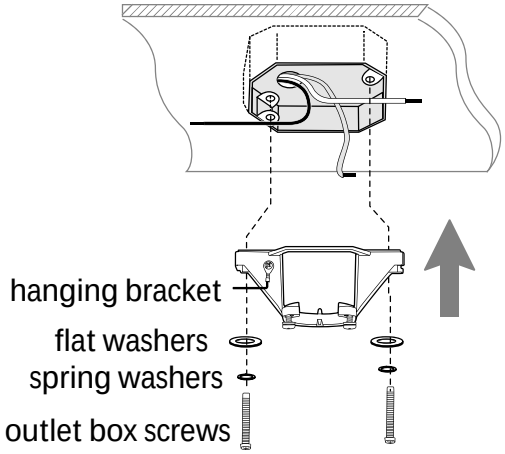

5. Blade Assembly.

WARNING: To reduce the risk of serious bodily injury, DO NOT use power tools to assemble the blades. If overtightened, blades may crack and break.

Locate 9 blade attachment screws,9 lock washers,9 nuts,and 3 rubber washers in hardware pack.
Slide one blade with the pointed side under the bottom of motor, aligning holes in blade with holes on the edge of the motor.
Insert 1 blade attachment screws and rubber washer from UNDERSIDE of blade and 1 nuts (along with lock washers) from TOPSIDE of blade. With help of the allen wrench from one of the hardware pack, make sure to completely insert screw so that the blade can be attached correctly.
Place blade ring under the blade, aligning all 2 holes in blade with 2 holes on blade ring. Insert 2 blade attachment screws from UNDERSIDE of blade and 2 nuts (along with lock washers) from TOPSIDE of blade. With help of the allen wrench from one of the hardware pack, make sure to completely insert each screw so that the blade can be attached correctly.
Place next two blades underneath the motor (between the blades ring) and repeat procedure. Tighten all 9 screws securely with the allen wrench.

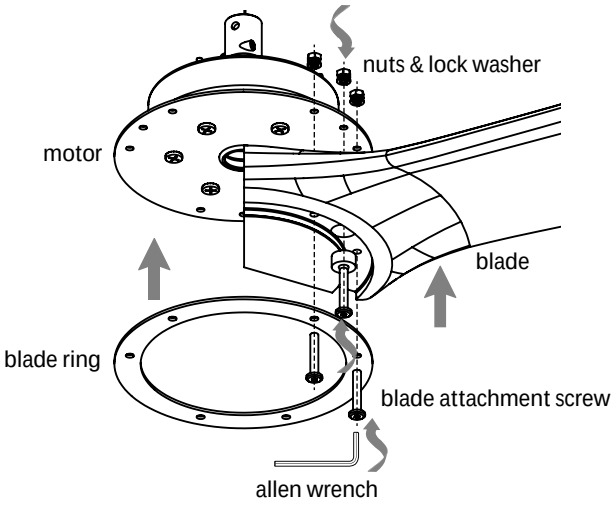

Note: Tighten blade arm screws twice a year.

6. Fan Assembly.

CAUTION: Due to the size of this fan, it is advisable to seek the help of another person to hold the stepladder in place and to then help lift the fan up to you once you are set on the ladder.

Remove hanging ball from downrod provided by loosening set screw on hanging ball. Lower hanging ball and remove stop pin and then slide hanging ball off of the downrod. [Refer to **diagram 1**.]

["Fan Assembly" continued on next page.]

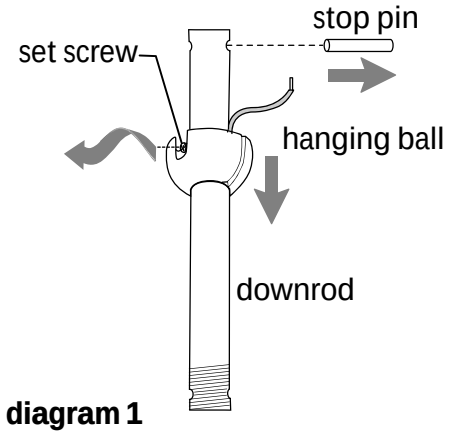

diagram 1

6. Fan Assembly. (cont.)

Loosen yoke set screws and nuts at top of motor housing. Remove pin and clip from motor housing yoke. [Refer to **diagram 2**.]

Determine the length of threaded downrod you wish to use. Thread safety cable and electrical wires through threaded end of downrod and pull extra wire slack from the upper end of the downrod. [Refer to **diagram 2**.]

Thread downrod into the motor housing yoke until holes for pin and clip in downrod align with holes in yoke--make sure wires do not get twisted. Re-insert pin and clip that were previously removed. Tighten yoke set screws and nuts securely. [Refer to **diagram 2**.]

Slide yoke cover and canopy over downrod. [Refer to **diagram 3**.]

Thread safety cable and wires through hanging ball; then slide hanging ball over downrod--the top of the downrod should be noted as having a set screw hole; use this hole when setting the set screw. Insert stop pin into top of downrod and raise hanging ball. Be sure stop pin aligns with slots on the inside of the hanging ball. Tighten set screw securely. [Refer to **diagram 4**.]

WARNING: Failure to tighten set screw (on hanging ball) completely could result in the fan becoming loose and possibly falling.

["Fan Assembly" continued on next page.]

NOTE: The important safety precautions and instructions appearing in the manual are not meant to cover all possible conditions and situations that may occur. It must be understood that common sense and caution are necessary factors in the installation and operation of this fan.

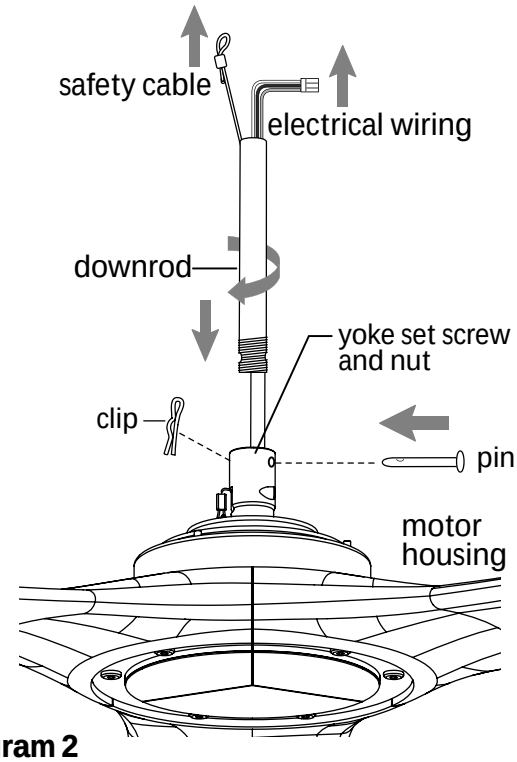

diagram 2

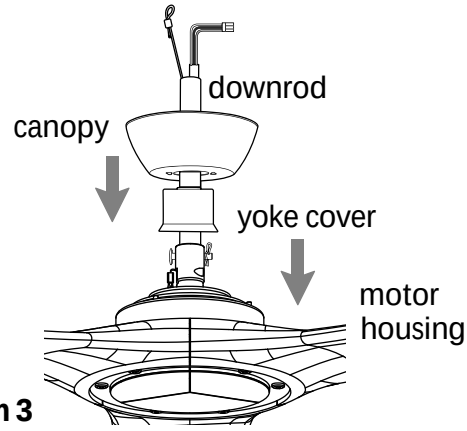

diagram 3

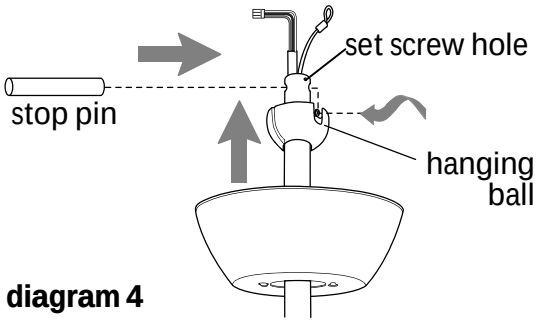

diagram 4

6. Fan Assembly. (cont.)

With the hanging bracket secured to the outlet box and able to support the fan, you are now ready to hang your fan. Grab the fan firmly with two hands. Slide downrod through opening in hanging bracket and let hanging ball rest on the hanging bracket. Turn the hanging ball slot until it lines up with the hanging bracket tab.

WARNING: Failure to align slot in hanging ball with tab in hanging bracket may result in serious injury or death.

Tip: Seek the help of another person to hold the stepladder in place and to help lift the fan up to you once you are set on the ladder.

Find a secure attachment point (wood ceiling joist highly recommended) and secure safety cable. It will be necessary to use a heavy duty wood screw, washer and lock washer (not supplied) with the safety cable loop. If necessary, adjust the loop at the end of the safety cable. The loop at the end of the safety cable should just fit over the threads on the wood screw. Test safety cable by pulling on loose end with pliers. If the safety cable slips, the loop must be adjusted tighter. Extra cable slack can be left in ceiling area.

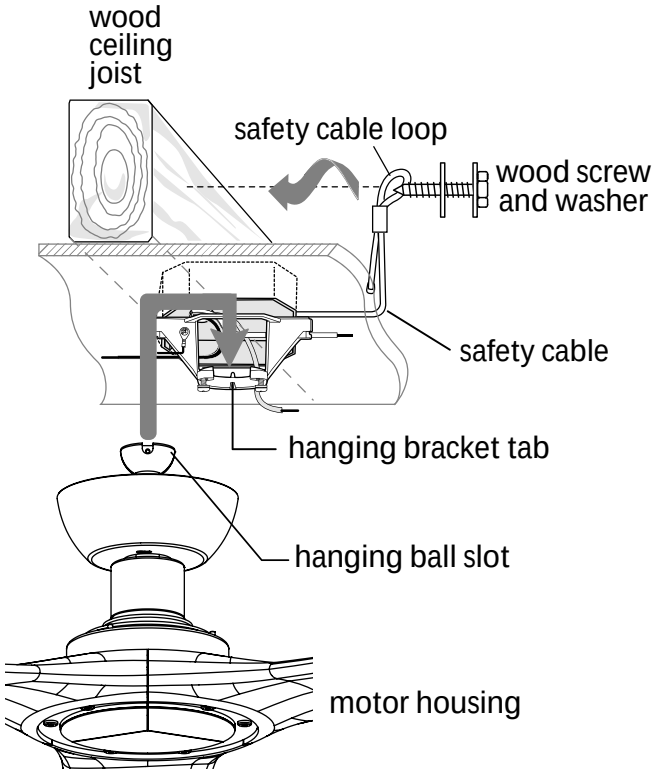

diagram 6

7. Wiring.

WARNING: Turn off circuit breakers to current fixture from breaker panel and be sure switch is turned to the OFF position.
CAUTION: Be sure outlet box is properly grounded and that a ground wire (**GREEN** or Bare) is present.

Make sure all electrical connections comply with Local Codes or Ordinances and the National Electrical Code. If you are unfamiliar with electrical wiring or if the house/building wires are different colors than those referred to in the diagram to the right, please use a qualified electrician.

When downrod is secured in place on the hanging bracket, wire the receiver as follows:
Connect 3-wire plug from fan to 3-wire plug from remote control receiver. Make sure plugs snap together completely.
Connect **BLACK** wire from remote control receiver to **BLACK** wire from ceiling with wire connector provided.
Connect **WHITE** wire from remote control receiver to **WHITE** wire from ceiling with wire connector provided.
Connect all **GREEN** wires together to **BARE/GREEN** wire from ceiling with wire connector provided.

Gently insert receiver (flat side down) into hanging bracket and carefully push taped wire connectors into outlet box. Let antenna rest outside of hanging bracket.

["Wiring" continued on next page.]

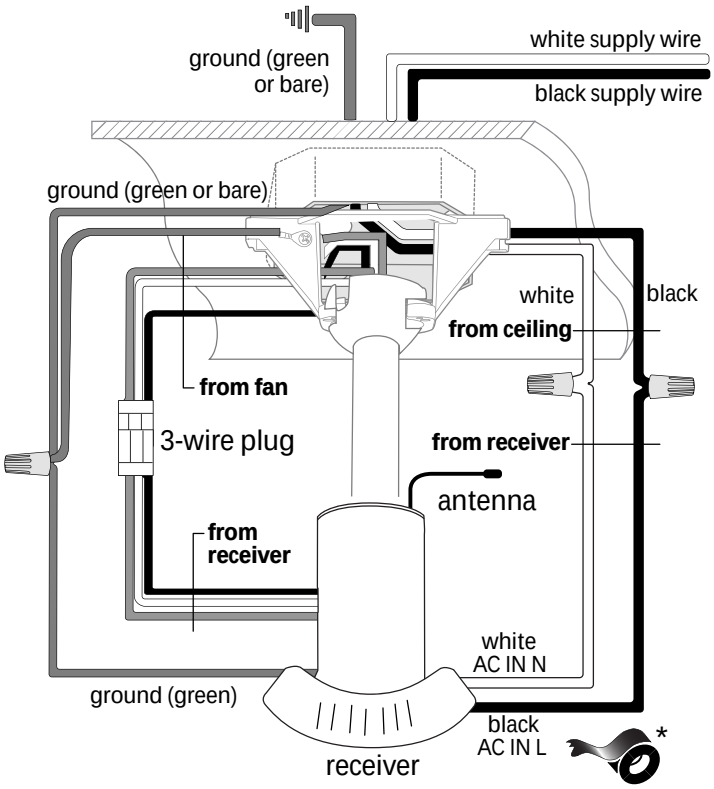

(wiring for receiver)

* Wrap each wire connector separately with electrical tape as an extra safety measure.

7. Wiring. (cont.)

PLEASE NOTE: Wall and/or remote conrol must be used for fan to operate. If you do not wish to use the wall control, please proceed to Section 8 to continue with fan installation.

IN ORDER TO WIRE WALL CONTROL, remove existing wall switch. Wire the **WALL CONTROL** with wire connectors provided as shown in diagram at right.

* Wrap each wire connector separately with electrical tape as an extra safety measure. Gently push wires and taped wire connectors into outlet box.

WARNING: **CONNECT WIRES IN THE FOLLOWING ORDER ONLY!**

Connect **GREEN** ground wire to ground from house or directly to one of the screws from the outlet box.

Connect one **BLACK** wire from wall control to **BLACK** (hot) lead wire from house. Connect second **BLACK** wire from wall control to **BLACK** load wire to fan.

Attach wall control to outlet box and secure with screws from original wall switch. Attach front plate to wall control using 2 screws provided in the wall control.

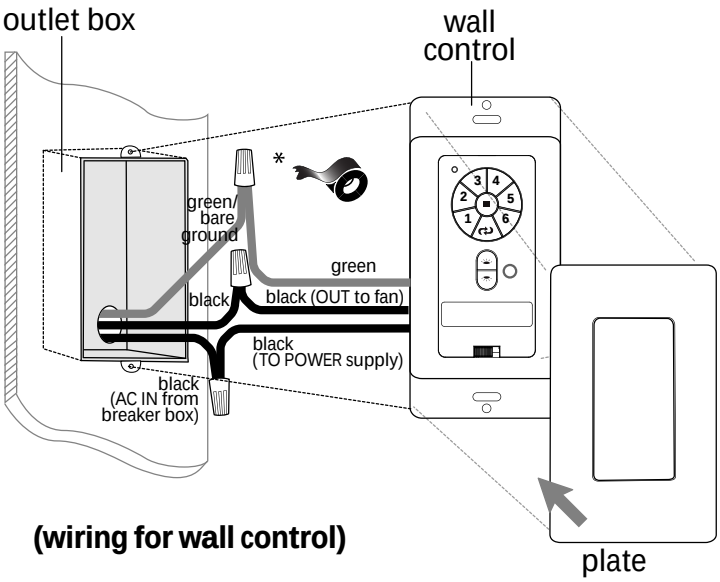

(wiring for wall control)

Modifications not approved by the party responsible for compliance could void the user's authority to operate the equipment.

*NOTE: This equipment has been tested and found to comply with the limits for a Class B digital device, pursuant to Part 15 of the FCC Rules. These limits are designed to provide reasonable protection against harmful interference in a residential installation. This equipment generates, uses and can radiate radio frequency energy and, if not installed and used in accordance with the instructions, may cause harmful interference to radio communications. However, there is no guarantee that interference will not occur in a particular installation. If this equipment does cause harmful interference to radio or television reception, which can be determined by turning the equipment off and on, the user is encouraged to try to correct the interference by one or more of the following measures:

* Reorient or relocate the receiving antenna.
* Increase the separation between the equipment and receiver.
* Connect the equipment into an outlet on a circuit different from that to which the receiver is connected.

Consult the dealer or an experienced radio/TV technician for help.

8. Canopy Assembly.

Lift canopy to hanging bracket. Place rounded part of holes in canopy over screws in hanging bracket and push up. Twist canopy to lock. Tighten both screws securely.

*Remember that antenna for remote control receiver must rest outside of hanging bracket.

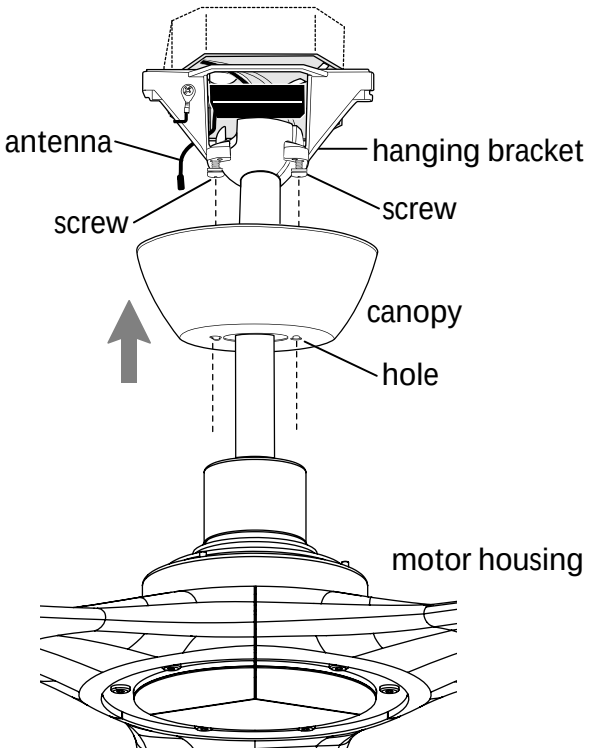

9. Automated Learning Process./Activating Code.

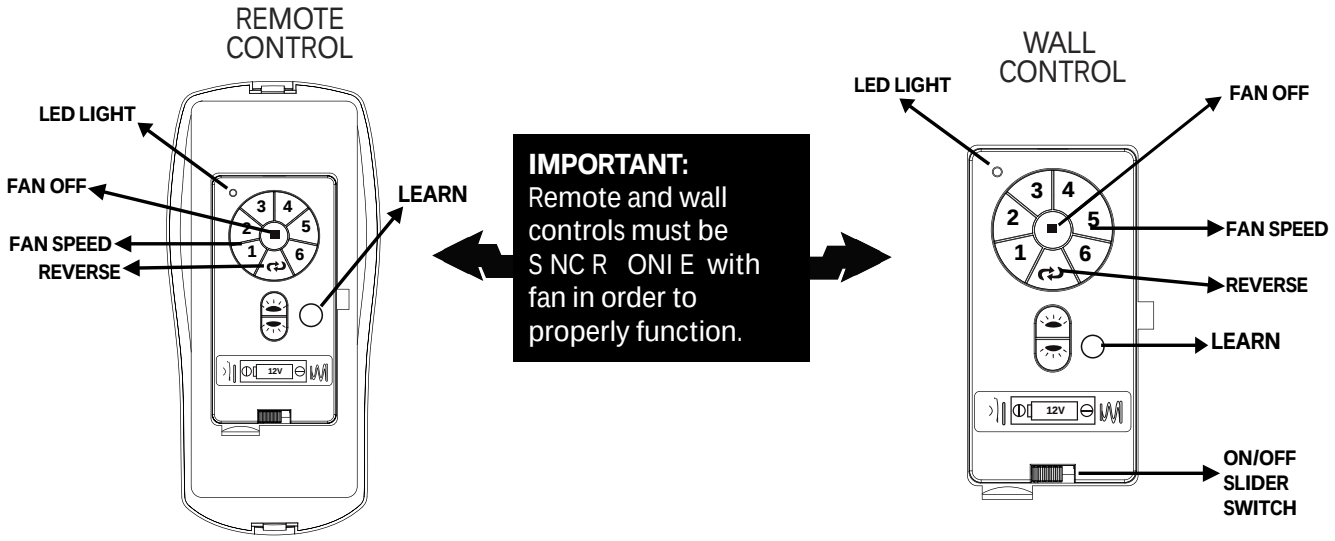

Install battery (provided) in transmitter and wall control (if applicable).
IMPORTANT: Store the transmitter away from excess heat or humidity. To prevent damage to transmitter, remove the battery if not used for long periods.

FAN SPEED, Buttons **1-6**:	Use to control the ceiling fan speed 1-6.
REVERSE:	Use to control fan direction.
LEARN button**:**	Turn fan power on. Within 30 seconds of powering fan, press and hold **LEARN** button on remote control and/or wall control for 5 seconds (or until fan beeps twice) in order to synchronize remotes with fan motor.
FAN OFF:	Use to turn fan off.
ON/OFF slider switch:	[Wall control only] Use to turn wall control on or off.

Select faceplate for remote control and/or wall control and press firmly onto front of remote control/wall control.

IMPORTANT: **The Automated Learning Process takes 5 minutes to complete. Please leave the fan "on" for the duration of the 5-minute programming and do not use the remote control during this time.**

Battery Replacement: Use a 12-volt battery.

⚠ **WARNING**: ***Choking Hazard*** - Small parts. Keep battery away from children.

⚠ **CAUTION:** "DO NOT DISPOSE OF BATTERIES IN FIRE, BATTERIES MAY EXPLODE OR LEAK." - When disposing of household alkaline batteries, it is best to check with your local and state recycling or household hazardous waste coordinators concerning the specifics of the program in your area. You may also locate a recycling center by calling 1-800-8-BATTERY or 1-877-2-RECYCLE or visit www.epa.gov/epawaste/index.htm or www.earth911.org for more information.

10. Testing Your Fan.

It is recommended that you test fan before finalizing installation. Test wall control (optional installation) by locating ON/OFF slider switch on wall control, then set to ON position. Test fan speeds. Next, locate remote control. Test fan speed with different fan speed buttons (1 - 6). If the remote control operates the functions of the fan, battery has been installed correctly. If the wall and/or remote control do (does) not operate the fan functions, refer to "Troubleshooting" section to solve any issues before contacting Customer Service.

Fan must be on LOW before setting the fan in reverse. Use button to recirculate air depending on the season. A ceiling fan will allow you to raise your thermostat setting in summer and lower your thermostat setting in winter without feeling a difference in your comfort.

IMPORTANT: Remote control (and wall control, if applicable) must be synchronized with fan in order to properly function.

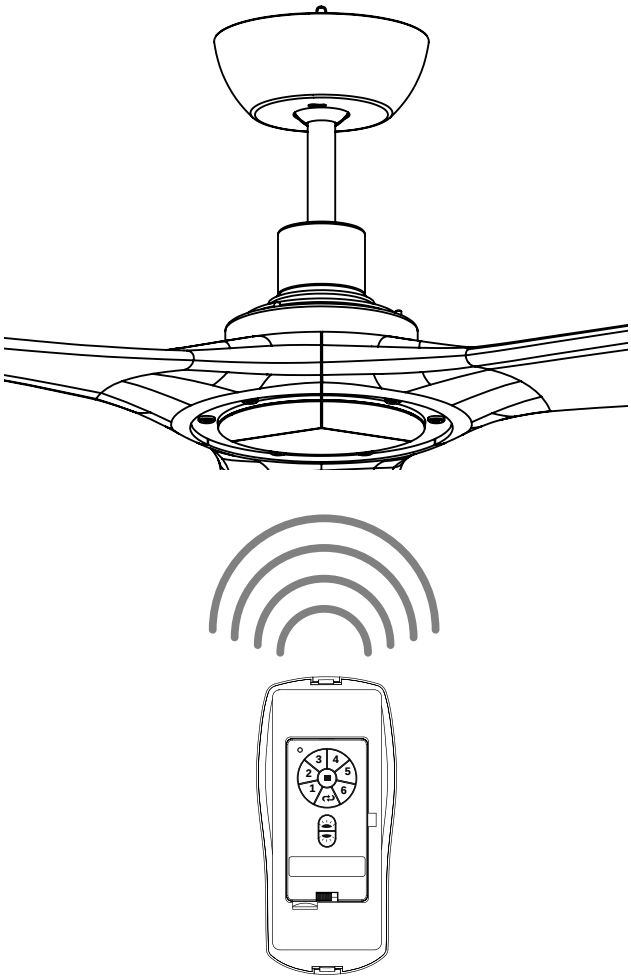

Troubleshooting.

WARNING: Failure to disconnect power supply prior to troubleshooting any wiring issues may result in serious injury.

Problem: Fan fails to operate.
Solutions:
1. Check wall switch to fan/wall control.
2. Check to be sure wall control (optional use) is wired properly.
3. Check to be sure fan is wired properly.
4. Learning process between fan, remote control and, if applicable, wall control may not have been successful and code was not activated. Turn off power and repeat instructions in Section 9 (page 8).
5. Check that blue light on handheld remote control turns on when a button is pressed indicating that the battery is good.

Problem: Fan fails to operate with wall control (optional) and/or remote control.
Solutions:
1. Check battery power in remote control.
2. Learning process between fan, remote control and, if applicable, wall control may not have been successful and code was not activated. Turn off power and repeat instructions in Section 9 (page 8).
3. If using optional wall control, check that battery in wall control is still good.

Problem: Fan wobbles.
Solutions:
1. Use the balancing kit in one of the hardware packs. If no blade balancing kit is provided, please call Customer Support, 1-800-486-4892, to request one.
2. Check to be sure set screw(s) on motor housing yoke is (are) tightened securely.
3. Check to be sure set screw on hanging ball is tightened securely.

Parts Replacement.

For parts and information, please refer to "Parts Inventory" on page 2.
Craftmade Customer Support:
1-800-486-4892
www.craftmade.com

Warranty.

CRAFTMADE™ LIFETIME LIMITED WARRANTY:
CRAFTMADE warrants this fan to the original household purchaser for indoor use under the following provisions:
1-YEAR WARRANTY: CRAFTMADE will replace or repair any fan which has faulty performance due to a defect in material or workmanship. Contact Craftmade Customer Service at **1-800-486-4892** to arrange for return of fan. Return fan, shipping prepaid, to Craftmade. We will repair or ship you a replacement fan, and we will pay the return shipping cost.
5-YEAR WARRANTY: CRAFTMADE will repair or replace, at no charge to the original purchaser, any fan motor that fails to operate satisfactorily when failure results from normal use.
RETURN FAN MOTOR ONLY, shipping prepaid, to Craftmade Industries. We will repair or ship purchaser a replacement motor and Craftmade will pay the return shipping cost.
6-YEAR to LIFETIME LIMITED WARRANTY: CRAFTMADE will repair the fan, at no charge for labor only to the original purchaser, if the fan motor fails to operate satisfactorily when failure results from normal use. Parts used in the repair will be billed to the purchaser at prevailing prices at time of repair.

The purchaser shall be responsible for all costs incurred in the removal, reinstallation and shipping of the product for repairs.

This warranty does not apply when damage from mechanical, physical, electrical or water abuse results in causing the malfunction. Deterioration of finishes or other parts due to time or exposure to salt air is specifically exempted under this warranty.

Neither Craftmade nor the manufacturer will assume any liability resulting from improper installation or use of this product. In no case shall the company be liable for any consequential damages for breach of this, or any other warranty expressed or implied whatsoever. This limitation as to consequential damages shall not apply in states where prohibited.

CRAFTMADE™

Caution:

This device complies with Part 15 of the FCC rules and Industry Canada license-exempt RSS standard(s). Operation is subject to the following two conditions: (1) this device may not cause harmful interference, and (2) this device must accept any interference received, including interference that may cause undesired operation.

The manufacturer is not responsible for any radio or TV interference caused by unauthorized modifications or change to this equipment. Such modifications or change could void the user's authority to operate the equipment.
This equipment has been tested and found to comply with the limits for a Class B digital device, pursuant to part 15 of the FCC Rules. These limits are designed to provide reasonable protection against harmful interference in a residential installation. This equipment generates, uses and can radiate radio frequency energy and, if not installed and used in accordance with the instructions, may cause harmful interference to radio communications. However, there is no guarantee that interference will not occur in a particular installation. If this equipment does cause harmful interference to radio or television reception, which can be determined by turning the equipment off and on, the user is encouraged to try to correct the interference by one or more of the following measures:
-- Reorient or relocate the receiving antenna.
-- Increase the separation between the equipment and receiver.
-- Connect the equipment into an outlet on a circuit different from that to which the receiver is connected.
-- Consult the dealer or an experienced radio/TV technician for help.

The device has been evaluated to meet general RF exposure requirement.

To maintain compliance with FCC's RF exposure guidelines, this equipment should be installed and operated with a minimum distance of 20cm between the radiator and your body.