SAGEM

my401V

User Guide

English

Customised for

vodafone

live!™

You have just purchased a SAGEM phone, we congratulate you; it is recommended that you read this handbook carefully in order to use your phone efficiently and in the best conditions.

Your phone can be used internationally in the various networks (GSM 900 MHz, DCS 1800 MHz or PCS 1900 MHz) depending on the roaming arrangements with your operator.

We remind you that this phone is approved to meet European standards.

WARNING

Depending on the model, network configuration and associated subscription cards, certain functions may not be available.

Ensure that your SIM card is a 3 V SIM type that is compatible with your phone. Inserting an incompatible card will be indicated by a message when your phone is switched on. Contact Vodafone.

Your phone is identified by its IMEI number. Write this number down, and do not keep it with your phone, because you may be asked for it in the event of your phone being stolen, in order to prevent it from being used, even with a different SIM card. In order to display the IMEI on your phone's screen, type: *#06#.

SAGEM™ is a trademark of Sagem Communication SAFRAN Group.
AT® is a registered trademark of Hayes Microcomputer Products Inc.
Hayes® is a registered trademark of Hayes Microcomputer Products Inc.
T9 is protected by one or more of the following US patents: 5,818,437,
5,953,541, 5,187,480, 5,945,928, 6,011,554 and other patents are being applied for worldwide.
Java™ and all Java™ based trademarks and logos are trademarks or registered trademarks of Sun Microsystems, Inc. in the U.S. and other countries.
The WAP navigator and the softwares included are the exclusive property of Openwave. For this reason, it is forbidden to modify, translate, disassemble or even decompile all or part of these softwares.
© 2003 GAMELOFT® - All rights reserved - GAMELOFT® is a registered trademark of GAMELOFT S.A. - All rights reserved.
Wellphone™ and SmartCom™ are registered trademarks owned by SmartCom SARL France.

Contents

FCC statement 6

Safety Information 7
Distance of operation 8

SAR 9
Environment 10

Menus 11

Your phone package - Accessories..... 12

Description 13

Navigation principles 15

Initial screen 16

Activating your phone 17
Information on the Vodafone SIM card 17
First use: installing your Vodafone SIM card and the battery 18
Removing the back cover 18
Getting started 19
PIN number 19
Setting time and date 20
Network 20
First call 20
Receiving a call 21
Switching off 21

Using your phone 22
Freeing the antenna 22
Increase the efficiency of your phone 22
Charging the battery 23

Contacts 24
Using the phonebook 24
Contacts menu 24
Speed Dialing 25
Displaying a contact 25
Calling a contact 26
Contacts options 26
Groups 27

Messaging 28
Creating a message 28
MMS postcard 30
Receiving messages 31
Inbox 31
Drafts 31
Sent Messages 32
Outbox 32
Messenger 32
Voicemail 33
Templates 33
Live! Studio 33
Settings 33
Local information 34
Groups 34
Memory 34

Camera 35
Taking and saving a photo 35
Taking a video 36

My Files 37
Pictures.....37
Sounds 38
Videos.....38
Exchanging objects with a PC and your phone 38

Vodafone live!..... 39

Games and applications 40

Organiser 41
Alarm 41
Timer 41
Calendar 41
Calculator and converter 42
Todo 43
Music Player 44

Settings 45
Phone 45
Display.....47
Messaging 48
Connectivity 48
Bluetooth 49
Calls.....50
Networks.....51
Security.....52
Media Player.....54
Browser 54
Camera.....54
Video 54

Technical features..... 55

Warranty..... 56

End User Licence Agreement (EULA), for the software 59

Java™ 63

Troubleshooting 67

FDA consumer information on wireless phones 70

Driving safety tips 73

Index 74

FCC statement

This device complies with part 15, part 22 and part 24 of the FCC rules. Operation is subject to the following two conditions: (1) this device may not cause harmful interference, and (2) this device must accept any interference, including interference that may cause undesired operation.

This equipment has been tested and found to comply with the limits for a Class B digital device, pursuant to Part 15 of the FCC Rules. These limits are designed to provide reasonable protection against harmful interference in a residential installation. This equipment generates, uses and can radiate radio frequency energy and, if not installed and used in accordance with the instructions, may cause harmful interference to radio communications. However, there is no guarantee that interference will not occur in a particular installation. If this equipment does cause harmful interference to radio or television reception, which can be determined by turning the equipment off and on, the user is encouraged to try to correct the interference by one or more of the following measures:

- Reorient or relocate the receiving antenna.
- Increase the separation between the equipment and receiver.
- Connect the equipment into an outlet on a circuit different from that to which the receiver is connected.

Consult the dealer or an experienced radio/TV technician for help.

WARNING

Changes or modifications made to this equipment not expressly approved by Sagem Communication for compliance could void the user's authority to operate the equipment.

Safety Information

Aircraft: Switch off your wireless device whenever you are instructed to do so by airport or airline staff. If your device offers a “flight mode” or similar feature, consult airline staff as to its use in flight.

Driving: Full attention should be given to driving at all times, and regulations restricting the use of wireless devices while driving must be observed. For further driving safety tips, please refer to **Driving safety tips** at page 73.

Hospitals: Mobile phones should be switched off whenever you are requested to do so in hospitals, clinics or health care facilities. These requests are designed to prevent possible interference with sensitive medical instruments.

Gas stations: Obey all posted signs with respect to the use of wireless devices or other radio equipment in locations with flammable material and chemicals. Switch of your wireless device whenever you are instructed to do so by authorized staff.

Interference with personal medical devices: **You should always consult your physician and review the device manufacturer's instructions to determine if operation of your phone may interfere with the operation of your medical device.** As a general rule:

- **For pacemakers:** Pacemaker manufacturers recommend that a minimum separation of 6 inches (15 cm) be maintained between a mobile phone and a pacemaker to avoid potential interference with the pacemaker. To achieve this, use the phone on the opposite ear to your pace maker and do not carry it in a breast pocket.
- **For hearing aids:** Some digital wireless phones may interfere with some hearing aids. In the event of such interference, you may want to consult your hearing aid manufacturer to discuss alternatives.

The ring tone, info tones, and handsfree talking are reproduced through the loudspeaker. Do not hold the phone to your ear when it rings or when you have switched on the handsfree function (at least 3.9 inches (10 cm)).

Use only batteries and charging devices designed for your phone. Otherwise you risk serious damage to health and property and may void any warranty.

CAUTION! Small parts like the SIM card could be swallowed by young children.

Do NOT open the phone. Only the battery and the SIM card may be removed. Do NOT open the battery.

Keep the battery out of chidren’s reach. Do not allow the battery to be put into the mouth.

Distance of operation

This phone is designed to comply with the FCC radio frequency (RF) exposure guidelines when used as follows:

- **Against the ear:** Place or receive a phone call and hold the phone as you would a wireline telephone.
- **Body worn:** When transmitting, place the phone in a carrying accessory that contains no metal and positions the phone a minimum of 0.98 inches (2.5 cm) from your body. Use of other accessories may not ensure compliance with exposure guidelines. If you do not use a body worn accessory and are not holding the phone at the ear, position the phone a minimum of 0.98 inches (2.5 cm) from your body.
- **Data operation:** When using a data feature, position the phone a minimum of 0.98 inches (2.5 cm) from your body for the whole duration of the data transmission.

SAR

THIS MODEL PHONE MEETS THE FCC'S REQUIREMENTS FOR EXPOSURE TO RADIO WAVES

Your wireless phone is a radio transmitter and receiver. It is designed and manufactured not to exceed the limits for exposure to radiofrequency (RF) energy set by the United States Federal Communications Commission (FCC). These limits are part of comprehensive guidelines and establish permitted levels of RF energy for the general population. The guidelines are based on standards that were developed by independent scientific organizations through periodic and thorough evaluation of scientific studies. The standards include a substantial safety margin designed to assure the safety of all persons, regardless of age and health.

The exposure standard for wireless mobile phones employs a unit of measurement known as the Specific Absorption Rate, or SAR. The SAR limit set by the FCC and Health Canada is 1.6 W/kg (*). Tests for SAR are conducted using standard operating positions accepted by the FCC with the phone transmitting at its highest certified power level in all tested frequency bands. Although the SAR is determined at the highest certified power level, the actual SAR level of the phone while operating can be well below the maximum value. This is because the phone is designed to operate at multiple power levels so as to use only the power required to reach the network. In general, the closer you are to a wireless base station antenna, the lower the power output.

Before a phone model is available for sale to the public, it must be tested and certified to the FCC that it does not exceed the RF limit established by the government-adopted requirement for safe exposure. The tests are performed in positions and locations (i.e., at the ear and worn on the body) as required by the FCC for each model.

The highest SAR value for these model phones as reported to the FCC when tested for use at the ear is 1.4 W/Kg and when worn on the body as described in this user's guide is 0.56 W/kg, measured at a distance of 0.98 inches (2.5 cm).

While there may be differences between the SAR levels of various phones and at various positions, they all meet the FCC requirement. The FCC has granted an Equipment Authorization for this model phone with all reported SAR levels evaluated as in compliance with the FCC RF exposure guidelines. SAR information on this model phone is on file with the FCC and can be found under the Display Grant section of http://www.fcc.gov/oet/fccid after searching on FCC ID M9HD2005R2P.

Additional Information can be found on the website of the World Health Organization (http://www.who.int/emf).

(*) In the United States and Canada, the SAR limit for mobile phones used by the public is 1.6 watts/kilogram (W/kg) averaged over one gram of tissue. The standard incorporates a substantial margin of safety to give additional protection for the public and to account for any variations in measurements.

Environment

Packaging

To facilitate the recycling of packaging materials, please obey the sorting rules instituted locally for this type of waste.

Batteries

Spent batteries must be deposited at the designated collection points.

The product

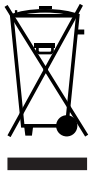

The crossed-out waste bin mark affixed to the product means that it belongs to the family of electrical and electronic equipment.

To promote the recycling and recovery of waste electrical and electronic equipment (WEEE) and at the same time safeguard the environment, European regulations require you to obey the sorting rules instituted locally for this type of waste.

Menus

Entertainment

Vodafone live!

- Vodafone live!
- Enter URL
- Bookmarks
- History
- Settings
- Vodafone mail
- What's New?
- Live! Studio
- More Games
- More Sounds
- More Pictures
- News
- Sport

Organiser

- Alarm
- Applications
- Timer
- Calendar
- Calculator
- Todo
- Vodafone Services
- Music Player

Camera

Messaging

- Create new
- Inbox
- Drafts
- Sent Messages
- Outbox
- Messenger (*)
- Vodafone Mail
- Voicemail
- Templates
- Live! Studio (*)
- Settings
- Local info.
- Group
- Memory

My Files

- Pictures
- Sounds
- Videos

Call Log

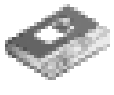

Contacts

Settings

- Phone
- Display
- Messaging
- Connectivity
- Calls
- Networks
- Security
- Media Player
- Browser
- Camera
- Video
- Help

(*) *Service depending on the operator*

Your phone package - Accessories

When you open the box, check that all items are present:

1 - Phone
2 - Charger
3 - Battery
4 - User guide

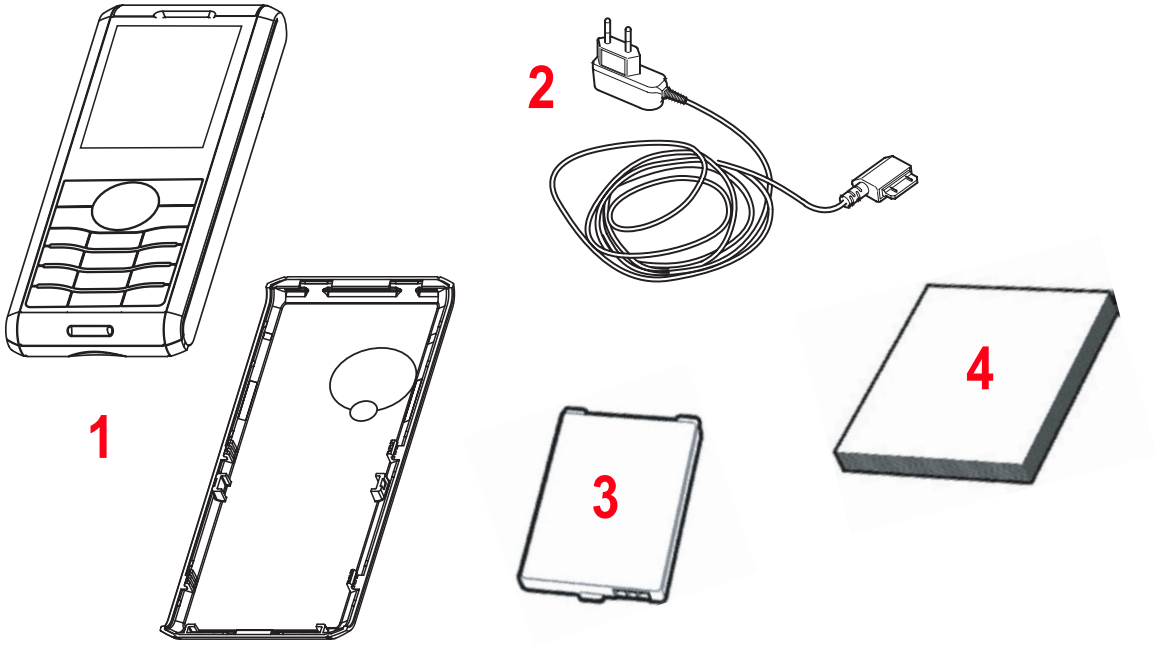

Accessories

We advise you the use of SAGEM brand accessories for an optimal operating of your phone and of your accessories. You can also find (as an option) or order the following accessories:

- Pedestrian kit
- Bluetooth pedestrian kit
- Additional battery
- Additional charger
- USB cable (with associated drivers) to connect your phone to a PC
- Cigar lighter charger
- Wellphone CD

Note: The front and back covers are not interchangeable.

For more information: www.planetsagem.com and www.sagem.com/mobiles.

Description

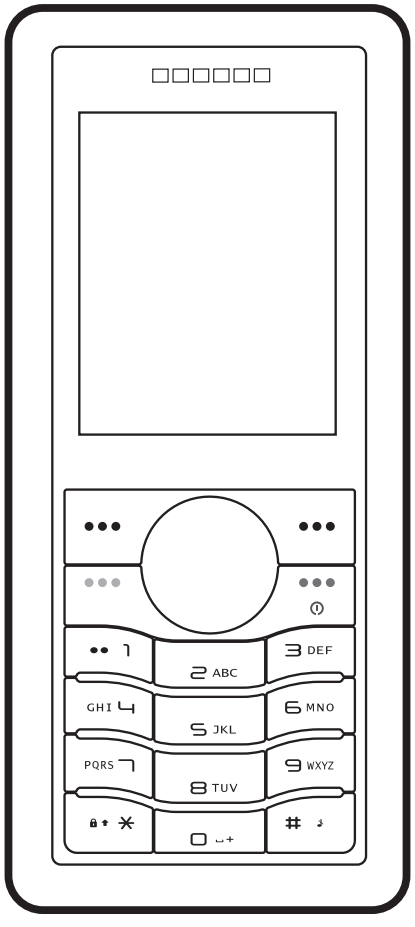

Hold down: Switch on/off
In a call context: Reject a call - hang up
In menus: Return to initial screen

Short press: Activate/Deactivate hands-free mode (**WARNING:** in this mode do not bring the phone up to your ear (at least 3.9 inches (10 cm))
In dialling/phonebook/call log context: Call - receiving a call

Right key:
In initial screen: Access to Vodafone live! (shortcuts)
In menus: Access to the selection shown on screen in the tab (*)

Left key:
In initial screen: Access to the main menu (shortcuts)
In menus: Access to the selection shown on screen in the tab (*)

The four-directional navigation stick allows you to:
- Move the cursor on the screen by pushing the stick toward the corresponding direction
- Confirm your selection by pressing the stick
- In initial screen:
  - leftwards/rightwards: open **Create new**/**My Files**
  - downwards/upwards: open **Contacts**/**Vodafone live!**

Note: in this manual, "press **OK**" means press the central key.

Press briefly and [**OK**]: activate or deactivate keypad locking
When composing a message:
Short press: switches from one editing mode to another (upper case/lower case, 123 mode)
Long press: activate/deactivate T9 mode

Hold down: In idle screen: Silent mode
In call reception mode: Short press stops ring tone
In ring tone setting mode: Activate/deactivate ring tone. Stops sound in video or message playing, or in a game

2 to 9 Long press: access to Speed Dialing

*(*) In this manual, when a function is chosen by pressing on this key, square brackets are used (e.g.: [**Save**]).*

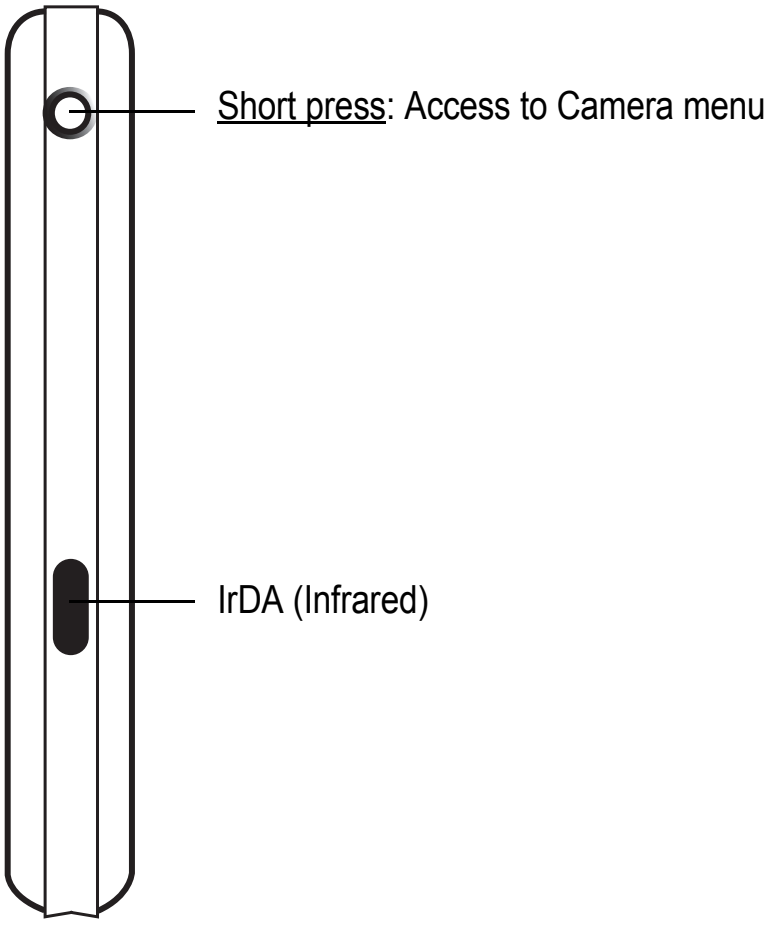
Short press: Access to Camera menu
IrDA (Infrared)

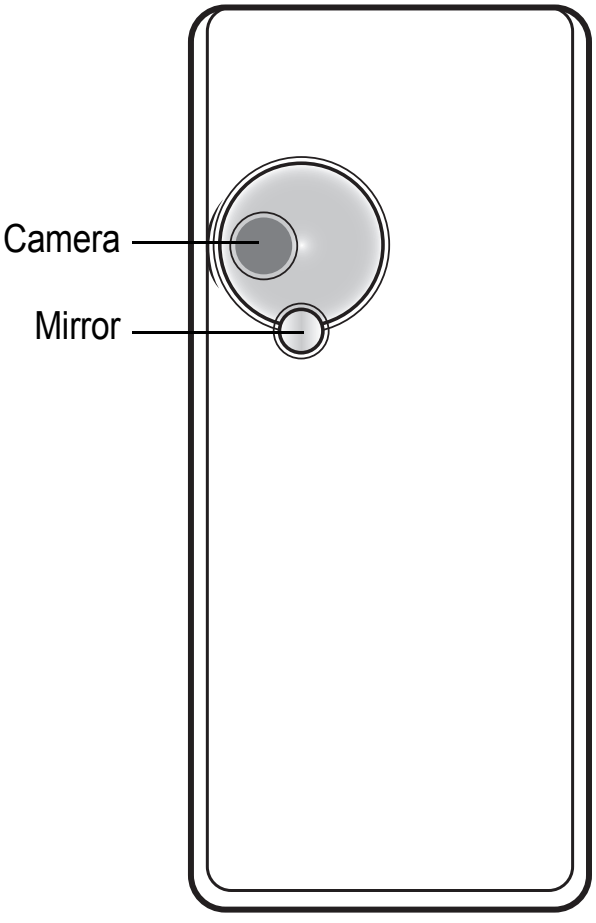
Camera
Mirror

Navigation principles

These basic principles bring a great intuitiveness to your phone.

Validate by pressing the key or the navigation stick.

Cancel by pressing the key.

The thumbnails at the bottom of the screen refer to the keys.

In the menus, a title bar reminds you of the previous level.

From the home page, pressing the navigation stick displays the icons of the main menus.

When pressing the navigation stick followed by a figure, you can display a menu directly. For instance, pressing the navigation stick then **8** displays the Phonebook.

The key is used to go from a menu to a sub-menu.

The key is used to go from a sub-menu to a menu.

The key (press briefly) is used to go back to the initial screen (current function is abandoned).

In some menus there is a Help menu (icon) which informs you on the various functions of the sub-menus.

Initial screen

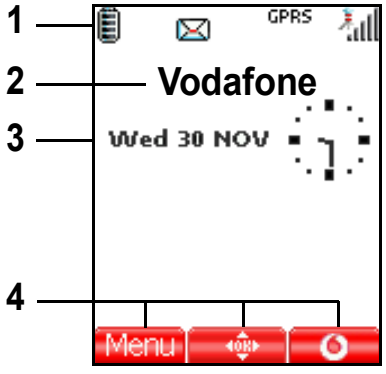

The initial screen contains the following information:

1 - The title bar icons:

	Battery
	Calls forwarded
	Call (establishing the call)
	Call (hands free)
	Message (reception of a message, message memory full)
FAX	FAX communication
DATA	DATA communication
	Silent mode
	Message in answering machine
	WAP (@) communication
GPRS	GPRS
	Home zone
R	Roaming
	Only emergency call is possible
	Keypad locking
	Protected WAP logon
	Protected WAP logon icon with certificate
	Signal strength level (5 bars).

2 - Network provider

3 - Date and time, in digital or analog mode

4 - Symbols and thumbnail centred on bottom line:

- The main thumbnail shows that the menu can be accessed via the navigation stick.
- Menu: Short access to the main menu - : Short access to **Vodafone live!** menu
- Information messages on calls, messages or network messages received may also be displayed. They can be deleted by pressing key briefly.

Activating your phone

Information on the Vodafone SIM card

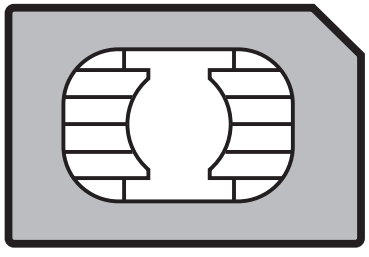

To use your phone, you need Vodafone SIM card. It contains personal information that you can modify:

- Secret codes (PIN(s): Personal Identification Numbers), these codes allow you to protect access to your SIM card and phone
- Phonebook
- Messages
- How special services work.

Your phone is compatible with the SIM 3V cards.

WARNING
This card must be handled and stored with care in order not to be damaged. If you should lose your SIM card, contact Vodafone immediately.
Please keep your SIM card out of reach of young children.

First use: installing your Vodafone SIM card and the battery

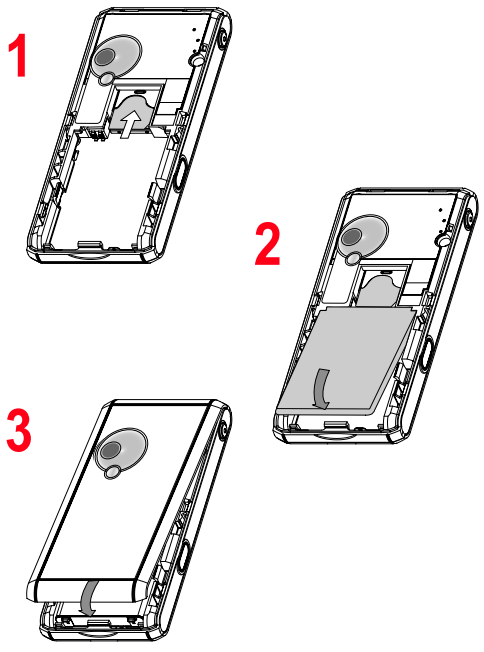

1 Slide the SIM card, with cut corner as shown on the phone, into the card holder with fold face down.

2 Place the battery by positioning first the top of it, as shown on the battery.

3 Place the back cover, clicking in first the upper part then the lower.

Removing the back cover

Proceed as follows to remove the back cover (in case of replacement of the battery or the SIM card, for instance):

- Turn the phone back. Press on the centre part at the level of the notch (1) and lift the cover (2).

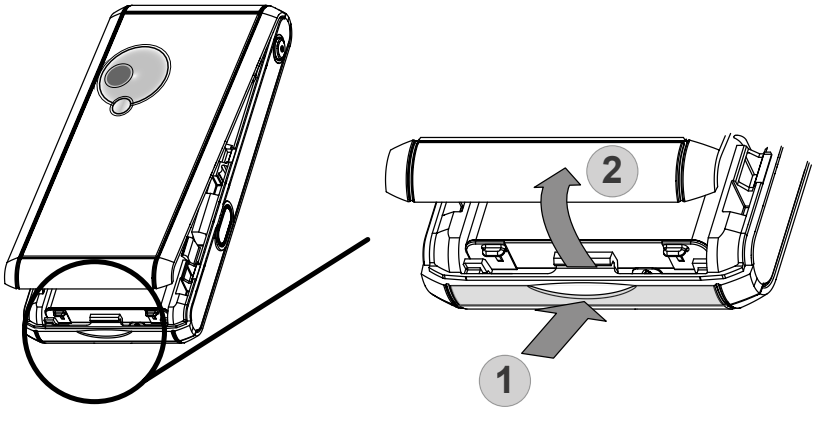

Getting started

You are now ready to use your phone for the first time.

Switch on the phone by pressing the key. A short display appears.

When you switch on your phone for the first time, you must configure it with various settings that will remain by default until you choose to modify them (depending on model).

After entering your PIN code, the phone activates the Vodafone settings and switches on again ; enter your PIN code again then the date and time, make your choice for the following settings: time zone, daylight savings, skin, wallpaper, screensaver, ring tone, volume, vibrate and voicemail number.

If there are contacts saved in your SIM card, you are invited, if you wish, to copy them in the phone contacts memory.

PIN number

This is your SIM's secret code.

If access to the Vodafone SIM card is protected, the device prompts you to enter the PIN number:

Enter the code between 4 and 8 digits given to you when the SIM card was issued. These digits do not appear on the screen for security reasons.

Press [**OK**] or the navigation stick to validate.

If your phone indicates that the SIM is missing, press the key to switch off your phone and check that the SIM card is correctly installed.

WARNING

If a wrong PIN number is entered three times in succession, your SIM card is blocked. You must then:

- Enter the PUK (Personal Unblocking Key) code provided by your operator, and validate.
- Enter your PIN number and validate.
- Enter your PIN number again and validate.

After 5 or 10 failed attempts (depending on the type of SIM card), the Vodafone SIM card is definitely locked. You must then contact your operator or your SMC to obtain a new card.

Setting time and date

When you use your phone for the first time, you need to set the date and time.
In due course, when the battery is completely discharged, or if it has been removed, you will be prompted systematically to confirm date and time.

Setting the date

Set the date by entering it directly in numerical form or by using the navigation stick to increase or decrease the default values.

Use the navigation stick to access the next (or last) data input field.

Once the date is correct, press the key to validate.

Setting the time

Same procedure as for setting the date.

Network

From now on the phone hunts for a network on which it can make calls. If it finds one, it displays the name of the network on the screen. You are then ready to send or receive a call.

If the network icon appears, calls are possible on your operator's network.
If the the icon and a network name are displayed, calls are possible on the network of a different operator.
If the the icon is displayed without any network name, only the emergency services are accessible (ambulance, police, fire brigade).
If the network icon flashes, the phone is in permanent search mode. There is no network available. The signal strength indicator received allows you to display the quality of reception. If it indicates less than three bars, search for better reception in order to call in good conditions.

First call

Dial the number of your correspondent.

Press the key.

During the call, the call in progress icon flashes on screen and tones may indicate the establishment of the call.

Once communication has been established, the call icon stops flashing.

You can adjust the sound level (volume) using the navigation stick.

At the end of the conversation press the key to hang up.

Calling voicemail

In the initial screen, press and hold down the **1** key.

International call
Press 0 (hold down) to display « + », then dial the country code without waiting for the dial tone, then the number of the called party.

Emergency services
Depending on the operators you can obtain the emergency service with or without SIM card or when the keypad is locked. It is enough to be in an area served by a network.
To obtain the international emergency service, dial **112** then press the key.

Receiving a call

When you receive a call, the number of your correspondent is displayed when it is presented by the network.
Press the key or the key to answer, and speak.
To refuse the call, press the key or the key.
To stop the ring tone or the vibrate, without refusing the call, press the # key.

Hands-free mode
During a call, press the key and validate pressing **OK** (or) or press **OK** twice to switch into hands-free mode.
WARNING: in this mode do not bring the phone up to your ear.

All the numbers corresponding to incoming and outgoing calls are logged in the list of recent calls.

When a call is on hand, pressing [**Options**] allows you to have access to different functions: switching to hands-free mode, holding a call, switching to mute mode, ending the call, displaying menus.

Pressing [**Secret mode ON**] allows you to switch off the sound temporarily when you do not want that your correspondent listens when you want to speak to other people.

Switching off

Press the key (long press).
The end message is displayed. The phone switches off.

Freeing the antenna

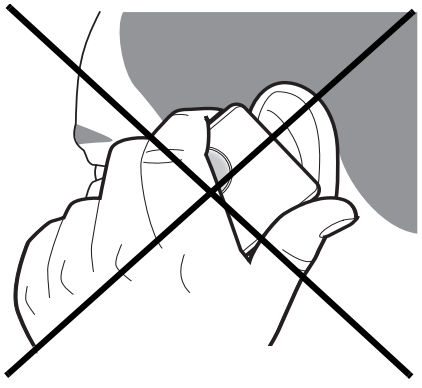

The antenna is integrated in your phone, under the back cover at the top.
Avoid putting your fingers on this area when the phone is switched ON.
If your fingers obstruct the antenna, the phone may have to operate with a higher power level than usual; decreasing its efficiency quickly. It could also affect the quality of your communications.

Increase the efficiency of your phone

- Don't press the keys when not necessary: each keypress activates the backlight, and uses much power.
- Don't obstruct the antenna with your fingers.
- Activation of IrDA or Bluetooth functions reduces the phone battery life. We advise you to deactivate them when not in use.

Charging the battery

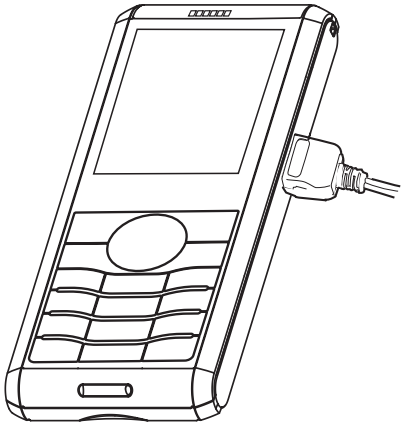

Your phone is powered by a rechargeable battery. A new battery must be charged for 4 hours at least before being used for the first time. It reaches its optimum capacity after a few cycles of use.

When your battery has been discharged, the phone displays the state (empty battery icon flashes). In this case recharge your battery for at least 15 minutes before making any calls in order not to be cut off in the middle of a call.

To recharge the battery:

Connect the charger to a socket.

Plug the end of the cable into the side connector of the phone.

The phone is then charging up. The battery icon is scrolling up and down to indicate that it is charging. When the battery is fully charged, the charging stops on its own. Disconnect the cable.

When charging, the battery may warm up, this phenomenon is normal.

WARNING

There is danger of explosion if the battery is placed in an incorrectly way or if it is exposed to fire.
Do not short circuit it.
The battery does not have any part that you can change.
Do not try to open the battery casing.
Use only the appropriate chargers and batteries as shown in the phone manufacturer's catalogue.
The use of other types of chargers or batteries may be dangerous or invalidate the warranty.
Used batteries must be disposed of in the appropriate places.
We advise you to take the battery out if you plan not to use the phone for extended periods.
You are strongly advised not to connect your phone to the charger if it doesn’t contain a battery.
The charger is a safety step-down transformer, it is forbidden to modify, alter or replace it by another component (power supply plug, etc).

Contacts

The phonebook allows you to store numbers that you call regularly. These numbers can be stored in the SIM card or in the phone.

To store a contact in the phone memory, the following fields can be filled: last name, first name, numbers, emails, URL, numbers, address, company, birthday, comments, ringtone, photo.

To store a contact in the SIM card, only the last name and number fields must be filled.

Using the phonebook

Display the **Contacts** menu. The list of your contacts appears.

The location where the contact is stored (SIM card or phone) is indicated by the icon at the top of the screen when the cursor is located on a contact.

contact stored in the SIM card

contact stored in the phone

contact stored in the Fixed Dialling. See **PIN2 number** and **Fixed dialling** page 52 for more details about this activation.

Contacts menu

Storing a new contact

There are two ways to store a contact:

1) by selecting **Contacts**/[**Options**] or **OK**, **Contacts menu**/**Add phone contact** or **Add SIM contact**.
2) **Contacts**/**Add contact**/**Telephone** or **SIM card**.

- Then enter the last name and press **OK**.
- Enter the number and press **OK**.
- Press [**Save**] to store it.

Contacts menu options

Memory

Select **Memory** and validate. Select **SIM** or **Telephone** and validate.

- **Telephone**: the screen displays the amount of memory used. The memory capacity is shared between the phonebook and various other features. If you lack memory, check if you can free some space from another feature.
- **SIM**: available memory only for contacts.

Synchronize

You can synchronize your phonebook with your archives stored in Vodafone's network depending on the options offered by your subscription.

The local synchronisation with your computer is only computer originated, from Wellphone software; you have only to activate infrared, Bluetooth, or configure your USB connection in your phone.

Contacts synchronisation with a computer

Install Wellphone, software provided on CD, and click on DIRECTSYNC: you can synchronise your contacts stored in the phone memory with those of your Lotus Notes™ or Microsoft Outlook™ bases.

Settings

- **List choice:** this menu allows you to select the default phonebook (SIM, Phone, SIM and Phone) displayed when the phone switches on.
- **Filter criteria:** this menu allows you to select the way to sort contacts in the phonebook (by name or first name).

Speed Dialing

You can assign a short number to a contact (from 2 to 9).

- From the idle screen, make a long press on the short number selected.
- The Speed Dialing function is displayed.
- Enter the phone number of your contact or press the [**Contacts**] key to select a contact already saved.
- Press [**OK**] to confirm.

Displaying a contact

Select a contact from the list and press **OK**. The name, the phone number and the order number with which the contact is stored are displayed.

Note: By directly pressing three characters, the phone will display the first contact saved in the phonebook, starting with it.

To display the different options, select a contact from the list and press [**Options**].

Calling a contact

Several ways:
- Select a contact. Press the key to start the call.
- Select a contact, press **OK**, his number is displayed, press [**Call**] to start the call.
- Direct call from the idle screen (only for the contacts stored in the SIM card memory): type the number with which the contact was saved then * (example : 21 *) or the number then #, the number is displayed, confirm.

Contacts options

To display the various options, select a contact and press [**Options**].

Edit contact

Modify what you want and validate then select **Save** once the modifications completed.

Send message

To send a SMS or a postcard to a contact (see chapter **Messaging**).

Send By

To send a contact details by SMS, MMS, IrDA or Bluetooth (see chapters **Messaging** and **Connectivity**).

Add Speed-Dialing

You can assign one of the numbers proposed to the contact selected (see **Speed Dialing** on page 25).

Copy one to SIM/Copy one to phone

This allows you to copy your phonebook contacts from one memory to the other. Only the name and the first phone number will be copied.

My numbers

You can create the entries corresponding to your own numbers in order to consult them when necessary.
Enter the different details and validate.

Delete/Delete all

This allows you to delete the contact selected or all the contacts.

Synchronise

See on page 25.

Add to mailing list

This menu allows you to add a contact to a mailing list.

Groups

A group allows you to send a same message to several recipients at the same time.

- In the phonebook, select the **Groups** tab.
- Press [**Options**].
- Select **Add group**.
- Enter a name and press **OK**.
- Then, on a list press [**Options**]. Select **Add contact** each time you want to add a contact in the list.

Messaging

From this menu, you are able to send SMS and MMS. MMS is the Multimedia Message Service, which allows you to send photos, audio files and other rich content in your messages; these messages can even be composed of several slides. MMS are charged at a different rate to SMS. Please contact Vodafone to get more information on their cost.
This menu has been compiled in collaboration with magic4™.

Creating a message

Messaging/Create new

The language used is the one selected on the display of the phone (if the language selected is not compatible with the Easy Message T9™, the English language will be automatically selected).

When typing a text, a counter showing the number of characters used is displayed at the top of the screen. This counter is not displayed if an icon or sound is inserted into the message.

When the text has been entered, [**Options**] is used to access the functions offered:

- **Add recipient**: to send the message by entering the recipient's number or selecting it in the phonebook.
- **Add Pictures**/**Sounds**/**Videos**/**Calendar**/**Visit cards**: to insert various objects into your message.
- **Add Subject**: allows you to precise a subject to your message.
- **Preview**: to display a preview of the message once composed.
- **Slide duration**: allows you to select a duration to make the text scroll automatically before sending the message.
- **Symbols**: to insert accented characters, special characters or punctuation.
- **Input mode**: **ABC mode/123 mode** (see page 29)**, T9 options** (see page 29).
- **Message type**: to select the message type (SMS or MMS).
- **Save to Drafts**: to save a draft in memory.
- **Save as Template**: allows you to keep as a template a message in order to use it again.
- **Send Options** (see page 33).

The Easy Message T9™ mode helps you to easily write your messages.

Using T9 Mode

Press once the key corresponding to the letter chosen and compose the word by continuing to press the keys corresponding to the various letters without paying attention to the display: the word is highlighted.

If you agree on the word proposed on the screen, press the **0** key to validate it (the **0** key inserts a space), and go on writing the next word.

However, the same sequence of keys pressed can correspond to several words, existing on the dictionary. If the word that appears is not the word you expected, press ▲ to scroll through the words corresponding to this key sequence.

Once you agree on the word proposed on the screen, press the **0** key to validate it (the **0** key inserts a space), and go on writing the next word.

If the word you are expected is not proposed, please add characters until you get the message **Add a word**? Press [**Yes**] and validate if the word displayed suits you or modify this word before adding it in the dictionary.

Input modes

When composing a message:
- [**Delete**]: deletes last letter
- [**Options**]: message options
- **# key:**
  short press: access to symbol table
  long press: change the T9 language
- **key**:
  Short press: switches from one editing mode to another (upper case/lower case/123 mode)
  Long press: activate/deactivate T9 mode)

The mode in which you type the text is displayed at the right top of the screen.

The **ABC mode** is used to write words that do not exist in the dictionary. To get a particular character, please press the corresponding key several times.

Mode 123 is used for numbers.

Upper case/Lower case/123 mode

A short press on the key switches one editing mode to another.

Punctuation characters

Punctuation characters are obtained by pressing the **1** key (except in **123** mode), or with the help of **Insert** mode (fast access by briefly pressing the # key).

Accented characters

Accented characters are generated automatically in T9 mode (long press on the key).

In ABC mode accented characters are available by pressing the key supporting the non-accented character repeatedly.

Saving the message

- Select **Save**.
- Select where you want to save it (SIM card or phone). It is saved in the **Drafts** menu.

Sending the message

- Once the text entered, press **OK** or press [**Options**] and select **Add recipient**.
- The **Contacts** menu is displayed.
- Select:
  - **Add new number** or
  - **Add new email** or
  - a contact in the list.
- Press **OK** and select **Send**.

Note: It is possible that the voice message format (.amr) is not supported by some PC. See your PC provider.
Warning: some message sendings may fail if the message content is too big.

MMS postcard

Messaging/Create new/Live! Postcard

With the MMS postcard option, Vodafone prints on paper a photo you have selected in your phone and Vodafone sends it by post to the receiver.

Select the photo you want to send and press **OK**. Then press **Insert**.

Type the message to be printed on the postcard and press **OK**. Enter the receiver´s name, address, Post Code and City and optionally County and Country using **OK** to advance.

Finally, to send the postcard press [**Options**] and select **Send**.

Note: In some countries or models this service may not be supported (check with your local Vodafone Service provider).

Receiving messages

When you receive a message, the phone plays the ring tone that you selected, and a message icon comes on the screen of your phone.

If you do not read the messages, this icon remains displayed on the screen. When it flashes, the memory is full.

Receiving multimedia objects can take several seconds. An icon is flashing when the download of your message is in progress.

Note that you have two different possibilities for receiving MMS: automatically or manually; if « manual mode » is activated, then you will receive only a notification in your Inbox, meaning that a MMS is available on the MMS Server; select Retrieve in the options when you want to retrieve the MMS from the network.

For more details about automatic and retrieval modes, see **Settings** on page 33.

Please contact Vodafone to get more information on multimedia objects downloading.

Received messages are stored in the SIM card or in the phone until you choose to delete them.

Inbox

Messaging/Inbox

Each message shows the presence of any attachments, the time and date the message was received and its size.

Messages are listed in chronological order, the latest one being displayed first.

The quantity of Not Read and Not Retrieved messages is shown. Not Retrieved and Not Read messages are shown in bold.

Select a message and press **OK**. Choose one of the options given.

If there are enclosures in a message, you can extract them in order to be used later on (they are stored in the phone memory).

Drafts

Messaging/Drafts

When you save a message, it is stored among the drafts.

If you select a message and press **OK**, you can modify it.

If you want to send it, press [**Options**] and select **Send**, then enter the recipient's number.

Sent Messages

Messaging/Sent Messages

This menu is used to store all your sent messages if you activated the option **Save sent msgs** in the **Settings** menu (see page 33).

Too many messages saved will quickly fill up the available memory and no further messages will be received.

For each message, its characteristics (shown with an icon) and the time (or date) of sending are displayed on the screen.

Select a message and press **OK**.

Outbox

Messaging/Outbox

This menu displays the messages that have not been sent. You can therefore send them again.

Messenger

(Service depending on the operateur)

Messaging/Messenger

The **Messenger** menu allows you to speak in real time with your contacts having the same connection type, from your phone or your PC.

At any time, wherever you are, you can send them a message as easily as a SMS.

Note: This service leads to a cost. For more information, contact your operator.

Creating an identifier

To use Messenger you need to create an identifier (name) and log on to the operator server: help screens guide the user when logging on for the first time.

After logon, the list of contacts is displayed.

Remark: An icon is displayed on the sleep-mode screen when you are logged on to Messenger.

Adding contacts

To add a contact, go into "**Choice**" and into the "**Add contact**" option, then enter your contact's telephone number or Messenger identifier.

An icon opposite each contact indicates whether your contact is on line, available, etc.

Conversation

To start a conversation with one of your contacts, all you do is select your contact then send a message by going into "**Choice**" then the "**Write**" option: the text you sent and your contact's reply both appear in the conversation screen.

Voicemail

Messaging/Voicemail

This function allows you to call your voicemail.

Note: if your voicemail number has not been entered yet, you must enter it in the menu **Settings**/**Calls**/**Voicemail**.

Templates

Messaging/Templates

When composing a message, if you selected the **Save as Template** option, the template is saved in this menu.
The same options as for the drafts are available for the templates.

Live! Studio

(Service depending on the operateur)

Messaging/Live! Studio

With this link, you can view your stored pictures and sounds in the Vodafone live! live! Studio site.

Note: In some countries or models this service may not be supported (check with your local Vodafone Service provider).

Settings

Messaging/Settings

The SMS settings are: Save sent msgs, Delivery report, Period of validity, Message format, Msg centre n°.
The MMS settings are:

- **Save sent msgs**: it is highly recommended that you keep this function deactivated, in order to avoid a full memory.
- **Retrieval mode**: if you are in a poor coverage area, it may be more convenient to choose the manual retrieval mode which gives you the retrieve later option.
- **Priority**: selection of a priority to send a message.
- **Request delivery**: request of a delivery report when sending a message.
- **Period of validity**: during that period, the network provider will try to send the message.

Advanced settings

- **Send delivery rep**: sending a delivery report when receiving a message.
- **MMS ignore**: if you want to deactivate the reception of any MMS in your phone.
- **MMS server**: to select another MMS provider, or set the parameters of a new MMS provider.
- **Display Bcc**: if you want to activate/deactivate this display.
- **Sender visibility**: you choose to display or not your phone number on the receiver's phone screen, with that message.
- **Maximum Size**: if you want to activate/deactivate the option of maximum size supported for the MMS.

Local information

Messaging/Local info

This menu is used to activate reception of local information broadcast by the network.
You can choose whether you want to receive this information or not (please contact Vodafone).

Groups

Messaging/Groups

This menu displays the mailing lists created in the phonebook.

Memory

Messaging/Memory

You may know the memory available for saving messages.
Choose one of the options given: SMS or MMS.
The SMS screen displays the memory available either on the SIM card or on the phone.
The MMS screen displays how much memory is used in Kbytes.

Camera

This menu allows you to take photos or videos and use them for different purposes. For instance, you can send them to another phone or an Internet address, store them, use them as wallpapers or screensavers.

Taking and saving a photo

Settings before taking a photo

Zoom:

To activate zoom, use the ▲ and ▼ keys or the side keys (**+** and **-**).

Note: if the zoom selected does not match with the storing format, the photo is automatically saved in an appropriate format

Other settings (pressing [**Options**]):

- **Activate timer**: to take a photo with a 5, 10 or 15 second time delay.
- **Effects**: to select an effect (sepia, negative or grey levels).
- **Exposure**: to select luminosity (indoor, sunny, etc.).
- **Click sound**: to select the sound you will hear when taking a photo.
- **Photo quality**: to select the photo quality.
- **Photo format**: to select the format in which your photo will be saved.
- **Go to video** (see on page 36).

Taking a photo

- Select the **Camera** menu. Look into your phone display and position your subject. Move your phone to position your photo.
- Press **OK** (or on the side key), the photo is taken and stays on the phone display.

Warning: *if you press* [**Back**]*, you will go back to the previous screen and lose the photo you have just taken.*

- Press [**Save**] to save your photo and display the different options:
  - **Send By:** allows you to send the photo by IrDA, MMS or Bluetooth.
  - **Take photo**: allows you to take a new photo.
  - **Editor**: various options to modify a photo.
    Zoom: allows you to magnify certain parts of your photo,
    Adjustment: allows you to improve contrast,
    Emboss: allows you to modify a photo with an embossed grey tint,
    Negative: allows you to change a photo into negative,
    Grey Scale: allows you to change color into black and white,
    Contrast: allows you to increase or decrease the contrast of your photo,
    Sharpen: allows you to sharpen a photo,

Blur: allows you to add blur to a photo,
Sepia: allows you to change colors into sepia,
Shape: allows you to shape a photo,
Brigthness: allows you to increase or decrease the brightness of a photo,
Solarize: allows you to increase or decrease the solarize of a photo,
Saturation: allows you to increase or decrease the color saturation.

- **Rename**: allows you to modify the name of a photo.
- **Add to contact**: allows you to assign a photo to a contact saved in the phonebook.
- **Use as**: allows you to select the photo as wallpaper or screensaver.

If there is not enough memory to save the photo, a warning message appears, prompting you to confirm whether you want to go on.

Note: using the camera during a call may disturb the call quality.

Taking a video

- Select the **Camera** menu.
- Press [**Options**] and select **Go to video** or press the ► key.
- If necessary, select the following settings pressing [**Options**]:
  - **Video sound:** allows you to record wether not the sound when recording a video.
  - **Size restriction:** allows you to choose a video size.

Press **OK** to record then press **OK** when you want to stop recording.

Note: the phone automatically stops recording when the maximum size available is reached.

- Press [**Options**] to display the options:
  - **Playback**: allows you to play the video.
  - **Save**: allows you to save the video.

Note: the videos are saved in the phone with a 3gp format.

My Files

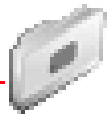

This menu contains photos and videos taken and saved with your phone, the sounds recorded and all the downloaded objects (pictures, ring tones, etc).

Pictures

My Files/Pictures

To display a picture, select it and press **OK**.

To display others, press ▲ or ▼.

To display the different options, press [**Options**].

- **View**: allows you to display the picture.
- **Send By**: allows you to send a picture by MMS, Bluetooth or IrDA (NB: you may not send any copyrighted picture).
- **Add to contact**: allows you to assign a picture to a contact saved in the phonebook.
- **Use as**: allows you to use the picture as a wallpaper or screen saver.
- **Rename**: allows you to rename a picture.
- **Delete**: allows you to delete a picture.
- **Editor**: see chapter **Camera**.
- **Take picture**: allows you to take a new picture.
- **Details**: properties of the picture selected.
- **Memory**: memory size used by the pictures.

Sounds

My Files/Sounds

To listen to a sound, select it and press **OK**.

To listen to others, press ▲ or ▼.

To display the different options, press [**Options**].

- **Listen**: allows you to listen to the sound.
- **Send By**: allows you to send a sound by MMS, Bluetooth or IrDA.
- **Add to contact**: allows you to assign a sound to a contact saved in the phonebook.
- **Ring tone**: allows you to add a sound to the ring tones list.
- **Rename**: allows you to rename a sound.
- **Delete**: allows you to delete a sound.
- **Rec. Sound**: allows you to record a new sound.
- **Details**: properties of the sound selected.
- **Memory**: memory size used by the sounds.

Videos

My Files/Videos

To display a video, select it and press **OK**.

To display it in portrait or landscape mode, press ◄ and ►.

To display others, press ▲or ▼.

To display the different options, press [**Options**].

- **Play**: allows you to display the video.
- **Send By**: allows you to send a video by MMS, Bluetooth or IrDA.
- **Rename**: to modify the name of a video.
- **Delete**: to delete the video.
- **New video**: allows you to take a new video.
- **Details**: properties of the video selected.
- **Memory**: memory size used by the videos.

Exchanging objects with a PC and your phone

You must connect them with a USB cable Bluetooth or by infrared (see chapter **Connectivity**).

Vodafone live!

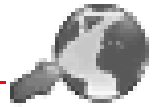

Vodafone live! is a mobile internet portal service which allows you to obtain information such as weather conditions, news, sport and download new ringtones, wallpapers, music, videos, etc.

The browser navigator is under licence:

OPENWAVE
© 1995-2001
RSA Data Security

BROWSER BY
OPENWAVE

The browser navigator and the softwares included are the exclusive property of Openwave. For this reason, it is forbidden to modify, translate, disassemble or even decompile all or part of these softwares.

Vodafone live!: opens the Vodafone live! portal.

Enter URL: allows to enter URL addresses.

Bookmarks: allows to store bookmarks (addresses of Internet sites).

A bookmark stored in the list can be modified, sent or deleted.
You can receive bookmarks and add them to this list.

History: backward and forward navigation of the pages displayed are kept in memory.

Settings: allows you to modify profiles or create new ones.

What's New? - News - Sport: connection to information site on Vodafone live! portal.

More Games - More Sounds - More Pictures: allows you to choose more games, ringtones or images to use on your phone. Connect to the Vodafone live! portal.

Games and applications

Entertainment and **Organiser**/ **Applications** menus

Each game has a tutorial section to run you through the rules and actions.

And when you've completed these games, why not download some more?

Organiser

Alarm

Organiser/Alarm

This menu allows you to set and activate the alarm.
To activate the alarm, select **Activate**.
Set the wake-up time by entering the numbers directly and validate.
The alarm icon appears on the idle screen.
The alarm works even when the phone is switched off.

Timer

Organiser/Timer

This menu is used to set and activate the timer.
To activate the timer, select **Activate**.
Set the duration (hours/minutes) by entering the numbers directly and validate.
The alarm icon appears on the idle screen.

Calendar

Organiser/Calendar

This menu gives you access to your diary and get to a day, week, month or specific date. It lets you add events, access the global actions for all the events and manage them by event category.

- **Add Written Evt**/**Add Vocal Evt**: allows you to add events of the text or voice type. Fill in the different items. Save the event.
- **Delete**: allows you to schedule the deletion of events that took place more than one day, week or month ago.
- **Memory**: allows you to view the memory capacity used by the different functions of your diary.
- **Delete**: allows you to delete the event selected.
- **Delete all**: allows you to delete all the events from your diary.
- **Categories**: allows you to see the different event categories, assign a specific ring tone to each individual category, know the number of events in each category and see them.

- **Synchronize**: You can synchronize your organizer with your archives stored in Vodafone's network depending on the options offered by your subscription.
  The local synchronisation with your computer is only computer originated, from Wellphone software; you have only to activate infrared, Bluetooth or configure your USB connection in your phone.

The other menus are:

- **Monthly view**: allows you to access events on a month-by-month basis.
- **Weekly view**: allows you to access events on a week-by-week basis.
- **Daily view**: allows you to access the events for the current day and the actions possible on any event (see, modify, delete and send).
- **Date view**: allows you to access events at a specific date.

Calculator and converter

Organiser/Calculator

This menu allows you to use your phone as a calculator.

Use the following keys to make calculations: ▲: Add, ▼: Subtract, ►: Multiply, ◄: Divide, * #: Decimal point.

If no calculations are being run, pressing [**Convert**] allows you to convert one currency to another.

Enter a value and press ▲ to convert from one currency to another, or press ▼ to convert back.

Pressing [**Options**] allows you to use the following options:

Rapid exchange

If the Rapid exchange is activated, the converter will work in the idle screen by entering the desired numbers and pressing **OK** to convert.

Exchange rate

Enter the exchange rate corresponding to the chosen currency.

Currency

Enter the two types of currency to be converted.

Goto Calculator

This option allows you to use immediately the value converted in the **calculator**.

Todo

Organiser/Todo

This menu allows you to write or record tasks, called Todo, access category-based Todo management and delete all the Todo's.

Select the **Todo menu** and press **OK** to display the following options:

- **Write Todo**: allows you to write a text Todo. Fill in the different items. Save the Todo.
- **Record Todo**: allows you to record a voiceTodo. Fill in the different items. Save the Todo.
- **Categories**: allows you to see the different Todo categories, assign a specific ring tone to each individual Todo, know the number of Todo's in each category and see them.
- **Delete all**: allows you to delete all the Todo's from your Todo.
- **Memory**: allows you to view the memory used by the different functions of your Todo.
- **Synchronise**: allows you to synchronise a Todo with a computer (depending on the options offered by your subscription).

To display a Todo, select it in the list and press **OK**.

To display the different options, press [**Options**].

- **Modify Todo**: allows you to modify the Todo properties.
- **Delete**: allows you to delete the Todo.
- **Send By**: allows you to send the Todo by MMS, Bluetooth or IrDA (see chapter **Connectivity**).

This menu allows you to listen to musics in a contiuous way like a portable music player.

If you do not have any music in memory, use Vodafone live! to download some or connect your phone to a PC (see chapter **My Files**).

Music Player

Two tabs are displayed: **Player** and **Library**.
Select **Library** pressing ►. The directory of the music contained in the phone and in the memory card (if it is present) is displayed.
Select [**Options**]: you can play all the music directly or manage them in lists.

Creating a playlist

- Select [**Options**] in the **Library** tab.
- Select **Create playlist**.
- Type a name for your playlist and press **OK**.
- The list of the sounds is displayed in two tabs: those contained in the phone memory or pressing ► those contained in the memory card.
- Select the sound you want in your playlist and press **OK** to add the music to the playlist ; do it again if you want add others or select **Playlist**: [**Options**]/**Add to playlist**/**All** to add them all to the playlist.

When pressing [**Options**] on a playlist, you can display or play the contents, add music, create a new playlist, delete one or modify its name.

Playing your music

Player tab: This tab opens as soon as a music or a list of music, has been selected to be played.
To display the different options, press [**Options**]:

- **Play**: to play musics of the playlist.
- **Remove from list**: to remove the music selected from the playlist.
- **Shuffle**: to play the musics in a random way.
- **Add to Playlist**: to set a new playlist.
- **Play options**: to play the musics one by one or in a continuous way.
- **Send By**: to send the music by IrDA or Bluetooth.
- **Rename**: to rename the music.
- **Priority to**: to give priority to phone (in case of incoming call) or to playing music.
  Note: music is in pause in case of incoming call, it automatically resumes at the end of the call.
- **Details**: properties of the music selected.

Settings

Phone

Silent mode

This menu allows you to switch to Silent mode.
Activate or **deactivate** Silent mode and validate.
Silent mode can also be accessed via the idle screen by holding down the # ♪ key.
When the phone is in silent mode, this relevant icon appears on the idle screen.
In this mode, the ring tone will not function, except for the alarm clock.
Note: if you have activated the silent mode, it does not remain after switching off your phone.

Ringtone

This menu allows you to allocate a ringtone to different functions.
Select the function on which you want to choose a ringtone.
Select the ringtone from the proposed list and validate.
Note: in the list, there are the phone default ringtones and also the ringtones downloaded in **My Files**/**Sounds**.
Adjust the volume with the ▲ and ▼ keys or side keys from idle screen and validate.
You can deactivate the sound by pressing the # ♪ key.

Vibrate

This menu allows you to activate the vibrate mode for calls.
Select the vibrate mode from the proposed choices and validate.

Languages

This menu allows you to choose your phone's display language.
Select your language and validate.
If you select **Automatic**, the language used will be the one relative to your SIM card.

Beeps

This menu allows you to activate a beep for the battery, the keypad or the network.

Select the type of beep you want to allocate from the proposed choices and validate. Activate or deactivate the beep and validate.

If you select keypad beeps, different options are given.

Master Reset

This menu allows you to reset the phone parameters.

Time and Date

Set Date/Time

This menu allows you to set the date and time of your phone.

- **Date:** set the date by entering it directly in digital form or by using ▼ or ▲.
  Use the ◄ or ► keys to access the next (or previous) entry field.
  Once the date is correct, validate it.
- **Time:** same procedure as for setting the date.

Date update

This menu allows you to choose manual or automatic updating of date and time (after switch off of your phone or when going abroad for instance) (service depending on the network).

Please select Automatic, Manual or On demand and press **OK**.

View

This menu allows you to select the date and time display.

In the list that appears, select the desired display type between:

- Analog,
- Digital,
- None,

and validate.

Time zone

This menu allows you to change time in relation to the GMT time.

Choose the time of the country desired by calculating the time from the GMT time.

Daylight savings

This menu allows you to set your phone to the summer/winter time.

Select 1 h, 2 h **Summer time** or **Winter time** depending on the season, and validate.

Shortcuts

(See **Speed Dialing** on page 25).

Display

Wallpaper

This menu allows you to display the background picture you want on your phone.

Note: you can select wallpapers through the phone default wallpapers, the pictures downloaded in **My Files/Pictures** and the pictures of your memory card.

- *No wallpaper*: select **None**.
- *Several wallpapers in a random way*: select **Random**.
- *A specific wallpaper*: select **My Files**:
  - Press [**Select**] on the wallpaper name, the wallpaper is selected.
    or
  - Press **OK**: the picture is displayed. Press [**Select**] to select it as your phone wallpaper or press ▲ and ▼ keys to display others.

Operator logo

This menu allows you to display your operator's logo on the idle screen.

On the menu, please select the menu and [**Select**].

Select **Activate** or **Deactivate** and press [**OK**].

Screensaver

This menu allows you to display an animation when the phone is in standby mode.

Select one of the screensavers given and [**Select**].

Note: there are the phone default screensavers and also the pictures downloaded in **My Files/Pictures**.

The chosen screensaver appears on the screen, select it.

Energy saving

Eco mode

You can select one of the following eco modes:

- **Complete**: the screen is off. Press **OK**, the red or green key to turn on the backlight and see the time. Press ∗ **OK** to light up the screen and enter the menus. This mode gives the maximum efficiency of the battery life.
- **Partial**: the screen is off. Press the red key to light up the screen and enter the menus.
- **Unlocked key.**: the keypad is always active, meaning that when you press any key, it allows you to light up the screen and enter the menus. This mode decreases the battery life.

Backlight

- **Full backlight**: both the screen and the keypad are lit up.
- **Screen only**: only the screen is lit up.

Note: in any case, after a certain time of inactivity, the backlight will be automatically turned off to save battery life.

Contacts

- **Contacts list**: This menu allows you to select the default phonebook (SIM, Phone, SIM and Phone) displayed when the phone switches on.
- **Sorting**: This menu allows you to select the way to sort contacts in the phonebook (by name or first name).

Contrast

This menu is used to adjust screen contrast.

On the **Display** menu, please select the **Contrast** menu and [**Select**].

Adjust the contrast using the navigation stick.

Messaging

This menu allows you to set SMS or MMS sending options and to enter the voicemail number (see chapter page 33).

Connectivity

You can exchange with other devices (PC, mobile phones, personal assistants, printers, etc.) various data: pictures, sounds, photos, videos, Todo tasks, organiser events, contacts, etc.

Data exchange can be done through:

- a serial or USB cable,
- an infrared connection,
- a Bluetooth connection.

If you have inserted a memory card in your phone, it is considered as an additional memory in the Windows explorer files directory; you can copy/paste.

If you want to exchange objects between the phone memory and a PC, you must install the Wellphone software provided on CD: select Multimedia to open, from the PC, the phone files explorer.

To save contacts, events or tasks, the Wellphone Multimedia software provided on the CD with your phone (also available from http:/www.wellphone.com) must be installed on a PC.

Note: If a call comes in during an exchange of data with your PC, the link will be interrupted and will have to be manually re-started.

Bluetooth

This menu allows you to set your phone Bluetooth connection in order to communicate with other devices equipped with Bluetooth: for example, an audio connection with a pedestrian kit, a car kit or a data connection with a PC.

Bluetooth is a free wireless connection, with a 10 metre maximum range.

Paired devices: allows you to search for devices which may connect with Bluetooth link with your phone (for instance: headset).

Mode: allows you to activate the phone Bluetooth connection.

- Off: Bluetooth connection impossible.
- On and hidden: your phone is not detected by the other devices but the phone detects the other devices.
- On and visible: your phone can be detected by another device.

My Bluetooth name: allows you to assign a name to your phone for the Bluetooth connection. This name is displayed on the devices connected.

Infrared

This menu allows you to activate or deactivate the infrared connection.

Serial Speed

This menu enables you to select the speed to be used for data exchanges via your phone's serial port. Except for specific requirements, it is advisable to stick to the default setting: **Automatic**.

Car kit

Car kit - Headset

These menus allow you to configure the options of the phone with a pedestrian kit or a car kit.

Synchronize

You can synchronize your phonebook, your organizer or your To Dos with your archives stored in Vodafone's network depending on the options offered by your subscription.

The local synchronisation with your computer is only computer originated, from Wellphone software; you have only to activate infrared, Bluetooth, or configure your USB connection in your phone.

USB Mode

This menu allows you to select a mode to connect the phone to a peripheral with the USB cable available as an accessory.

- **At Plugging-in**: If you select this option, when connecting a USB cable, the phone asks you to select the mode you want (**Modem** or **PictBridge**).
- **Modem**: to exchange data between the phone memory and a PC.
- **PictBridge**: to connect the phone to a printer (printing photos) without using a PC.

Calls

Call divert

Depending on your subscription, this service allows you to forward incoming calls to a different number or to the voicemail.

Choose the type of forwarding you want from the options available.

Counters

This menu allows you to consult the duration of the up calls.

It can also be used to check the volume of data exchanged in GPRS.

Select one of the options given.

Display numbers

This menu allows you to modify the status of the display number function.

Select one of the options given: Anonymous mode, My number, Callers' number.

Anonymous mode

You have the ability to mask your number on the phone of the person you are calling.

- **Preset**: network default mode.
- **No**: you choose not to activate anonymous mode and then to display your number.
- **Yes**: you choose to active anonymous mode and then not to display your number.

Call waiting

(Network dependent service)

During a call, you may be informed that a caller is trying to reach you: you hear a special tone. The caller's identity is displayed on the screen (name or number).

You can **activate, deactivate,** or **status** of the call waiting service in order to check if it is active or not.

During a call, if a second caller tries to contact you, the screen displays the call warning.

Automatic redial

This menu allows you to call back a caller you have not managed to reach.

You can set the redial function to inactive, on request or systematic.

If you choose **On demand**, your phone will offer to redial your caller automatically if his number is busy.

Blacklist

The blacklist is used to limit failures on automatic calls (calls generated by the automatic redial function or by applications: data, fax for example).

When several automatic calls failed with a number (number busy or unknown), this number is put in the blacklist and no automatic call will be done with this number any more until you delete it from the blacklist.

Note: this function does not apply to the calls performed manually.

Voicemail

This is used to store your voicemail access number.

Save new number

When calling, if you want a prompt asks you to save the number in the phonebook, select **Activate**.

Networks

This menu allows you to configure network preferences.

Choose **Selection** to activate (automatically or manually) one of the networks accessible in the area in which your are located.

Choose **Preferred** to view all the pre-registered networks.

Choose **GPRS** to select the way you want to be attached on the GPRS network: always, or only when needed (when launching a data connection).

Choose **Network type** to select your network: GSM-DCS or PCS (depending on model).

Security

PIN number

This menu allows you to activate and modify your phone's PIN.
To modify the PIN, select **Modify PIN code** and [**Select**].
Enter old PIN and validate.
Enter new PIN twice and validate.
To activate or deactivate the PIN, select the **Control PIN** menu and **[Select].**
Enter PIN and validate.
Select **Activate** or **Deactivate** and validate.

PIN2 number

You have a second PIN number to allow you to access certain functions.*
** These functions may or may not be available depending on your SIM card.*
Proceed as above in order to activate, deactivate or modify PIN number 2 of your phone.

Phone code

The Phone code menu allows you to activate the phone code so that it is requested and checked whenever the phone is switched on if a different SIM card is used. This code is automatically linked to the SIM card installed when the phone is activated, for example to protect the phone if stolen.
Select **Check** and [**Select**].
Enter 0000 (the factory code, by default) and validate.
Select **Activate** or **Deactivate** and validate.
To modify the phone code, select **Modify** and validate.
Enter old phone code and validate.
Enter new phone code and validate.
Enter phone code again to confirm it and validate.

Confidentiality

This menu allows the activation or deactivation of automatic deletion, after power off/on, of outgoing calls, messages stored or organizer events.

Select **Activate** or **Deactivate** and validate.

Operator

This menu allows you to modify the call barring.

Access to this service depends on your type of subscription.

Call barring

This menu allows you to block the sending or receiving of certain calls.
Before you can use this service, a password will be provided by Vodafone when you take out your subscription.
Access to this service depends on your subscription type.

To activate call barring :

- Select incoming or outgoing calls.
- Select the call type on which you want to activate call barring.
- Select:
  - either All,
  - or If roaming, if you are away from your home country and if roaming is available, only incoming calls will be blocked.
- Select Activation and enter password.

Fixed dialling

This menu allows you to restrict the outgoing calls.

The availability of this menu depends on your SIM.

Enter PIN2 number and validate.

Select **Activate** or **Deactivate** and validate.

Proceed as for any other phonebook.

When activating this function, only the numbers stored in the phonebook can be called.

This phonebook is linked to the SIM card, and its size depends on the card's capacity.

Cost

This menu allows you to control the cost of your calls (*).

The **Cost** menu (*) lets you check the cost of the last call you made and of all the calls you made since you last deleted them.

The **Delete costs** menu (*) lets you delete the cost of your last call and reset the cost counter after entering your PIN 2 code.

(*) WARNING

Depending on how the networks and associated subscription cards are configured, some functions may be unavailable (these are marked out with *).

Media Player

- **Play options**: to play the music one by one or in a continuous way.
- **Player priority**: to give priority to phone (in case of incoming call) or to playing music.

Browser

This menu allows you to set various parameters needed for Vodafone live! browser connection.

You can add or modify URL addresses.

Camera

This menu allows you to set the camera features of your phone.

- **Timer duration**: this menu enables you to take a photo with a 5, 10 or 15 second time delay.
- **Click sound**: This menu allows you to select the sound you will hear when taking a photo.
- **Photo format**: This menu allows you to choose the format in which your photo will be saved.
- **Photo quality**: This menu allows you to select the photo quality.

Video

This menu allows you to set the video features of your phone.

- **Video sound**: This menu allows you to select wether or not to record the sound when taking a video.
- **Video restriction**: This menu allows you to choose a video size.

Technical features

Weight: 84 g
Size: 105 x 46 x 14 mm
Original battery: Lithium ion 850 mAh
Battery life calls/standby: up to 4 h/350 h (these values are theoretical ones and given for information only)
Multimedia objects supported:
- Audio formats: iMelody, Midi, wave, AMR, MP3, AAC
- Video formats: 3gp, svg
- Graphic formats: wbmp, bmp, png, gif, animated gif, jpeg

Size of memory available for messages: up to 200 SMS
Size of memory available for the phonenook and the multimedia objects: 12.0 MB
Maximum size of each message:
- SMS < 160 characters
- MMS < 100 kB for outgoing, 100 kB for incoming messages (depends on the phone configuration and Vodafone reservations)

Using temperature: from - 10°C to + 55°C

Warranty

You must always use your phone for the purpose for which it was designed, under normal operating conditions. Sagem Communication declines all responsibility for any use outside of the scope of its designed purpose and for any consequences of this use.

The software program developed by SAGEM remains the exclusive property of Sagem Communication. It is therefore highly prohibited to modify, translate, de-compile or disassemble this software program or any part thereof.

Usage precautions

Your phone allows you to download ring tones, icons and animated screensavers. Some of these items may contain data that may cause malfunctions of your phone or data losses (virus for example).

For this reason, Sagem Communication rejects all responsibility concerning (1) the reception of downloaded data or losses of the said data, (2) the impact on the operation of the phone and (3) damages resulting from receiving the said downloaded data or loss of said data. In addition, Sagem Communication states that a failure caused by receiving downloaded data that do not comply with the specifications set by Sagem Communication is excluded from the warranty. Consequently, the diagnosis and repair of a phone infected by the said downloaded data will be at the expense of the customer.

Any content that you download to your phone may be protected by copyright belonging to third parties and consequently you may not have the right to use this content or its use may be restricted. Consequently it is up to you to ensure that you have permission, such as under the terms of a license agreement, to use any content that you download. Furthermore, Sagem Communication does not guarantee the accuracy nor the quality of any content that you download. You alone are responsible for the content that you download to your mobile phone and how you use it. Sagem Communication cannot be held responsible for this content nor for its use.

It is your responsibility to ensure compliance, at your own expense, with the laws and regulations applicable in the country where you use your phone.

Warranty conditions

Whenever you wish to make use of the warranty, please contact your vendor and present him with the purchasing paperwork that he gave you.

If a fault occurs, he will advise you.

1.

The new phone (excluding consumables), including new accessories bundled with the phone, are guaranteed by Sagem Communication, parts and labour (apart from travel) against any manufacturing fault for a period of twenty four months (except for batteries for which the period is twelve months) with effect from the sale of the phone to the customer, on presentation of the paperwork stating the purchase date of the phone.

Phones that have been repaired or replaced as standard during the warranty period stated above are guaranteed (parts and labour) until the later of these two dates:

Expiry of the guarantee period of twenty four months stated above or three (3) months with effect from the date of support provided by Sagem Communication.

Your legal rights under the terms of applicable national law as well as your rights in relation to your retailer, as set out in the sales contract, remain applicable and are not in any way affected by this guarantee.

In any disputes, the phone is covered by the legal warranty against the consequences of faults or hidden defects in compliance with articles 1641 and subsequent of the French civil code.

2.

All faulty phones under warranty will be replaced or repaired free of charge at Sagem Communication's option (with the exclusion of repair of any other damage), once it has been specified that the work required for the application of the warranty will be done in a workshop and that the return costs (transport and insurance) of the phone to the address to be indicated to it by the Sagem Communication after-sales service, whose phone number will appear on the delivery note, will be charged to the customer.

Subject to essential legal provisions, Sagem Communication does not accept any warranty, explicit or implicit, other than the warranty provided expressly in this chapter, nor shall Sagem Communication accept responsibility for any immaterial and/or indirect damages (such as loss of orders, loss of profit or any other financial or commercial damage) under the warranty or not.

3.

The acceptance of a phone under warranty demands that a purchase document that is legible and without modi-fication, stating vendor's name and address, date and place of purchase, type of phone and IMEI, are attached to the warranty, and that the information on the phone identification label is legible and that this label or any other seal has not been tampered with.
The warranty applies in normal conditions of use.
Prior to sending the phone for repair, it is the customer's responsibility to backup at his expense the customized data stored in the phone (phonebook, settings, wallpapers). A list of backup facilities can be provided by Sagem Communication on request. The responsibility of Sagem Communication cannot be invoked if damage occurs to customer files, programs or data. The information or operating elements and the contents of files will not be re-installed in any case in the event of loss.
Sagem Communication may decide, at its option, to repair the phone with new or reconditioned parts, replace the phone with a new phone or, in any dispute, a phone in good working condition. During its work Sagem Communication reserves the facility to make, where necessary, any technical modifications to the phone where these modifications doe not adversely affect its initial purpose.
Faulty parts to be replaced during a repair under warranty will become the property of Sagem Communication.
The phone repair and standstill time during the warranty period may not lead to an extension of the warranty period as stated in article 1 above, provided no other vital provisions have been agreed.
The application of the warranty is subject to the full payment of the sums due for the phone when the request for support is made.

4.

The following are excluded from the warranty:

Breakdowns or malfunctions due to non-compliance with the installation and use instructions, to an external cause of the phone (shock, lightning, fire, vandalism, malice, water damage of any type, contact with various liquids or any harmful agent, unsuitable electric current...), to modifications of the phone made without the written consent of Sagem Communication, to a servicing fault, as described in the documentation supplied with the phone, to lack of supervision or care, to poor environmental conditions of the phone (especially temperature and hygrometry, effects of variations in electric voltage, interference from the mains network or earth) or even due to a repair, a call-out (opening or trying to open the phone) or to servicing done by personnel not approved by Sagem Communication.

Damage resulting from inadequate packaging and/or poor packing of the phone sent back to Sagem Communication.

Normal wear and tear of the phone and accessories.

Communication problems linked with a poor environment, especially:

Problems accessing and/or logging onto the Internet, such as breakdowns of the access network, the failure of the subscriber's or his correspondent's line, transmission fault (poor geographic coverage by radio transmitters, interference, disturbance, fai-lure or poor quality of phone lines...), a fault inherent to the local network (cabling, file server, user phone) and/or transmission network fault (interference, disturbance, failure or poor quality of the network...).

Change of parameters of the cellular network made after the phone was sold.

Supply of new software versions.

Current servicing work: delivery of consumables, installation or replacement of these consumables…

Call-outs for phone or software modified or added without the written consent of Sagem Communication.

Faults or disruptions resulting from the use of products or accessories not compatible with the phone.

Phones returned to Sagem Communication without having complied with the return procedure specific to the phone cove-red by this warranty.

The opening or closing of a SIM operator key and call-outs resulting in the non-operation of the phone resulting from the opening or closing of SIM operator key done without the agreement of the original operator.

5.

In the cases of warranty exclusion and of expiry of the warranty period, Sagem Communication shall draw up an estimate to be given to the customer for acceptance before any call-out. The repair and carriage costs (there and back) given in the accepted estimate will be charged to the customer.

These provisions are valid unless a special written agreement has been made with the customer. If one of the provisions turns out to infringe a legally essential rule that consumers could have the benefit of under the national legislation, this provision will not be applied, but all other provisions will remain valid.

End User Licence Agreement (EULA), for the software

CONTEXT AND ACCEPTATION OF THE AGREEMENT

You have acquired a Mobile Phone device ("DEVICE"), manufactured by Sagem Communication (SAGEM), that includes software either developed by SAGEM itself or licensed third party Software suppliers ("SOFTWARE COMPANIES") to SAGEM with the rights to sub-license it to the purchaser of the device. Those installed software products whatever their company of origin, and wherever the name of the company of origin is indicated of not in the DEVICE documentation, as well as associated media, printed materials, and "online" or electronic documentation ("SOFTWARE") are protected by international intellectual property laws and treaties. The SOFTWARE is licensed, not sold. All rights reserved.

IF YOU DO NOT AGREE TO THIS END USER LICENSE AGREEMENT ("EULA"), DO NOT USE THE DEVICE OR COPY THE SOFTWARE. INSTEAD, PROMPTLY CONTACT SAGEM FOR INSTRUCTIONS ON RETURN OF THE UNUSED DEVICE(S) FOR A REFUND. **ANY USE OF THE SOFTWARE, INCLUDING BUT NOT LIMITED TO USE ON THE DEVICE, WILL CONSTITUTE YOUR AGREEMENT TO THIS EULA (OR RATIFICATION OF ANY PREVIOUS CONSENT)**.

SOFTWARE includes software already installed on the DEVICE ("DEVICE Software") and Software contained on the CD-ROM disk ("Companion CD"), if any is supplied with the product.

GRANT OF SOFTWARE LICENCE

This EULA grants you the following licence:

DEVICE Software. You may use the DEVICE Software as installed on the DEVICE. All or certain portions of the DEVICE Software may be inoperable if you do not have and maintain a service account with an appropriate Mobile Operator, or if the Mobile Operator's network facilities are not operating or configured to operate with the DEVICE software.

COMPANION CD. If any is supplied, additional software for your personal computer is included with your DEVICE. You may install and use the software component(s) contained in the Companion CD only in accordance with the terms of the printed or online end user license agreement(s) provided with such component(s). In the absence of an end user license agreement for particular component(s) of the Companion CD, you may install and use only one (1) copy of such component(s) on the DEVICE or a single computer with which you use the DEVICE.

Security Updates. The SOFTWARE may include digital rights management technology. If SOFTWARE does contain digital rights management technology, content providers are using the digital rights management technology ("DRM") contained in the SOFTWARE to protect the integrity of their content ("Secure Content") so that their intellectual property, including copyright, in such content is not misappropriated. Owners of such Secure Content ("Secure Content Owners") may, from time to time, request manufacturers or SOFTWARE SUPPLIERS to provide security related updates to the DRM components of the SOFTWARE ("Security Updates") that may affect your ability to copy, display and/or play Secure Content through the SOFTWARE or third party applications that utilise the DRM.

You therefore agree that, if you elect to download a licence from the Internet which enables your use of Secure Content, Suppliers may, in conjunction with such licence, also download onto your DEVICE such Security Updates that a Secure Content Owner has requested that SOFTWARE SUPPLIERS distribute. SAGEM and SOFTWARE SUPPLIERS will not retrieve any personally identifiable information, or any other information, from your DEVICE by downloading such Security Updates.

DESCRIPTION OF OTHER RIGHTS AND LIMITATIONS

COPYRIGHT. All title and intellectual property rights in and to the SOFTWARE (including but not limited to any images, photographs, animations, video, audio, music, text and "applets," incorporated into the SOFTWARE), the accompanying printed materials, and any copies of the SOFTWARE, are owned by SAGEM or the SOFTWARE SUPPLIERS. You may not copy the printed materials accompanying the SOFTWARE. All title and intellectual property rights in and to the content which may be accessed through use of the SOFTWARE is the property of the respective content owner and may be protected by applicable copyright or other intellectual property laws and treaties. This EULA grants you no rights to use such content. All rights not specifically granted under this EULA are reserved by SAGEM and the SOFTWARE SUPPLIERS

Limitations on Reverse Engineering, Decompilation and Disassembly. You may not reverse engineer, decompile, or disassemble the SOFTWARE, except and only to the extent that such activity is expressly permitted by applicable law notwithstanding this limitation.

Single DEVICE. The DEVICE Software is licensed with the DEVICE as a single integrated product. The DEVICE Software installed in the memory of the DEVICE may only be used as part of the DEVICE.

Single EULA. The package for the DEVICE may contain multiple versions of this EULA, such as multiple translations and/or multiple media versions (e.g., in the user documentation and in the software). Even if you receive multiple versions of the EULA, you are licensed to use only one (1) copy of the DEVICE Software.

Software Transfer. You may not permanently transfer any of your rights under this EULA with regard to the DEVICE Software or Companion CD, except as permitted by the applicable Mobile Operator. In the event that the Mobile Operator permits such transfer, you may permanently transfer all of your rights under this EULA only as part of a sale or transfer of the DEVICE, provided you retain no copies, you transfer all of the SOFTWARE (including all component parts, the media and printed materials, any upgrades , this EULA and, if applicable, the Certificate(s) of Authenticity), and the recipient agrees to the terms of this EULA. If the SOFTWARE is an upgrade, any transfer must include all prior versions of the SOFTWARE.

Software Rental. You may not rent or lease the SOFTWARE.

Speech/Handwriting Recognition. If the SOFTWARE includes speech and/or handwriting recognition component(s), you should understand that speech and handwriting recognition are inherently statistical processes; that recognition errors are inherent in the processes; and that errors can occur in the component's recognition of your handwriting or speech, and the final conversion into text. Neither SAGEM nor its suppliers shall be liable for any damages arising out of errors in the speech and handwriting recognition processes.

NOTICE REGARDING THE MPEG-4 VISUAL STANDARD. The SOFTWARE may include MPEG-4 visual decoding technology. MPEG LA, L.L.C. requires the following notice:

USE OF THIS SOFTWARE IN ANY MANNER THAT COMPLIES WITH THE MPEG-4 VISUAL STANDARD IS PROHIBITED, EXCEPT FOR USE DIRECTLY RELATED TO (A) DATA OR INFORMATION (i) GENERATED BY AND OBTAINED WITHOUT CHARGE FROM A CONSUMER NOT THEREBY ENGAGED IN A BUSINESS ENTERPRISE, AND (ii) FOR PERSONAL USE ONLY; AND (B) OTHER USES SPECIFICALLY AND SEPARATELY LICENSED BY MPEG LA, L.L.C.

If you have questions regarding this Notice, please contact MPEG LA, L.L.C., 250 Steele Street, Suite 300, Denver, Colorado 80206; Telephone 303 331.1880; FAX 303 331.1879

Termination. Without prejudice to any other rights, SAGEM may terminate this EULA if you fail to comply with the terms and conditions of this EULA. In such event, you must destroy all copies of the SOFTWARE and all of its component parts.

Consent to Use of Data. You agree that SOFTWARE SUPPLIERS may collect and use technical information gathered in any manner as part of product support services related to the SOFTWARE. SOFTWARE SUPPLIERS may use this information solely to improve their products or to provide customised services or technologies to you. SOFTWARE SUPPLIERS may disclose this information to others, but not in a form that personally identifies you.

Internet Gaming/Update Features. If the SOFTWARE provides, and you choose to utilise, the Internet gaming or update features within the SOFTWARE, it is necessary to use certain computer system, hardware, and software information to implement the features. By using these features, you explicitly authorise SOFTWARE SUPPLIERS to use this information solely to improve their products or to provide customised services or technologies to you. SOFTWARE SUPPLIERS may disclose this information to others, but not in a form that personally identifies you.

Internet-Based Services Components. The SOFTWARE may contain components that enable and facilitate the use of certain Internet-based services. You acknowledge and agree that SOFTWARE SUPPLIERS may automatically check the version of the SOFTWARE and/or its components that you are utilising and may provide upgrades or supplements to the SOFTWARE that may be automatically downloaded to your Device.

Links to Third Party Sites. The SOFTWARE may provide you with the ability to link to third party sites through the use of the SOFTWARE. The third party sites are not under the control of SAGEM. Neither SAGEM nor its affiliates are responsible for (i) the contents of any third party sites, any links contained in third party sites, or any changes or updates to third party sites, or (ii) webcasting or any other form of transmission received from any third party sites. If the SOFTWARE provides links to third party sites, those links are provided to you only as a convenience, and the inclusion of any link does not imply an endorsement of the third party site by SAGEM or its affiliates.

Additional Software/Services. The SOFTWARE may permit SAGEM to provide or make available to you SOFTWARE updates, supplements, add-on components, or Internet-based services components of the SOFTWARE after the date you obtain your initial copy of the SOFTWARE ("Supplemental Components").

If SAGEM provides or makes available to you Supplemental Components and no other EULA terms are provided along with the Supplemental Components, then the terms of this EULA shall apply.

SAGEM reserves the right to discontinue any Internet-based services provided to you or made available to you through the use of the SOFTWARE.

EXPORT RESTRICTIONS. You acknowledge that SOFTWARE is subject to U.S. export jurisdiction. You agree to comply with all applicable international and national laws that apply to the SOFTWARE, including the U.S. Export Administration Regulations, as well as end-user, end-use and destination restrictions issued by U.S. and other governments.

UPGRADES AND RECOVERY MEDIA

- **DEVICE Software**. If the DEVICE Software is provided by SAGEM separate from the DEVICE on media such as a ROM chip, CD ROM disk(s) or via web download or other means, and is labelled "For Upgrade Purposes Only", you may install one copy of such DEVICE Software onto the DEVICE as a replacement copy for the existing DEVICE Software and use it in accordance with this EULA, including any additional EULA terms accompanying the upgrade DEVICE Software.
- **COMPANION CD**. If any Companion CD component(s) is provided by SAGEM separate from the DEVICE on CD ROM disk(s) or via web download or other means, and labelled "For Upgrade Purposes Only" , you may (i) install and use one copy of such component(s) on the computer(s) you use to exchange data with the DEVICE as a replacement copy for the existing Companion CD component(s).

RESPONSIBILITIES

SUPPORT AND INFORMATION Should you have any questions concerning this EULA, or if you desire to contact SAGEM]for any other reason, please refer to the address provided in the documentation for the DEVICE.

NO LIABILITY FOR CERTAIN DAMAGES. EXCEPT AS PROHIBITED BY LAW, SAGEM SHALL HAVE NO LIABILITY FOR ANY INDIRECT, SPECIAL, CONSEQUENTIAL OR INCIDENTAL DAMAGES ARISING FROM OR IN CONNECTION WITH THE USE OR PERFORMANCE OF THE SOFTWARE. THIS LIMITATION SHALL APPLY EVEN IF ANY REMEDY FAILS OF ITS ESSENTIAL PURPOSE.

FOR APPLICABLE LIMITED WARRANTIES AND SPECIAL PROVISIONS PERTAINING TO YOUR PARTICULAR JURISDICTION, PLEASE REFER TO YOUR WARRANTY BOOKLET INCLUDED WITH THIS PACKAGE OR PROVIDED WITH THE SOFTWARE PRINTED MATERIALS.

Java™

You are the owner of a SAGEM mobile phone that gives you the ability to download applications and games to be executed on your phone thanks to the built-in Java™ engine.

However, receiving applications from everywhere implies some basic knowledge of the possible effects of such download.

Thank you for spending a few minutes reading these pages: this will prevent you from doing something that may cause you unexpected consequences.

WARNING: *When running a Java™ application, you may be prompted to grant access to protected features. These features are protected because using them could incur you cost, or involve your personal data. Read the security popup message carefully, to understand what feature is requested, and decide whether it is legitimate for the application to perform it. In case of doubt, don't hesitate to refuse access by selecting the "No" button! The security configuration menu is an expert feature! You must know exactly what you are doing before attempting to change security parameters of a MIDlet. Misunderstanding changes may render MIDlet non functional and/or lead to higher risks for your private data or impact your airtime consumption. Any changes in the security configuration are done under your responsibility. In no case shall Sagem Communication and/or your network provider be liable for any damages deriving from or arising out of such changes in the security configuration.*

You must be aware that applications downloaded to your phone could cause the phone to perform actions for which you will be billed, like making calls and sending SMS. Depending on your operator's billing policy, you may also be charged to download the application because of airtime consumption.

Security considerations

Java™ MIDP technology is an efficient way to provide powerful applications in mobile phones. It allows use, by "over the air" downloaded applications or games, of the great features built-in in a mobile phone (SMS sending and receiving, multimedia playback and recording, network access…).

All these MIDP 2.0 features cannot be simply exposed to any MIDlet installed in the handset: a careful access control system is implemented in the device to protect your private data and airtime consumption.

Access controls are gathered in 9 security groups:

- Network access (GPRS/GSM data airtime consumption, HTTP/web connections…)
- Auto invocation (MIDlet can wake up at a given time or when receiving a SMS)
- Phone call (ability to initiate a phone call)
- Local connectivity (IrDA or serial interfaces use by the MIDlet)

- Messaging receive (SMS,SMS-CB interception by a MIDlet)
- Messaging sending (SMS sending by a MIDlet)
- Read User data (Subscriber identity, Phonebook, Agenda read access from a MIDlet)
- Write User data (New phonebook or agenda entry)
- Multimedia recording (ability to control camera or microphone from a MIDlet)

According to the security status of an installed MIDlet (see below), each of these security groups has one among 5 possible authorizations levels (listed from the more restrictive to the more permissive):

- Never
  The security group completely prevents access to the protected features.
- Per use
  Each time MIDlet tries to use protected feature, user is prompted to grant access.
- Per session
  First time a MIDlet uses a protected function, user is prompted to grant access like in "Per use" authorization but access is granted until the MIDlet terminates.
- Single confirmation
  The first time in the whole MIDlet life a MIDlet uses a protected feature, user is prompted to grant access. It remains valid until the MIDlet is removed from the handset.
- Always
  The security group unconditionally grants access to protected features.

A MIDlet has a security status which is either "uncertified", or else "certified".

An "uncertified" status means that the source of the MIDlet could not be verified by the mobile phone at installation time. As far as the phone knows, the MIDlet could have been written by anyone.

A "certified" status means that the MIDlet was digitally signed by a known party, whose name is displayed by the mobile phone. This means that the mobile phone successfully authenticated the named party as the source of the MIDlet.

Security permissions are different for "uncertified" or "certified" MIDlets, and may be different for different sorts of named parties. Usually "uncertified" security permisions are more restrictive than "certified" ones.

Security configuration menu

When a MIDlet is installed in the mobile phone, default security authorizations are applied.

This default security configuration may be altered through the "Settings/Security" menu of an installed MIDlet.

Once in the "Security" menu, the security status of the MIDlet is displayed (see "Security considerations" paragraph above).

If you do not want to enter the security menu, simply select "Back" button.

You can proceed by selecting **OK** button.

The menu displayed allows you to increase or decrease permissions currently applied to the current MIDlet for each of the security groups.

When you set a more permissive authorization to a security group than the current value, mobile phone asks you to confirm your increased risk exposure.

The maximum risk exposure increase is limited by the security status. Depending of the manufacturing configuration, it means, for example, that "Net Access" security group authorization cannot be set to a permissive value higher that "Session" for an "uncertified" MIDlet ("Single confirmation" and "Always" are unavailable in the security configuration menu) but an operator "certified" MIDlet may have all permission values available without any limitations.

What is Java™?

Java™ is a new technology enabling use of powerful applications in the mobile phone area. Business applications and games are easily downloadable by the end-user on a Java™ featured handset.

Your mobile phone is a MIDP 2.0 compliant Java™ platform which implements WMA (SMS support) and MMAPI (Multimedia support) options, providing an exciting environment to run highly graphical, networked and intuitive MIDP applications.

Such applications may be, for example, a wide range of games and appealing applications like action and logic games, agenda, e-Mail reader, Web browser…

What is a MIDlet?

A Java™ application or a game designed to run in a mobile phone is named a MIDlet (MIDP applet).

A MIDlet is usually made of 2 files:

- The JAD file
- The JAR file

JAD file stands for **J**ava™ **A**pplication **D**escriptor. It is a small file describing the content of a JAR file (version, vendor name, size…) and displayed by the mobile phone. **JAD file size is usually less than 2 kilo-bytes large.**

JAR file stands for Java™ Archive. It refers to the application data themselves (program, images, sound). **A JAR file may be up to 200 kilo-bytes large.**

Note: In rare circumstances, MIDlet vendors may provide no JAD file and the MIDlet is the JAR file alone. In such a case it is your only responsibility to evaluate the risk to download the JAR file without possibility of consulting the JAD file.

Downloading a MIDlet (Java™ game or application)

MIDlets are easily downloaded in the mobile phone through the Games or Applications menus or through the WAP browser.

In almost all cases, you will first receive a JAD file which will be displayed on the screen.

Much care must be given in examining the content of the file as explained further.

When you select a JAD file, your mobile phone downloads it, displays data contained and prompts you to acknowledge the JAR file download.

The popup displays information below:

- Name of the MIDlet
- Version
- Size (JAR file size)
- Vendor name
- Security status (**IMPORTANT:** see "Security considerations" paragraph below)
- JAR file URL.

If you do not want to download the main data (JAR file), you shall refuse to acknowledge further airtime consumption by selecting "Cancel" (JAR file is not downloaded).

If you agree on the MIDlet installation, just select **OK**. The MIDlet is installed with security levels set to default values associated with its security status.

Before downloading an application, such a message may appear: "Your handset cannot identify the application, please be sure of the source of the application before installing the application".

You shall read carefully the next two paragraphs to fully understand Java™ MIDP security concerns.

Trademarks

Java™ and all other Java-based marks are trademarks or registered trademarks of Sun Microsystems, Inc. in the U.S. and other countries.

Disclaimer

As explained above, some downloaded items may contain data or may induce actions which may cause malfunctioning of your mobile phone or loss or corruption of data or abnormal increase of your airtime consumption.

YOU EXPRESSLY ACKNOWLEDGE THAT THE DOWNLOAD OF ANY APPLICATIONS INCLUDING JAVA APPLICATIONS OR GAMES IS DONE UNDER YOUR EXCLUSIVE RESPONSIBILITY. IN NO EVENT SHALL SAGEM COMMUNICATION, YOUR NETWORK SERVICE PROVIDER OR THEIR AFFILIATES BE LIABLE FOR ANY LOST PROFITS OR COSTS OF PROCUREMENT OF SUBSTITUTE GOODS OR SERVICES, LOSS OF PROFITS, INTERRUPTION OF BUSINESS, LOSS OF DATA OR FOR ANY SPECIAL, INDIRECT, INCIDENTAL, ECONOMIC, OR CONSEQUENTIAL DAMAGES ARISING UNDER CONTRACT, TORT, NEGLIGENCE, OR OTHER THEORY OF LIABILITY RELATING TO THE DOWNLOAD OF ANY APPLICATION BY ANY MEANS, INCLUDING JAVA APPLICATIONS OR GAMES IN SAGEM COMMUNICATION DEVICES. YOU EXPRESSLY ACKNOWLEDGE THAT ANY APPLICATIONS INCLUDING JAVA APPLICATIONS OR GAMES ARE PROVIDED STRICTLY "AS IS". SAGEM COMMUNICATION AND/OR YOUR NETWORK SERVICE PROVIDER EXTEND NO WARRANTY WHATSOEVER THERETO. SAGEM COMMUNICATION AND/OR YOUR NETWORK SERVICE PROVIDER DISCLAIM ANY EXPRESS, IMPLIED OR STATUTORY WARRANTY OF MERCHANTABILITY, FITNESS OF ANY APPLICATIONS INCLUDING JAVA APPLICATIONS OR GAMES FOR A SPECIFIC PURPOSE, SATISFACTORY QUALITY, SECURITY OR OTHERWISE.

Troubleshooting

Problem - Situation	Actions
It is impossible to switch the phone on	Remove and replace the battery. If you still cannot switch the phone on, charge the battery: - Put it on charge for at least 15 minutes before switching it back on again. - Check if the battery icon is scrolling up and down. - If so, the phone is charging. - If not, please take the charger out and put it back on again. Please check that the charging icon is scrolling up and down. - If you still cannot switch the phone on, please disconnect the charger, put it back on again and please repeat that manipulation several times. - If the charging icon is still not scrolling up and down, please contact your after-sales services. - When the charging icon has stopped scrolling up and down, the battery is charged.
Battery status unknown	The phone does not recognize the battery. Please check the position of the battery.
LOW BATTERY	This message is displayed when the battery becomes too weak. The phone switches itself off automatically. Put the phone on charge.
SIM not present	Check if the SIM card is present and properly positioned / inserted. Check the condition of the SIM card. If damaged, please go back to the network shop for advice. Contact your after-sales service if the message persists.
Incorrect PIN code	An incorrect PIN code has been entered. Be careful! Three incorrect PIN codes will block the SIM Card.
SIM BLOCKED	If a wrong PIN number is entered three times in succession, your SIM card is blocked. You must then: - Enter the PUK (Personal Unblocking Key) code provided by Vodafone, and validate. - Enter your PIN number and validate. - Enter your PIN number again and validate. After 5 or 10 failed attempts (depending on the type of SIM card), the SIM card is definitely locked. You must then contact your network provider to obtain a new card.

PROBLEM - SITUATION	ACTIONS
SIM LOCKED	In certain cases, the handset can only be used with some types of SIM cards. This message means that the SIM card you are using does not fit with the phone. Take the SIM card out, and switch it back on. If the message **SIM not present** appears on the screen, you will need to check its compatibility next to the place where you bought it. If not, please contact your after-sales service.
No call connection	Check that the number you have dialled is correct. If the icon is displayed without any network name displayed, only emergency services can be called. Check the status of your credit. Check that the SIM Card you are using offers the service you are requesting; check if its validity has not expired. Check and deactivate the outgoing calls restriction when necessary. The network could be saturated. Try later. If the problem persists, please contact your Technical Helpdesk.
No receiving calls	Try to make a call in order to check that the phone and the network are operational. Check and deactivate the permanent call forwarding (permanent call forwarding icon displayed on the screen). Check and deactivate the incoming calls restriction when necessary. If the problem persists, please contact your Technical Helpdesk.
Quality reception when calling	Avoid placing your fingers on the top of the phone, where the aerial is integrated: the phone will have to use full strength to establish a quality transmission.
No voicemail	Check that your subscription does offer this service. Program the call to be forwarded to voicemail using the information provided by Vodafone, see page 51. Check that the SIM card used offers this service. Try to make a call to check that phone and network are operational. Check if the voicemail number is properly configured. To do so, go to the **Settings**/**Calls** menu, select **Voicemail** and check the number. Otherwise, enter Vodafone voicemail number.
If voicemail icon flashing	Call voicemail and listen to the new messages to make it disappear.
Network provider name does not appear on screen	Go into the **Settings** menu, select **Networks**, then **Selection**. Wait until the network provider name appears, select it and validate.
How do I switch to silent mode?	Hold the # key down unless ring tone sounds, when a short touch is enough.

PROBLEM - SITUATION	ACTIONS
How do I delete the envelop icon that appears on the screen?	The icon means you have received text messages. To delete it, read your message. If the icon flashes, memory is full, you must delete messages.
How do I delete the voicemail icon that appears on the screen?	This voicemail means that you have received a voice message: please call your voicemail and listen to it. Please follow the instructions given.
How do I remove the written message in the idle screen (1 call)?	Press the key to go back to the idle screen without messages.
How do I free up memory to download my objects	Go into the **My Files** menu and delete some objects.
How do I free up memory to receive new messages?	Manage your Outbox carefully. It is recommended not saving sent messages automatically: too many messages saved will quickly fill up the available memory and no further messages will be received. To delete them, please go into the **Messaging** menu, select **Outbox** then delete some messages. Manage your **Inbox** carefully also.
How do I free up memory to store new contacts in my Phonebook?	It is highly recommended to manage your Phonebook carefully. If you have received pictures enclosed in a Vcard, please save or delete them.
How can I increase the efficiency of my phone?	The most efficient actions are as follows: Please keep your phone safely in order to avoid pressing the keys unnecessarily: every time a key is pressed the screen lights up. You can deactivate the screensaver or select the activation time to be more than every 300 s (the screensaver uses processing power). Make sure that you don't obstruct the antenna with your fingers when using the phone (see page 22).

FDA consumer information on wireless phones

FDA consumer information on wireless phones

The US Food and Drug Administration (FDA) provides consumer information on wireless phones at:http://www.fda.gov/cellphones/qa.html.

Following are safety related questions and answers discussed at this web site:

Do wireless phones pose a health hazard?

The available scientific evidence does not show that any health problems are associated with using wireless phones. There is no proof, however, that wireless phones are absolutely safe. Wireless phones emit low levels of radiofrequency energy (RF) in the microwave range while being used. They also emit very low levels of RF when in the stand-by mode. Whereas high levels of RF can produce health effects (by heating tissue), exposure to low level RF that does not produce heating effects causes no known adverse health effects. Many studies of low level RF exposures have not found any biological effects. Some studies have suggested that some biological effects may occur, but such findings have not been confirmed by additional research. In some cases, other researchers have had difficulty in reproducing those studies, or in determining the reasons for inconsistent results.

What is FDA's role concerning the safety of wireless phones?

Under the law, FDA does not review the safety of radiation-emitting consumer products such as wireless phones before they can be sold, as it does with new drugs or medical devices. However, the agency has authority to take action if wireless phones are shown to emit radiofrequency energy (RF) at a level that is hazardous to the user. In such a case, FDA could require the manufacturers of wireless phones to notify users of the health hazard and to repair, replace or recall the phones so that the hazard no longer exists.

Although the existing scientific data do not justify FDA regulatory actions, FDA has urged the wireless phone industry to take a number of steps, including the following:

- Support needed research into possible biological effects of RF of the type emitted by wireless phones;
- Design wireless phones in a way that minimizes any RF exposure to the user that is not necessary for device function; and
- Cooperate in providing users of wireless phones with the best possible information on possible effects of wireless phone use on human health.

FDA belongs to an interagency working group of the federal agencies that have responsibility for different aspects of RF safety to ensure coordinated efforts at the federal level. The following agencies belong to this working group:

- National Institute for Occupational Safety and Health
- Environmental Protection Agency
- Federal Communications Commission
- Occupational Safety and Health Administration
- National Telecommunications and Information Administration

The National Institutes of Health participates in some interagency working group activities, as well.

FDA shares regulatory responsibilities for wireless phones with the Federal Communications Commission (FCC). All phones that are sold in the United States must comply with FCC safety guidelines that limit RF exposure. FCC relies on FDA and other health agencies for safety questions about wireless phones.

FCC also regulates the base stations that the wireless phone networks rely upon. While these base stations operate at higher power than do the wireless phones themselves, the RF exposures that people get from these base stations are typically thousands of times lower than those they can get from wireless phones. Base stations are thus not the primary subject of the safety questions discussed in this document.

What is FDA doing to find out more about the possible health effects of wireless phone RF?

FDA is working with the U.S. National Toxicology Program and with groups of investigators around the world to ensure that high priority animal studies are conducted to address important questions about the effects of exposure to radiofrequency energy (RF).

FDA has been a leading participant in the World Health Organization International Electromagnetic Fields (EMF) Project since its inception in 1996. An influential result of this work has been the development of a detailed agenda of research needs that has driven the establishment of new research programs around the world. The Project has also helped develop a series of public information documents on EMF issues.

FDA and the Cellular Telecommunications & Internet Association (CTIA) have a formal Cooperative Research and Development Agreement (CRADA) to do research on wireless phone safety. FDA provides the scientific oversight, obtaining input from experts in government, industry, and academic organizations. CTIA-funded research is conducted through contracts to independent investigators. The initial research will include both laboratory studies and studies of wireless phone users. The CRADA will also include a broad assessment of additional research needs in the context of the latest research developments around the world.

What steps can I take to reduce my exposure to radiofrequency energy from my wireless phone?

If there is a risk from these products--and at this point we do not know that there is--it is probably very small. But if you are concerned about avoiding even potential risks, you can take a few simple steps to minimize your exposure to radiofrequency energy (RF). Since time is a key factor in how much exposure a person receives, reducing the amount of time spent using a wireless phone will reduce RF exposure.

If you must conduct extended conversations by wireless phone every day, you could place more distance between your body and the source of the RF, since the exposure level drops off dramatically with distance. For example, you could use a headset and carry the wireless phone away from your body or use a wireless phone connected to a remote antenna.

Again, the scientific data **do not** demonstrate that wireless phones are harmful. But if you are concerned about the RF exposure from these products, you can use measures like those described above to reduce your RF exposure from wireless phone use.

What about children using wireless phones?

The scientific evidence does not show a danger to users of wireless phones, including children and teenagers. If you want to take steps to lower exposure to radiofrequency energy (RF), the measures described above would apply to children and teenagers using wireless phones. Reducing the time of wireless phone use and increasing the distance between the user and the RF source will reduce RF exposure.

Some groups sponsored by other national governments have advised that children be discouraged from using wireless phones at all.

Do hands-free kits for wireless phones reduce risks from exposure to RF emissions?

Since there are no known risks from exposure to RF emissions from wireless phones, there is no reason to believe that handsfree kits reduce risks. Hands-free kits can be used with wireless phones for convenience and comfort. These systems reduce the absorption of RF energy in the head because the phone, which is the source of the RF emissions, will not be placed against the head. On the other hand, if the phone is mounted against the waist or other part of the body during use, then that part of the body will absorb more RF energy. Wireless phones marketed in the U.S. are required to meet safety requirements regardless of whether they are used against the head or against the body. Either configuration should result in compliance with the safety limit.

Do wireless phone accessories that claim to shield the head from RF radiation work?

Since there are no known risks from exposure to RF emissions from wireless phones, there is no reason to believe that accessories that claim to shield the head from those emissions reduce risks. Some products that claim to shield the user from RF absorption use special phone cases, while others involve nothing more than a metallic accessory attached to the phone.

Studies have shown that these products generally do not work as advertised. Unlike "hand-free" kits, these so-called "shields" may interfere with proper operation of the phone. The phone may be forced to boost its power to compensate, leading to an increase in RF absorption.

Driving safety tips

Wireless phones give people the ability to communicate almost anywhere, anytime. But an important responsibility accompanies those benefits, one that every wireless phone user must uphold. When driving a car, driving is your first responsibility.

Below are safety tips to follow while driving and using a wireless phone that should be easy to remember.

Get to know your wireless phone and its features such as speed dial and redial.

When available, use a hands free device.

Position your wireless phone within easy reach and where you can grab it without removing your eyes from the road. If you get an incoming call at an inconvenient time, if possible, let your voice mail answer it for you.

Let the person you are speaking with know you are driving; if necessary, suspend the call in heavy traffic or hazardous weather conditions.

Do not take notes or look up phone numbers while driving.

Dial sensibly and assess the traffic; if possible, place calls when you are not moving or before pulling into traffic. Try to plan your calls before you begin your trip. But if you need to dial while driving, follow this simple tip--dial only a few numbers, check the road and your mirrors, then continue.

Do not engage in stressful or emotional conversations that may be distracting.

Use your wireless phone to call for help. Dial 9-1-1 or other local emergency number in the case of fire, traffic accident, road hazard or medical emergency.

Use your wireless phone to help others in emergencies. If you see an auto accident, crime in progress or other serious emergency where lives are in danger, call 9-1-1 or other local emergency number.

Call roadside assistance or a special wireless non-emergency assistance number when necessary. If you see a broken-down vehicle posing no serious hazard, a broken traffic signal, a minor traffic accident where no one appears injured or a vehicle you know to be stolen, call roadside assistance or other special non-emergency wireless number.

Index

A

Accessories 12
Activating your phone 17
Alarm 41
Anonymous mode 50
Applications 40
Automatic redial 51

B

Battery
- Charging the battery 23
- Installing the battery 18

Beep 46
Blacklist 51
Bluetooth 26, 35, 37, 38, 43, 44
Browser 54

C

Calculator 42
Calendar 41
Call barring 53
Call divert 50
Call waiting 51
Calls 20, 50
Camera 35, 54
Car kit 49
Charger 12
Confidentiality 53
Connectivity 48
Contact 36, 37, 38
Contacts 19, 48
- Call 26
- Copy 26
- Delete 26
- Edit 26
- Group 27
- New contact 24
- Send message 26
- Using the phonebook 24

Contacts menu 24
Contrast 48
Cost 54
Counters 50
Currencies 42

D

Date and time 20
Display 47
Display numbers 50

F

Fixed dialling 53

G

Games 40
Getting started 19

H

Hands-free mode 21
Headset 49

I

Icon 16
Infrared 48
Initial screen 16
Input modes 29
IrDA 26, 35, 37, 38, 43, 44, 49

K

Keypad locking 13

L

Languages 45

M

Mailbox 51
Master Reset 46
Media Player 54
Menus 11
Messages
- Creating message 28
- Drafts 31
- Groups 34
- Inbox 31
- Local information 34
- Memory 34
- Outbox 32
- Receiving messages 31
- Saving message 30
- Sending message 30
- Sent Messages 32
- Settings 33
- Templates 33
- Voicemail 33

Messenger 32
MMS 37
Music Player 44

N

Navigation principles 15
Networks 20, 51

O

Operator 53
Operator logo 47
Organiser 48

P

Phone code 52
Phone settings 45
Photo 35, 48, 54
Pictures 37, 48
PIN number 52
PIN2 number 52

R

Ringtone 45

S

Screensaver 47
Security 52
Serial cable 48
Serial Speed 49
Shortcuts 47
Silent mode 45
SIM card 17, 18
Sound 48
Sounds 38
Speed Dialing 25
Synchronize 50

T

T9 29
Time and Date 46
Timer 41
Todo 43, 48
Troubleshooting 67, 68, 69

U

USB cable 48
USB mode 50

V

Vibrate 45
Video 48, 54
Videos 36, 38

W

Wallpaper 47
Warranty 56
Wellphone 49

Y

Your phone package 12

2526241 28

Sagem Communication
SAFRAN Group

Mobile Communication Business Group

www.sagem.com/mobiles
Le Ponant de Paris - 27, rue Leblanc - 75512 PARIS CEDEX 15 - FRANCE
Société Anonyme
Capital 300 272 000 € - 480 108 158 RCS PARIS

03/2006