my500X
my501X

ENGLISH

SAGEM

You have just purchased a SAGEM phone. We congratulate you! In order to use your phone efficiently and safely, we recommend that you read this handbook carefully.

Your phone can be used internationally in the various networks (GSM 900 MHz, DCS 1800 MHz or PCS 1900 MHz) depending on the roaming arrangements with your operator.

Some services described in this guide may not be available from the network or when roaming, or may require a specific subscription.

Remember to back up your data and programs frequently, and before sending the mobile phone for repair.

This phone, like any other wireless phone, operates using radio signals and networks. Connection in all locations and conditions cannot be guaranteed. Therefore you should never rely solely on any wireless phone for essential communications (for example, medical emergencies).

In some jurisdictions it may be unlawful to take a picture without notice to or the consent of all participants.

WARNING

Depending on the model, network configuration and associated subscription cards, certain functions may not be available.

Ensure that your SIM card is a 3 V SIM type that is compatible with your phone. Inserting an incompatible card will be indicated by a message when your phone is switched on. Contact your operator.

Your phone is identified by its IMEI number. Write this number down, and do not keep it with your phone, because you may be asked for it in the event of your phone being stolen, in order to prevent it from being used, even with a different SIM card. In order to display the IMEI on your phone's screen, type: *#06#.

SAGEM™ is a trademark of Sagem Communication SAFRAN Group.
T9™ Text Input is a trademark of ©Tegic Communications Inc.
Java™ and all Java™ based trademarks and logos are trademarks or registered trademarks of Sun Microsystems, Inc. in the U.S. and other countries.
The WAP navigator and some message softwares (i-mode) are under licence Openwave.
The WAP navigator and the softwares included are the exclusive property of Openwave. For this reason, it is forbidden to modify, translate, disassemble or even decompile all or part of these softwares.
The Bluetooth word mark and logos are owned by the Bluetooth SIG, Inc.
microSD™ is a trade mark of SD Card Association.

Contents

Description 6
Installing the SIM card and the battery 8
Inserting the memory card 9
Idle screen 10
Quick start 11
Information on the SIM card 11
Getting started 11
Switching ON/OFF 12
Network 12
First call 13
Receiving a call 13
Using your phone 14
Improving antenna performance 14
Increase the battery life of your phone 14
Charging the battery 15
Phonebook 16
Using the phonebook 16
Storing a new contact 16
Calling a contact 16
Contact options 17
Mailing lists 18
Messages 19
Compose SMS 19
Saving the message 20
Sending the message 20
Receiving messages 21
Messages menu 21
Camera 24
Taking and saving a photo 24
Video 26
Taking a video 26
Multimedia 27
Music Player 28
Creating a playlist 28
Playing your music 28
WAP 29
The WAP Menu 29
WAP Logging on 29
Downloading objects 29
WAP Logging off 30
GPRS 30
Games 31
Applications 32
Applications 32
Alarm 32
Timer 32
Calculator 32
ToDo 33
Services 33
Calendar 34
Calendar menu 34
Settings 35
Phone settings 35
Display 36
Calls 38
Networks 40
Security 40
Player settings 42
Browser settings 42

Camera 42
Video settings 43
Shortcuts.....43
Reset settings 43
Storage 43
Keys checking.....43
Help.....43
Connectivity..... 44
Bluetooth (my501X model) 44
Serial speed 44
Car kit or headset.....45
USB mode.....45
SyncML 45
Technical features..... 46
Certification and safety information for the United States and countries using FCC standards 47
FCC Part 15 statement 47
FCC SAR information 48
Safety Information.....49
Distance of operation 50
FDA consumer information on wireless phones 50
Driving safety tips.....53
Certification and safety information for Europe and countries using CE standards 54
CE conformance statement 54
Safety information 56
CE Environment.....57
For Customers in the United States 58
Limited Warranty.....59
For customers outside the United States 62
Warranty 62
End User Licence Agreement (EULA), for the software 65
Java™ 69
Troubleshooting 74
Index 76

Description

Red key: Hold down: Switch on/off. *In a call context:* Reject a call - hang up
In menus: Return to idle screen

Green key: Long press: Activate/Deactivate hands-free mode : press again this key to switch into hands-free mode (**WARNING:** do not use the phone in hands-free mode near to your ear, or you may suffer hearing loss (at least 3.9 inches (10 cm)) - *In call context:* Call - receiving a call

Right programmable key:
In idle screen: Access to certain functions (shortcuts)
In menus: Access to the selection shown on screen in the tab (*)

Left programmable key:
In idle screen: Access to certain functions (shortcuts)
In menus: Access to the selection shown on screen in the tab (*)

The navigator allows you:
- to navigate in the various functions pressing the relevant part (up, down, right, left)
- to confirm your selection pressing the central part (**OK**)

In idle screen, pressing the navigator displays the main menus icons.
Pressing the navigator followed by one of the twelve keys of the keypad, you can display a menu directly.

*****

When composing a message:
Short press: switches from one input mode to another (upper case/lower case, 123 mode) - Long press: activate/deactivate T9 mode

#

Hold down: *In idle screen:* Silent mode. *In call reception mode:* Short press stops ring tone. *In ring tone setting mode:* Activate/deactivate ring tone
Stops sound in video or message playing, or in a game

2 to 9

A long press on the keys **2** to **9** directly displays the phonebook

*(*) In this manual, when a function is chosen by pressing on this key, square brackets are used (e.g.: [**Save**]).*

Side keys

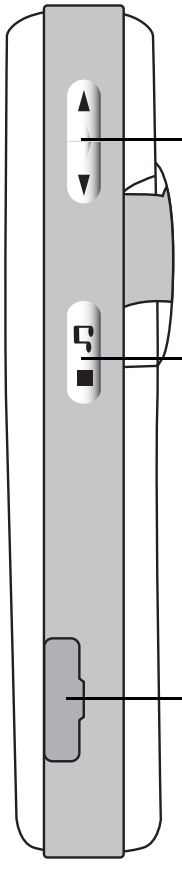

Volume setting (calling or playing music)
Incoming call: a short press on ▼ stops the ring tone without refusing or answering the call.
A long press on ▼ refuses the call.

Long press: access to Music player
A short press allows you to play or pause music
A long press returns to the idle screen

miniSD™ card slot

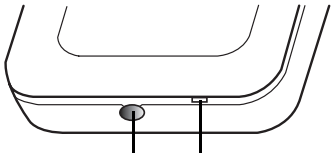

Microphone

Stereo headset connector

Installing the SIM card and the battery

WARNING

Depending on the model, network configuration and associated subscription cards, certain functions may not be available.

Ensure that your SIM card is a 3 V SIM type that is compatible with your phone. Inserting an incompatible card will be indicated by a message when your phone is switched on. Contact your operator.

Your phone is identified by its IMEI number. Write this number down, and do not keep it with your phone, because you may be asked for it in the event of your phone being stolen, in order to prevent it from being used, even with a different SIM card. In order to display the IMEI on your phone's screen, type: *#06#.

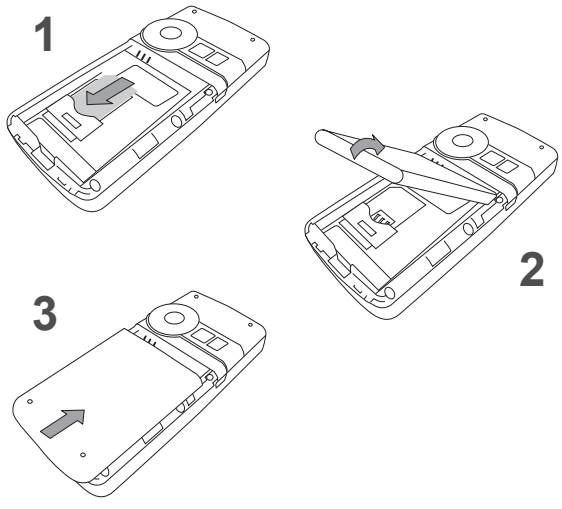

The SIM card is inserted under the phone's battery. Ensure that the phone is switched off and the charger disconnected.

1. Slide the SIM card, with cut corner as shown on the phone, into the card holder with fold face down.
2. Place the battery by positioning first the top of it, as shown on the battery.
3. Place the back cover, clicking in first the upper part then the lower part.

Inserting the memory card

- Open the protective cover of the slot located on the side of the phone and insert the memory card pushing it until it clicks into place.
- To remove the card, first make sure that no application is accessing the card, then slightly push the top edge of the card to release it and pull it out of the slot.

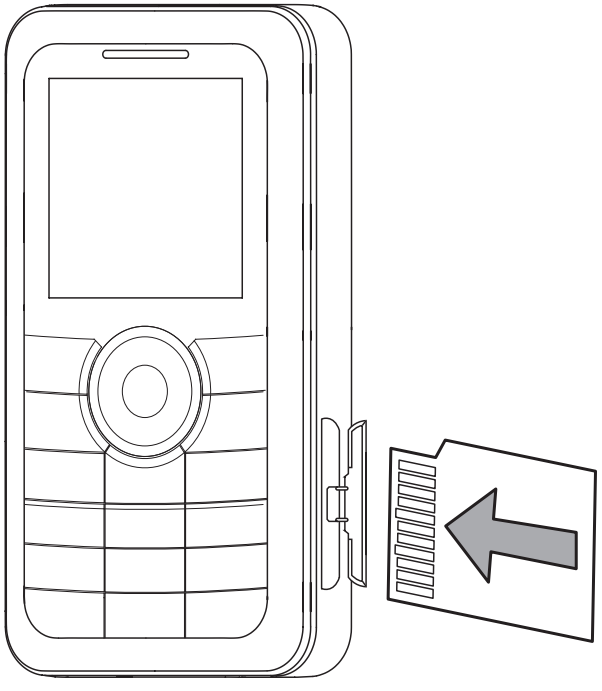

WARNING

The memory card is very fragile. Take care when you insert or remove the memory card.

The memory card may suffer damage if withdrawn during a read or write operation. Ensure that no application accesses the card during its withdrawal.

Some memory cards must be formatted with a PC before first use with the phone.

Idle screen

The idle screen may contain the following information:

1 - The title bar icons:

	Battery (if it flashes red, the battery must be charged immediately)
	Silent mode (the ringtone is off)
E	Only emergency call is possible
	Signal strength level (between 0 and 5 bars)
	Message received (read your message), flashing: memory full (delete some messages)
GPRS	Grey: GPRS unavailable Black: GPRS connection Flashing: GPRS connection on hand
	WAP connection

2 - Date and time, in digital or analog mode

3 - Network provider

4 - Thumbnail centred on bottom line:

The main « Menu » thumbnail shows that the menus can be accessed by pressing the navigator. The following information may also be displayed: « 1 message received » or « 1 call » (incoming call failed).

It can be deleted by pressing briefly.

Quick start

Information on the SIM card

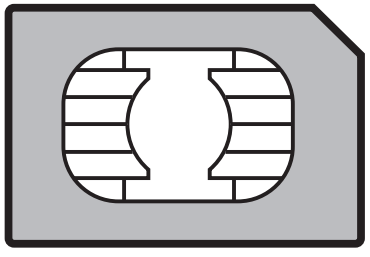

To use your phone, you need a card called SIM card. It contains personal information that you can modify:

Secret codes (PIN(s): Personal Identification Numbers), these codes allow you to protect access to your SIM card and phone

Phonebook

Messages

How special services work.

Your phone is compatible with the SIM 3V cards.

WARNING
This card must be handled and stored with care in order not to be damaged. If you should lose your SIM card, contact your network provider immediately.
Please keep your SIM card out of reach of young children.

Getting started

When you switch on your phone for the first time, follow instructions displayed on the screen.

If access to the SIM card is protected, the device prompts you to enter the PIN number:

Enter the code between 4 and 8 digits given to you when the SIM card was issued. These digits do not appear on the screen for security reasons.

After pressing [**OK**], the phone activates the SIM card settings and switches on again ; enter your PIN code again then the date and time, make your choice for the following settings: time zone, daylight savings, skin, wallpaper, screensaver, ring tone, volume, vibrate and voicemail number.

If there are contacts saved in your SIM card, you are invited, if you wish, to copy them in the phone contacts memory.

Warning
If a wrong PIN number is entered three times in succession, your SIM card is blocked. You must then:
- Enter the PUK (Personal Unblocking Key) code provided by your operator, and validate.
- Enter your PIN number and validate.
- Enter your PIN number again and validate.

After 5 or 10 failed attempts (depending on the type of SIM card), the SIM card is definitely locked. You must then contact your operator to obtain a new card.

Switching ON/OFF

When your phone is off, a short press on will turn it ON.
When the phone is ON, if your are browsing inside the menus, a short press on will come back to the idle screen. When you are in the idle screen, a long press on will switch OFF the phone.

Network

From now on the phone hunts for a network on which it can make calls. If it finds one, it displays the name of the network on the screen. You are then ready to send or receive a call.

If the network's name appears, calls are possible on your operator's network.
If the letter R and a network name are displayed, calls are possible on a roaming network provider.
If the letter E is displayed without any network name, only the emergency services are accessible (ambulance, police, fire brigade).
If the network icon flashes, the phone is in permanent search mode. There is no network available. The signal strength indicator received allows you to display the quality of reception. If it indicates less than three bars, search for better reception in order to call in good conditions.

First call

Dial the number you want to ring.
Press .
During the call, the call in progress icon flashes on screen and tones may indicate the establishment of the call.
While a call is connecting, the phone icon is flashing.
You can adjust the sound level (volume) using the navigator upwards or downwards.
At the end of the conversation press to hang up.

International call
Press 0 (hold down) to display « + », then dial the country code without waiting for the dial tone, then the number of the called party.

Emergency services
Depending on the network you can obtain the emergency service with or without SIM card or when the keypad is locked. It is enough to be in an area served by a network.
To obtain the international emergency service, dial **112** then press .

Receiving a call

When you receive a call, the number of your caller is displayed when it is presented by the network.
Press to answer, and speak.
To refuse the call, press .
To stop the ring tone or the vibrate, without refusing the call, press #.

Hands-free mode
To change to hands-free mode during a call, make a short press on the green key then press [**Yes**] to confirm activation of the amplified mode.
WARNING: in this mode do not bring the phone up to your ear.

All the numbers corresponding to incoming and outgoing calls are logged in the list of recent calls.
When on a call, pressing [**Options**] allows you to have access to different functions: switching to hands-free mode, switching to mute mode, displaying menus, displaying the phonebook.
Pressing [**Mute**] allows you to switch off the microphone temporarily when you want that your correspondent does not listen.

Using your phone

Improving antenna performance

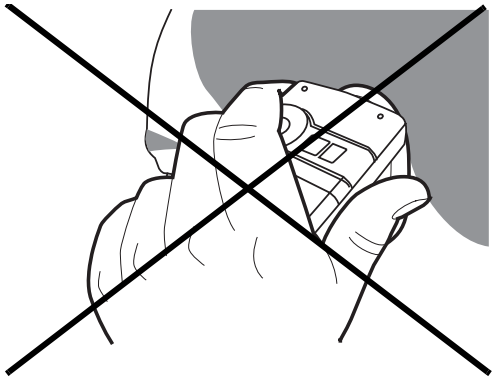

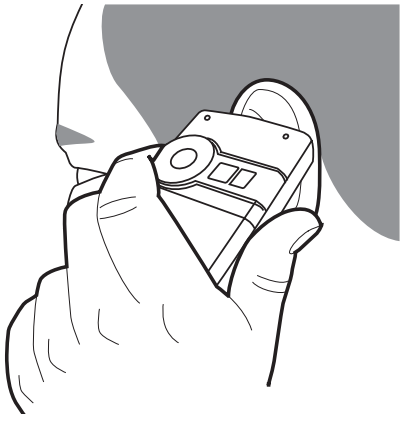

The antenna is integrated in your phone, under the back cover at the top.

Avoid putting your fingers on this area when the phone is switched ON.

If your fingers obstruct the antenna, the phone may have to operate with a higher power level than usual; decreasing its efficiency quickly. It could also affect the quality of your communications.

Increase the battery life of your phone

- Don't press the keys when not necessary: each keypress activates the backlight, and uses much power.
- Don't obstruct the antenna with your fingers.
- Activation Bluetooth function (my501X model) reduces the phone battery life. We advise you to deactivate it when not in use.

Charging the battery

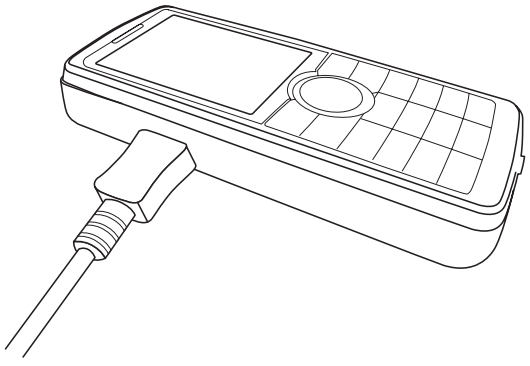

Your phone is powered by a rechargeable battery. A new battery must be charged for 4 hours at least before being used for the first time. It reaches its optimum capacity after a few cycles of use.

When your battery has been discharged, the empty battery icon flashes. In this case recharge your battery for at least 15 minutes before making any calls in order not to be cut off quickly.

To recharge the battery:

Connect the charger to a socket.
Plug the end of the cable into the side connector of the phone.
The phone is then charging up. The battery icon scrolls up and down to indicate that it is charging. When the battery is fully charged, the charging stops on its own. Disconnect the cable.
When charging, the battery may warm up, this is normal.

WARNING

There is danger of explosion if the battery is placed in an incorrectly way or if it is exposed to fire.
Do not short circuit it.
The battery does not have any part that you can change.
Do not try to open the battery casing.
Use only the appropriate chargers and batteries as shown in the phone manufacturer's catalogue.
The use of other types of chargers or batteries may be dangerous or invalidate the warranty.
Used batteries must be disposed of in the appropriate places.
We advise you to take the battery out if you plan not to use the phone for extended periods.
You are strongly advised not to connect your phone to the charger if it doesn’t contain a battery.
The charger is a safety step-down transformer, it is forbidden to modify, alter or replace it by another component (power supply plug, etc).
If the battery has entirely discharged, the phone cannot start. Plug the phone to the charger. The phone will switch on after a few minutes of charge. You can use the phone again when the Start option is displayed on the screen.

Phonebook

Using the phonebook

Enter the **Phonebook** menu, the contacts list is displayed if you already get some (otherwise, go to **Storing a new contact**). When a contact is selected, an icon is displayed in the title bar:

contact stored in the SIM card

contact stored in the phone

contact stored in the Fixed Dialling. See **PIN2 number** and **Fixed dialling** in **Security** Menu for more details about this activation.

You can search for a contact quiclky by typing the first letters (up to three). You can display it by pressing **OK**.

Storing a new contact

There are two options to store a contact :
1) select [**Options**], then select **Add phone contact** or **Add SIM contact**, or
2) enter in **Add contact** pressing **OK**, then select **Telephone**, **SIM card** or **Fixed directory**
- Enter the last name and press the navigator.
- Enter the number and press the navigator (**OK**).

Note: you can fill other fields if you store the contact in the phone memory (email, address, ringtone, photo, etc.).
- Press [**Save**] to store it.

Calling a contact

Several ways:
- Select a contact. Press to start the call.
- Select a contact, press **OK**, his number is displayed, press [**Call**] to start the call.
- Direct call from the idle screen (only for the contacts stored in the SIM card memory): type the number with which the contact was saved then ∗ (example : 21 ∗) or the number then #, the number is displayed, confirm.

Contact options

To display the various options, select a contact and press [**Options**].

Modifying a contact

Modify what you want and validate then select **Save** once the modifications completed.

Sending a message

To send a SMS or a MMS to a contact (see chapter **Messages**).

Sending by

To send a contact details by message or Bluetooth (my501X model) (see chapters **Messages** and **Connectivity**).

Copy to mobile/Copy to SIM

This allows you to copy your phonebook contacts from one memory to the other. Only the name and the first phone number will be copied.

Export

It allows you to copy one or several contact details to the **Multimedia**/**My Contacts** directory.
Several options:
- **current**: the details of the contact selected are copied,
- **multiple**: the details of the contacts you select are copied,
- **all**: the details of all the contacts are copied.

My numbers

You can create the entries corresponding to your own numbers in order to consult them when necessary.
Select **My numbers** and validate. Enter the different details and validate.

Memory

Select **SIM** or **Phone** and validate.
Phone: the screen displays the amount of memory used. The memory capacity is shared between the phonebook and various other features. If you lack memory, check if you can free some space.
SIM: available memory only for contacts.

Delete

It allows you to delete the contact(s) selected or all the contacts.

Set as my card/Business card

The details of a contact stored in the phone memory can be saved in a business card.
- Select a contact and press [**Options**].
- Select **Set as my card** and [**OK**]. The details are saved as **Business card**. Then you can read it, modify it or send it by SMS or MMS.

Download SIM card/Backup to SIM

This allows you to copy all the SIM contacts to the phone memory or all the phone contacts to the SIM card.

Synchronize

You can synchronize your phonebook with your archives stored in your operator's network depending on the options offered by your operator.
You have only to activate Bluetooth (my501X model), or configure your USB connection in your phone.

Add to mailing list

This menu allows you to add a contact to a mailing list.

Settings

List choice: This menu allows you to select the default phonebook (SIM, Phone, SIM and Phone) displayed when the phone switches on.
Filter criteria: This menu allows you to select the way to sort contacts in the phonebook (by name or first name).

Mailing lists

A mailing list allows you to group contacts: this list can be used to send messages easily to all the list contacts.
- In the phonebook, select the **Mailing Lists** tab pressing the navigator rightwards.
- Press [**Options**].
- Select **Add mailing list**.
- Select the list type (SMS or MMS).
- Enter a name and press the navigator.
- Then, on a list press [**Options**]. Select **Add contact** each time you want to add a contact in the list.

Messages

From this menu, you are able to send SMS and MMS. MMS is a Multimedia Message Service, which allows you to enclose photos, audio files, and others rich contents to your messages; these messages can even be composed of several slides. MMS are differently charged to SMS are. Please contact your network provider to get more information on their cost and the service availability.

Compose SMS

Select **Messages**/**Create Message**.
The language used is the one selected on the display of the phone (if the language selected is not compatible with the Easy Message T9™, the English language will be automatically selected).
When the text has been entered, [**Options**] is used to access the functions offered:
- **Add recipient**: to send the message by entering the recipient's number or selecting it in the phonebook.
- **Add Pictures**/**Sounds**/**Videos**/**My objects/Calendar/Visit cards/miniSD™**: to insert various objects into your message.
- **Add Subject**: allows you to precise a subject to your message.
- **Preview**: to display a preview of the message once composed.
- **Slide duration**: allows you to select a duration to make the text scroll automatically before sending the message.
- **Symbols**: to insert accented characters, special characters or punctuation.
- **Input mode**: **ABC mode/123 mode** (see page 20)**, T9 options** (see page 20).
- **Message type**: to select the message type (SMS or MMS).
- **Save**: to save a draft in memory.
- **Save as Template**: allows you to keep as a template a message in order to use it again.
- **Send Options** (see page 22).
- **Activate**/**Deactivate Zoom** is used to modify size of characters.

The Easy Message T9™ mode helps you to easily write your messages.

Using T9 Mode

Press once the key corresponding to the letter chosen and compose the word by continuing to press the keys corresponding to the various letters without paying attention to the display: the word is highlighted.
The same sequence of keys pressed can correspond to several words, existing on the dictionary. If the word that appears is not the word you expected, press the navigator upwards to scroll through the words corresponding to this key sequence.
Once you agree on the word proposed on the screen, press the navigator rightwards to validate it or on the **0** key (which validates and inserts a space after the word), and go on writing the next word.
If the word you are expected is not proposed, please add characters until you get the message **Add a word**? Press **Yes** and validate if the word displayed suits you or modify this word before adding it in the dictionary.
If you do not want to use T9 mode, you can change of input mode (which appear at the top right of the title bar) pressing ∗: the **123 mode** allows you to type numbers and the **ABC mode** allows you to type letters: press on one key several times to make the letter wanted appear (for example: press twice the **2** key to display **B**).

Upper case

A short press on ∗ will display the next letter in upper case.

Punctuation characters

Punctuation characters are obtained by pressing the **1** key (except in **123** mode), or with the help of **Insert** mode (fast access by briefly pressing #).

Accented characters

Accented characters are generated automatically in T9 mode.

In ABC mode accented characters are available by pressing the key supporting the non-accented character repeatedly.

Saving the message

- Select **Save** if you do not want send the message immediately or if you want to send it several times.
- Select where you want to save it (SIM card or phone). It is saved in the **Drafts** menu.

Sending the message

- Once the text entered, press the navigator or press [**Options**] and select **Add recipient**.
- Enter the receiver's number or take it in your phonebook pressing [**Options**] then selecting **Contacts**.

You alson can select a contacts list in your phonebook.

- Select **Send**.
  Note: if the message type (SMS or MMS) has not been selected when composing the message, the phone prompts for a cofirmation. You can use an email address if the message is a MMS.

Receiving messages

When you receive a message, the phone plays the ring tone that you selected, and a message icon comes on the screen of your phone.

If you do not read the messages, this icon remains displayed on the screen. When it flashes, the memory is full.

Receiving icons, backgrounds or tunes can take several seconds. An icon is flashing when the download of your message is in progress.

Note that you have two different possibilities for receiving MMS: automatically or manually; if « manual mode » is activated, then you will receive only a notification in your Inbox, meaning that a MMS is available on the MMS Server; select Retrieve in the options when you want to retrieve the MMS from the network.
For more details about automatic and retrieval modes, see « Options » on page 22.

Please contact your network provider to get more information on icons, backgrounds or tunes downloading.

Received messages are stored in the SIM card or in the phone until you choose to delete them.

Messages menu

Inbox

Messages are listed in chronological order, the latest one being displayed first.

The quantity of Not Read and Not Retrieved messages is shown. Not Retrieved and Not Read messages are shown in bold.

Outbox

This menu displays the messages that have not been sent. You can therefore send them again.

Sentbox

The **Sentbox** menu is used to store all your sent messages if you activated the option **Store sent messages** in the **Options** menu (see page 22).

Too many messages saved will quickly fill up the available memory and no further messages will be received.

For each message, its characteristics (shown with an icon) and the time (or date) of sending are displayed on the screen.

Select a message and press the navigator.
Choose one of the options given: Read, Modify, Forward, Delete, Delete all.

Drafts

When you store a composed message, it is stored among the drafts.

Select a message and press [**Options**]. The options are: Delete, Read, Modify, Details.

If you select a message and press the navigator, you can modify it.
If you want to send it, select **Modify** then press [**Options**] and select **Send**.

Templates

When composing a message, if you selected the **Save as template** option, the template is saved in this menu.
The same options as for the drafts are available for the templates.

Options

Choose one of the options given: SMS or MMS.

The SMS sending options are: store sent messages, acknowledgment, period of validity (during that period, the network provider will try to send the message), message format, msg centre n°.

The MMS options are:

- **Store sent msgs**: it is highly recommended that you keep this function deactivated, in order to avoid a full memory.
- **Retrieval mode**: if you are in a poor coverage area, it may be more convenient to choose the manual retrieval mode which gives you the retrieve later option.
- **Priority**: selection of a priority to send a message.
- **Request delivery report**: request of a delivery report when sending a message.
- **Period af validity**: during that period, the network provider will try to send the message.

Advanced settings

- **Send delivery report**: sending a delivery report when receiving a message.
- **MMS ignore**: if you want to deactivate the reception of any MMS in your phone.
- **MMS server**: to select another MMS provider, or set the parameters of a new MMS provider.
- **Display Bcc**: if you want to activate/deactivate this display.
- **Sender visibility**: you choose to display or not your phone number on the receiver's phone screen, with that message.
- **Maximum size**: if you want to activate/deactivate the option of maximum size supported for the MMS.

Memory

You may know the memory available for saving messages.
Choose one of the options given: SMS or MMS.
The SMS screen displays the memory available either on the SIM card or on the phone.
The MMS screen displays how much memory is used in Kbytes.

Local info.

This menu is used to activate reception of information broadcast by the network.
You can choose whether you want to receive this information or not (please contact your network provider).

Call Voice Mail

This function allows you to call your voicemail.
This number depends on the operator.

Group

This menu displays the mailing lists created in the phonebook.
To display the different options, press [**Options**].

- **Send message**: allows you to compose and send a message to the contacts of the mailing list.
- **Add mailing list**: allows you to create a new mailing list.
- **Modify name**: allows you to modify the mailing list name.
- **Add contact**: allows you to add a contact to the mailing list.
- **Properties**: allows you to see the type of mailing list and the number of contacts.
- **Delete**: allows you to delete the mailing list.

Camera

This menu allows you to take photos and use them for different purposes. For instance, you can send them to another phone or an Internet address, store them, use them as wallpapers or screen savers.

Taking and saving a photo

Settings before taking a photo

Zoom:

To activate zoom, use the navigator upwards or downwards or the side keys (**+** and **-**).

Note: if the zoom selected does not match with the storing format, the photo is automatically saved in an appropriate format

Other settings (pressing [**Options**]):

- **Preview mode**: to select the photo layout (portrait or landscape). To use your photos as wallpaper, we advise you to select the portrait mode.
- **Activate timer**: to take a photo with a 5, 10 or 15 second time delay.
- **Effects**: to select an effect.
- **Exposure**: to select luminosity.
- **Save new pictures**: used to select the location where the photo will be saved (phone or memory card).
- **Click sound**: to select the sound you will hear when taking a photo.
- **Photo quality**: to select the photo quality.
- **Photo format**: to select the resolution in which your photo will be saved. To get a high resolution up to 1,3 megapixels and to print high quality photos, we advise you to select the 1280*1024 resolution (landscape mode).
- **Go to video**: to take a video.

Taking a photo

- Select the **Camera** menu. The camera is now on. Look into your phone display and position your subject. Move your phone to position your photo.
- Press the navigator or on the side key, the photo is taken and stays on the phone display.

***Warning:** if you press [**Back**], you will go back to the previous screen and lose the photo you have just taken.*

- Press the navigator if you want to send the photo immediately by MMS.
- Press **Save** to save your photo, a progress bar animates then different options are displayed:
  - **Send By**: allows you to send the photo by message or Bluetooth (my501X model).
  - **New…**: allows you to take a new photo.

- **Editor**: various options to modify a photo.
  Zoom: allows you to magnify certain parts of your photo,
  Adjustment: allows you to improve contrast,
  Emboss: allows you to modify a photo with an embossed grey tint,
  Negative: allows you to change a photo into negative,
  Grey Scale: allows you to change color into black and white,
  Contrast: allows you to increase or decrease the contrast of your photo,
  Sharpen: allows you to sharpen a photo,
  Blur: allows you to add blur to a photo,
  Sepia: allows you to change colors into sepia,
  Shape: allows you to shape a photo,
  Brigthness: allows you to increase or decrease the brightness of a photo,
  Solarize: allows you to increase or decrease the solarize of a photo,
  Saturation: allows you to increase or decrease the color saturation.
- **Rename**: allows you to modify the name of a photo.
- **Add to contact**: allows you to assign a photo to a contact saved in the phonebook.
- **Use as**: allows you to select the photo as a wallpaper or screensaver.

If there is not enough memory to save the photo, a warning message appears, prompting you to confirm whether you want to go on.

Once taken, the photo has a number and is saved in **Multimedia**/**My Pictures**.

Note: using the camera during a call may disturb the call quality.

Video

Taking a video

- Select the **Video** menu.
- If necessary, select the following settings pressing [**Options**]:
  - **Video sound**: allows you to record wether not the sound when recording a video.
  - **Size restriction**: allows you to choose a video size.
  - **Save new videos t.:** allows you to select where the video is saved (phone or memory card).
  - **Go to Camera:** to take a photo.

Press the navigator to record then press [**Stop**] when you want to stop recording.

The video is automatically saved and has a number. It is saved in **Multimedia**/**My Videos**.

Note: the phone automatically stops recording when the maximum size available is reached.

Press [**Options**] to display the options:

- **Playback**: allows you to play the video.
- **Save**: then you can save it. Modify the name if you want and press **OK**.
- **Save and Send**: you can save and send the video by MMS.

Note: the videos are saved in the phone with a .3gp format.

Multimedia

The **Multimedia** menu contains the directories of all the multimedia objects recorded in your phone and the downloaded objects (photos, videos, ringtones, musics, etc.).

There are two tabs that you can select pressing the navigator rightwards or leftwards:

- **Mobile** tab (phone memory)
- **My miniSD™** tab (available if you have inserted a memory card in your phone).

You can copy the multimedia objects from the card to your phone.

To display the various options of each directory, press [**Options**].

- **Browse**: displays the list of the objects.
- **Rename**: modifies the directory name.
- **Delete**: deletes the directory (only the directories created by the user).
- **New folder**: create a new directory.
- **New**: allows you to take a new photo or video or to record a sound.
- **Format**: this option deletes all the internal memory of the phone. **Warning**: all the multimedia objects saved in this memory will be deleted.
- **Memory**: displays the memory used and available for the multimedia objects.

For each object a list of options is available (view, send, delete, etc.).

Music Player

This menu allows you to listen to musics in a contiuous way like a portable music player.
If you do not have any music in memory, use WAP to download some or connect your phone to a PC (see chapter **Multimedia**). Two tabs are displayed: **Player** and **Library**. Select **Library** pressing the navigator rightwards. The directory of the musics contained in the phone and in the memory card (if it is present) is displayed.
Select [**Options**]: you can play all the musics directly or manage them in lists.

Creating a playlist

- Select [**Options**] in the **Library** tab.
- Select **Create playlist**.
- Type a name for your playlist and press **OK**.
- The list of the musics is displayed in two tabs: those contained in the phone memory or pressing the navigator rightwards those contained in the memory card.
- Select the music you want in your playlist and press **OK** to add the music to the playlist ; do it again if you want add others or select **Add to playlist: All** to add them all to the playlist.

When pressing [**Options**] on a playlist, you can display or play the contents, add musics, create a new playlist, delete one or modify its name.

Playing your music

Player tab: This tab opens as soon as a music or a list of musics, has been selected to be played.

To display the different options, press [**Options**]:
- **Play**: to play musics of the playlist.
- **Remove from list**: allows you to remove the music selected or all the music from the list.
- **Shuffle**: to play the musics in a random way.
- **Play options**: to play the musics one by one or in a continuous way.
- **Add to Playlist**: to set a new playlist.
- **Send via Bluetooth** (my501X model): to send the music by message or Bluetooth.
- **Rename**: to rename the music.
- **Details**: properties of the music selected.

Note: music is in pause in case of incoming call, it automatically resumes at the end of the call.

WAP

WAP (Wireless Application Protocol): a protocol that translates the Internet language into WML and HTML languages that can be read by a phone. The WAP function allows you to log onto certain Internet sites. You can log onto sites that allow you to download ringtones, icons, animated screensavers, Java™ applications, videos to your phone.

The WAP Menu

The WAP navigator is under licence:

The WAP navigator and the softwares included are the exclusive property of Openwave. For this reason, it is forbidden to modify, translate, disassemble or even decompile all or part of these softwares.

Go to URL: this menu allows you to input an Internet address directly.

Bookmarks: allows to store bookmarks (addresses of Internet sites).

A bookmark stored in the list can be modified, sent or deleted.
You can receive bookmarks and add them to this list.

History: backward and forward navigation of the pages displayed are kept in memory.

Browser settings:

- **Profiles**: allows you to select or modify your provider's configuration settings or to configure others providers'settings.
- **Connection time out**: is used to choose the time after which the call is automatically disconnected if you have forgotten to log off from a service.

Note: see chapter **Idle screen** for information on @ and GPRS icons.

WAP Logging on

The connection to a WAP service on the GPRS network is not cut if an incoming call is received. You can answer the call.

If you are logging onto the GSM or GPRS network, the @ symbol flashes, the metering of the cost of the call starts as soon as it stops flashing.

Downloading objects

Some WAP sites allow you to download ringtones, icons, animated screensavers, games or JAVA™ applications. Once downloaded, they are stored in your phone's memory. You can then save them in your phone (same operation as used for downloading using messages).

WAP Logging off

To log off, press . The logoff happens automatically after a few seconds of inactivity if you forget to log off. This period is defined by the linger time setting.

GPRS

A flashing icon indicates that the phone is logging onto a GPRS network.
A non-flashing icon indicates that the GPRS network is available; if the icon is dark, it indicates that the phone is logged onto the GPRS network.

This icon is not displayed if the GPRS network is not available or if the SIM card inserted in your phone does not include the GPRS service. It may also disappear when accessing WAP services if the connection uses the GSM network instead of the GPRS network.

Games

Your phone contains one or several games, depending on model. You can download more. You are the owner of a SAGEM mobile phone which gives you the ability to download applications and games to be executed on your phone thanks to the built-in Java™ engine.

However, receiving applications from everywhere implies some basic knowledge of the possible effects of such download.

We advise you to dwonload certified games or applications from your operator sites or from www.planetsagem.com.

By default, the connection URL of your operator or of PlanetSagem is configured in your phone.

If no connection URL is configured, by selecting the **More games** menu, you display the WAP function to configure new profiles which allow you to download games or applications.

When you select a game or an application, the **General Settings**/**Connection** menu (displayed with [**Options**] key) allows you to configure a profile which only be used by the game or application to connect to the network (to exchange scores for example) but is not used to download new games or applications.

Applications

(See chapter **Games**).

Alarm

This menu allows you to set and activate the alarm.
The alarm works even when the phone is switched off.

Timer

This menu is used to set and activate the timer.
The alarm icon appears on the idle screen.

Calculator

This menu allows you to use your phone as a calculator.
Use the following keys to make calculations:
- Upwards: Add, downwards: Subtract, rightwards: Multiply, lefwards: Divide

The following keys are used for:
- [–]: Equals or convert [–]: Delete
- ∗ **#**: Decimal point.

*If no calculations are being run, pressing [**Convert**] allows you to use the value in the **converter** directly.*

Converter

This menu allows you to convert one currency to another.
Enter a value and press the navigator upwards to convert from one currency to another, or downwards to convert back.
Pressing [**Options**] allows you to use the following options:
- **Rapid exchange**
  If the Rapid exchange is activated, the converter will work in the idle screen by entering the desired numbers and pressing the navigator to convert.

- **Exchange rate**
  Enter the exchange rate corresponding to the chosen currency.
- **Currency**
  Enter the two types of currency to be converted.
- **Goto Calculator**
  This option allows you to use immediately the value converted in the calculator.

ToDo

This menu allows you to add ToDo's, access category-based Todo management and delete all the ToDo's.

If there are not any ToDo, you directly access to the options below.

- **Add written ToDo**/**Add vocal ToDo**: allows you to add ToDo of the text or voice type. Fill in the different items. Save the ToDo.
- **Categories**: allows you to see the different ToDo categories, assign a specific ring tone to each individual ToDo, know the number of ToDo's in each category and see them.
- **Memory**: allows you to view the memory used by the different functions of your ToDo.
- **Synchronize**: allows you to synchronise a ToDo with a computer.

ToDo actions menu

This menu allows you to do all the actions possible on any ToDo.

On the **Applications** menu, please select **ToDo**.

To display a ToDo, select it in the list and press the navigator.

To display the different options, press [**Options**].

- **Modify ToDo**: allows you to modify the ToDo properties.
- **Delete**: allows you to delete the ToDo.
- **Send By**: allows you to send the the ToDo by message or Bluetooth (my501X model) (see chapter **Connectivity**).
- **Export**: it allows you to copy the event to the **Multimedia**/**My Calendar** directory.
- **Delete all**: allows you to delete all the ToDo's from your ToDo.

Services

This item may not be present on your phone's menu, as its contents depends on your SIM.

Calendar

This menu gives you access to your diary and get to a day, week, month or specific date. It lets you add events, access the global actions for all the events and manage them by event category.

Calendar menu

This menu lets you add events, manage events by category, see the available memory and delete all the events.

- **Add Written Event**/**Add Vocal Event**: allows you to add events of the text or voice type. Fill in the different items. Save the event.
- **Delete**: allows you to schedule the deletion of events that took place more than one day, week or month ago.
- **Memory**: allows you to view the memory capacity used by the different functions of your diary.
- **Delete all**: allows you to delete all the events from your diary.
- **Categories**: allows you to see the different event categories, assign a specific ring tone to each individual category, know the number of events in each category and see them.
- **Synchronize**: you can synchronize your organizer with your archives stored in your operator's network depending on the options offered by your operator.
  You have only to activate Bluetooth (my501X model), or configure your USB connection in your phone.

The other menus are:

- **See month**: allows you to access events on a month-by-month basis.
- **See week**: allows you to access events on a week-by-week basis.
- **See today**: allows you to access the events for the current day and the actions possible on any event (see, modify, delete and send).
- **See date**: allows you to access events at a specific date.

Settings

Phone settings

Silent mode

This menu allows you to switch to Silent mode.
Silent mode can also be accessed via the idle screen by holding down the # key.

When the phone is in silent mode, this relevant icon appears on the idle screen.
In this mode, the ring tone will not function, except for the alarm clock.

Ring tones

This menu allows you to allocate a ring tone to different functions (call receiving, message receiving, alarm).

Vibrate

This menu allows you to activate the vibrate mode for calls.

Languages

This menu allows you to choose your phone's display language.
Select your language and validate.
If you select **Automatic**, the language used will be the one relative to your SIM card.

Beeps

This menu allows you to activate a beep for the battery, the keypad or the network.

Date/Time

Set Date/Time

This menu allows you to set the date and time of your phone.

Automatic update

This menu allows you to choose manual or automatic updating of date and time (after switch off of your phone or when going abroad for instance) (service depending on the operator).

Please select Automatic, Manual or On demand and press [**Select**].

Display

This menu allows you to select the date and time display.

In the list that appears, select the desired display type between: Analog, Digital, None and validate.

Time zone

This menu allows you to change time in relation to the GMT time.

Choose the time of the country desired by calculating the time from the GMT time.

Daylight savings

This menu allows you to set your phone to the summer/winter time.

Select 1 h, 2 h **Summer time** or **Winter time** depending on the season, and validate.

Display

This menu allows you to customize your screen by choosing a different presentation.

Wallpaper

This menu allows you to display the background picture you want on your phone.

Note: you can select wallpapers through the phone default wallpapers, the pictures downloaded in **Multimedia**/**My Pictures** and the pictures of your memory card.

- *No wallpaper*: select **None**.
- *Several wallpapers in a random way*: select **Random**.
- *A specific wallpaper*: select **Multimedia**:
  - Press [**Select**] on the wallpaper name, the wallpaper is selected.
    or
  - Press the navigator: the picture is displayed. Press [**Select**] to select it as your phone wallpaper or press the navigator upwards or downwards to display others.

Skins

This menu allows you to select the background picture when displaying menus.

Screensaver

This menu allows you to display an animation when the phone is in standby mode.

Note: you can select screensavers through the phone default screensaver, the pictures downloaded in **Multimedia/My Pictures** and the pictures of your memory card.

- *No screensaver*: select **Normal screen**.
- *Several wallpapers in a random way*: select **Slide Show**.
- *A specific screensaver*: select **Multimedia**:
  - Press [**Select**] on the screensaver name, the screensaver is selected; or
  - Press the navigator: the picture is displayed. Press [**Select**] to select it as your phone screensaver or press the navigator upwards or downwards to display others.

Operator logo

This menu allows you to display your operator's logo on the idle screen.

On the menu, please select the menu and [**Select**].

Select **Activate** or **Deactivate** and press [**OK**].

Energy saving

Economic mode

You can select one of the following eco modes:

- **Complete**: the screen is off. Press **OK**, the red or green key to turn on the backlight and see the time. Press ∗ **OK** to light up the screen and enter the menus. This mode gives the maximum efficiency of the battery life.
- **Partial**: the screen is off. Press the red key to light up the screen and enter the menus.
- **Unlocked keyboard**: the keypad is always active, meaning that when you press any key, it allows you to light up the screen and enter the menus. This mode decreases the battery life.

Backlight

- **Screen only**: only the screen is lit up.
- **Full backlight**: both the screen and the keypad are lit up.

Note: in any case, after a certain time of inactivity, the backlight will be automatically turned off to save battery life.

Contacts

This menu allows you to select the way to sort contacts in the phonebook (by name or first name) and the filter applied on the contacts list display (SIM contacts, phone memory or both).

Calls

The **Calls** menu allows you to manage all the calls functions (call forward, displaying numbers, call waiting, voicemail number, etc.).

Call forward

Depending on your subscription, this service allows you to forward incoming calls to a different number or to the voice mailbox.
Choose the type of forwarding you want from the options available.

View last calls

This menu allows you to access the list of last numbers used.
Fast access to the list of calls from the idle screen: press .

Counters

This menu allows you to consult the duration of the up calls.
It can also be used to check the volume of data exchanged in GPRS.

Display numbers

This menu allows you to modify the status of the display number function.
Select one of the options given: Anonymous mode, My number, Callers' number.

Anonymous mode

You have the ability to mask your number on the phone of the person you are calling.

- **Preset**: network default mode.
- **Yes**: you choose to active anonymous mode and then not to display your number.
- **No**: you choose not to activate anonymous mode and then to display your number.

Call waiting

(Operator-dependent service).

During a call, you may be informed that a caller is trying to reach you: you hear a special tone. The caller's identity is displayed on the screen (name or number).

You can **activate, deactivate,** or **status** of the call waiting service in order to check if it is active or not.

During a call, if a second caller tries to contact you, the screen displays the call warning.

Auto redial

This menu allows you to call back a caller you have not managed to reach.

You can set the redial function to inactive, on request or systematic.

If you choose **On demand**, your phone will offer to redial your caller automatically if his number is busy.

Blacklist

The blacklist is used to limit failures on automatic calls (calls generated by the automatic redial function or by applications: data, fax for example).

When several automatic calls failed with a number (number busy or unknown), this number is put in the blacklist and no automatic call will be done with this number any more until you delete it from the blacklist.

Note: this function does not apply to the calls performed manually.

Voicemail

This function is used to record your voicemail access number.

This number will be used during a call to the voice mailbox using the programmable keys.

Enter your answer phone number and validate.

New number

After an incoming or outgoing call with a number not stored in the phonebook, this option allows you to activate or deactivate a request to store the number in the phonebook.

Networks

This menu allows you to configure network preferences.
Choose **Selection** to activate (automatically or manually) one of the networks accessible in the area in which your are located.
Choose **Preferred** to view all the pre-registered networks.
Choose **Network type** to select your network: GSM-DCS or PCS.
Choose **GPRS** to select the way you want to be attached on the GPRS network: always, or only when needed (when launching a data connection).

Security

This menu allows you to configure your phone's security settings.

PIN number

This menu allows you to activate and modify your phone's PIN.
To modify the PIN, select **Modify PIN code** and [**Select**].
Enter old PIN and validate.
Enter new PIN twice and validate.
To activate or deactivate the PIN, select the **Control PIN** menu and [**Select**].
Enter PIN and validate.
Select **Activate** or **Deactivate** and validate.

PIN2 number

You have a second PIN number to allow you to access certain functions (*).
Proceed as above in order to activate, deactivate or modify PIN number 2 of your phone.

(*) These functions may or may not be available depending on your SIM card.

Phone code

The Phone code menu allows you to activate the phone code so that it is requested and checked whenever the phone is switched on if a different SIM card is used. This code is automatically linked to the SIM card installed when the phone is activated, for example to protect the phone if stolen.

Select **Check** and [**Select**].

Enter 0000 (the factory code, by default) and validate.

Select **Activate** or **Deactivate** and validate.

To modify the phone code, select **Modify** and validate.

Enter old phone code and validate.

Enter new phone code and validate.

Enter phone code again to confirm it and validate.

Confidentiality

This menu allows the activation or deactivation of automatic deletion, after power off/on, of outgoing calls, messages stored or organizer events.

Select **Activate** or **Deactivate** and validate.

Operator

This menu allows you to modify the call barring.

Access to this service depends on your type of subscription.

Call barring

This menu allows you to block the sending or receiving of certain calls.

Before you can use this service, a password will be provided by your operator when you take out your subscription.

Access to this service depends on your subscription type.

To activate call barring :

- Select incoming or outgoing calls.
- Select the call type on which you want to activate call barring.
- Select:
  - either All,
  - or If roaming, if you are away from your home country and if roaming is available, only incoming calls will be blocked.
- Select Activation and enter password.

Fixed dialling

This menu allows you to restrict the outgoing calls.
The availability of this menu depends on your SIM.
Enter PIN2 number and validate.
Select **Activate** or **Deactivate** and validate.
Proceed as for any other phonebook.
When activating this function, only the numbers stored in the phonebook can be called.
This phonebook is linked to the SIM card, and its size depends on the card's capacity.

Cost

This menu allows you to control the cost of your calls (*).
The **Cost** menu (*) lets you check the cost of the last call you made and of all the calls you made since you last deleted them.
The **Delete costs** menu (*) lets you delete the cost of your last call and reset the cost counter after entering your PIN 2 code.

(*) WARNING

Depending on how the networks and associated subscription cards are configured, some functions may be unavailable (these are marked out with *).

Player settings

Player Priority: to give priority to phone (in case of incoming call) or to playing music.
Play options: to play the musics one by one or in a continuous way.

Browser settings

This menu allows you to set various parameters needed for WAP connection (see chapter **WAP**).

Camera

This menu allows you to set the camera features of your phone.

- **Timer**: this menu enables you to take a photo with a 5, 10 or 15 second time delay.
- **Click sound**: This menu allows you to select the sound you will hear when taking a photo.
- **Photo format**: This menu allows you to choose the format in which your photo will be saved.
- **Photo quality**: This menu allows you to select the photo quality.

Video settings

This menu allows you to set the video features of your phone.
- **Video sound**: This menu allows you to select or not the sound when recording a video.
- **Video size restriction**: This menu allows you to choose a video size.

Shortcuts

This menu allows you to customize the settings of your phone to make it as convenient as possible for you to use.
(Function available depending on model).
This menu allows you to allocate functions to the programmable keys: [–] [–].
Select the key that you wish to modify and validate.
Choose the function that you want to allocate to this key and validate.

Reset settings

This menu allows you to reset the phone parameters.

Storage

This menu allows you to select (phone memory or memory card) where the sounds, pictures, videos or applications downloads will be stored as well as the pictures, videos and sounds taken with your phone.

Keys checking

When activating this choice, you will be warned when a using right of a multimedia object (ringtone or wallpaper for instance) will soon expire.

Help

This menu allows you to activate or deactivate the display of the help in the phone.

Connectivity

You can exchange with other devices (PC, mobile phones, personal assistants, printers, etc.) various data: pictures, sounds, photos, videos, To Do tasks, organiser events, contacts, etc.

Data exchange can be done through:

- a serial or USB cable,
- a bluetooth connection (my501X model).

If you have inserted a memory card in your phone, it is considered as an additional memory in the Windows explorer files directory; you can copy/paste.

If you want to exchange objects between the phone's memory and a PC, you simply need to connect the phone to the PC with a USB cable. A removable disc appears in the Windows Explorer tree structure; you may copy/and paste into it.

Note: If a call comes in during an exchange of data with your PC, the link will be interrupted and will have to be manually re-started.

Bluetooth (my501X model)

This menu allows you to set your phone Bluetooth connection in order to communicate with other devices equipped with Bluetooth: for example, an audio connection with a pedestrian kit, a car kit or a data connection with a PC.

Bluetooth is a free wireless connection, with a 10 metre maximum range.

- **Paired devices**: allows you to search for devices which may connect with Bluetooth link with your phone (for instance: headset).
- **Mode**: allows you to activate the phone Bluetooth connection.
  - Off: Bluetooth connection impossible.
  - On and hidden: your phone is not detected by the other devices but the phone detects the other devices.
  - On and visible: your phone can be detected by another device.
- **My Bluetooth name**: allows you to assign a name to your phone for the Bluetooth connection. This name is displayed on the devices connected.

Serial speed

This menu enables you to select the speed to be used for data exchanges via your phone's serial port. Except for specific requirements, it is advisable to stick to the default setting: **Automatic**.

Car kit or headset

This menu allows you to configure the options of the phone with a pedestrian kit or a car kit (Automatic response, Switch off, Kit volume).

USB mode

This menu allows you to select a mode to connect the phone to a peripheral with the USB cable available as an accessory.
- **At plugging-in**: if you select this option, when connecting a USB cable, the phone asks you to select the mode you want.
- **Modem**: to exchange data between the phone memory and a PC.
- **Pictbridge**: to connect the phone to a printer (printing photos) without using a PC.
- **USB key**: to exchange data between the phone (memory card inserted in the phone or phone internal memory) and a PC.

Notes when the phone is connected to a personal computer in USB key mode:
- The memory card is not detected by the phone. Consequently, if you have configured your phone with a wallpaper or a ring tone stored in the memory card, those ones will not be used during the connections.
- Camera is not available, neither in photo mode, nor in video mode.

SyncML

You can synchronize your phonebook, your organizer or your ToDos with your archives stored in your operator's network depending on the options offered by your operator.

You have only to activate Bluetooth (my501X model) or configure your USB connection in your phone.

Technical features

Weight: 93 g
Size: 100 x 46 x 16.5 mm
Original battery: Li-ion 830 mAh
Battery life calls/standby: up to 3 h/250 h (these values are theoretical ones and given for information only)
Multimedia objects supported:
- Audio formats: iMelody, Midi, wave, MP3, AAC, AMR
- Graphic formats: bmp, png, gif, gif animés, jpeg, 3gp, mpeg4 (depending on model)

Size of memory available for messages: 100 SMS
Size of memory available for the phonenook and the multimedia objects: up to 32 Mb
Maximum size of each message:
- SMS: < 160 characters
- MMS: < 300 kB for outgoing messagezs, 100 kB for incoming messages (depends on the phone configuration and on the operator reservations)

Compatible profiles for accessories:
- Car kit - Headset - Hands-free kit: HSP and HFP
- Object transfer: OPP
- Modem: SPP/DUNP

Using temperature: from - 10 °C to + 55 °C

Certification and safety information for the United States and countries using FCC standards

FCC Part 15 statement

This device complies with part 15 and part 24 of the FCC rules. Operation is subject to the following two conditions: (1) this device may not cause harmful interference, and (2) this device must accept any interference, including interference that may cause undesired operation.

This equipment has been tested and found to comply with the limits for a Class B digital device, pursuant to Part 15 of the FCC Rules. These limits are designed to provide reasonable protection against harmful interference in a residential installation. This equipment generates, uses and can radiate radio frequency energy and, if not installed and used in accordance with the instructions, may cause harmful interference to radio communications. However, there is no guarantee that interference will not occur in a particular installation. If this equipment does cause harmful interference to radio or television reception, which can be determined by turning the equipment off and on, the user is encouraged to try to correct the interference by one or more of the following measures:

- Reorient or relocate the receiving antenna.
- Increase the separation between the equipment and receiver.
- Connect the equipment into an outlet on a circuit different from that to which the receiver is connected.

Consult the dealer or an experienced radio/TV technician for help.

WARNING

Changes or modifications made to this equipment not expressly approved by Sagem Communication for compliance could void the user's authority to operate the equipment.

FCC SAR information

THIS MODEL PHONE MEETS THE FCC'S REQUIREMENTS FOR EXPOSURE TO RADIO WAVES

Your wireless phone is a radio transmitter and receiver. It is designed and manufactured not to exceed the limits for exposure to radiofrequency (RF) energy set by the United States Federal Communications Commission (FCC). These limits are part of comprehensive guidelines and establish permitted levels of RF energy for the general population. The guidelines are based on standards that were developed by independent scientific organizations through periodic and thorough evaluation of scientific studies. The standards include a substantial safety margin designed to assure the safety of all persons, regardless of age and health.

The exposure standard for wireless mobile phones employs a unit of measurement known as the Specific Absorption Rate, or SAR. The SAR limit set by the FCC and Health Canada is 1.6 W/kg (*). Tests for SAR are conducted using standard operating positions accepted by the FCC with the phone transmitting at its highest certified power level in all tested frequency bands. Although the SAR is determined at the highest certified power level, the actual SAR level of the phone while operating can be well below the maximum value. This is because the phone is designed to operate at multiple power levels so as to use only the power required to reach the network. In general, the closer you are to a wireless base station antenna, the lower the power output.

Before a phone model is available for sale to the public, it must be tested and certified to the FCC that it does not exceed the RF limit established by the government-adopted requirement for safe exposure. The tests are performed in positions and locations (i.e., at the ear and worn on the body) as required by the FCC for each model.

The highest SAR value for these model phones as reported to the FCC when tested for use at the ear and when worn on the body are (measured at a distance of 0.59 inches (1.5 cm)):

	SAR at the ear (W/kg)	SAR worn on the body (W/kg)
Version	**PCS 1900**	
my500X	0.338	1.01
my501X	0.337	0.887

(*) In the United States and Canada, the SAR limit for mobile phones used by the public is 1.6 watts/kilogram (W/kg) averaged over one gram of tissue. The standard incorporates a substantial margin of safety to give additional protection for the public and to account for any variations in measurements.

While there may be differences between the SAR levels of various phones and at various positions, they all meet the FCC requirement. The FCC has granted an Equipment Authorization for this model phone with all reported SAR levels evaluated as in compliance with the FCC RF exposure guidelines. SAR information on this model phone is on file with the FCC and can be found under the Display Grant section of http://www.fcc.gov/oet/fccid after searching on FCC ID M9HE2006 (E2006 - my501X) and FCC ID M9HE2006L (E2006L - my500X).

Additional Information can be found on the website of the World Health Organization (http://www.who.int/emf).

Safety Information

Aircraft: Switch off your wireless device whenever you are instructed to do so by airport or airline staff. If your device offers a “flight mode” or similar feature, consult airline staff as to its use in flight.

Driving: Full attention should be given to driving at all times, and regulations restricting the use of wireless devices while driving must be observed. For further driving safety tips, please refer to **Driving safety tips** at page 53.

Hospitals: Mobile phones should be switched off whenever you are requested to do so in hospitals, clinics or health care facilities. These requests are designed to prevent possible interference with sensitive medical instruments.

Gas stations: Obey all posted signs with respect to the use of wireless devices or other radio equipment in locations with flammable material and chemicals. Switch of your wireless device whenever you are instructed to do so by authorized staff.

Interference with personal medical devices: You should always consult your physician and review the device manufacturer's instructions to determine if operation of your phone may interfere with the operation of your medical device. As a general rule:

- **For pacemakers:** Pacemaker manufacturers recommend that a minimum separation of 6 inches (15 cm) be maintained between a mobile phone and a pacemaker to avoid potential interference with the pacemaker. To achieve this, use the phone on the opposite ear to your pace maker and do not carry it in a breast pocket.
- **For hearing aids:** Some digital wireless phones may interfere with some hearing aids. In the event of such interference, you may want to consult your hearing aid manufacturer to discuss alternatives.

The ring tone, info tones, and handsfree talking are reproduced through the loudspeaker. Do not hold the phone to your ear when it rings or when you have switched on the handsfree function (at least 3.9 inches (10 cm)).

Use only batteries and charging devices designed for your phone. Otherwise you risk serious damage to health and property and may void any warranty.

CAUTION! Small parts like the SIM card could be swallowed by young children.

Do NOT open the phone. Only the battery and the SIM card may be removed. Do NOT open the battery.

Keep the battery out of chidren’s reach. Do not allow the battery to be put into the mouth.

Distance of operation

This phone is designed to comply with the FCC radio frequency (RF) exposure guidelines when used as follows:

- **Against the ear:** Place or receive a phone call and hold the phone as you would a wireline telephone.
- **Body worn:** When transmitting, place the phone in a carrying accessory that contains no metal and positions the phone a minimum of 0.59 inches (1.5 cm) from your body. Use of other accessories may not ensure compliance with exposure guidelines. If you do not use a body worn accessory and are not holding the phone at the ear, position the phone a minimum of 0.59 inches (1.5 cm) from your body.
- **Data operation:** When using a data feature, position the phone a minimum of 0.59 inches (1.5 cm) from your body for the whole duration of the data transmission.

FDA consumer information on wireless phones

The US Food and Drug Administration (FDA) provides consumer information on wireless phones at: http://www.fda.gov/cellphones/qa.html.

Following are safety related questions and answers discussed at this web site:

Do wireless phones pose a health hazard?

The available scientific evidence does not show that any health problems are associated with using wireless phones. There is no proof, however, that wireless phones are absolutely safe. Wireless phones emit low levels of radiofrequency energy (RF) in the microwave range while being used. They also emit very low levels of RF when in the stand-by mode. Whereas high levels of RF can produce health effects (by heating tissue), exposure to low level RF that does not produce heating effects causes no known adverse health effects. Many studies of low level RF exposures have not found any biological effects. Some studies have suggested that some biological effects may occur, but such findings have not been confirmed by additional research. In some cases, other researchers have had difficulty in reproducing those studies, or in determining the reasons for inconsistent results.

What is FDA's role concerning the safety of wireless phones?

Under the law, FDA does not review the safety of radiation-emitting consumer products such as wireless phones before they can be sold, as it does with new drugs or medical devices. However, the agency has authority to take action if wireless phones are shown to emit radiofrequency energy (RF) at a level that is hazardous to the user. In such a case, FDA could require the manufacturers of wireless phones to notify users of the health hazard and to repair, replace or recall the phones so that the hazard no longer exists.

Although the existing scientific data do not justify FDA regulatory actions, FDA has urged the wireless phone industry to take a number of steps, including the following:

- Support needed research into possible biological effects of RF of the type emitted by wireless phones;
- Design wireless phones in a way that minimizes any RF exposure to the user that is not necessary for device function; and
- Cooperate in providing users of wireless phones with the best possible information on possible effects of wireless phone use on human health.

FDA belongs to an interagency working group of the federal agencies that have responsibility for different aspects of RF safety to ensure coordinated efforts at the federal level. The following agencies belong to this working group:

- National Institute for Occupational Safety and Health
- Environmental Protection Agency
- Federal Communications Commission
- Occupational Safety and Health Administration
- National Telecommunications and Information Administration

The National Institutes of Health participates in some interagency working group activities, as well.

FDA shares regulatory responsibilities for wireless phones with the Federal Communications Commission (FCC). All phones that are sold in the United States must comply with FCC safety guidelines that limit RF exposure. FCC relies on FDA and other health agencies for safety questions about wireless phones.

FCC also regulates the base stations that the wireless phone networks rely upon. While these base stations operate at higher power than do the wireless phones themselves, the RF exposures that people get from these base stations are typically thousands of times lower than those they can get from wireless phones. Base stations are thus not the primary subject of the safety questions discussed in this document.

What is FDA doing to find out more about the possible health effects of wireless phone RF?

FDA is working with the U.S. National Toxicology Program and with groups of investigators around the world to ensure that high priority animal studies are conducted to address important questions about the effects of exposure to radiofrequency energy (RF).

FDA has been a leading participant in the World Health Organization International Electromagnetic Fields (EMF) Project since its inception in 1996. An influential result of this work has been the development of a detailed agenda of research needs that has driven the establishment of new research programs around the world. The Project has also helped develop a series of public information documents on EMF issues.

FDA and the Cellular Telecommunications & Internet Association (CTIA) have a formal Cooperative Research and Development Agreement (CRADA) to do research on wireless phone safety. FDA provides the scientific oversight, obtaining input from experts in government, industry, and academic organizations. CTIA-funded research is conducted through contracts to independent investigators. The initial research will include both laboratory studies and studies of wireless phone users. The CRADA will also include a broad assessment of additional research needs in the context of the latest research developments around the world.

What steps can I take to reduce my exposure to radiofrequency energy from my wireless phone?

If there is a risk from these products--and at this point we do not know that there is--it is probably very small. But if you are concerned about avoiding even potential risks, you can take a few simple steps to minimize your exposure to radiofrequency energy (RF). Since time is a key factor in how much exposure a person receives, reducing the amount of time spent using a wireless phone will reduce RF exposure.

If you must conduct extended conversations by wireless phone every day, you could place more distance between your body and the source of the RF, since the exposure level drops off dramatically with distance. For example, you could use a headset and carry the wireless phone away from your body or use a wireless phone connected to a remote antenna.

Again, the scientific data **do not** demonstrate that wireless phones are harmful. But if you are concerned about the RF exposure from these products, you can use measures like those described above to reduce your RF exposure from wireless phone use.

What about children using wireless phones?

The scientific evidence does not show a danger to users of wireless phones, including children and teenagers. If you want to take steps to lower exposure to radiofrequency energy (RF), the measures described above would apply to children and teenagers using wireless phones. Reducing the time of wireless phone use and increasing the distance between the user and the RF source will reduce RF exposure.

Some groups sponsored by other national governments have advised that children be discouraged from using wireless phones at all.

Do hands-free kits for wireless phones reduce risks from exposure to RF emissions?

Since there are no known risks from exposure to RF emissions from wireless phones, there is no reason to believe that handsfree kits reduce risks. Hands-free kits can be used with wireless phones for convenience and comfort. These systems reduce the absorption of RF energy in the head because the phone, which is the source of the RF emissions, will not be placed against the head. On the other hand, if the phone is mounted against the waist or other part of the body during use, then that part of the body will absorb more RF energy. Wireless phones marketed in the U.S. are required to meet safety requirements regardless of whether they are used against the head or against the body. Either configuration should result in compliance with the safety limit.

Do wireless phone accessories that claim to shield the head from RF radiation work?

Since there are no known risks from exposure to RF emissions from wireless phones, there is no reason to believe that accessories that claim to shield the head from those emissions reduce risks. Some products that claim to shield the user from RF absorption use special phone cases, while others involve nothing more than a metallic accessory attached to the phone.

Studies have shown that these products generally do not work as advertised. Unlike "hand-free" kits, these so-called "shields" may interfere with proper operation of the phone. The phone may be forced to boost its power to compensate, leading to an increase in RF absorption.

Driving safety tips

Wireless phones give people the ability to communicate almost anywhere, anytime. But an important responsibility accompanies those benefits, one that every wireless phone user must uphold. When driving a car, driving is your first responsibility.

Below are safety tips to follow while driving and using a wireless phone that should be easy to remember.

Get to know your wireless phone and its features such as speed dial and redial.

When available, use a hands free device.

Position your wireless phone within easy reach and where you can grab it without removing your eyes from the road. If you get an incoming call at an inconvenient time, if possible, let your voice mail answer it for you.

Let the person you are speaking with know you are driving; if necessary, suspend the call in heavy traffic or hazardous weather conditions.

Do not take notes or look up phone numbers while driving.

Dial sensibly and assess the traffic; if possible, place calls when you are not moving or before pulling into traffic. Try to plan your calls before you begin your trip. But if you need to dial while driving, follow this simple tip--dial only a few numbers, check the road and your mirrors, then continue.

Do not engage in stressful or emotional conversations that may be distracting.

Use your wireless phone to call for help. Dial 9-1-1 or other local emergency number in the case of fire, traffic accident, road hazard or medical emergency.

Use your wireless phone to help others in emergencies. If you see an auto accident, crime in progress or other serious emergency where lives are in danger, call 9-1-1 or other local emergency number.

Call roadside assistance or a special wireless non-emergency assistance number when necessary. If you see a broken-down vehicle posing no serious hazard, a broken traffic signal, a minor traffic accident where no one appears injured or a vehicle you know to be stolen, call roadside assistance or other special non-emergency wireless number.

Certification and safety information for Europe and countries using CE standards CE

CE conformance statement

Déclaration CE de Conformité

Fabricant *Manufacturer*	**Sagem Communication**
Adresse *Address*	**Le Ponant de Paris** 27 rue Leblanc - 75512 Paris cedex 15 - FRANCE

Déclare sous sa responsabilité que le produit
Declares under our sole responsibility that our product

Nom du produit *Product Name*	Triple Band GSM/DCS/PCS - E2006L (my500X)

est conforme aux exigences des directives européennes suivantes :
conforms to the requirements of the following EEC directives:

	EEC Directive 1999/5/CE
Sécurité (*Safety*)	**EN 60950**
CEM (*EMC*)	**EN 301 489-1** **EN 301 489-7**
Réseau (*Network*)	**3GPP TS 51.010-1 v 7.0.0 avec GCF-CC v 3.21.1 inclus** *(3GPP TS 51.010-1 v 7.0.0 selected with GCF-CC v 3.21.1 included)* **EN 301 511 V9.0.2**
Santé (*Health*)	**EN 50360, EN 50361**

Lieu et date
(Place and date of issue) Cergy St Christophe - May 30th, 2006

Signature

Déclaration CE de Conformité

Fabricant *Manufacturer*	**Sagem Communication**
Adresse *Address*	**Le Ponant de Paris** 27 rue Leblanc - 75512 Paris cedex 15 - FRANCE

Déclare sous sa responsabilité que le produit
Declares under our sole responsibility that our product

Nom du produit *Product Name*	Triple Band GSM/DCS/PCS BT - E2006 (my501X)

est conforme aux exigences des directives européennes suivantes :
conforms to the requirements of the following EEC directives:

	EEC Directive 1999/5/CE
Sécurité (*Safety*)	**EN 60950**
CEM (*EMC*)	**EN 301 489-1** **EN 301 489-7** **EN 301 489-17**
Réseau (*Network*)	**3GPP TS 51.010-1 v 7.0.0 avec GCF-CC v 3.21.1 inclus** *(3GPP TS 51.010-1 v 7.0.0 selected with GCF-CC v 3.21.1 included)* **EN 301 511 V9.0.2** **EN 300 328-2**
Santé (*Health*)	**EN 50360, EN 50361**

Lieu et date
(Place and date of issue) Cergy St Christophe - May 30th, 2006

Signature

Safety information

Never attempt to disassemble your phone. You alone are responsible for how you use your phone and any consequences of its use.
As a general rule, always switch off your phone wherever the use of a phone is prohibited.
Use of your phone is subject to safety measures designed to protect users and their environment.
Do not use your phone in damp areas (bathroom, swimming pool…). Protect it from liquids and other moisture.
Do not expose your phone to extreme temperatures lower than - 10°C and higher than + 55°C.
The physicochemical processes created by chargers impose temperature limits when charging the battery. Your phone automatically protects the batteries in extreme temperatures.
Do not leave your phone within the reach of small children (certain removable parts may be accidentally ingested).

Electrical safety

Only use the chargers listed in the manufacturer's catalogue. Using any other charger may be dangerous; it would also invalidate your warranty. Line voltage must be exactly the one indicated on the charger's serial plate.

Aircraft safety

When travelling by plane, you will need to switch your phone off when so instructed by the cabin crew or the warning signs.

Using a mobile phone may be dangerous to the operation of the aircraft and may disrupt the phone network.

Its use is illegal and you could be prosecuted or banned from using cellular networks in the future if you do not abide by these regulations.

Explosive materials

Please comply with warning signs at petrol station asking you to switch your phone off. You will need to comply with radio equipment usage restrictions in places such as chemical plants, fuel depots and at any location where blasting operations are under way.

Electronic equipment

To avoid the risk of demagnetisation, do not let electronic devices close to your phone for a long time.

Electronic medical equipment

Your phone is a radio transmitter which may interfere with electronic medical equipment or implants, such as hearing aids, pacemakers, insulin pumps, etc. It is recommended that a minimum separation of 15 cm be maintained between the phone and an implant. Your doctor or the manufacturers of such equipment will be able to give you any advice you may need in this area.

Hospitals

Always make sure that your phone is switched off in hospitals when so instructed by warning signs or by medical staff.

Road safety

Do not use your phone when driving. In order to give your full attention to driving, stop and park safely before making a call. You must comply with any current legislation.

CE Environment

Packaging

To facilitate the recycling of packaging materials, please obey the sorting rules instituted locally for this type of waste.

Batteries

Spent batteries must be deposited at the designated collection points.

The product

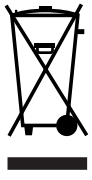

The crossed-out waste bin mark affixed to the product means that it belongs to the family of electrical and electronic equipment.

To promote the recycling and recovery of waste electrical and electronic equipment (WEEE) and at the same time safeguard the environment, European regulations require you to obey the sorting rules instituted locally for this type of waste.

For Customers in the United States

LIMITED WARRANTY

Brightstar US, Inc. (Brightstar) warrants this product including any accessories sold for use with the products against defects in materials or workmanship under normal usage for the periods outlined in the warranty provided with the product, as follows:

DEAD ON ARRIVAL / OUT OF BOX FAILURE (DOA):

This product is for standard consumer use only and is guaranteed to be in proper working order as is determined upon initial removal from the package and subsequent power up and test call. If this product is determined to be defective, Brightstar will repair or replace the product, at its option, at no charge.

OUT OF WARRANTY REPAIR

Any unit requiring repair not covered by the warranty requires authorization from your service provider and Brightstar. Contact your service provider to obtain this authorization.

This warranty is valid only in the United States.

OTHER CONDITIONS

If Brightstar chooses to replace the equipment, Brightstar may replace it with reconditioned equipment. Parts used in repairing or replacing the equipment will be warranted for 90 days from the date the equipment is returned to you. This warranty is not transferable.

LIMITATIONS AND EXCLUSIONS

TO THE EXTENT PERMITTED BY APPLICABLE LAW, BRIGHTSTAR WILL NOT BE RESPONSIBLE FOR ANY IMPLIED WARRANTIES, INCLUDING WITHOUT LIMITATION, THE IMPLIED WARRANTIES OF MERCHANTIBILITY OR FITNESS FOR A PARTICULAR PURPOSE. BRIGHTSTAR WILL NOT, IN ANY EVENT, BE LIABLE IN CONTRACT OR TORT FOR DAMAGES IN EXCESS OF THE PURCHASE PRICE OF THE PRODUCT OR ACCESSORY, OR FOR ANY INCIDENTAL, INDIRECT, SPECIAL OR CONSEQUENTIAL DAMAGES OF ANY KIND, INCLUDING TRAVEL EXPENSE, TELEPHONE CHARGES, LOSS OF REVENUE, LOSS OF TIME, INCONVENIENCE LOSS OF USE OF EQUIPMENT, LOSS OF INFORMATION OR DATA, OR OTHER DAMAGE OR LOSS CAUSED BY OR IN CONNETION WITH THE PRODUCTS, ACCESSORIES, SOFTWARE OR EQUIIPMENT FAILING TO FUNCTION PROPERLY. THIS WARRANTY SETS FORTH ALL OF BRIGHTSTAR'S REPONSIBILITIES REGARDING THIS PRODUCT AND ITS ACCESSORIES.

Some states and jurisdictions do not allow the exclusion or limitation of incidental or consequential damages, or allow limitations on how long an implied warranty lasts, so the above limitations or exclusions may not apply to you.

Limited Warranty

The mobile phone and software program developed by Sagem Communication (SAGEM) remains the exclusive property of Sagem. YOU ARE STRICTLY PROHIBITED FROM MODIFYING, TRANSLATING, DE-COMPILING OR DISASSEMBLING THIS SOFTWARE PROGRAM OR ANY PART THEREOF.

Brightstar US, Inc. (Brightstar) is the exclusive distributor for Sagem in the United States and is responsible for all warranties for SAGEM phones and accessories sold in the United States. Please DO NOT contact Sagem directly regarding any warranty claims; doing so will only delay the processing of your claim.

THE LIMITED WARRANTY AND REMEDIES SET FORTH IN THIS WARRANTY CARD ARE THE EXCLUSIVE WARRANTIES AND REMEDIES PROVIDED BY BRIGHTSTAR AND ARE IN LIEU OF ALL OTHER WARRANTIES, TERMS, OR CONDITIONS, EXPRESS OR IMPLIED, EITHER IN FACT OR BY OPERATION OF LAW. BRIGHTSTAR OR SAGEM MAKES NO OTHER WARRANTY, EXPRESS OR IMPLIED, AND EXPRESSLY DISCLAIMS ALL IMPLIED WARRANTIES, INCLUDING ALL WARRANTIES OF MERCHANTABILITY OR FITNESS FOR A PARTICULAR PURPOSE. THE REMEDIES SET FORTH HEREIN ARE YOUR EXCLUSIVE REMEDIES FOR BREACH OF WARRANTY.

Usage precautions

Your phone allows you to download ring tones, icons and animated screensavers. Some of these items may contain data that may cause malfunction of your phone or data losses (a computer virus, for example). For this reason, Brightstar disclaims all responsibility concerning (1) the reception of downloaded data or losses of such data, (2) such data's impact on the operation of the phone, and (3) damages resulting from receiving any downloaded data or loss of such data. In addition, any failure caused by receiving downloaded data that do not comply with the phone's specifications is excluded from the warranty. The diagnosis and repair of a phone infected by downloaded data will be at the expense of the customer.

Warranty conditions

Whenever you wish to make a warranty claim, please contact Brightstar at the address given below and present the purchasing paperwork that was given to you.

1. Brightstar warrants that the new phone (excluding consumablesbut including new accessories bundled with the phone), is free from defects in materials and workmanship under normal usage for a period of twelve (12) months effective from the date you purchased the phone, to be evidenced by presentation of the paperwork stating the purchase date of the phone. Phones that have been repaired or replaced as standard during the warranty period stated above are warranted (parts and labor) until the later of these two dates: Expiry of the original warranty period of twelve (12) months stated above; or three (3) months from the repair or replacement under warranty.

2. All faulty phones under warranty will be replaced or repaired free of charge at Brightstar’s option.

3. You are responsible for sending the phone to the repair center. In order to repair or replace a phone under warranty, Brightstar also requires that a legible and unmodified purchase document, stating vendor's name and address, date and place of purchase, type of phone and IMEI (to display the IMEI on your phone's screen, type: *#06#), be attached to the warranty, and that the information on the phone identification label be legible and that such label or any other seal have not been tampered with. The warranty applies under normal usage for the period outlined above. Prior to sending the phone for repair, it is your responsibility to backup at your expense any customized data stored in the phone (such as phonebook, settings, wallpapers, and previously downloaded data). BRIGHTSTAR IS NOT RESPONSIBLE FOR DAMAGE TO CUSTOMER FILES, PROGRAMS OR DATA. The information or operating elements and the contents of files will not be re-installed in any case in the event of loss. Brightstar may decide, at its option, to repair the phone with new or reconditioned parts, or replace the phone with a new phone or with a phone in good working condition. During its repair work Brightstar may make, where necessary, any technical modifications to the phone where these modifications do not adversely affect functionality. Faulty parts to be replaced during a repair under warranty become the property of Brightstar. The application of the warranty is subject to the full payment of the sums due for the phone when the request for support is made.

4. Breakdowns, damage or malfunctions due to the following are excluded from the limited warranty: (i) non-compliance with the installation and use instructions, (ii) an external cause (such as shock, lightning, fire, vandalism, malice, water damage of any type, contact with various liquids or any harmful agent, unsuitable electric current, extreme humidity or heat, improper storage, etc.), (iii) modifications of the phone made without the written consent of Brightstar, (iv) a servicing fault, as described in the documentation supplied with the phone, (v) lack of supervision or care, (vi) poor environmental conditions of the phone (including temperature and hygrometry, effects of variations in electric voltage, interference from the mains network or earth), (vii) repair, including opening or trying to open the phone or servicing done by personnel not approved by Brightstar, (viii) inadequate packaging and/or poor packing of the phone that is sent back to Brightstar, (ix) the use of products or accessories not sold by Brightstar as compatible with the phone, or (x) the opening or closing of a SIM Lock done without the agreement of the original operator.

5. In addition, the warranty does not cover: (i) normal wear and tear of the phone and accessories, (ii) change of parameters of the cellular network made after the phone was sold, (iii) supply of new software versions, (iv) delivery of consumables and installation or replacement of these consumables, (v) phone or software modified or added without the written consent of Brightstar, (vi) phones returned to Brightstar without having complied with the return procedure specific to the phone covered by this warranty, or (vii) communication problems linked with a poor environment, including problems accessing and/or logging onto the Internet, breakdowns of the access network, the failure of the subscriber's or his correspondent's line, transmission fault (such as poor geographic coverage by radio transmitters, interference, disturbance, failure or poor quality of phone lines, etc.), a fault inherent to the local network (such as cabling, file server, user phone) and/or transmission network fault (such as interference, disturbance, failure or poor quality of the network, etc.).

6. In the event a customer submits a product for repair or replacement and such product is excluded from warranty coverage or the warranty period has expired, Brightstar will draw up an estimate to be given to the customer for acceptance before any repair commences. The repair and freight costs (to and from the repair center) given in an estimate accepted by the customer will be charged to the customer.

7. Any questions or correspondence regarding this limited warranty should be addressed to:
Brightstar US, Inc.
Attn: SAGEM Warranty & Repair Services
1001 Technology Way
Libertyville, IL 60048

These provisions are valid unless Brightstar has made a special written agreement with the customer. If one of the provisions turns out to infringe a requirement under applicable law that consumers could have the benefit of under the national legislation, such provision will not be applied, but all other provisions will remain valid.

For customers outside the United States

Warranty

You must always use your phone for the purpose for which it was designed, under normal operating conditions. Sagem Communication declines all responsibility for any use outside of the scope of its designed purpose and for any consequences of this use.

The software program developed by SAGEM remains the exclusive property of Sagem Communication. It is therefore highly prohibited to modify, translate, de-compile or disassemble this software program or any part thereof.

Usage precautions

Your phone allows you to download ring tones, icons and animated screensavers. Some of these items may contain data that may cause malfunctions of your phone or data losses (virus for example).

For this reason, Sagem Communication rejects all responsibility concerning (1) the reception of downloaded data or losses of the said data, (2) the impact on the operation of the phone and (3) damages resulting from receiving the said downloaded data or loss of said data. In addition, Sagem Communication states that a failure caused by receiving downloaded data that do not comply with the specifications set by Sagem Communication is excluded from the warranty. Consequently, the diagnosis and repair of a phone infected by the said downloaded data will be at the expense of the customer.

Any content that you download to your phone may be protected by copyright belonging to third parties and consequently you may not have the right to use this content or its use may be restricted. Consequently it is up to you to ensure that you have permission, such as under the terms of a license agreement, to use any content that you download. Furthermore, Sagem Communication does not guarantee the accuracy nor the quality of any content that you download. You alone are responsible for the content that you download to your mobile phone and how you use it. Sagem Communication cannot be held responsible for this content nor for its use.

It is your responsibility to ensure compliance, at your own expense, with the laws and regulations applicable in the country where you use your phone.

Warranty conditions

Whenever you wish to make use of the warranty, please contact your vendor and present him with the purchasing paperwork that he gave you.
If a fault occurs, he will advise you.

1. The new phone (excluding consumables), including new accessories bundled with the phone, are guaranteed by Sagem Communication, parts and labour (apart from travel) against any manufacturing fault for a period of twelve (12) months with effect from the sale of the phone to the customer, on presentation of the paperwork stating the purchase date of the phone.

Phones that have been repaired or replaced as standard during the warranty period stated above are guaranteed (parts and labour) until the later of these two dates:

Expiry of the guarantee period of twelve (12) months stated above or three (3) months with effect from the date of support provided by Sagem Communication.

Your legal rights under the terms of applicable national law as well as your rights in relation to your retailer, as set out in the sales contract, remain applicable and are not in any way affected by this guarantee.

In any disputes, the phone is covered by the legal warranty against the consequences of faults or hidden defects in compliance with articles 1641 and subsequent of the French civil code.

2. All faulty phones under warranty will be replaced or repaired free of charge at Sagem Communication's option (with the exclusion of repair of any other damage), once it has been specified that the work required for the application of the warranty will be done in a workshop and that the return costs (transport and insurance) of the phone to the address to be indicated to it by the Sagem Communication after-sales service, whose phone number will appear on the delivery note, will be charged to the customer.

Subject to essential legal provisions, Sagem Communication does not accept any warranty, explicit or implicit, other than the warranty provided expressly in this chapter, nor shall Sagem Communication accept responsibility for any immaterial and/or indirect damages (such as loss of orders, loss of profit or any other financial or commercial damage) under the warranty or not

3. The acceptance of a phone under warranty demands that a purchase document that is legible and without modi-fication, stating vendor's name and address, date and place of purchase, type of phone and IMEI, are attached to the warranty, and that the information on the phone identification label is legible and that this label or any other seal has not been tampered with.

The warranty applies in normal conditions of use.

Prior to sending the phone for repair, it is the customer's responsibility to backup at his expense the customized data stored in the phone (phonebook, settings, wallpapers). A list of backup facilities can be provided by Sagem Communication on request. The responsibility of Sagem Communication cannot be invoked if damage occurs to customer files, programs or data. The information or operating elements and the contents of files will not be re-installed in any case in the event of loss.

Sagem Communication may decide, at its option, to repair the phone with new or reconditioned parts, replace the phone with a new phone or, in any dispute, a phone in good working condition. During its work Sagem Communication reserves the facility to make, where necessary, any technical modifications to the phone where these modifications doe not adversely affect its initial purpose.

Faulty parts to be replaced during a repair under warranty will become the property of Sagem Communication.

The phone repair and standstill time during the warranty period may not lead to an extension of the warranty period as stated in article 1 above, provided no other vital provisions have been agreed.

The application of the warranty is subject to the full payment of the sums due for the phone when the request for support is made.

4. The following are excluded from the warranty:
Breakdowns or malfunctions due to non-compliance with the installation and use instructions, to an external cause of the phone (shock, lightning, fire, vandalism, malice, water damage of any type, contact with various liquids or any harmful agent, unsuitable electric current...), to modifications of the phone made without the written consent of Sagem Communication, to a servicing fault, as described in the documentation supplied with the phone, to lack of supervision or care, to poor environmental conditions of the phone (especially temperature and hygrometry, effects of variations in electric voltage, interference from the mains network or earth) or even due to a repair, a call-out (opening or trying to open the phone) or to servicing done by personnel not approved by Sagem Communication.

Damage resulting from inadequate packaging and/or poor packing of the phone sent back to Sagem Communication.

Normal wear and tear of the phone and accessories.

Communication problems linked with a poor environment, especially:

Problems accessing and/or logging onto the Internet, such as breakdowns of the access network, the failure of the subscriber's or his correspondent's line, transmission fault (poor geographic coverage by radio transmitters, interference, disturbance, fai-lure or poor quality of phone lines...), a fault inherent to the local network (cabling, file server, user phone) and/or transmission network fault (interference, disturbance, failure or poor quality of the network...).

Change of parameters of the cellular network made after the phone was sold.

Supply of new software versions.

Current servicing work: delivery of consumables, installation or replacement of these consumables…

Call-outs for phone or software modified or added without the written consent of Sagem Communication.

Faults or disruptions resulting from the use of products or accessories not compatible with the phone.

Phones returned to Sagem Communication without having complied with the return procedure specific to the phone cove-red by this warranty.

The opening or closing of a SIM operator key and call-outs resulting in the non-operation of the phone resulting from the opening or closing of SIM operator key done without the agreement of the original operator.

5. In the cases of warranty exclusion and of expiry of the warranty period, Sagem Communication shall draw up an estimate to be given to the customer for acceptance before any call-out. The repair and carriage costs (there and back) given in the accepted estimate will be charged to the customer.

These provisions are valid unless a special written agreement has been made with the customer. If one of the provisions turns out to infringe a legally essential rule that consumers could have the benefit of under the national legislation, this provision will not be applied, but all other provisions will remain valid.

6. Any questions or correspondence regarding this limited warranty should be addressed to:
www.planetsagem.com.

End User Licence Agreement (EULA), for the software

CONTEXT AND ACCEPTATION OF THE AGREEMENT

You have acquired a Mobile Phone device ("DEVICE"), manufactured by Sagem Communication (SAGEM), that includes software either developed by SAGEM itself or licensed third party Software suppliers ("SOFTWARE COMPANIES") to SAGEM with the rights to sub-license it to the purchaser of the device. Those installed software products whatever their company of origin, and wherever the name of the company of origin is indicated of not in the DEVICE documentation, as well as associated media, printed materials, and "online" or electronic documentation ("SOFTWARE") are protected by United States and international intellectual property laws and treaties. The SOFTWARE is licensed, not sold. The owner of the Software expressly reserves all rights.

IF YOU DO NOT AGREE TO THIS END USER LICENSE AGREEMENT ("EULA"), DO NOT USE THE DEVICE OR COPY THE SOFTWARE. INSTEAD, PROMPTLY CONTACT SAGEM FOR INSTRUCTIONS ON RETURN OF THE UNUSED DEVICE(S) FOR A REFUND. ANY USE OF THE SOFTWARE, INCLUDING BUT NOT LIMITED TO USE ON THE DEVICE, WILL CONSTITUTE YOUR AGREEMENT TO THIS EULA (OR RATIFICATION OF ANY PREVIOUS CONSENT).

SOFTWARE includes software already installed on the DEVICE ("DEVICE Software") and Software contained on the CDROM disk ("Companion CD"), if any is supplied with the product.

GRANT OF SOFTWARE LICENCE

This EULA grants you the following licence:

DEVICE Software. You may use the DEVICE Software as installed on the DEVICE. All or certain portions of the DEVICE Software may be inoperable if you do not have and maintain a service account with an appropriate Mobile Operator, or if the Mobile Operator's network facilities are not operating or configured to operate with the DEVICE software.

COMPANION CD. If any is supplied, additional software for your personal computer is included with your DEVICE. You may install and use the software component(s) contained in the Companion CD only in accordance with the terms of the printed or online end user license agreement(s) provided with such component(s). In the absence of an end user license agreement for particular component(s) of the Companion CD, you may install and use only one (1) copy of such component(s) on the DEVICE or a single computer with which you use the DEVICE.

Security Updates. The SOFTWARE may include digital rights management technology. If SOFTWARE does contain digital rights management technology, content providers are using the digital rights management technology ("DRM") contained in the SOFTWARE to protect the integrity of their content ("Secure Content") so that their intellectual property, including copyright, in such content is not misappropriated. Owners of such Secure Content ("Secure Content Owners") may, from time to time, request manufacturers or SOFTWARE SUPPLIERS to provide security related updates to the DRM components of the SOFTWARE ("Security Updates") that may affect your ability to copy, display and/or play Secure Content through the SOFTWARE or third party applications that utilise the DRM.

You therefore agree that, if you elect to download a licence from the Internet that enables your use of Secure Content, Suppliers may, in conjunction with such licence, also download onto your DEVICE such Security Updates that a Secure Content Owner has requested that SOFTWARE SUPPLIERS distribute. SAGEM and SOFTWARE SUPPLIERS will NOT retrieve any personally identifiable information, or any other information, from your DEVICE by downloading such Security Updates.

DESCRIPTION OF OTHER RIGHTS AND LIMITATIONS COPYRIGHT.

All title and intellectual property rights in and to the SOFTWARE (including but not limited to any images, photographs, animations, video, audio, music, text and "applets," incorporated into the SOFTWARE), the accompanying printed materials, and any copies of the SOFTWARE, are owned by SAGEM or the SOFTWARE SUPPLIERS. You may NOT copy the printed materials accompanying the SOFTWARE. All title and intellectual property rights in and to the content which may be accessed through use of the SOFTWARE is the property of the respective content owner and may be protected by applicable copyright or other intellectual property laws and treaties. THIS EULA GRANTS YOU NO RIGHTS TO USE SUCH CONTENT. All rights not specifically granted under this EULA are reserved by SAGEM and the SOFTWARE SUPPLIERS.

Limitations on Reverse Engineering, Decompilation and Disassembly. You may not reverse engineer, decompile, or disassemble the SOFTWARE.

Single DEVICE. The DEVICE Software is licensed with the DEVICE as a single integrated product. The DEVICE Software installed in the memory of the DEVICE may only be used as part of the DEVICE.

Single EULA. The package for the DEVICE may contain multiple versions of this EULA, such as multiple translations and/or multiple media versions (e.g., in the user documentation and in the software). Even if you receive multiple versions of the EULA, you are licensed to use only one (1) copy of the DEVICE Software.

Software Transfer. You may NOT transfer any of your rights under this EULA with regard to the DEVICE Software or Companion CD, except as permitted by the applicable Mobile Operator. In the event that the Mobile Operator permits such transfer, you may transfer all of your rights under this EULA only as part of a sale or transfer of the DEVICE, provided you retain no copies, you transfer all of the SOFTWARE (including all component parts, the media and printed materials, any upgrades , this EULA and, if applicable, the Certificate(s) of Authenticity), and the recipient agrees to the terms of this EULA. If the SOFTWARE is an upgrade, any transfer must include all prior versions of the SOFTWARE.

Software Rental. You may not rent or lease the SOFTWARE.

Speech/Handwriting Recognition. If the SOFTWARE includes speech and/or handwriting recognition component(s), you should understand that speech and handwriting recognition are inherently statistical processes; that recognition errors are inherent in the processes; and that errors can occur in the component's recognition of your handwriting or speech, and the final conversion into text. Neither SAGEM nor its suppliers shall be liable for any damages arising out of errors in the speech and handwriting recognition processes.

NOTICE REGARDING THE MPEG-4 VISUAL STANDARD. The SOFTWARE may include MPEG-4 visual decoding technology. MPEG LA, L.L.C. requires the following notice:

USE OF THIS SOFTWARE IN ANY MANNER THAT COMPLIES WITH THE MPEG-4 VISUAL STANDARD IS PROHIBITED, EXCEPT FOR USE DIRECTLY RELATED TO (A) DATA OR INFORMATION (i) GENERATED BY AND OBTAINED WITHOUT CHARGE FROM A CONSUMER NOT THEREBY ENGAGED IN A BUSINESS ENTERPRISE, AND (ii) FOR PERSONAL USE ONLY; AND (B) OTHER USES SPECIFICALLY AND SEPARATELY LICENSED BY MPEG LA, L.L.C.

If you have questions regarding this Notice, please contact MPEG LA, L.L.C., 250 Steele Street, Suite 300, Denver, Colorado 80206; Telephone 303 331.1880; FAX 303 331.1879.

Termination. Without prejudice to any other rights, SAGEM may terminate this EULA if you fail to comply with the terms and conditions of this EULA. In such event, you must destroy all copies of the SOFTWARE and all of its component parts.

Consent to Use of Data. You agree that SOFTWARE SUPPLIERS may collect and use technical information gathered in any manner as part of product support services related to the SOFTWARE. SOFTWARE SUPPLIERS may use this information solely to improve their products or to provide customised services or technologies to you. SOFTWARE SUPPLIERS may disclose this information to others, but only in a form that does not personally identifies you.

Internet Gaming/Update Features. If the SOFTWARE provides, and you choose to utilize, the Internet gaming or update features within the SOFTWARE, it is necessary to use certain computer system, hardware, and software information to implement the features. By using these features, you explicitly authorise SOFTWARE SUPPLIERS to use this information solely to improve their products or to provide customized services or technologies to you. SOFTWARE SUPPLIERS may disclose this information to others, but only in a form that does not personally identifies you.

Internet-Based Services Components. The SOFTWARE may contain components that enable and facilitate the use of certain Internet-based services. You acknowledge and agree that SOFTWARE SUPPLIERS may automatically check the version of the SOFTWARE and/or its components that you are utilising and may provide upgrades or supplements to the SOFTWARE that may be automatically downloaded to your Device.

Links to Third Party Sites. The SOFTWARE may provide you with the ability to link to third party sites through the use of the SOFTWARE. The third party sites are not under the control of SAGEM. Neither SAGEM nor its affiliates are responsible for (i) the contents of any third party sites, any links contained in third party sites, or any changes or updates to third party sites, or (ii) webcasting or any other form of transmission received from any third party sites. If the SOFTWARE provides links to third party sites, those links are provided to you only as a convenience, and the inclusion of any link does not imply an endorsement of the third party site by SAGEM or its affiliates.

Additional Software/Services. The SOFTWARE may permit SAGEM to provide or make available to you SOFTWARE updates, supplements, add-on components, or Internet-based services components of the SOFTWARE after the date you obtain your initial copy of the SOFTWARE ("Supplemental Components").

If SAGEM provides or makes available to you Supplemental Components and no other EULA terms are provided along with the Supplemental Components, then the terms of this EULA shall apply.

SAGEM reserves the right to discontinue any Internet-based services provided to you or made available to you through the use of the SOFTWARE.

EXPORT RESTRICTIONS. You acknowledge that SOFTWARE is subject to U.S. export jurisdiction. You agree to comply with all applicable international and national laws that apply to the SOFTWARE, including the U.S. Export Administration Regulations, as well as end-user, end-use and destination restrictions issued by U.S. and other governments.

UPGRADES AND RECOVERY MEDIA

- DEVICE Software. If the DEVICE Software is provided by SAGEM separate from the DEVICE on media such as a ROM chip, CD ROM disk(s) or via web download or other means, and is labeled "For Upgrade Purposes Only", you may install one copy of such DEVICE Software onto the DEVICE as a replacement copy for the existing DEVICE Software and use it in accordance with this EULA, including any additional EULA terms accompanying the upgrade DEVICE Software.
- COMPANION CD. If any Companion CD component(s) is provided by SAGEM separate from the DEVICE on CD ROM disk(s) or via web download or other means, and labelled "For Upgrade Purposes Only" , you may (i) install and use one copy of such component(s) on the computer(s) you use to exchange data with the DEVICE as a replacement copy for the existing Companion CD component(s).

RESPONSIBILITIES

SUPPORT AND INFORMATION Should you have any questions concerning this EULA, or if you desire to contact SAGEM for any other reason, please refer to the address provided in the documentation for the DEVICE.

SAGEM SHALL HAVE NO LIABILITY FOR ANY INDIRECT, SPECIAL, CONSEQUENTIAL OR INCIDENTAL DAMAGES ARISING FROM OR IN CONNECTION WITH THE USE OR PERFORMANCE OF THE SOFTWARE. THIS LIMITATION SHALL APPLY EVEN IF ANY REMEDY FAILS OF ITS ESSENTIAL PURPOSE.

FOR APPLICABLE LIMITED WARRANTIES AND SPECIAL PROVISIONS PERTAINING TO YOUR PARTICULAR JURISDICTION, PLEASE REFER TO YOUR WARRANTY BOOKLET INCLUDED WITH THIS PACKAGE OR PROVIDED WITH THE SOFTWARE PRINTED MATERIALS.

Java™

You are the owner of a SAGEM mobile phone that gives you the ability to download applications and games to be executed on your phone thanks to the built-in Java™ engine.

However, receiving applications from everywhere implies some basic knowledge of the possible effects of such download.

Thank you for spending a few minutes reading these pages: this will prevent you from doing something that may cause you unexpected consequences.

WARNING: *When running a Java™ application, you may be prompted to grant access to protected features. These features are protected because using them could incur you cost, or involve your personal data. Read the security popup message carefully, to understand what feature is requested, and decide whether it is legitimate for the application to perform it. In case of doubt, don't hesitate to refuse access by selecting the "No" button! The security configuration menu is an expert feature! You must know exactly what you are doing before attempting to change security parameters of a MIDlet. Misunderstanding changes may render MIDlet non functional and/or lead to higher risks for your private data or impact your airtime consumption. Any changes in the security configuration are done under your responsibility. In no case shall Sagem Communication and/or your network provider be liable for any damages deriving from or arising out of such changes in the security configuration.*

You must be aware that applications downloaded to your phone could cause the phone to perform actions for which you will be billed, like making calls and sending SMS. Depending on your operator's billing policy, you may also be charged to download the application because of airtime consumption.

Security considerations

Java™ MIDP technology is an efficient way to provide powerful applications in mobile phones. It allows use, by "over the air" downloaded applications or games, of the great features built-in in a mobile phone (SMS sending and receiving, multimedia playback and recording, network access…).

All these MIDP 2.0 features cannot be simply exposed to any MIDlet installed in the handset: a careful access control system is implemented in the device to protect your private data and airtime consumption.

Access controls are gathered in 9 security groups:

- Network access (GPRS/GSM data airtime consumption, HTTP/web connections…)
- Auto invocation (MIDlet can wake up at a given time or when receiving a SMS)
- Phone call (ability to initiate a phone call)
- Local connectivity (IrDA or serial interfaces use by the MIDlet)

- Messaging receive (SMS,SMS-CB interception by a MIDlet)
- Messaging sending (SMS sending by a MIDlet)
- Read User data (Subscriber identity, Phonebook, Agenda read access from a MIDlet)
- Write User data (New phonebook or agenda entry)
- Multimedia recording (ability to control camera or microphone from a MIDlet)

According to the security status of an installed MIDlet (see below), each of these security groups has one among 5 possible authorizations levels (listed from the more restrictive to the more permissive):

- Never
  The security group completely prevents access to the protected features.
- Per use
  Each time MIDlet tries to use protected feature, user is prompted to grant access.
- Per session
  First time a MIDlet uses a protected function, user is prompted to grant access like in "Per use" authorization but access is granted until the MIDlet terminates.
- Single confirmation
  The first time in the whole MIDlet life a MIDlet uses a protected feature, user is prompted to grant access. It remains valid until the MIDlet is removed from the handset.
- Always
  The security group unconditionally grants access to protected features.

A MIDlet has a security status which is either "uncertified", or else "certified".

An "uncertified" status means that the source of the MIDlet could not be verified by the mobile phone at installation time. As far as the phone knows, the MIDlet could have been written by anyone.

A "certified" status means that the MIDlet was digitally signed by a known party, whose name is displayed by the mobile phone. This means that the mobile phone successfully authenticated the named party as the source of the MIDlet.

Security permissions are different for "uncertified" or "certified" MIDlets, and may be different for different sorts of named parties. Usually "uncertified" security permisions are more restrictive than "certified" ones.

Security configuration menu

When a MIDlet is installed in the mobile phone, default security authorizations are applied.

This default security configuration may be altered through the "Settings/Security" menu of an installed MIDlet.

Once in the "Security" menu, the security status of the MIDlet is displayed (see "Security considerations" paragraph above).

If you do not want to enter the security menu, simply select "Back" button.

You can proceed by selecting "Ok" button.

The menu displayed allows you to increase or decrease permissions currently applied to the current MIDlet for each of the security groups.

When you set a more permissive authorization to a security group than the current value, mobile phone asks you to confirm your increased risk exposure.

The maximum risk exposure increase is limited by the security status. Depending of the manufacturing configuration, it means, for example, that "Net Access" security group authorization cannot be set to a permissive value higher that "Session" for an "uncertified" MIDlet ("Single confirmation" and "Always" are unavailable in the security configuration menu) but an operator "certified" MIDlet may have all permission values available without any limitations.

What is Java™?

Java™ is a new technology enabling use of powerful applications in the mobile phone area. Business applications and games are easily downloadable by the end-user on a Java™ featured handset.

Your mobile phone is a MIDP 2.0 compliant Java™ platform which implements WMA (SMS support) and MMAPI (Multimedia support) options, providing an exciting environment to run highly graphical, networked and intuitive MIDP applications.

Such applications may be, for example, a wide range of games and appealing applications like action and logic games, agenda, e-Mail reader, Web browser…

What is a MIDlet?

A Java™ application or a game designed to run in a mobile phone is named a MIDlet (MIDP applet).

A MIDlet is usually made of 2 files:

- The JAD file
- The JAR file

JAD file stands for **J**ava™ **A**pplication **D**escriptor. It is a small file describing the content of a JAR file (version, vendor name, size…) and displayed by the mobile phone. **JAD file size is usually less than 2 kilo-bytes large.**

JAR file stands for Java™ Archive. It refers to the application data themselves (program, images, sound). **A JAR file may be up to 200 kilo-bytes large.**

Note: In rare circumstances, MIDlet vendors may provide no JAD file and the MIDlet is the JAR file alone. In such a case it is your only responsibility to evaluate the risk to download the JAR file without possibility of consulting the JAD file.

Downloading a MIDlet (Java™ game or application)

MIDlets are easily downloaded in the mobile phone through the Games or Applications menus or through the WAP browser.

In almost all cases, you will first receive a JAD file which will be displayed on the screen.

Much care must be given in examining the content of the file as explained further.

When you select a JAD file, your mobile phone downloads it, displays data contained and prompts you to acknowledge the JAR file download.

The popup displays information below:

- Name of the MIDlet
- Version
- Size (JAR file size)
- Vendor name
- Security status (**IMPORTANT:** see "Security considerations" paragraph below)
- JAR file URL.

If you do not want to download the main data (JAR file), you shall refuse to acknowledge further airtime consumption by selecting "Cancel" (JAR file is not downloaded).

If you agree on the MIDlet installation, just select "Ok". The MIDlet is installed with security levels set to default values associated with its security status.

Before downloading an application, such a message may appear: "Your handset cannot identify the application, please be sure of the source of the application before installing the application".

You shall read carefully the next two paragraphs to fully understand Java™ MIDP security concerns.

Trademarks

Java™ and all other Java-based marks are trademarks or registered trademarks of Sun Microsystems, Inc. in the U.S. and other countries.

Disclaimer

As explained above, some downloaded items may contain data or may induce actions which may cause malfunctioning of your mobile phone or loss or corruption of data or abnormal increase of your airtime consumption.

YOU EXPRESSLY ACKNOWLEDGE THAT THE DOWNLOAD OF ANY APPLICATIONS INCLUDING JAVA APPLICATIONS OR GAMES IS DONE UNDER YOUR EXCLUSIVE RESPONSIBILITY. IN NO EVENT SHALL SAGEM COMMUNICATION, YOUR NETWORK SERVICE PROVIDER OR THEIR AFFILIATES BE LIABLE FOR ANY LOST PROFITS OR COSTS OF PROCUREMENT OF SUBSTITUTE GOODS OR SERVICES, LOSS OF PROFITS, INTERRUPTION OF BUSINESS, LOSS OF DATA OR FOR ANY SPECIAL, INDIRECT, INCIDENTAL, ECONOMIC, OR CONSEQUENTIAL DAMAGES ARISING UNDER CONTRACT, TORT, NEGLIGENCE, OR OTHER THEORY OF LIABILITY RELATING TO THE DOWNLOAD OF ANY APPLICATION BY ANY MEANS, INCLUDING JAVA APPLICATIONS OR GAMES IN SAGEM COMMUNICATION DEVICES. YOU EXPRESSLY ACKNOWLEDGE THAT ANY APPLICATIONS INCLUDING JAVA APPLICATIONS OR GAMES ARE PROVIDED STRICTLY "AS IS". SAGEM COMMUNICATION AND/OR YOUR NETWORK SERVICE PROVIDER EXTEND NO WARRANTY WHATSOEVER THERETO. SAGEM COMMUNICATION AND/OR YOUR NETWORK SERVICE PROVIDER DISCLAIM ANY EXPRESS, IMPLIED OR STATUTORY WARRANTY OF MERCHANTABILITY, FITNESS OF ANY APPLICATIONS INCLUDING JAVA APPLICATIONS OR GAMES FOR A SPECIFIC PURPOSE, SATISFACTORY QUALITY, SECURITY OR OTHERWISE.

Troubleshooting

The phone won’t start and/or won’t take a charge

The battery has completely lost its charge.

Connect the phone to the charger for between 5 and 30 minutes. The phone will only switch on after it has been charging for a few minutes.

You may use the phone again when the Start option is displayed on the screen.

If the phone still won't start after 30 minutes’ charging, contact customer service.

SIM not present

Check if the SIM card is present and properly positioned / inserted.

Check the condition of the SIM card. If damaged, please go back to the operator's shop for advice. Contact your after-sales service if the message persists.

Incorrect PIN code

An incorrect PIN code has been entered. Be careful! Three incorrect PIN codes will block the SIM Card.

SIM BLOCKED

If a wrong PIN number is entered three times in succession, your SIM card is blocked. You must then:

- Enter the PUK (Personal Unblocking Key) code provided by your operator, and validate.
- Enter your PIN number and validate.
- Enter your PIN number again and validate.

After 5 or 10 failed attempts (depending on the type of SIM card), the SIM card is definitely locked. You must then contact your operator to obtain a new card.

SIM LOCKED

In certain cases, the handset can only be used with some types of SIM cards. This message means that the SIM card you are using does not fit with the phone. Take the SIM card out, and switch it back on. If the message **SIM not present** appears on the screen, you will need to check its compatibility next to the place where you bought it. If not, please contact your after-sales service.

No call connection

Check that the number you have dialled is correct.
If the letter R is displayed on the top right corner of the screen, without any network name displayed, only emergency services can be called.
Check the status of your credit.
Check that the SIM Card you are using offers the service you are requesting; check if its validity has not expired.
Check and deactivate the outgoing calls restriction when necessary.
The network could be saturated. Try later.
If the problem persists, please contact your Technical Helpdesk.

No receiving calls

Try to make a call in order to check that the phone and the network are operational.
Check and deactivate the permanent call forwarding (permanent call forwarding icon displayed on the screen).
Check and deactivate the incoming calls restriction when necessary.
If the problem persists, please contact your Technical Helpdesk.

Quality reception when calling

Avoid placing your fingers on the top of the phone, where the aerial is integrated: the phone will have to use full strength to establish a quality transmission.

Impossible to send message

Check that the message centre number is correctly entered.
To do so, please select the menu **Messages**, select **Options**, select **MSG centre n°** and check the number entered. Please contact your network provider to get this number.

No voicemail

Check that your subscription does offer this service.
Program the call to be forwarded to voicemail using the information provided by the operator.
Try to make a call to check that phone and network are operational.
Check if the voicemail number is properly configured. To do so, go to the **Settings**/**Calls** menu, select **Voicemail** and check the number. Otherwise, enter your operator's voicemail number.

Operator name does not appear on screen

Go into the **Settings** menu, select **Networks**, then [**Select**]. Wait until the operator appears, select it and validate.
If the Operator logo is present (depending on model), activate the display (**Settings**/**Operator logo**).

How can I increase the efficiency of my phone?

Activate the eco mode (see **Settings**/**Energy saving**).

Index

A

Activating your phone 11
Alarm 32
Anonymous mode 38

B

Battery
- Charging the battery 15
- Installing the battery 8

Beeps 35
Bluetooth 24, 44
Business card 18

C

Calculator 32
Calendar 34
Call barring 41
Calls 13
Calls (menu)
- Automatic redial 39
- Call forward 38
- Call waiting 39
- Counters 38
- Display number 38
- View last calls 38

Camera 24, 42
Car kit 45
Confidentiality 41
Connectivity 44
Contact 16, 25
- Call 16
- Delete 18
- Mailing list 18
- Modify 17

Contacts 12, 44
Converter 32
Cost 42
Currencies 33

D

Date / Time 36
Display 36
Downloaded objects 27

E

Energy saving 37

F

Fixed dialling 42

G

Games 31
Getting started 11
GPRS 30

H

Hands-free mode 13
Help 43

I

Icon 10
Idle screen 10
Input modes 20

L

Languages 35
Local information 23

M

Memory 22
Messages

Compose SMS 19
Drafts 22
Inbox 21
Outbox 21
Receiving messages 21
Templates 22
MMS 24
Multimedia 27
Multimedia objects 27
Music player 28

N

Navigator 6
Network 12
Networks 40

O

Operator 41
Operator logo 37
Organiser 44

P

Phone code 41
Phonebook
Memory 17
New contact 16
Using the phonebook 16
Photo 24, 42, 44
Picture 44
PIN number 40
PIN2 number 40

R

Ring tones 35

S

Safety information 54
Screensaver 37
Security 40
Sentbox 21
Serial cable 44
Serial speed 44
Shortcut keys 43
Silent mode 35
SIM card 8, 11
SMS 19
Sound 44

T

T9 20
Timer 32
To Do 44
ToDo 33
Troubleshooting 74, 75

U

USB cable 44

V

Vibrate 35
Video 26, 43, 44
Voicemail 39

W

WAP 29, 30
Downloading objects 29
WAP logging off 30
WAP logging on 29
WAP settings 42
Warranty 59, 62

2527555577

Sagem Communication
SAFRAN Group

Mobile Communication Business Group

www.sagem.com/mobiles
Le Ponant de Paris - 27, rue Leblanc - 75512 PARIS CEDEX 15 - FRANCE
Société Anonyme
Capital 300 272 000 € - 480 108 158 RCS PARIS

06/2006