Block Diagram

FCC ID: M9MRFID1356I100
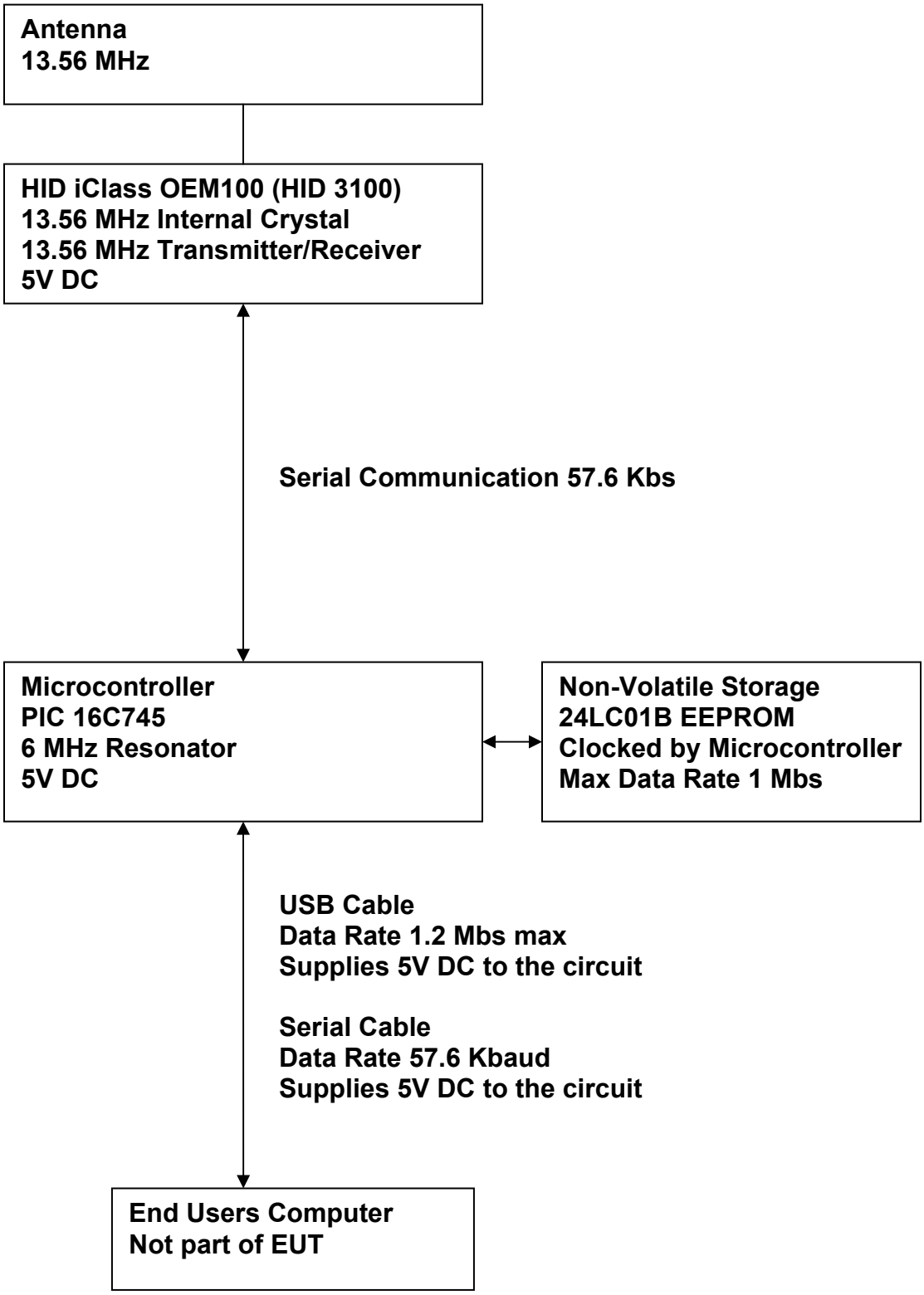
RF IDeas, Inc
FCC ID: M9MRFID1356I100
Block Diagram