F1DQ3007

Datasheet

Confidential / Preliminary Documentation

Revision 1.6

www.F1-media.com
sales@f1-media.com

List of Contents

1. General
   1.1 Overview
   1.2 Features
   1.3 Application
   1.4 Pinout Diagram
   1.5 Device Terminal Functions
   1.6 Module Dimension

2. Characteristics
   2.1 Electrical Characteristics
   2.2 RF Characteristics
   2.3 Audio Characteristics
   2.4 ESD Protection

3. Interface
   3.1 UART interface
   3.2 USB interface
   3.3 Programming and debug interface
   3.4 I2C interface
   3.5 LED drivers
   3.6 Audio interfaces
   3.7 Battery Charger
   3.8 Reset, RST#

4. Application Schematic
5. Antenna Spec
6. Module Placement Rule
7. PCB Layout
8. Reflow Temperature Profile
9. Packing Information
10. Revision History

1. General

1.1 Overview

This specification covers Bluetooth module (class-1) which complies with Bluetooth specification version 5.0 and integrates RF & Baseband controller in small package. This Module has deployed Qualcomm's QCC3007 chipset.

F1DQ3007_Rev1.0 Block Diagram

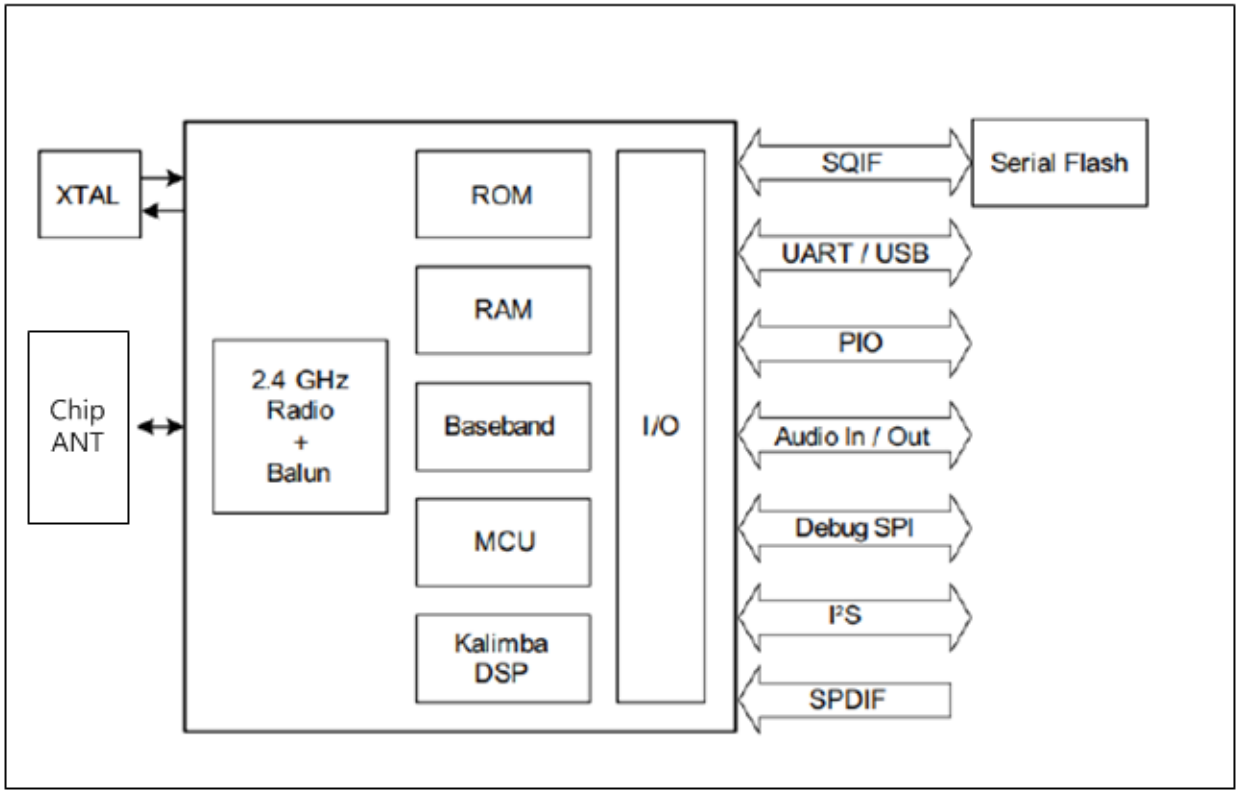

1.2 Features

• Bluetooth supports

. Bluetooth 5.0 specification compliant

. RF performance of 9dbm Transmitter power

. -92dBm Basic rate Receiver sensitivity.(QCC3007 Chipset only)

. Internal Chip Antenna

• Kalimba DSP

. Qualcomm Kalimba DSP (80MIPS)

• Audio Interface

. Dual I2S and PCM

. SPDIF

. Analog and Digital microphone

• Physical interfaces

. UART/USB(2.0)

. 14 general PIO

. 2 x PCM/I2S

. 1 SPDIF interfaces

. 3 LED drivers

• Memory

. On-chip Rom,

. 56KB system MCU Ram, External 32M bit Serial Quad I/O Flash

• Battery Charger

. Lithium ion/Lithium polymer battery charger

. Support USB charger detection

• Improved Audio Quality

. CVC noise cancel support

. SBC and ACC audio codec

. Stereo Codec

1.3 Application

• Speaker phones

• Wireless stereo speakers

1.4 Pinout Diagram

Top view

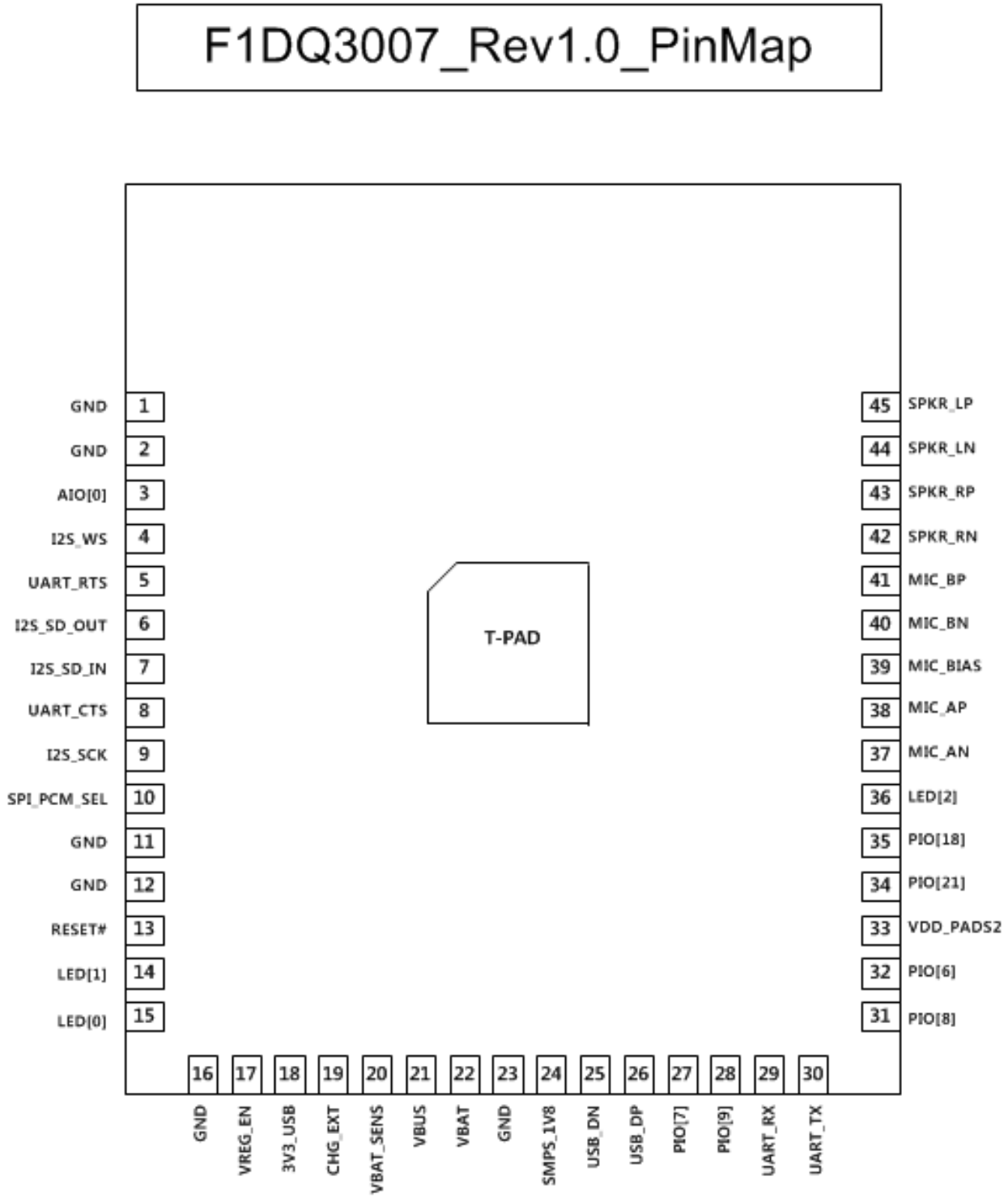

1.5 Device Terminal Functions

Pad	Pin Name	Pin Description
1	GND	GROUND
2	GND	GROUND
3	AIO[0]	Analog programmable input line 0.
4	I2S1_WS	Alternative function: ■PIO[4] ■SPI_CS#
5	UART_RTS	Alternative function: ■PIO[16]
6	I2S1_SD_OUT	Alternative function: ■PIO[3] ■SPI_MISO
7	I2S1_SD_IN	Alternative function: ■PIO[2] ■SPI_MOSI ■SPDIF_IN
8	UART_CTS	Alternative function: ■PIO[17]
9	I2S1_SCK	Alternative function: ■PIO[5 ■/SPI_CLK
10	SPI_PCM#	SPI/I²S select input: ■ 0 = I²S/PIO interface ■ 1 = SPI
11	GND	GROUND
12	GND	GROUND
13	RESET#	Reset if low. Pull low for minimum 5 ms to cause a reset.
14	LED[1]	Open-drain output
15	LED[0]	Open-drain output
16	GND	GROUND
17	VREG_EN	Regulator enable and multifunction button.
18	3V3_USB	3.3V bypass linear regulator output.
19	CHG_EXT	External battery charger transistor base control when using external charger boost.
20	VBAT_SENSE	Battery charger sense input.
21	VBUS	Charger input.
22	VBAT	Battery positive terminal.
23	GND	GROUND
24	SMPS_1V8	SMPS 1V8 OUT
25	USB_DN	USB data minus
26	USB_DP	USB data plus with selectable internal 1.5 kΩ pull-up resistor
27	PIO[7]	Alternative function:■I2S2_WS
28	PIO[9]	Alternative function:■UART_CTS ■ I2S2_SCK
29	UART_RX	Alternative function:■ PIO[0]
30	UART_TX	Alternative function:■ PIO[1]

31	PIO[8]	Alternative function: ■UART_RTS ■I2S2_SD_IN
32	PIO[6]	Alternative function: ■I2S2_SD_OUT
33	VDD_PADS2	Positive supply input for input/output ports.
34	PIO[21]	Programmable input/output
35	PIO[18]	Programmable input/output
36	LED[2]	Open-drain output
37	MIC_AN	Line or microphone input negative, channel A
38	MIC_AP	Line or microphone input positive, channel A
39	MIC_BIAS	Microphone bias
40	MIC_BN	Line input negative, channel B
41	MIC_BP	Line input positive, channel B
42	SPKR_RN	Speaker output negative, right
43	SPKR_RP	Speaker output positive, right
44	SPKR_LN	Speaker output negative, left
45	SPKR_LP	Speaker output positive, left
	T-PAD	GROUND

1.5.1 Programmable I/O ports(PIO)

F1DQ3007 provides up to 14 lines of programmable bidirectional I/O, PIO[21,18:16,9:0]

Table 1.6 Alternative PIO functions

PIO	Function				
	Debug SPI	UART	I2C	I2S	SPDIF
PIO[0]		UART_RX	AMP_I2C_SCL (Default)		
PIO[1]		UART_TX	AMP_I2C_SDA (Default)		
PIO[2]	SPI_MOSI			I2S1_SD_IN	SPDIF_IN
PIO[3]	SPI_MISO			I2S1_SD_OUT	
PIO[4]	SPI_CS#			I2S1_WS	
PIO[5]	SPI_CLK			I2S1_SCK	
PIO[6]				I2S2_SD_OUT	
PIO[7]				I2S2_WS	
PIO[8]		UART_RTS		I2S2_SD_IN: I2S2 synchronous data input	
PIO[9]		UART_CTS		I2S2_SD_IN	
PIO[16]		UART_RTS			
PIO[17]		UART_CTS			
PIO[18]					
PIO[21]					

1.6 Module Dimension

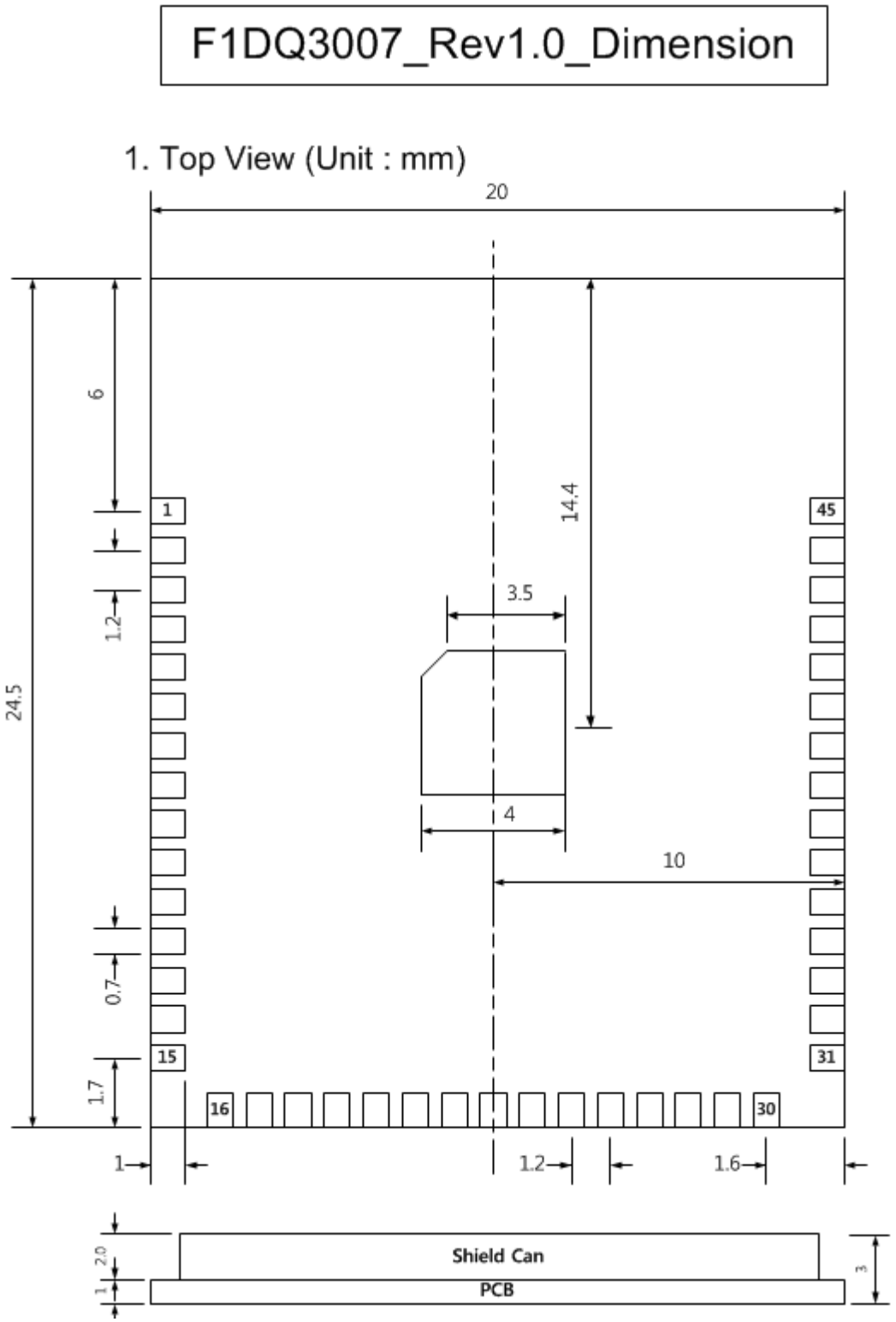

2. Characteristics

2.1.1 Electrical Characteristics

Absolute maximum ratings				
Rating		Min	Max	Unit
Storage temperature		-40	105	℃
Supply voltage				
5V	VBUS	-0.4	6.50	V
3.3V	SMP_BYP	-0.4	3.60	V
	VDD_USB	-0.4	3.60	V
Battery	LED[2:0]	-0.4	4.40	V
	SMP_BAT	-0.4	4.40	V
	VBAT_SENSE	-0.4	4.40	V
	VREGENABLE	-0.4	4.40	V
PIO	VDD_PADS1	-0.4	3.60	V
	VDD_PADS2	-0.4	3.60	V
1.8V	SMPS_1V8	-0.4	1.95	V
1.35V	SMPS_1V35	-0.4	1.45	V
Other Teminal Voltage		VSS -0.4	VDD +0.4	V

Recommended operating conditions					
Rateing		Min	Typ	Max	Unit
Operating Temperature range		-20	20	75	℃
5V	VCHG, 4.20V float setting	4.75	5.00	6.50	V
	VCHG, 4.35V float setting	4.90		6.50	V
3.3V	SMP_BYP	3.10	3.30	3.60	V
	VDD_USB	3.10	3.30	3.60	V
Battery	LED[2:0]	-	3.70	4.40	V
	SMP_BAT	2.50	3.70	4.40	V
	VBAT_SENSE	0.00	3.70	4.60	V
	VREGENABLE	0.00	3.70	4.40	V
PIO	VDD_PADS1	1.70	1.80	3.60	V
	VDD_PADS2	1.70	1.80	3.60	V
1.8V	SMPS_1V8	1.70	1.80	1.95	V
1.35V	SMPS_1V35	1.30	1.35	1.45	V

2.1.2 Power consumption

DUT role	Connection		Packet type	Average current	Unit
N/A	Deep sleep	With UART host connection	–	63	µA
N/A	Page scan	Page = 1280 ms interval Window = 11.25 ms	–	243	µA
N/A	Inquiry and page scan	Inquiry = 1280 ms interval Page = 1280 ms interval Window = 11.25 ms	–	441	µA
Master	ACL	No traffic	DH1	4.89	mA
Master	ACL	File transfer	DH1	7.21	mA
Master	ACL	Sniff = 500 ms, 1 attempt, 0 timeout	DH1	150	µA
Master	ACL	Sniff = 1280 ms, 8 attempts, 1 timeout	DH1	126	µA
Master	SCO	Sniff = 100 ms, 1 attempt, PCM	HV3	9.37	mA
Master	SCO	Sniff = 100 ms, 1 attempt, mono audio codec	HV3	11.69	mA
Master	eSCO	Setting S3, sniff = 100 ms, PCM	2EV3	7.5	mA
Master	eSCO	Setting S3, sniff = 100 ms, PCM	3EV3	7.13	mA
Master	eSCO	Setting S3, sniff = 100 ms, codec	2EV3	9.81	mA
Master	eSCO	Setting S3, sniff = 100 ms, codec	3EV3	9.44	mA
Slave	ACL	No traffic	DH1	7.88	mA
Slave	ACL	File transfer	DH1	8.89	mA
Slave	ACL	Sniff = 500 ms, 1 attempt, 0 timeout	DH1	162	µA
Slave	ACL	Sniff = 1280 ms, 8 attempts, 1 timeout	DH1	169	µA
Slave	SCO	Sniff = 100 ms, 1 attempt, PCM	HV3	9.71	mA
Slave	SCO	Sniff = 100 ms, 1 attempt, mono audio codec	HV3	12.06	mA
Slave	eSCO	Setting S3, sniff = 100 ms, PCM	2EV3	7.98	mA
Slave	eSCO	Setting S3, sniff = 100 ms, PCM	3EV3	7.62	mA
Slave	eSCO	Setting S3, sniff = 100 ms, codec	2EV3	10.3	mA
Slave	eSCO	etting S3, sniff = 100 ms, codec	3EV3	9.94	mA
Master	Bluetooth low energy	Connected, 500 ms interval	–	176	µA
Slave	Bluetooth low energy	Connected, 500 ms interval	–	163	µA
N/A	Bluetooth low energy	Non-connectable, 1.28 s, 15 octet, 3 channels	–	99	µA
N/A	Bluetooth low energy	Discoverable, 1.28 s, 15 octet, 3 channels	–	108	µA
N/A	Bluetooth low energy	Connectable, 1.28 s, 15 octet, 3 channels		110	µA
N/A	Bluetooth low energy	Scanning 1.28 s, 11.25 ms, single frequency		255	µA

2.2 RF Characteristics

2.2.1 BR/EDR

Transmitter

Items			min.	Typ.	Max.	Unit
Output Power		BR(Normal Condition	3	7	-	dBm
-20 dB bandwidth				925	1000	KHz
modulationCharacteristics		Δf1avg maximum	140	164	175	KHz
		Δf2max minimum	115	140	-	KHz
		Δf2avg/Δf1avg	0.8	0.9	-	-
ICFT			-75	10	75	KHz
Carrier Frequecy Drift		1 Slot	-	10	25	KHz
		5 Slot	-	11	40	KHz
Spurious Emissions		2nd harmonic	-	-27	-	dBm
		3rd harmonic	-	-26	-	dBm
EDR Relative Power			-4	-1	1	dB
EDR carrier frequency stability & modulation accuracy	π/4 DQPSK & 8DPSK	| ωi|		1	10	KHz
		| ωo|		2	75	KHz
		| ωo+ ωi|		3	75	KHz
	π/4 DQPSK	RMS DEVM		7	20	%
		99% DEVM		12	30	%
		Peak DEVM		18	35	%
	8DPSK	RMS DEVM		6	13	%
		99% DEVM		12	20	%
		Peak DEVM		17	25	%

Receiver

Items		min.	Typ.	Max.	Unit
Sensitivity (BER ≤ 0.1%)			-85	-78	dBm
EDR Sensitivity (BER ≤ 0.1%)	8DPSK		-75	-71	dBm
Maximum Input Level		-20			dBm

2.2.2 LE

Transmitter

Items		min.	Typ.	Max.	Unit
Output Power	Normal Condition	5	9	10	dBm
modulationCharacteristics	Δf1avg maximum	225	264	275	KHz
	Δf2max minimum	185	210	-	KHz
	Δf2avg/Δf1avg	0.8	0.8	-	-
Maximum carrier frequency offset			7	35	KHz
Maximum drift rate			6	20	KHz
Carrier drift			2	50	KHz

Receiver

Items	min.	Typ.	Max.	Unit
Receiver Sensitivity (PER ≤ 30.8%)	-	-84	-80	dBm
Maximum input signal level(PER ≤ 30.8%)	-10			dBm
PER Report Integrity(-30dBm input)	50	50	65.4	%

2.3 Audio Characteristics

2.3.1 Stereo codec: analog-to-digital converter

Analog-to-digital converter						
Parameter	Conditions		Min	Typ	Max	Unit
Resolution	-		-	-	16	Bits
Input sample rate, Fsample	-		8	-	48	kHz
Maximum ADC input signal amplitude	0 dB = 1600 mVpk-pk		13	-	2260	mVpk-pk
SNR	fin = 1 kHz B/W = 20 Hz→Fsample/2 (20 kHz max) A - Weighted THD+N < 0.1% 1.6 Vpk-pk input	Fsample				
		8 kHz	-	94.4	-	dB
		16 kHz	-	92.4	-	dB
		32 kHz	-	92.5	-	dB
		44.1 kHz	-	93.2	-	dB
		48 kHz	-	91.9	-	dB
THD+N	fin = 1 kHz B/W = 20 Hz→Fsample/2 (20 kHz max) 1.6 Vpk-pk input	Fsample				
		8 kHz	-	0.004	-	%
		48 kHz	-	0.016	-	%
Digltal gain	Digital gain resolution = 1/32		-24	-	-21.5	dB
Analog gain	Pre-amplifier setting = 0 dB, 9 dB, 21 dB or 30 dB Analog setting = -3 dB to 12 dB in 3 dB steps		-3	-	42	dB
Stereo separation(crosstalk)			-	-89.9	-	dB

2.3.1 Stereo codec: digital-to-analog converter

Digital-to-analog converter							
Parameter	Condition			Min	Typ	Max	Unit
Resolution				-	-	16	Bits
Output sample rate, Fsample				8	-	48	kHz
SNR	fin = 1 kHz B/W = 20 Hz → 20 kHz A - Weighted THD+N < 0.1% 0 dBFS input	Fsample	Load				
		48 kHz	100 kΩ	-	95.4	-	dB
		48 kHz	32 Ω	-	96.5	-	dB
		48 kHz	16 Ω	-	95.8	-	dB
THD+N	fin = 1 kHz B/W = 20 Hz → 20 kHz 0 dBFS input	Fsample	Load				
		8 kHz	100 kΩ	-	0.0021	-	%
		8 kHz	32 Ω	-	0.0031	-	%
		8 kHz	16 Ω	-	0.0034	-	%
		48 kHz	100 kΩ	-	0.0037	-	%
		48 kHz	32 Ω	-	0.0029	-	%
		48 kHz	16 Ω	-	0.0042	-	%
Digital gain	Digital gain resolution = 1/32			-24	-	21.5	dB
Analog gain	Analog gain resolution = 3 dB			-21	-	0	dB
Output voltage	Full-scale swing (differential)			-	-	778	mVrms
Stereo sepration(crosstalk)				-	-90.5	-	dB

2.4 ESD Protection

- ESD Handling ratings

Condition	Class	Max rating
Human Body Model Contact Discharge per ANSI/ESDA/JEDEC JS-001	**2**	2 kV (all pins except CHG_EXT. CHG_EXT is rated at 1 kV)
Charged Device Model Contact Discharge per JEDEC/EIA JESD22-C101	**III**	500 V (all pins)

3. Interface

3.1 UART interface

Four signals are used to implement the UART function.

This is only for test and debug. UART_TX and UART_RX transfer data between the two devices. The remaining two signals, UART_CTS and UART_RTS, can be used to implement RS232 hardware flow control where both are active low indicators.

3.1.1 UART Setting

User can change data format the following selection using PSKEY.

However, host shall communicate with default setting UART connection initiated at first time.

Baud Rate = (PSKEY_UART_BAUD_RATE) / 0.004096

Parameter	Possible value
Baud Rate	9600 ~ 4M Baud
Flow Control	None
Parity	None, Odd or Even
Number of Stop Bits	1 or 2
Bits per channel	8

3.2 USB interface

F1DQ3007 has a full speed(12Mbps) USB interface for communicating with other compatible digital devices.

F1DQ3007 contains internal USB termination resistors and requires no external resistor matching.

F1DQ3007 supports the Universal serial bus specification, battery charging specification together.

The below describes USB basics and architecture.

- Power distribution for high and low bus-powered configurations
- Power distribution for self-powered configuration, which includes USB VBUS monitoring
- USB enumeration
- USB suspend modes and Bluetooth low-power modes :
  . Global suspend
  . Selective suspend, includes remote wake

. Wake on Bluetooth, includes permitted devices and set-up prior to selective suspend

. Suspend mode current draw

. PIO status in suspend mode

. Resume, detach and wake PIOs

- Battery charging from USB, which describes dead battery provision, charge currents, charging in suspend modes and USB VBUS voltage consideration

3.3 Programming and Debug interface

F1DQ3007 provides a debug SPI interface for programming, configuring, and debugging the F1DQ3007. Access to this interface is required in production. Ensure the 4 SPI signals and the SPI_PCM# line are brought out to either test points or a header. The SPI_PCM# line needs to be pulled high externally to use the SPI interface.

QTIL provides development and production tools to communicate over the SPI from a PC, although a level translator circuit is often required. All are available from QTIL.

3.4 I2C interface

The F1DQ3007 supports an I²C interface for I/O port expansion. The default assignment of the I²C interface onto the PIOs on the QCC3007 QFN is:

■ PIO[0] is the I²C interface SCL line (AMP_I2C_SCL)

■ PIO[1] is the I²C interface SDA line (AMP_I2C_SDA)

Alternatively, the I²C interface can be assigned to two PIOs from PIO[9:0] using PSKEY_I2C_SCL_PIO And PSKEY_I2C_SDA_PIO.

***NOTE** The I²C interface requires external pull-up resistors. Ensure that external pull-up resistors are suitably sized for the I²C interface speed and PCB track capacitance.

3.5 LED drivers

F1DQ3007 includes a 3-pad synchronized PWM LED driver for driving RGB LEDs for producing a wide range of colors. All LEDs are controlled by firmware. The terminals are open-drain outputs, so the LED must be connected from a positive supply rail to the pad in series with a current-limiting resistor.

3.6 Audio Interfaces

F1DQ3007's audio interface consists below.

- Dual analog audio inputs
- Dual analog audio outputs
- 1 digital microphone input
- 2 configurable I²S interfaces
- Configurable SPDIF input interface

3.6.1 Analog Input

F1DQ3007 contains an independent low-noise microphone bias generator. In using Line input, F1DQ3007 supports a differential input and a single-ended input.

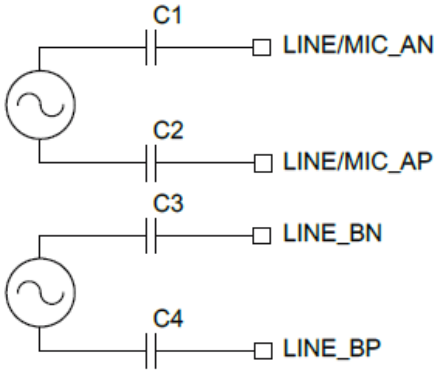

■ Differential input

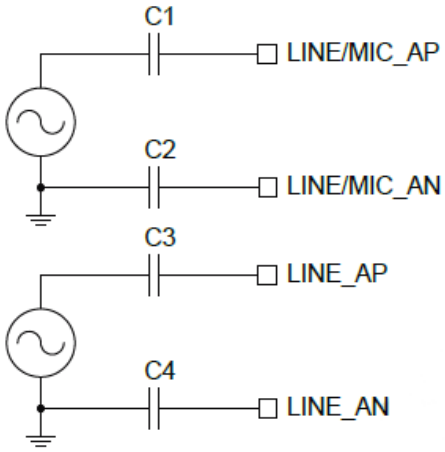

■ Single-ended input

3.6.2 Audio Output

The output stage digital circuitry converts the signal from 16 bit per sample, linear PCM of variable sampling frequency to bit stream, which is fed into the analog output circuitry.

The analog output circuit comprises a DAC, a buffer with gain-setting, a low pass filter, and a class AB output stage amplifier.

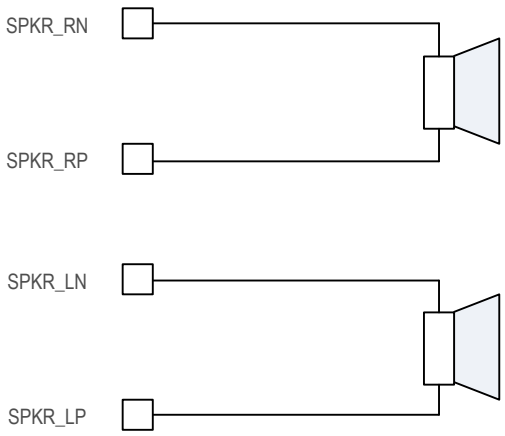

Mono operation is a single-channel operation of the stereo codec. The left channel represents the single mono channel for audio in and audio out. In mono operation, the right channel is the auxiliary mono channel for dual-mono channel operation

3.6.3 I²S1 and I²S2 interface

The digital audio interface supports the industry standard formats for I2S, left-justified or right-justified. The interface shares the same pins as the PCM interface, which means each audio bus is mutually exclusive in its usage.

F1DQ3007 supports several alternative PCM data formats. For further details, contact QTIL. When in PCM mode, the following pin name to function mappings apply.

I²S pin	PCM function
I2Sn_SD_IN	PCM_IN
I2Sn_SD_OUT	PCM_OUT
I2Sn_WS	PCM_SYNC
I2Sn_SCK	PCM_CLK

3.7 Battery Charger

3.7.1 Battery Charger Hardware Operating Modes

The battery charger has 5 modes.

- Disabled
- Trickle charge
- Fast charge
- Standby : fully charged or float charge
- Error : charging input voltage.

The battery charger operating mode is determined by the battery voltage and current. The internal charger circuit can provide up to 200mA. For currents higher than this, external pass transistor is need.

3.7.1.1 Disable mode

In this mode, the battery charger is fully disabled and draws no active current on any of its terminals.

3.7.1.2 Trickle Charge mode

In this mode, a current of approximately 10% of the fast charge current.

3.7.1.3 Fast Charge mode

In this mode, a current of approximately is between 10mA and 200mA.

3.7.1.4 Standby mode

When the battery is fully charged, the charger enters standby mode, and battery charging stops.

3.7.1.5 Error mode

The charger enters the error mode if the voltage on the VBUS pin is too low to operate the charger correctly. In this mode, charging is stopped. The battery charger does not require a reset to resume normal operation.

3.7.2 Battery Charger External Mode

The external mode is for charging higher capacity batteries using an external pass device. The current is controlled by sinking a varying current into the CHG_EXT pin, and the current is determined by measuring the voltage drop across a resistor.

3.8 Reset, RST#

QCC3007 QFN is reset from several sources:

- RST# pin
- Power-on reset
- USB charger attach reset
- Software configured watchdog timer

The RST# pin is an active low reset. Assert the reset signal for a period > 5 ms to ensure a full reset.

At reset the digital I/O pins are set to inputs for bidirectional pins and outputs are set to tristate.

NOTE Reset can also be triggered by a UART break

4. Application Schematic

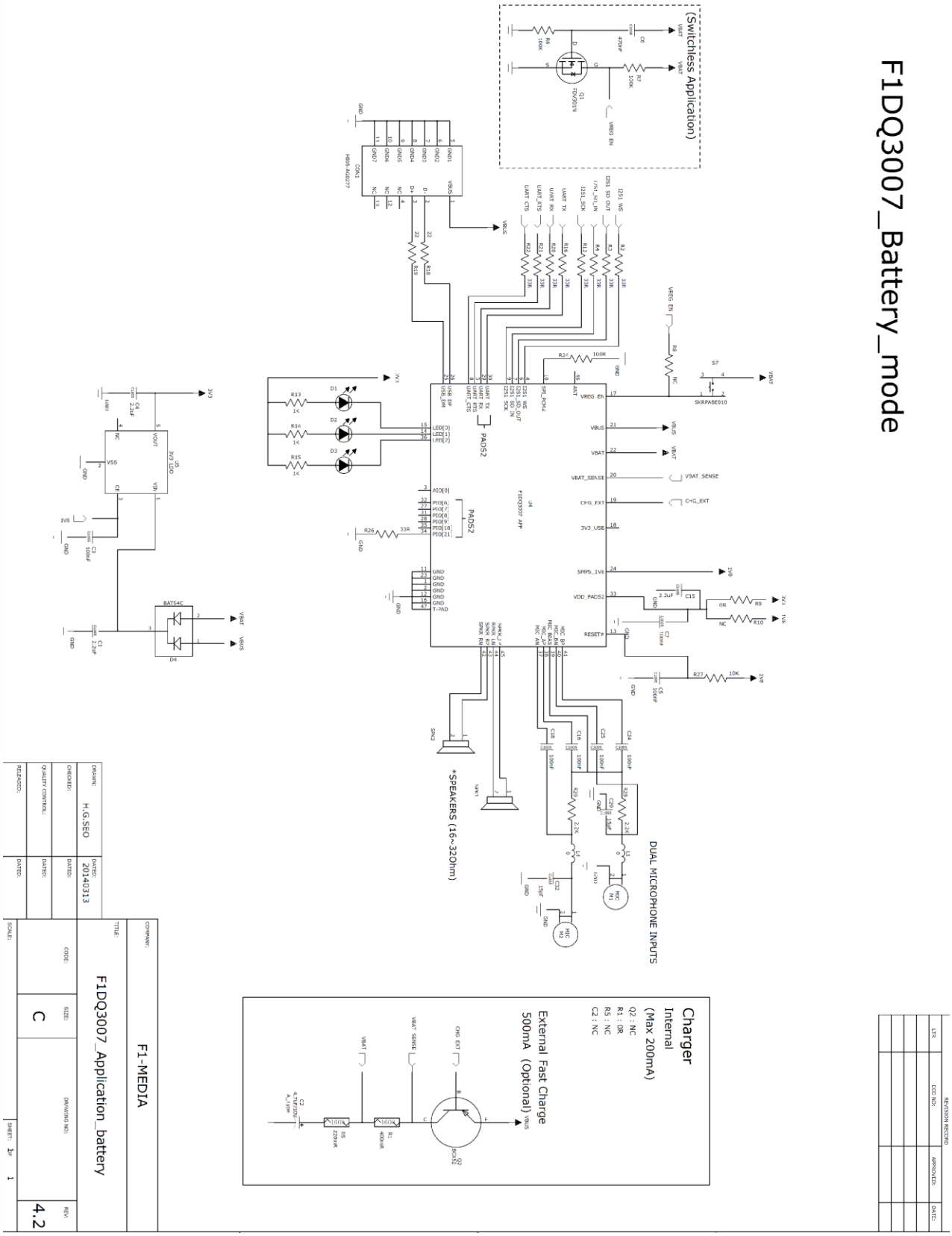

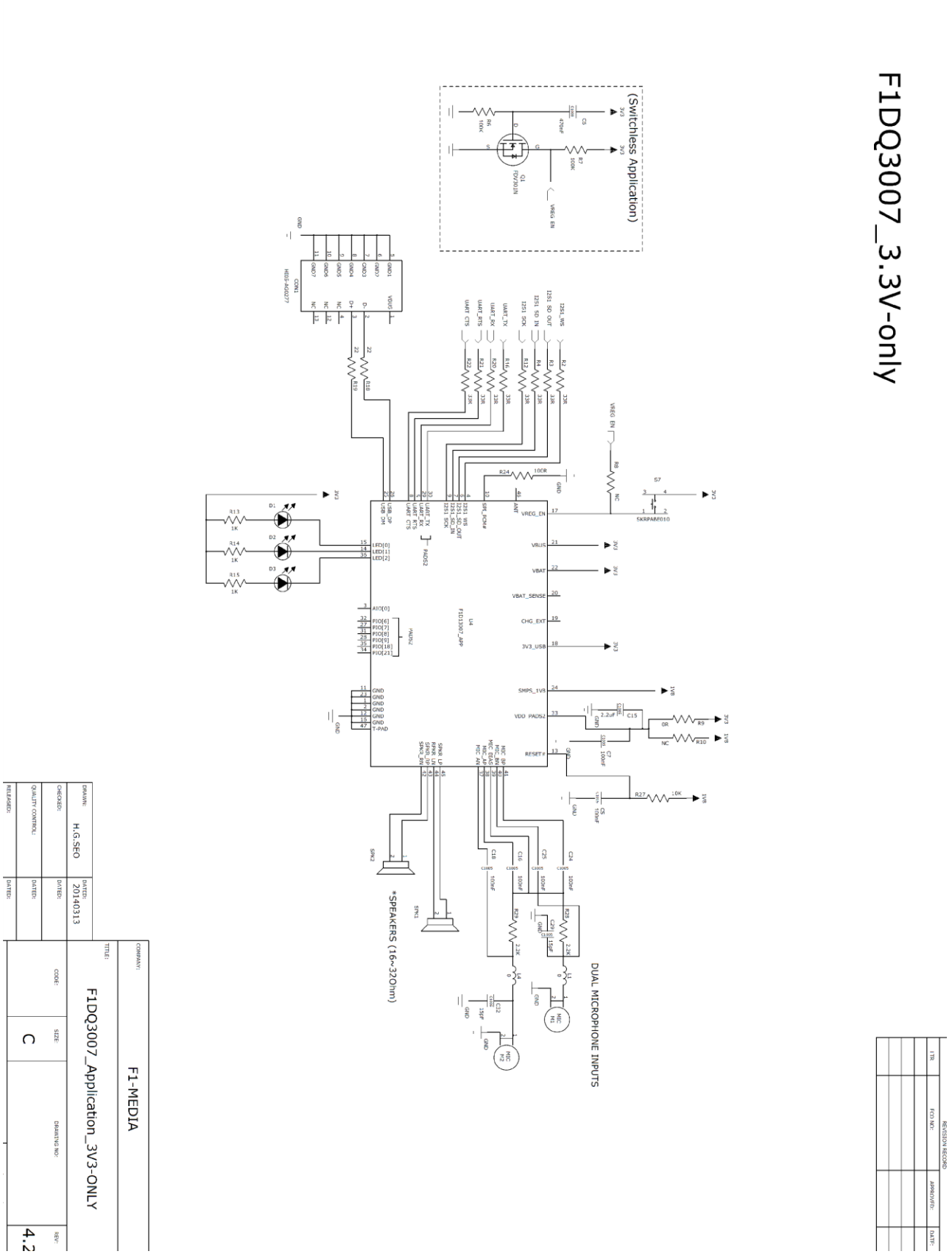
F1DQ3007_3.3V-only
(Switchless Application)
DUAL MICROPHONE INPUTS
*SPEAKERS (16~32Ohm)
F1-MEDIA
F1DQ3007_Application_3V3-ONLY
H.G.SEO
20140313
C
4.2

5. Antenna spec

5.1 Passive measurement data

Return Loss

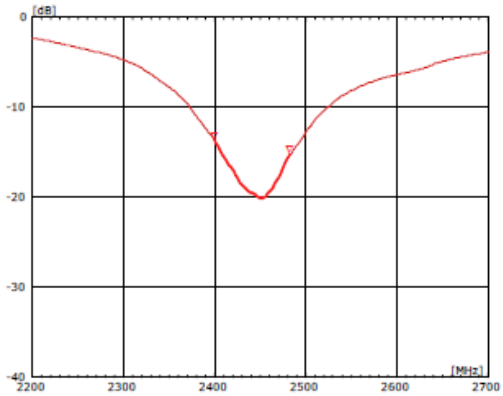

VSWR

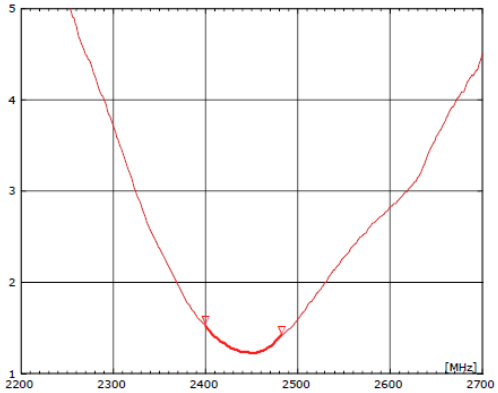

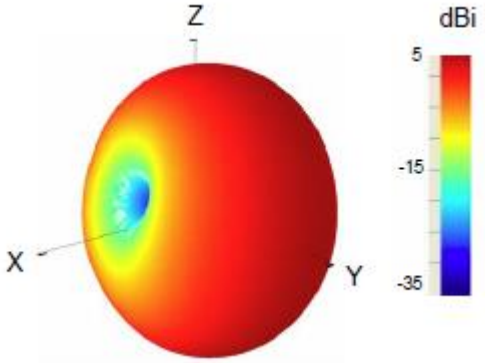

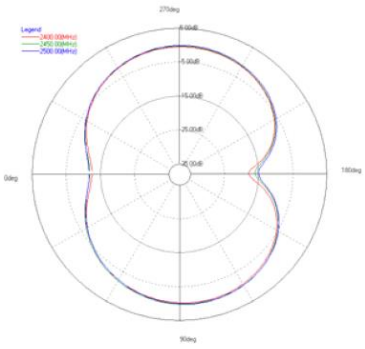

XY plane

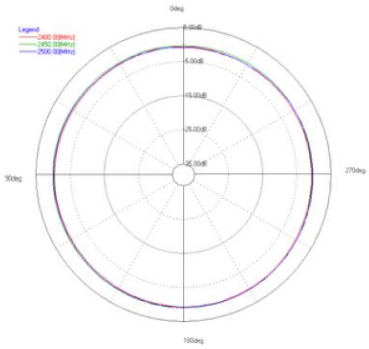

ZY plane

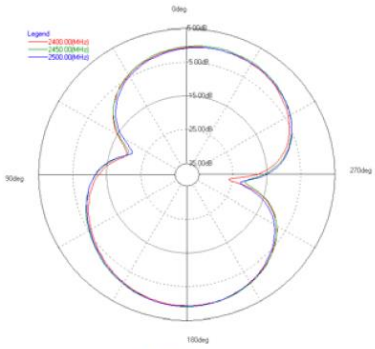

XZ plane

5.2 Active measurement data(T.B.D)

6. Module Placement Rule

On the main PCB, the areas under the antenna should not contain any top, inner layer, or bottom copper as shown in Figure. For the best range performance, keep all external metal away from the chip antenna at least 45 mm. In all cases, the performance of the antenna can vary depending on GND.

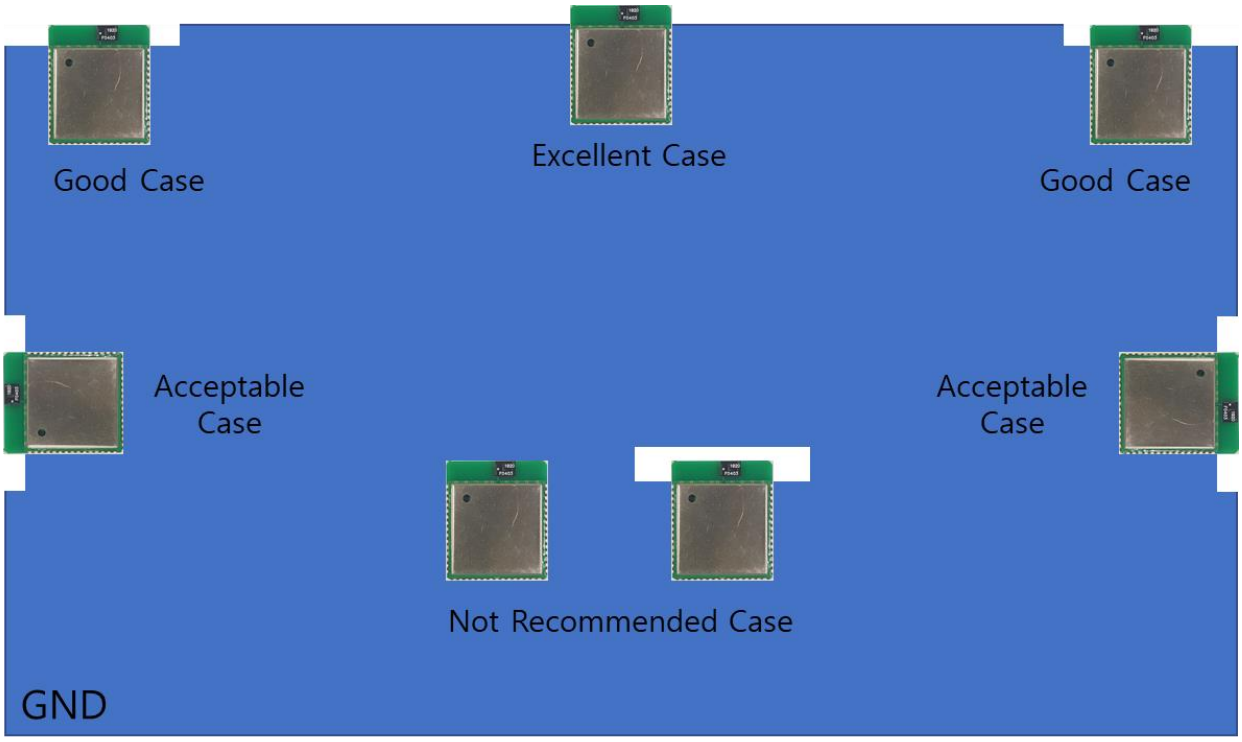

7. PCB Layout

F1DQ3007_Rev1.0_Layout

1. Top View (Unit : mm)

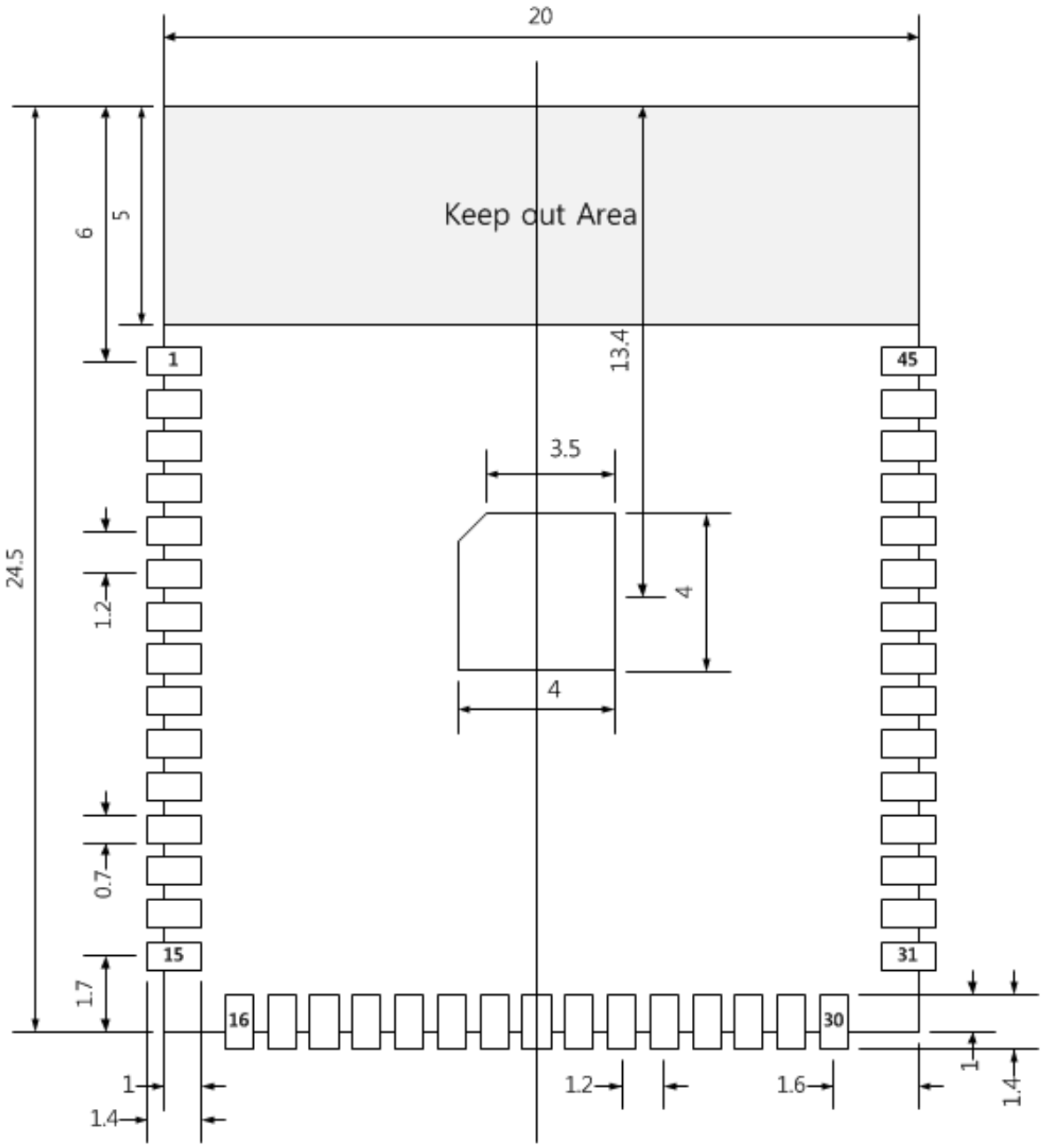

8. Reflow Temperature Profile

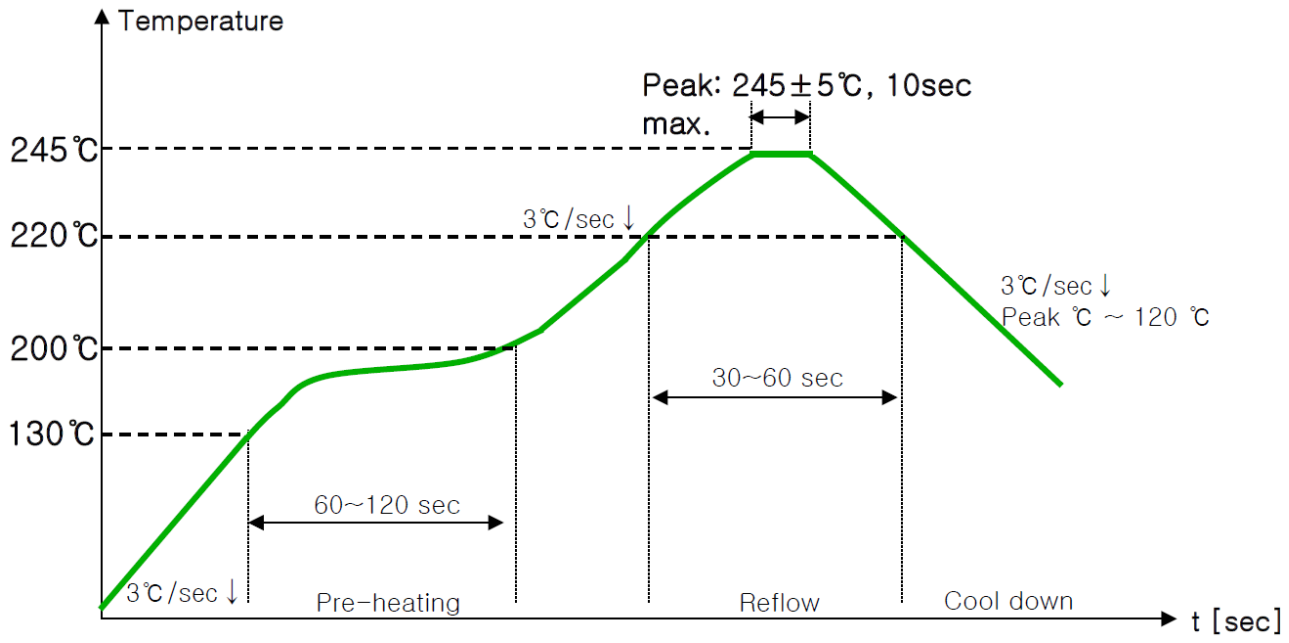

- Please use the reflow within 2 times.

9. Packing information

a. Reel Specification

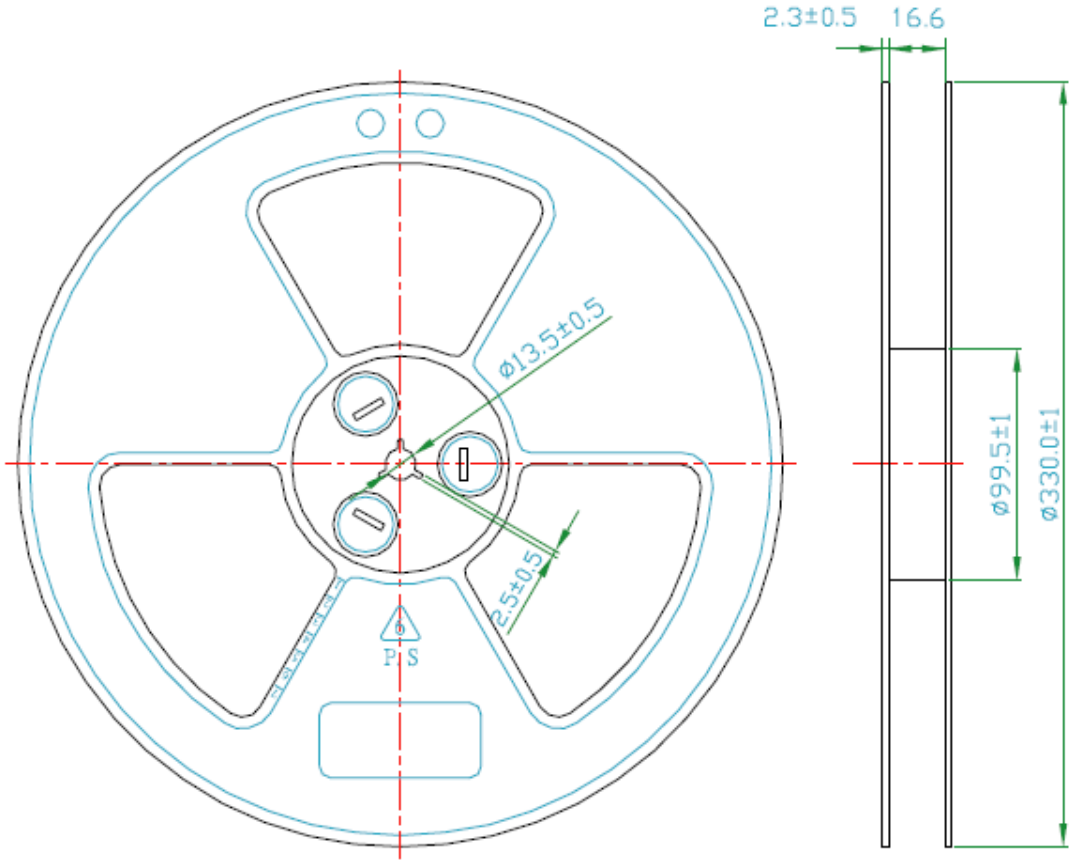

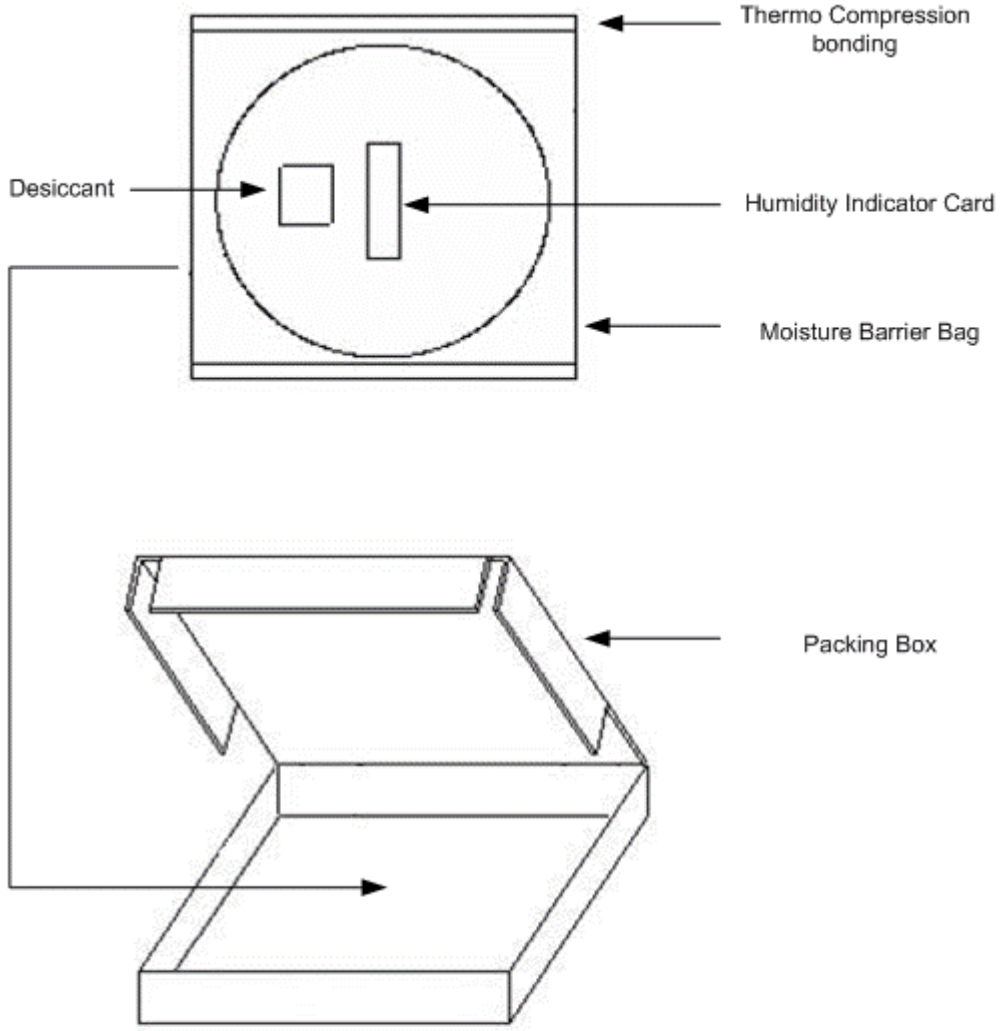
Thermo Compression bonding
Desiccant
Humidity Indicator Card
Moisture Barrier Bag
Packing Box

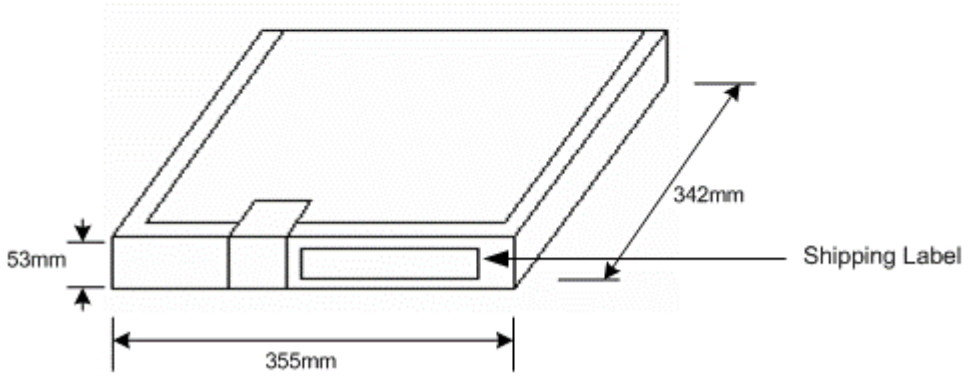
342mm
53mm
Shipping Label
355mm

b. Barcode(T.B.D)

Shipping Label

10. FCC Statement

FCC Part 15C 15.247, 15E 15.407 is applied to the modular transmitter.

Federal Communication Commission Interference Statement
This equipment has been tested and found to comply with the limits for a Class B digital device, pursuant to Part 15 of the FCC Rules. These limits are designed to provide reasonable protection against harmful interference in a residential installation. This equipment generates, uses and can radiate radio frequency energy and, if not installed and used in accordance with the instructions, may cause harmful interference to radio communications. However, there is no guarantee that interference will not occur in a particular installation. If this equipment does cause harmful interference to radio or television reception, which can be determined by turning the equipment off and on, the user is encouraged to try to correct the interference by one of the following measures:

- Reorient or relocate the receiving antenna.
- Increase the separation between the equipment and receiver.
- Connect the equipment into an outlet on a circuit different from that to which the receiver is connected.
- Consult the dealer or an experienced radio/TV technician for help.

This device complies with Part 15 of the FCC Rules. Operation is subject to the following two conditions: (1) This device may not cause harmful interference, and (2) this device must accept any interference received, including interference that may cause undesired operation.

FCC Caution: Any changes or modifications not expressly approved by the party responsible for compliance could void the user's authority to operate this equipment.

This device and its antenna(s) must not be co-located or operation in conjunction with any other antenna or transmitter.

IMPORTANT NOTE:

FCC Radiation Exposure Statement:

This equipment complies with FCC radiation exposure limits set forth for an uncontrolled environment.

This equipment should be installed and operated with minimum distance 20cm between the radiator & your body.

This module is intended for OEM integrator. The OEM integrator is still responsible for the FCC compliance requirement of the end product, which integrates this module.

USERS MANUAL OF THE END PRODUCT:

In the users manual of the end product, the end user has to be informed to keep at least 20cm separation with the antenna while this end product is installed and operated. The end user has to be informed that the FCC radio-frequency exposure guidelines for an uncontrolled environment can be satisfied. The devices must be installed and used in strict accordance with the manufacturer's instructions as described in the user documentation that comes with the product.The end user has to also be informed that any changes or modifications not expressly approved by the manufacturer could void the user's authority to operate this equipment. If the device is small or for such use that it is not practicable to place the statement on the product, then additional FCC part 15.19 statement is required to be available in the users manual: This device complies with Part 15 of FCC rules. Operation is subject to the following two conditions: (1) this device may not cause harmful interference and (2) this device must accept any interference received, including interference that may cause undesired operation.

LABEL OF THE END PRODUCT:

The final end product must be labeled in a visible area with the following " Contains FCC ID: MBBF1DQ3007 ". If the device is small or for such use that it is not practicable to place the statement on the product, then the following FCC part 15.19 statement has to also be available on the label: This device complies with Part 15 of FCC rules. Operation is subject to the following two conditions: (1) this device may not cause harmful interference and (2) this device must accept any interference received, including interference that may cause undesired operation.

11. IC Statement

This Class B digital apparatus complies with Canadian ICES-003.
This device complies with Industry Canada license-exempt RSS standard(s).
Operation is subject to the following two conditions: (1) this device may not cause interference, and (2) this device must accept any interference, including interference that may cause undesired operation of the device.
Cet appareil numérique de la classe B est conforme á la norme NMB-003 du Canada.
Le présent appareil est conforme aux CNR d'Industrie Canada applicables aux appareils radio exempts de licence. L'exploitation est autorisée aux deux conditions suivantes : (1) l'appareil ne doit pas produire de brouillage, et (2) l'utilisateur de l'appareil doit accepter tout brouillage radioélectrique subi, même si le brouillage est susceptible d'en compromettre le fonctionnement.

Any changes or modifications not expressly approved by the manufacturer could void the user's authority to operate this equipment.

This device and its antenna(s) must not be co-located or operation in conjunction with any other antenna or transmitter.

The device could automatically discontinue transmission in case of absence of information to transmit, or operational failure. Note that this is not intended to prohibit transmission of control or signaling information or the use of repetitive codes where required by the technology.

IMPORTANT NOTE:

IC Radiation Exposure Statement

This equipment complies with IC RSS-102 radiation exposure limits set forth for an uncontrolled environment. This equipment should be installed and operated with minimum distance 20cm between the radiator & your body.
Cet équipement est conforme aux limites d'exposition aux rayonnements IC établies pour unenvironnement non contrôlé. Cet équipement doit être installé et utilisé avec un minimum de 20cm de distance entre la source de rayonnement et votre corps.

This module is intended for OEM integrator. The OEM integrator is still responsible for the IC compliance requirement of the end product, which integrates this module.

USERS MANUAL OF THE END PRODUCT:

In the users manual of the end product, the end user has to be informed to keep at least 20cm separation with the antenna while this end product is installed and operated. The end user has to be informed that the IC radio-frequency exposure guidelines for an uncontrolled environment can be satisfied. The end user has to also be informed that any changes or modifications not expressly approved by the manufacturer could void the user's authority to operate this equipment. If the device is small or for such use that it is not practicable to place the statement on the product, then following IC statement is required to be available in the users manual: IC statement is required to be available in the users manual: This device complies with Industry Canada license-exempt RSS standard(s). This Class B digital apparatus complies with Canadian ICES-003. Operation is subject to the following two conditions: (1) this device may not cause harmful interference and (2) this device must accept any interference received, including interference that may cause undesired operation.

LABEL OF THE END PRODUCT:

The final end product must be labeled in a visible area with the following
" Contains IC : 11657A-F1DQ3007 "

Transmit Antenna Notice

This radio transmitter [IC: 11657A-F1DQ3007] has been approved by Innovation, Science and Economic Development Canada to operate with the antenna types listed below, with the maximum permissible gain indicated. Antenna types not included in this list that have a gain greater than the maximum gain indicated for any type listed are strictly prohibited for use with this device.

Antenna list (type, maximum gain(dBi))

Model	Type	Maximum gain (dBi)
F1-FR4-ANT : F1304L	SMD	2.1

12. Revision History

Revision	Date	Change Descriptions	Issued by
Rev 1.0	2019-07-10	Initial release	T.G.KIM
Rev1.1	2019-08-21	Change Name / Pinmap / Application SCH	T.G.KIM
Rev1.2	2019-09-11	Electrical data update	T.G.KIM
Rev1.3	2019-09-16	Operating Temperature Range & Keep out area update	T.G.KIM
Rev1.4	2019-10-01	Add Module Placement Rule	J.H.PARK
Rev1.5	2019-10-29	Add Audio Characteristics	T.G.KIM
Rev1.6	2019-12-12	Dimension & modify	T.G.KIM