# ACC100 & ACC100S V2 Models
# Low Power FM Broadcaster

**From Progressive Concepts, Made in the USA.**

The ACC100V2 is a quartz stabilized microprocessor and phase-locked-loop DIRECT FM modulated transmitter. This unit provides short range broadcasting to any FM receiver including auto radios and portable radios. Typical applications include:

(1) Advertising of homes for sale, or products for sale, to passing automobiles
(2) Broadcast of church services and/or PA systems to parking lots or hearing impaired
(3) Re-broadcast of TV sound to institutional inmates equipped with portable radios and earphones, then switching off speakers to reduce ambient noise levels – several TV's may be operated in an area without sound interference.

## *Specifications:*

| | |
|---|---|
| **Frequency** | **87.9 MHz to 107.9 MHz in discreet 100KHz increments** |
| **Radio Output** | **FCC Part 15 & IC operation, 250 microvolts per meter at 3 meters** |
| **Harmonics** | **-40 dB or better across band** |
| **Channels** | **Selected by direct-reading rotary switches** |
| **Audio Response** | **40Hz to 20KHz (mono)** |
| **Audio Input** | **RCA Input Jack (-10dB)** |
| **Audio Level** | **Line level, typical of TV, VCR, CD and PA system output** |
| **Power Supply** | **12 volts, 100 ma. DC wall adapter (supplied)** |
| **Circuit Board** | **2-sided epoxy glass, extremely rugged** |
| **Size & Weight** | **1.5" x 4.1" x 5.5", 13 ounces** |
| **Antenna** | **24-inch fixed-length wire** |
| **Range** | **50 to 200 feet dependent on sensitivity of the receiver** |

**This device complies with CFR Title 47, Part 15 of the FCC Rules governing the use of low power radio frequency devices. It may be operated on the FM band without a license. Operating range may vary from 50 to several hundred feet depending on the sensitivity of the receiver. Operation must cease if this unit causes interference to licensed radio stations; however, it is not protected from receiving interference. Internal modification or change in the length of the fixed-wire antenna may void FCC certification.**

### *Warranty & Repair*

This device is warranted for a period of two years from date of sale against defects in materials and workmanship. The user should not attempt repair or modification of this device. Contact customer support if you experience problems or need repairs.

***Progressive Concepts*** ***support@progressive-concepts.com***
***305 South Bartlett Road***
***Streamwood, IL 60107*** (630) 736-9822 (630) 736-0353 fax

### *Frequency Selection*

The operating frequency is selected by the rotation of 3 switches accessible through the left side of the rectangular cutout on the rear panel of the enclosure. The circuit's microprocessor accepts only frequencies between and including 87.9 MHz and 107.9 MHz. Any other setting is invalid and will default automatically to 88.1 MHz.

**Example of switch setting**

| | S1 (10's) | S2 (1's) | S3 (.1's) | |
|---|---|---|---|---|
| **(Invalid)** | **7** | **9** | **6** | **88.1 MHz (default)** |
| **(Valid)** | **8** | **7** | **9** | **87.9 MHz** |
| **(Valid)** | **8** | **8** | **1** | **88.1 MHz** |
| **(Valid)** | **9** | **1** | **5** | **91.5 MHz** |
| **(Valid)** | **0** | **7** | **9** | **107.9 MHz** |
| **(Invalid)** | **0** | **8** | **0** | **88.1 MHz (default)** |

### *Frequency of operation*

Select a channel which will not interfere with the reception of a commercial FM station and which will not interfere with your reception of the ACC100. These should be frequencies ending with .1, .3, .5, .7, or .9 Stagger individual frequencies when several ACC100's are used in the same area, usually 3 to 5 channels apart will suffice such as 98.1, 98.9, 99.7, 100.5, etc.

***After the frequency has been set, disconnect the power supply for 5 seconds. The ACC100 will return to the set frequency automatically when ever it is switched on and when power is restored after a power outage.***

### *Line Level Audio* (approximately 1 volt peak to peak)

Simply connect the ACC100 to your audio source with the supplied RCA audio cable. If reception appears distorted you may have an audio level greater than required. Placing a resistor in series with the audio source may reduce the audio to an acceptable level. A typical resistor value might be 1000 Ohms.

### *Audio from a PA or speaker system*

In the absence of a line level audio source you may connect the audio input of the ACC100 to wires normally connected to a speaker. Be sure to read the WARNING section on page 3 if you connect to speaker wires.

### *Stereo connections*

The ACC100 is a monaural broadcaster. Some audio sources (TV's) permit switching to a monaural output. If you have a stereo source that cannot be switched to monaural then you may use the mixing circuit shown on page 3. The model ACC100S is a Stereo unit.

**WARNING: You may ignore this warning if you use an audio source with an "RCA" output jack. These are typically used on consumer type audio equipment.**

**When attempting to derive audio from speaker output terminals, or from speaker wires, you must assure the source equipment is not electrically "hot". Some equipment, especially radio and TV receivers, have internal switching power supplies, which may connect the equipment to one side of the AC power line. Touching the chassis, or any conducting device connected to the chassis, could result in a lethal electrical shock.**

**Therefore, if you intend to use speaker wires as your audio source, assure that neither speaker lead has an electrical potential in respect to "ground". A simple AC and DC test with a multimeter connected between each speaker lead and a grounded object can determine if you have a safe connection.**

Speaker leads, where one lead is common to "ground" or to the equipment chassis, and is not "hot" as described above, may be connected by way of an RCA plug and cable. You must assure the speaker ground connects to the cable shield (shell of RCA plug).

Speaker leads where both leads are "floating" and no common or chassis connection exists should use a "balanced" audio connection. There are several types of external audio "BALUNS" that can be bought at most electronic stores such as Best Buy or Guitar Center. When such an audio Balun is installed in line with the audio input then neither audio lead connects to the chassis.

If required, the following circuit combines stereo channels to produce a balanced monaural output. Resistors are 100 -1000 Ohms each. If the sources are speaker leads, where the speaker is disconnected, you may want to terminate the leads with 5 watt resistors equal to the impedance of the removed speakers – typically 8 or 16 Ohms.

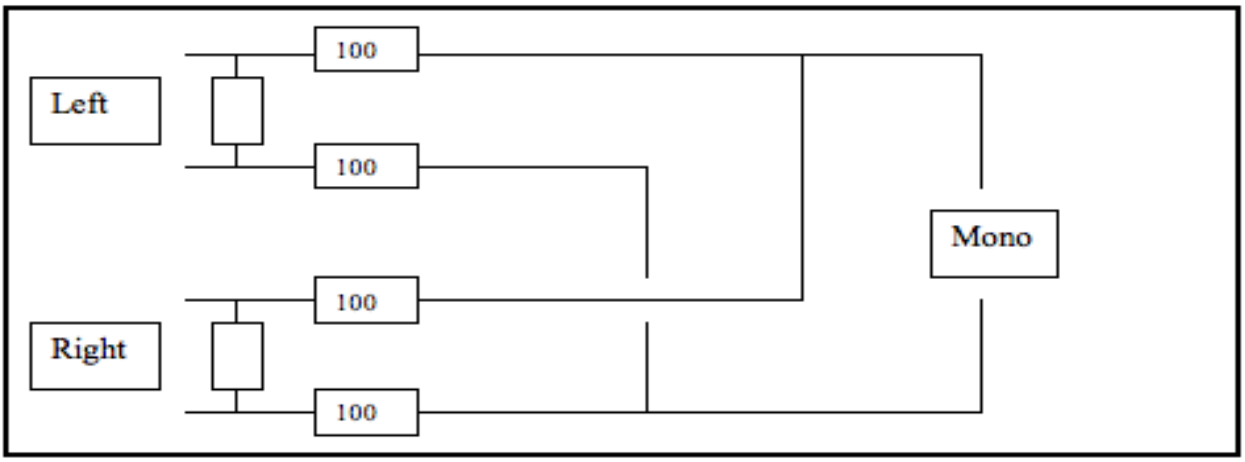

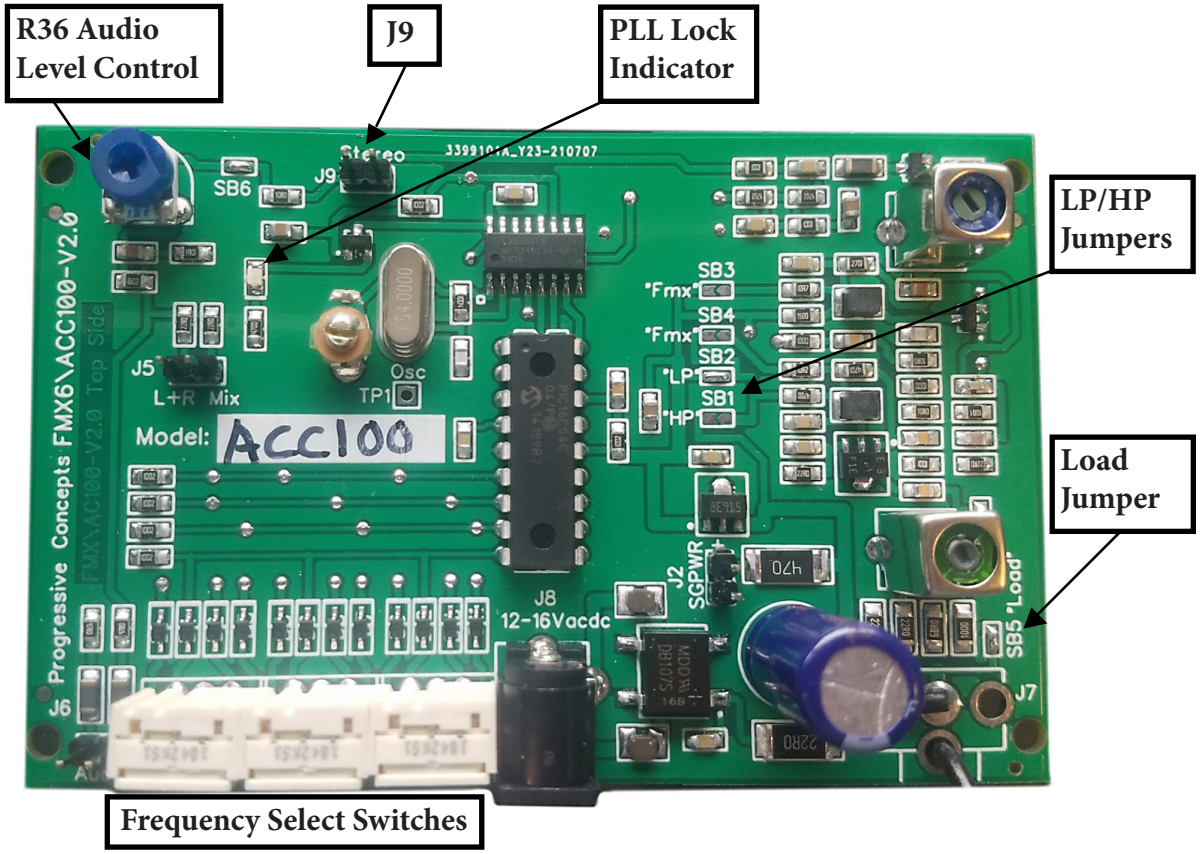


The New Surface Mount ACC100 - V2 incorporates some changes to facilitate easier assembly and use. The original radio frequency circuitry and the associated parts placement remains exactly the same as in previous versions. There are no changes in the RF characteristics or modulator circuits.

A manual audio level control (R36) with a value of 1000 Ohms has been substituted for the original 1000 Ohm fixed resistance as the termination for the pre-emphasis network. This level control can be used to set your audio level to match any source audio from –20dB to +20dB.

The potentiometer may be replaced with a fixed resistor if desired; however a solder bridge is then required on pads located where the potentiometer would have been located. As before, if a multiplex signal is injected at J9 then one lead of R4 should be clipped to avoid degradation of the signal by the pre-emphasis network.

The balanced audio transformer has been removed to provide higher audio quality. If you require an audio isolation transformer contact Progressive Concepts. The frequency selection switches have been moved closer to the edge of the circuit board to provide easier setting of the frequency.

# *International Legal Statements:*

| FCC Part 15.19 Warning Statement- |
| --- |
| THIS DEVICE COMPLIES WITH PART 15 OF THE FCC RULES.<br>OPERATION IS SUBJECT TO THE FOLLOWING TWO CONDITIONS:<br>(1) THIS DEVICE MAY NOT CAUSE HARMFUL INTERFERENCE, AND<br>(2) THIS DEVICE MUST ACCEPT ANY INTERFERENCE RECEIVED, INCLUDING INTERFERENCE THAT MAY CAUSE UNDESIRED OPERATION. |
| **FCC Part 15.21 Warning Statement-** |
| NOTE: THE **GRANTEE** IS NOT RESPONSIBLE FOR ANY CHANGES OR MODIFICATIONS NOT EXPRESSLY APPROVED BY THE PARTY RESPONSIBLE FOR COMPLIANCE, SUCH MODIFICATIONS COULD VOID THE USER'S AUTHORITY TO OPERATE THE EQUIPMENT. |
| **IC RSS-GEN, SECtion 8.4 Warning Statement-** |
| **ENGLISH:**<br>This Device complies with Industry Canada license-exempt RSS standard(s).<br>Operation is subject to the following two conditions:<br>(1) THIS DEVICE MAY NOT CAUSE HARMFUL INTERFERENCE, AND<br>(2) THIS DEVICE MUST ACCEPT ANY INTERFERENCE RECEIVED, INCLUDING INTERFERENCE THAT MAY CAUSE UNDESIRED OPERATION. |
| **FRENCH:**<br>Le present appareil est conforme aux CNR d'Industrie Canada applicables aux appareils radio exemts de license. L'exploitation est autorisee aux deux conditions suivantes: (1) l'appareil ne doit pas produire de brouillage, et (2) l'utilisatuer de L'apprareil doit accepter tout brouillage radioelectrique subi, meme si le brouillage est susceptible d'en compromettre le fonctionnement. |

***Please note that any modifications to this equipment will void the FCC certification and/or Industry Canada certifications and could expose the operator to liabilties, penalties, forfietures and/or fines from the United States and/or Canadian authorities and/or other government agencies.***