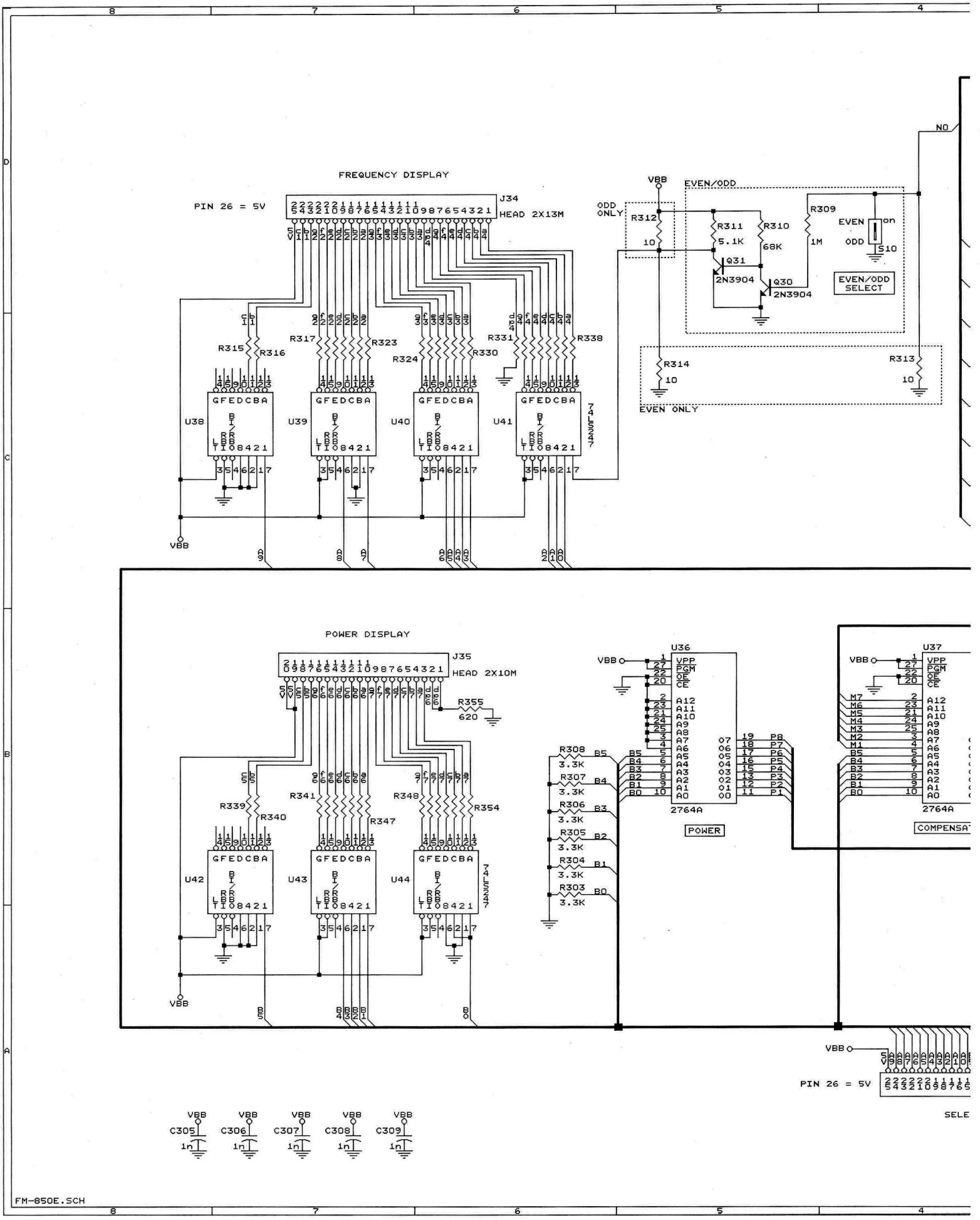
FREQUENCY DISPLAY
PIN 26 = 5V
J34
HEAD 2X13M
ODD ONLY
EVEN/ODD
R312
10
R311
5.1K
R310
68K
R309
1M
EVEN
ODD
on
S10
Q31
2N3904
Q30
2N3904
EVEN/ODD SELECT
R314
10
R313
10
EVEN ONLY
NO
R315
R316
R317
R323
R324
R330
R331
R338
U38
U39
U40
U41
74LS247
GFEDCBA
BI/RBO
RBI
TI 8421
VBB
POWER DISPLAY
J35
HEAD 2X10M
R355
620
R339
R340
R341
R347
R348
R354
U42
U43
U44
U36
2764A
POWER
U37
2764A
COMPENSA
VPP
PGM
OE
CE
A12
A11
A10
A9
A8
A7
A6
A5
A4
A3
A2
A1
A0
P8
P7
P6
P5
P4
P3
P2
P1
R308
3.3K
R307
3.3K
R306
3.3K
R305
3.3K
R304
3.3K
R303
3.3K
B5
B4
B3
B2
B1
B0
PIN 26 = 5V
SELE
C305
C306
C307
C308
C309
1n

FM-850E.SCH

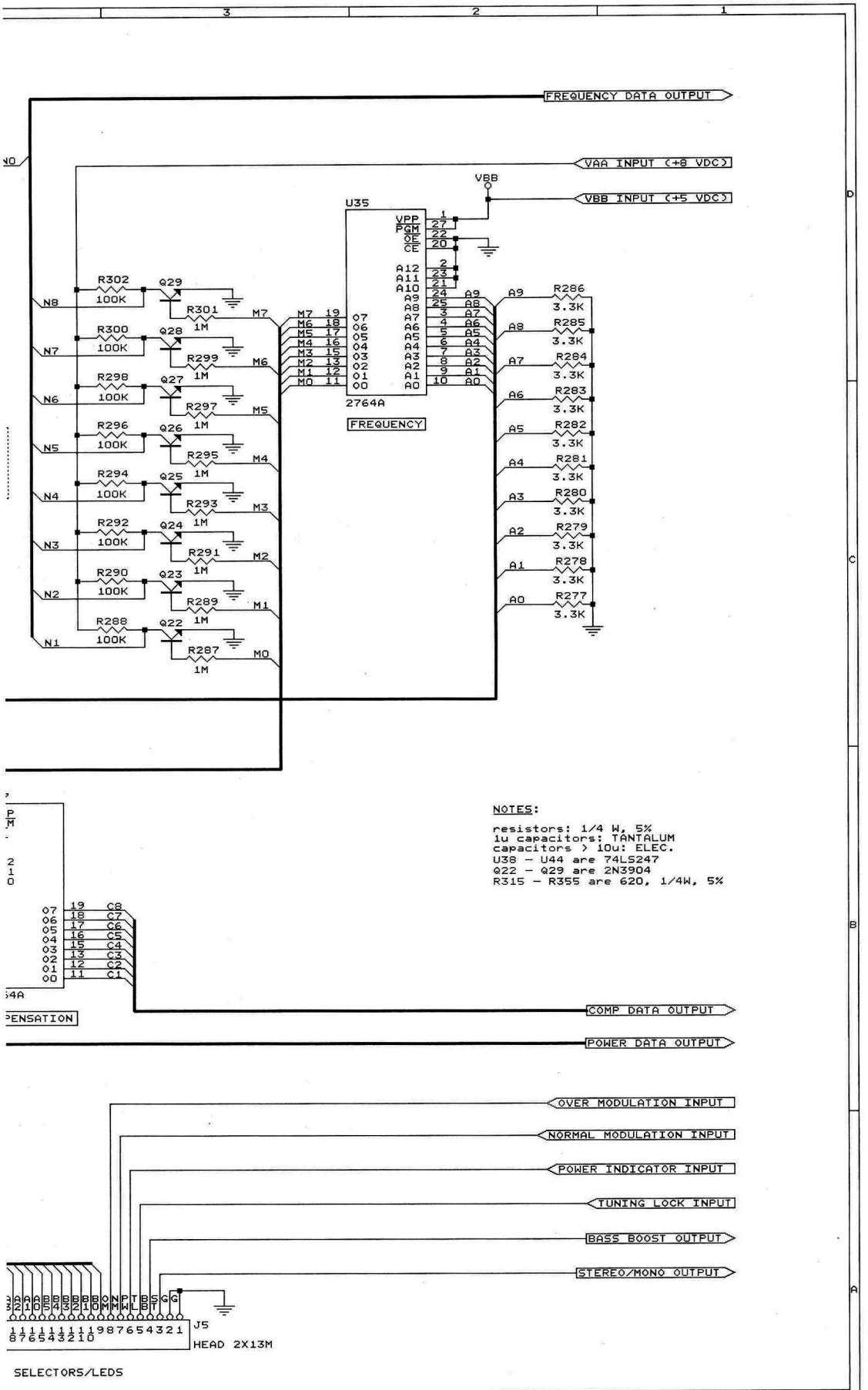

DECADE TRANSMITTERS inc.		
Title FM-800 & FM-850 FM TRANSMITTERS		
Size C	Document Number FREQUENCY/POWER SELECT & DISPLAY	REV 1
Date: June 6, 2001	Sheet 1 of 1	

@ DECADE 1998