Hardware Guide

HP Tablet PC Series

Document Part Number: 331734-001

October 2003

This guide explains how to identify, use, modify, and maintain the hardware features on the tablet PC and keyboard. It also includes power, networking, and environmental specifications, which may be helpful when traveling with the tablet PC.

© 2003 Hewlett-Packard Development Company, L.P.

Microsoft and Windows are trademarks of Microsoft Corporation in the U.S. and/or other countries. SD Logo is a trademark.

The information contained herein is subject to change without notice. The only warranties for HP products and services are set forth in the express warranty statements accompanying such products and services. Nothing herein should be construed as constituting an additional warranty. HP shall not be liable for technical or editorial errors or omissions contained herein.

Hardware Guide
HP Tablet PC Series
First Edition October 2003
Reference Number: TC1100/TR1105
Document Part Number: 331734-001

Contents

1 External Components

Pen Components. 1–1
Tablet PC Components 1–2
Front: Lights and Bluetooth. 1–2
Front: Pen-Activated Buttons 1–3
Right Side: Power Switch and
Power/Standby Light 1–4
Right Side: Windows Security and
Display Toggle Buttons 1–5
Right Side: Esc, Tab and Q Menu Buttons 1–6
Right Side: Jog Dial and Antenna 1–7
Lower Side. 1–8
Left Side: Attachment Slots and
Keyboard Connector 1–9
Left Side: Security Cable Slot, Vent and
Antenna 1–10
Top: Connectors and Jacks 1–11
Top: Pen Holder and LAN Connection Lights 1–12
Top: Card Slots, Buttons and Tether Eyelet 1–13
Back: Attachment Features and
Hard Drive Bay 1–14
Back: Battery Bay 1–15
Back: Memory and Mini PCI Compartment 1–16
Back: Labels 1–17
Back: Tilt Feet and Pad Feet 1–18

Additional Tablet PC Standard Components 1–19
Documentation CDs 1–20
Cords and Cables 1–21
Adapters and Accessories 1–22
Tablet PC Keyboard Components 1–23
Front: Lights and Pointing Device. 1–23
Front: Keys 1–24
Front: Positioning and Security Features. 1–25
Top. 1–26
Back 1–27
Additional Keyboard Standard Component 1–28

2 Pen, Command Controls and Keyboards

Pen 2–1
Entering Information with the Pen 2–2
Calibrating the Pen 2–4
Setting Pen Preferences 2–5
Command Controls 2–6
Identifying Command Controls 2–6
Command Controls Quick Reference 2–7
Using Command Controls 2–8
Setting Command Control Preferences 2–14
On-Screen Keyboard 2–17
Tablet PC Keyboard. 2–18
Using the Pointing Device. 2–19
Using the Keypad 2–20
Using F11/F12 2–23

3 Battery Packs

Running the Tablet PC on Battery Power 3–1
Replacing a Battery Pack 3–2
Removing a Battery Pack 3–2
Inserting a Battery Pack. 3–4
Securing a Battery Pack 3–6
Accessing the Battery Pack Security Screw 3–6
Inserting a Battery Pack Security Screw 3–7
Charging a Battery Pack. 3–8
Charging a New Battery Pack 3–9
Charging an In-Use Battery Pack 3–9
Monitoring the Charge in a Battery Pack. 3–10
Obtaining Accurate Charge Information 3–10
Displaying Charge Information on the Screen 3–10
Displaying Charge Information on a Battery Pack. 3–12
Managing Low-Battery Conditions 3–13
Identifying Low-Battery Conditions 3–13
Resolving Low-Battery Conditions. 3–14
Initiating and Resuming from Standby or Hibernation 3–15
Calibrating a Battery Pack 3–16
When to Calibrate 3–16
How to Calibrate 3–16
Battery Conservation Procedures and Settings 3–19
Conserving Power as You Work 3–19
Selecting Power Conservation Settings. 3–19
Storing a Battery Pack 3–20
Disposing of a Used Battery Pack 3–21
Finding More Power Information 3–21

4 Drives

Adding a Drive to the System 4–1
Understanding Drive Terms 4–2
Terms for Types of Drives 4–2
Terms for Drive Media 4–2
Caring for Drives 4–3
Inserting or Removing Drive Media 4–4
Inserting a CD or DVD 4–4
Removing a CD or DVD (with Power) 4–5
Removing a CD or DVD (Without Power) 4–6
Inserting a Diskette 4–7
Removing a Diskette 4–7
Using Drive Media 4–8
Avoiding Standby and Hibernation 4–8
Displaying Media Contents 4–8
Caring for Drive Media 4–9
Finding More Drive Software Information 4–10

5 Audio

Adjusting Volume 5–1
Using the Volume Control Icon 5–1
Using the Q Menu 5–2
Using the Internal Speakers 5–3
Using the Internal Microphone 5–4
Connecting an Audio Device 5–5
Identifying Audio Jacks 5–5
Using the Audio-Out Jack 5–6
Using the Headset Jack 5–6
Using the Microphone Jack 5–7
Finding Audio and Video Software Information 5–7

6 Internal Modem

Connecting the Modem 6–2
Selecting Connectors 6–2
Connecting the Modem to an RJ-11 Jack 6–3
Connecting the Modem with an Adapter. 6–4
Setting Country Preferences. 6–5
Displaying the Current Country Configuration 6–5
Adding a Country Configuration. 6–5
Solving Travel Connection Problems 6–6
Accessing Communication Software 6–8
Finding AT Command Information 6–8

7 Network Connections

Connecting the Network Cable 7–2
Turning a Network Connection Off and On 7–3
Using the LAN Connection Lights 7–3
Accessing the Network at Startup 7–4
Enabling a NIC for Startup 7–4
Responding to a Network Service Boot Prompt 7–5
Finding Wireless LAN Information. 7–5

8 External Device Connections

Standard Device 8–1
USB Device 8–2
Tablet PC Keyboard. 8–3
Attaching the Tablet PC to the Keyboard 8–3
Adjusting the Tablet PC and Keyboard. 8–5
Closing the Tablet PC and Keyboard 8–6
Transporting the Tablet PC and Keyboard 8–7
Detaching the Tablet PC from the Keyboard 8–8
Cable Lock 8–10

9 Additional Hardware Options

Obtaining Upgrades 9–1
Using a PC Card. 9–1
Selecting a PC Card. 9–2
Configuring a PC Card 9–2
Inserting a PC Card 9–3
Stopping and Removing a PC Card. 9–3
Using an SD Card. 9–4
Configuring an SD Card 9–5
Inserting an SD Card 9–5
Stopping and Removing an SD Card. 9–6
Increasing Memory 9–7
Displaying Memory Information. 9–7
Removing or Inserting a Memory Module 9–8

10 Maintenance, Shipping and Travel

Maintaining Software. 10–1
Protecting Hardware. 10–2
Using Portfolios. 10–3
Attaching a Portfolio 10–3
Detaching a Portfolio. 10–5
Cleaning Hardware. 10–6
Cleaning the Screen. 10–6
Cleaning a Tablet PC Keyboard 10–7
Replacing Hardware. 10–8
Replacing the System Hard Drive 10–8
Replacing a Pointing Stick Cap. 10–13
Preparing the Tablet PC for Shipping or Travel 10–14
Traveling with the Tablet PC. 10–15
Checklist for Travelers 10–15
Contacting HP 10–16

11 Specifications

Tablet PC and Tablet PC Keyboard Dimensions 11–1
Tablet PC Operating Environment 11–2
Tablet PC Rated Input Power 11–2
Modem Specifications 11–3
Finding More Environmental Information 11–3

Index

1

External Components

Pen Components

Component		Description
❶	Pen tip	Interacts with the tablet PC whenever the tip is touching the screen or within 1.27 cm (0.5 inch) of the screen. When tapped on or held over a pen-activated button, activates the button.
❷	Pen button	Functions like the right button on an external mouse.
❸	Pen tether eyelet	Used with the tether eyelet on the tablet PC, enables you to tether the pen to the tablet PC.

Tablet PC Components

Front: Lights and Bluetooth

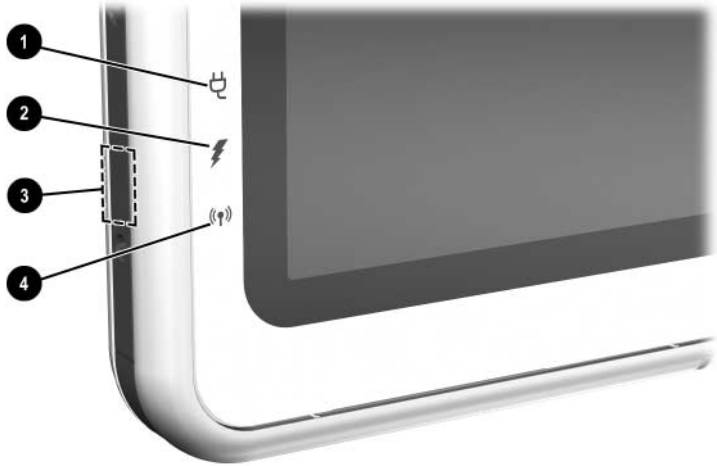

Component		Description
❶	AC adapter light	On: AC power is being supplied through the AC adapter.
❷	Battery light	On: A battery pack is charging. Flashing: A battery pack that is the only available power source has reached a low-battery condition.
❸	Bluetooth antenna	Sends and receives Bluetooth* Integrated Wireless signals.†
❹	Wireless activity light	On: The wireless mini PCI and/or Bluetooth are on. Off: The wireless mini PCI and/ or Bluetooth are off.

*Bluetooth is not available on all models

†For optimal performance when using Bluetooth, keep the area around the antenna free from obstructions.

Front: Pen-Activated Buttons

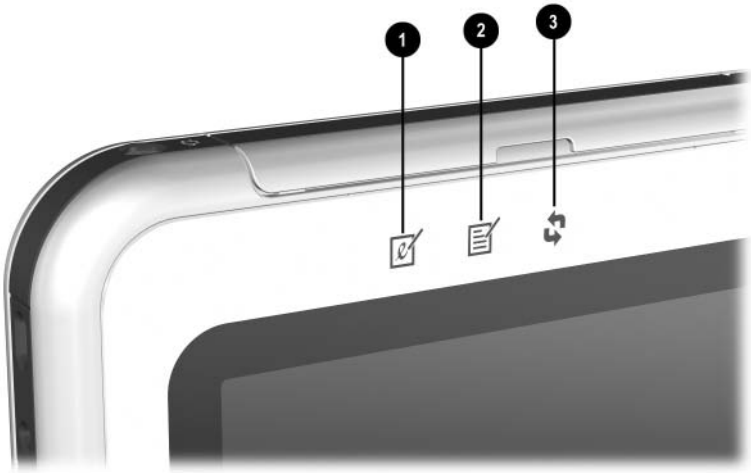

Component		Description
❶	Tablet PC Input Panel launch button*	When Windows is running, opens the Microsoft Tablet PC Input Panel application, which includes a handwriting pad and an on-screen keyboard.
❷	Journal launch button*	When Windows is running, opens and closes the Microsoft Journal application, which supports handwriting.
❸	Rotate button*	Switches the image between landscape and portrait orientation.

*This table describes default settings. For information about changing the functions of the Tablet PC Input Panel launch, Journal launch, and rotate buttons, see Chapter 2, "Pen, Command Controls and Keyboards."

Right Side: Power Switch and Power/Standby Light

Component	Description
❶ Power switch*	When the tablet PC is: ■ Off: Turns on the tablet PC. ■ On: Initiates Standby.* ■ In Standby: Resumes tablet PC from Standby. ■ In Hibernation: Resumes tablet PC from Hibernation.* If the system has stopped responding and Windows shut down procedures cannot be used, slide and hold for 4 seconds to turn off the tablet PC.
❷ Power/standby light	On: Tablet PC is on. Flashing: Tablet PC is in Standby. Off: Tablet PC is off or in Hibernation.

*This table describes default settings. For information about changing the functions of the power switch and about using Standby and Hibernation, refer on this CD to the *Software Guide,* “Power” chapter.

Right Side: Windows Security and Display Toggle Buttons

Component		Description
❶	Windows Security button*	When pressed with the pen tip or a small object like the end of a paper clip while: ■ Windows is open, enters the ctrl+alt+delete command.† ■ The Setup utility is open, enters the reset command.
❷	Display Toggle button	When Windows is running, toggles the external monitor display settings: ■ Internal only ■ Internal and External ■ Extended Desktop

*This table describes default settings. For information about changing the functions of the Windows Security button, see Chapter 2, "Pen, Command Controls and Keyboards."

†To protect your work and the system, the ctrl+alt+delete command cannot be entered using the **Ctrl, Alt,** and **Del** keys on the on-screen keyboard.

Right Side: Esc, Tab and Q Menu Buttons

Component	Description
❶ Esc button*	While the tablet PC is: ■ Starting up and a flashing pointer is displayed on the screen, opens the Setup utility. ■ In Windows, functions like **esc** on a standard keyboard.
❷ Tab button*	When Windows is running, functions like **tab** on a standard keyboard.†
❸ Q menu button*	When Windows is running, opens or closes the Q Menu.

*This table describes default settings. For information about changing the functions of the esc, tab, and Q menu buttons, see Chapter 2, "Pen, Command Controls and Keyboards."

†The tab button can also be used, instead of an F12 command, to respond to a Network Service Boot prompt during startup.

Right Side: Jog Dial and Antenna

Component		Description
❶	Jog dial*	Functions like **enter** and the up and down arrow keys on a standard keyboard. ■ Press inward to enter a command. ■ Rotate upward to scroll upward. ■ Rotate downward to scroll downward.
❷	Antennas, not visible from the outside of the tablet PC	Sends and receives internal wireless LAN signals.†

*This table describes default settings. For information about changing the rotation functions of the jog dial, see Chapter 2, "Pen, Command Controls and Keyboards."

†For optimal performance, keep the antennas free from obstructions while you are using an internal wireless LAN.

Lower Side

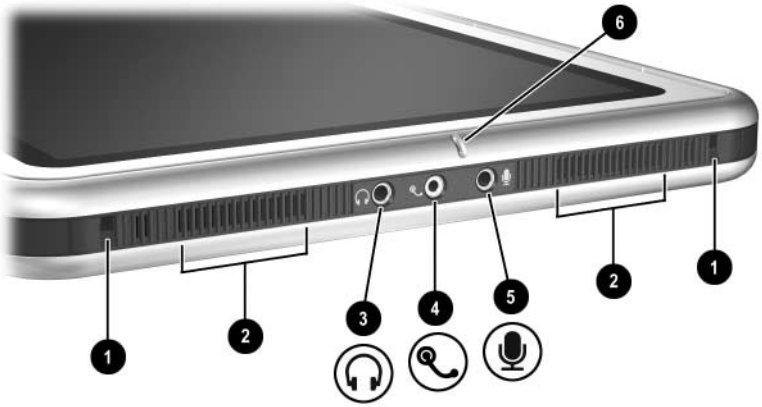

Component		Description
❶	Docking alignment slots (2)	Secure the tablet PC to an optional Tablet PC Docking Station.
❷	Speakers (2)	Produce stereo sound.
❸	Audio-out jack	Connects optional stereo headphones or powered stereo speakers.
❹	Headset jack	Connects an optional headset, such as a mobile telephone headset with a microphone and a monaural ear piece.
❺	Microphone jack	Connects an optional monaural or stereo microphone.
❻	Microphone	Inputs monaural sound.*

*If you are using speech recognition or other software that requires optimal sound quality, you must use an optional external microphone or a headset.

Left Side: Attachment Slots and Keyboard Connector

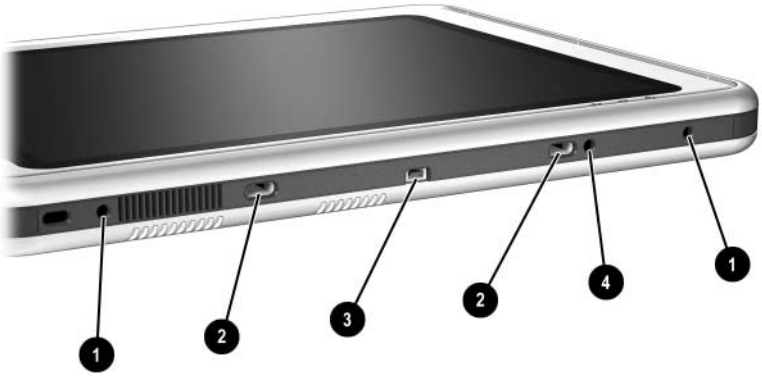

Component		Description
❶	Screen protector slots (2)	Secure the screen protector* when it is attached to the tablet PC.
❷	Universal attachment slots (2)	Secure the portfolio, a screen protector*, or an attachment, such as a tablet PC keyboard, to the tablet PC.
❸	Keyboard connector	Connects the tablet PC keyboard to the tablet PC.
❹	Alignment key slot	Accepts an alignment key to safeguard attachment procedures. For example, matching the alignment key on the tablet PC keyboard to the alignment key slot helps you correctly orient the tablet PC to the keyboard as you attach the tablet PC to the keyboard.

*A screen protector is included with an optional Tablet PC Docking Station.

Left Side: Security Cable Slot, Vent and Antenna

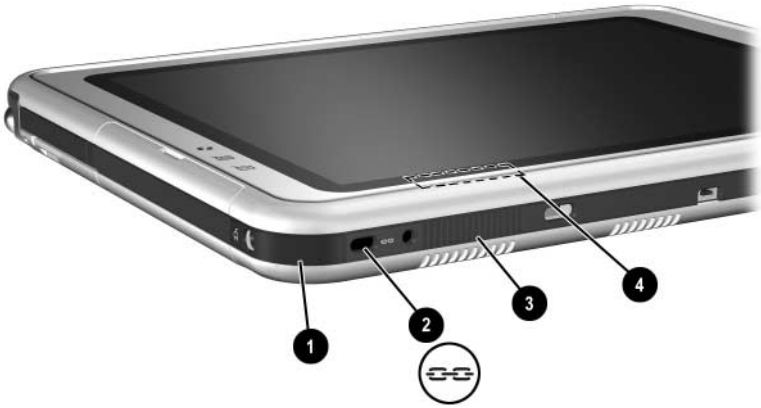

Component		Description
❶	IrDA Fast Infrared Port	Transmits and receives infrared transmissions between the tablet PC and other infrared devices.
❷	Security cable slot	Attaches an optional security cable to the tablet PC.
❸	Vent	Allows airflow to cool internal components. △ To prevent overheating, do not obstruct the vent. Do not allow a hard surface, such as an adjoining optional printer, or fabric, such as bedding or clothing, to block airflow.
❹	Antenna*, not visible from the outside of the tablet PC	Receives internal wireless LAN signals.†

*The tablet PC has 2 antennas. The other antenna is found on the right side of the tablet PC.

†For optimal performance, keep the antennas free from obstructions while you are using an internal wireless LAN.

Top: Connectors and Jacks

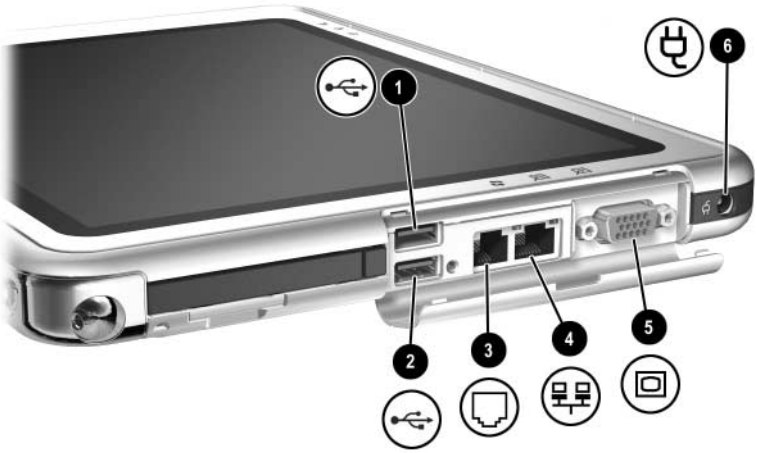

Component		Description
❶	USB connector	Connects an optional USB 2.0- or 1.1-compliant device.*
❷	External MultiBay connector	Connects an optional USB 2.0- or 1.1-compliant device.*
❸	RJ-11 telephone jack	Connects a modem cable.
❹	RJ-45 network jack	Connects an Ethernet network cable.
❺	External monitor connector	Connects an optional VGA external monitor or projector.
❻	AC power connector	Connects an AC adapter or an optional DC cable, Auto/Air Cable, or Automobile Power Adapter/Charger.

*If an optional External MultiBay is connected to the USB connector, the External MultiBay must also be connected to external power. If an External MultiBay is connected to the External MultiBay connector, it is not necessary to connect the External MultiBay to external power.

Top: Pen Holder and LAN Connection Lights

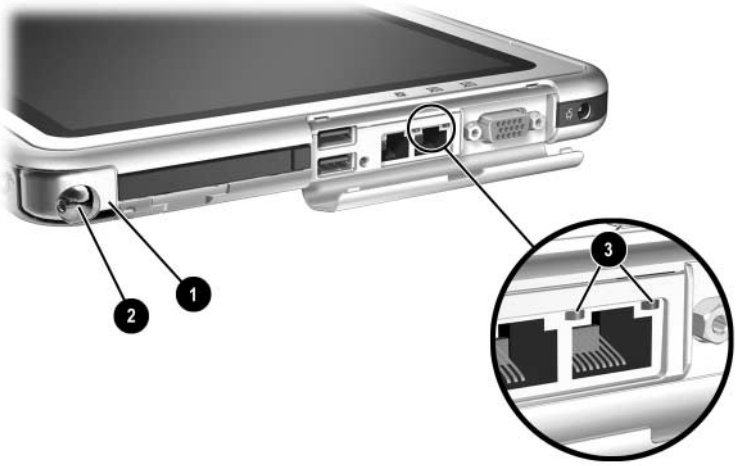

Component	Description
❶ Pen holder (shown with pen ❷ inserted)	Secures the pen to the tablet PC.
❸ LAN connection lights (2)	Both lights off: The tablet PC is not connected to a LAN. Both lights on: The tablet PC is connected to a LAN with a 100 Mbps link. Green light on and yellow light off: The tablet PC is connected to a LAN with a 10 Mbps link.

Top: Card Slots, Buttons and Tether Eyelet

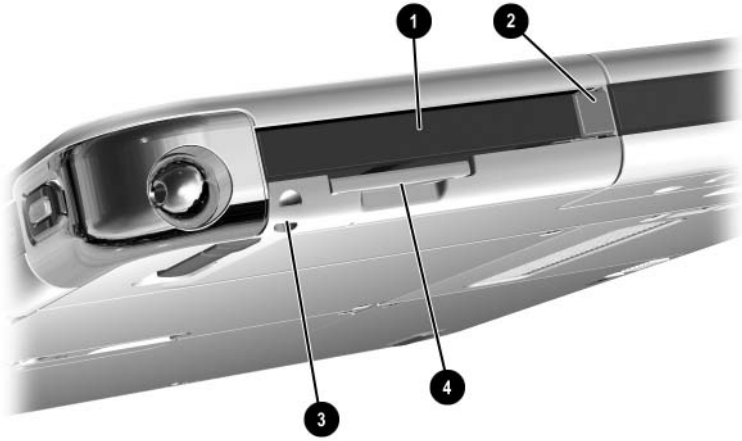

Component		Description
❶	PC Card slot	Supports an optional Type I or Type II 32-bit (CardBus) or 16-bit PC Card.
❷	PC Card eject button	Ejects an optional PC Card from the PC Card slot.
❸	Tablet PC tether eyelet	Used with the tether eyelet on the pen, enables you to tether the pen to the tablet PC.
❹	SD (Secure Digital) Card slot	Supports an optional SD Card.

Back: Attachment Features and Hard Drive Bay

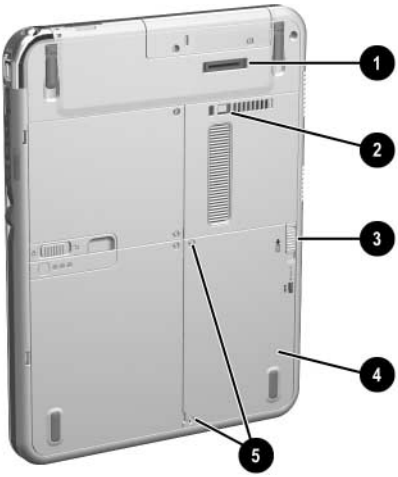

Component		Description
❶	Docking connector	Connects the tablet PC to an optional Docking Station.
❷	Docking restraint latch recess	Accepts the docking restraint latch on an optional Docking Station to secure the tablet PC to the Docking Station.
❸	Attachment release switch	Releases an attachment, such as the portfolio, a screen protector*, or an optional tablet PC keyboard, from the universal attachment slots on the tablet PC.
❹	Hard drive bay	Holds the system hard drive.
❺	Hard drive bay retaining screws (2)	Secure the hard drive bay cover to the tablet PC.

*A screen protector is included with an optional Tablet PC Docking Station.

Back: Battery Bay

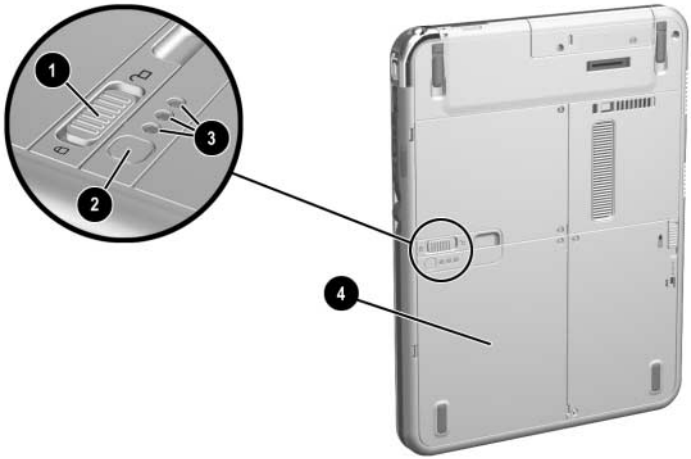

Component		Description
❶	Battery pack release latch	Releases the battery pack from the battery bay.
❷	Battery quick check button on battery pack*	Activates the battery quick check lights (see below) which display how much charge remains in the battery pack.
❸	Battery quick check lights (3) on battery pack*	On: Each light represents a percent of a full charge. For example, when all 3 lights are on, the battery pack is fully charged. Flashing: When one light is flashing, less than 5 percent of a full charge remains in the battery pack.
❹	Battery bay	Holds the battery pack. Also, contains one battery pack security screw.*

*This illustration shows the battery pack inserted in the battery bay. The battery pack is included with the tablet PC, but is not inserted. For insertion instructions and information about using a battery pack security screw for protection against theft, see Chapter 3, "Battery Packs."

Back: Memory and Mini PCI Compartment

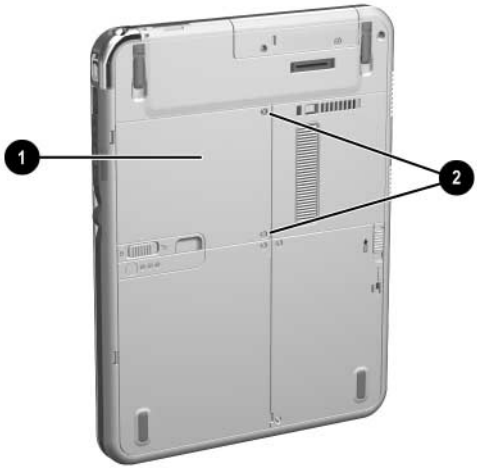

Component		Description
❶	Memory and mini PCI (Peripheral Component Interconnect) compartment, not visible from the outside of the tablet PC	Contains one memory slot for a PC133-compliant memory module. Also, holds an optional mini PCI board such as a wireless board. (A mini PCI board is included with some tablet PC models.) △ The FCC does not allow unauthorized mini PCI devices to be used in the tablet PC. Installing an unsupported mini PCI device can prevent your tablet PC from operating properly and may result in a warning message. To resume proper operation, remove the unauthorized device. Contact your HP Customer Care Center if a warning message about your mini PCI device displays in error.
❷	Memory and mini PCI compartment retaining screws (2)	Secure the memory and mini PCI compartment cover to the tablet PC.

Back: Labels

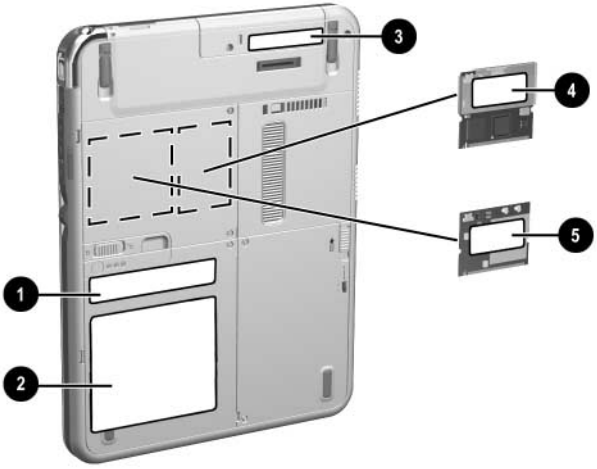

Component		Description
❶	Microsoft Certificate of Authenticity label (inside the battery bay)	Contains the Product Key number. You may need this number to update or troubleshoot the operating system.
❷	System label	Provides regulatory information about the tablet PC.
❸	Product identification label	Contains the serial number of the tablet PC and a code describing the original configuration of the tablet PC. You will need the serial number if you call HP Customer Care.
❹	Modem approvals label	Lists the countries in which the modem has been approved for use.*
❺	Wireless certification label (on mini PCI wireless device)	Lists the countries in which the wireless device has been approved for use.*

*You may need this information when traveling.

Back: Tilt Feet and Pad Feet

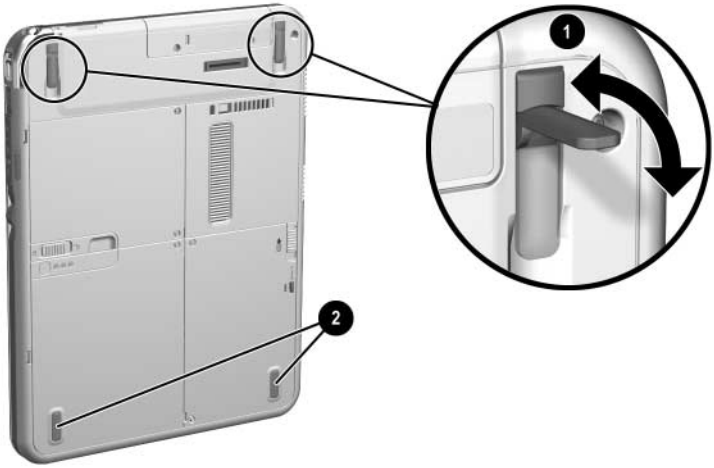

Component	Description
❶ Tilt feet (2)	While the tablet PC is being used in portrait orientation as a free-standing tablet, can elevate the top of the tablet PC to provide a comfortable writing and viewing angle.
❷ Pad feet (2)	Stabilize the tablet PC when the tablet PC is placed as a free-standing tablet on a flat surface.

Additional Tablet PC Standard Components

The components included with the tablet PC vary by geographical region and the tablet PC hardware ordered. The following illustrations and tables identify the standard external components included with most tablet PC models.

These illustrations do not include supplementary documentation, supplementary CDs, the portfolio that shipped attached to the tablet PC or an optional keyboard, or optional devices such as PC Cards or drives. The system hard drive ships inside the hard drive bay.

Documentation CDs

Among the CDs included are:

- *Documentation Library* CD, which includes product-specific documentation for the tablet PC, along with modem, networking, safety, and regulatory information.

  For information about using the *Documentation Library* CD, refer to the printed *Startup Guide* included with the tablet PC.
- *Documentation Library Wireless LAN* CD, which includes documentation on the wireless devices available for the tablet PC.
- *Documentation Library Bluetooth* CD, which includes the guides and software for Bluetooth wireless connection.

Wireless information may vary depending upon the exact configuration of your tablet PC.

Cords and Cables

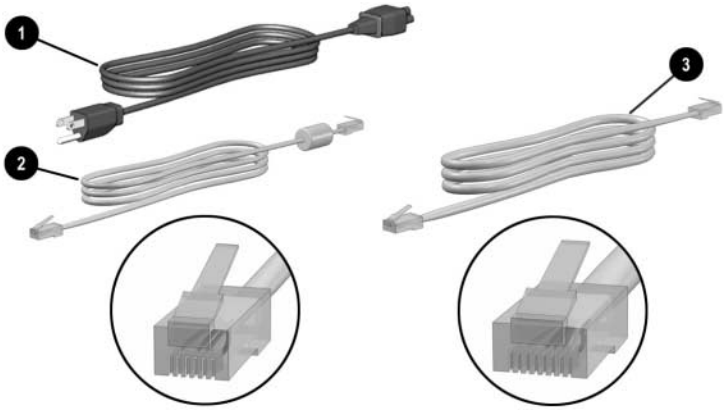

Component		Description
❶	Power cord*	Connects the AC adapter to an AC electrical outlet.
❷	Modem cable	Connects the modem to an RJ-11 telephone jack or to a country-specific modem adapter. ✎ The modem cable has a *6-pin* RJ-11 telephone connector at each end.
❸	Network cable	Connects the tablet PC to an RJ-45 (Ethernet network) jack. (A network cable is included with network models only.) ✎ The network cable has an *8-pin* RJ-45 network connector at each end.

*Power cords vary in appearance by region.

Adapters and Accessories

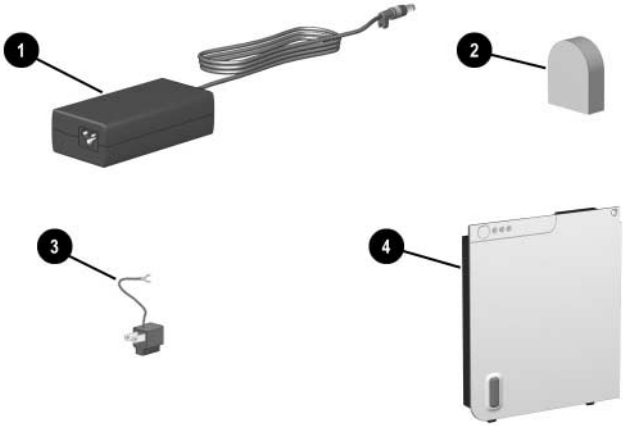

Component		Description
❶	AC adapter*	Converts AC power to DC power.
❷	Country-specific modem adapter (included by region as required with modem models only)	Adapts the modem cable to a non-RJ-11 telephone jack.
❸	Japan-specific outlet adapter (Japan only)	Connects the AC adapter to a 2-prong electrical outlet.
❹	Battery pack	Runs the tablet PC when the tablet PC is not connected to external power.

*AC adapters vary in appearance by region. The only AC adapter that should be used with the tablet PC is the AC adapter included with the tablet PC or a replacement AC adapter provided by HP.

Tablet PC Keyboard Components

This section identifies the hardware components of an optional tablet PC keyboard.

- For information about detaching, attaching, and adjusting the keyboard, see Chapter 8, "External Device Connections."
- For information about using the keyboard, see Chapter 2, "Pen, Command Controls and Keyboards."

Front: Lights and Pointing Device

Component		Description
❶	Num lock light	On: The keypad is on.
❷	Caps lock light	On: Caps lock is on.
❸	Pointing stick	Moves the pointer and selects and activates items on the screen.
❹	Left and right pointing stick buttons	Function like the left and right buttons on an external mouse.

Front: Keys

Component		Description
❶	Function keys (11)	Perform system and application tasks. For example, in Windows and many applications, pressing **F1** opens a Help file. ■ To enter an F11 function, press **F11/F12.** ■ To enter an F12 function, press **Fn+F11/F12.**
❷	**Fn**	Combines with other keys to perform system tasks. For example, pressing **Fn+num lk** turns on the keypad.
❸	Keypad keys (15)*	Can be used like the keys on an external numeric keypad.
❹	Microsoft logo key	Displays the Windows Start menu.
❺	Applications key	Displays a shortcut menu for an item beneath the pointer.

*For more information about using keypad keys, see Chapter 2, "Pen, Command Controls and Keyboards."

Front: Positioning and Security Features

Component		Description
❶	Rotation disk	Rotates the tablet PC while it is attached to the keyboard.
❷	Docking alignment notches (4)	Help guide the tablet PC and keyboard into an optional Docking Station.
❸	Keyboard latch	When the tablet PC and keyboard are closed, locks the tablet PC to the keyboard: ■ Slide to the right to lock the tablet PC to the keyboard. ■ Slide to the left to unlock the tablet PC from the keyboard.

Top

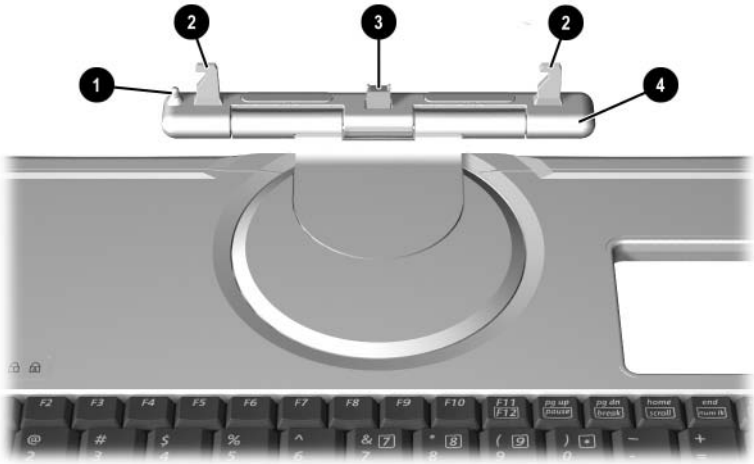

Component		Description
❶	Alignment key	Inserts into the alignment key slot on the tablet PC to safeguard attachment procedures. For example, matching the alignment key to the alignment key slot on the tablet PC helps you correctly orient the tablet PC to the keyboard as you attach the tablet PC to the keyboard.
❷	Keyboard hooks (2)	Secure the tablet PC to the keyboard.
❸	Keyboard connector	Connects the tablet PC to the keyboard.
❹	Tilt adjustment	Tilts the tablet PC upward or downward while it is connected to the keyboard.

Back

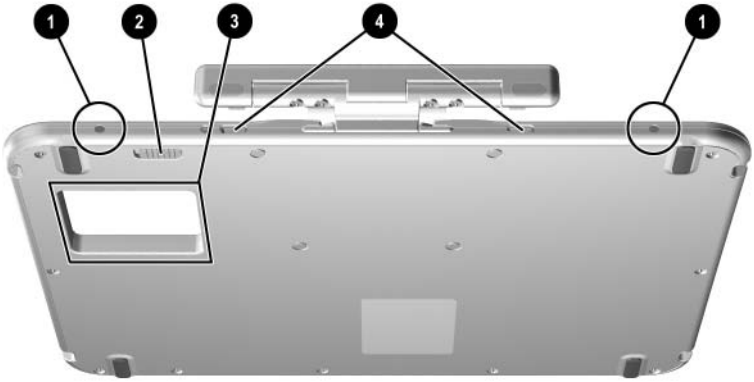

Component		Description
❶	Screen protector slots (2)	Secure a screen protector* to the keyboard.
❷	Attachment release switch	Releases attachments, such as the portfolio, a screen protector*, or the tablet PC, from the keyboard.
❸	Docking connector pass-through	Allows the tablet PC to be connected to an optional Docking Station while the tablet PC is attached to the keyboard.
❹	Universal attachment slots (2)	Secure the portfolio, a screen protector*, or the tablet PC to the keyboard.

*A screen protector is included with an optional Tablet PC Docking Station.

Additional Keyboard Standard Component

Component	Description
Spare pointing stick caps (2)	Replace a worn pointing stick cap.

2

Pen, Command Controls and Keyboards

You can enter and access information on the tablet PC by voice (supported in English only), pen, command controls, the on-screen keyboard, or the tablet PC keyboard or external USB keyboard. An optional external mouse can be connected to a USB connector on the tablet PC, an optional Docking Station, or some external USB keyboards.

This chapter provides information about using the pen, command controls, the on-screen keyboard, and a tablet PC keyboard.

Pen

You can write with the pen in pen-specific applications such as Journal and Tablet PC Input Panel, in all Microsoft Office applications, and in most other Windows applications and utilities. The information you write on the screen with the pen can be filed, searched, and shared among most Windows applications.

- To access basic information about using the pen within the operating system, refer to the printed *Windows XP Tablet PC Edition Start Here* guide included with the tablet PC.
- To access on-screen tutorials which include more detailed information about using the pen in the tablet PC system:
  1. Open Windows Explorer. To open Windows Explorer from the Start button, select Start > All Programs > Accessories > Windows Explorer.
  2. In Windows Explorer, select My Computer > Local Disk (C:) > WINDOWS > Help > latute.hta.

Entering Information with the Pen

Identifying the Pen Tip and Pen Button

The pen interacts with the tablet PC whenever the tip of the pen ❶ is within 1.27 cm (0.5 inch) from the screen. The pen button ❷ emulates the functions of the right-click button on an external mouse.

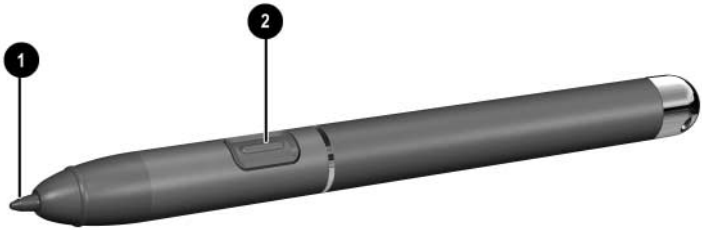

Identifying the pen tip and pen button

Holding the Pen

Hold the pen as if you were writing with a standard pen or pencil. Position your hand on the pen so that you will not accidentally press the pen button.

As you monitor the movements of the pen, focus on the pointer, not on the tip of the pen.

Performing Mouse Clicks with the Pen

To select an item on the screen as you would with the left button of an external mouse:

» Tap the item with the tip of the pen.

To double-click an item on the screen as you would with the left button of an external mouse:

» Tap the item twice with the tip of the pen.

To select an item as you would with the right button of an external mouse:

» Press and hold down the pen button, then tap the item with the tip of the pen.

Performing Other Procedures with the Pen

In addition to emulating mouse clicks, the pen can be used for the following tasks:

- To display the pointer location, hold the pen tip immediately over any location on the tablet PC screen without touching the screen with the pen tip.
- To display the menu options related to an item on the screen, tap the screen with the pen tip.
- To write with the pen, write on the screen with the tip of the pen.
- To press a pen-activated button, tap the button with the tip of the pen.

Pressure-Sensitivity

The tablet PC pen is equipped with a pressure-sensitive feature. This means that you can manipulate the pen to create lines of various thickness, depending upon the amount of pressure you use to write.

Calibrating the Pen

The pen can function at the default calibration or at a calibration set by another user. However, HP highly recommends that you use the pen only while it is calibrated to your personal handwriting and mouse action motions. Calibration optimizes pen performance for all users and particularly for left-handed users.

To calibrate the pen:

1. Select Start > Control Panel > Printers and Other Hardware icon > Tablet and Pen Settings window > Settings tab.
2. Select the Calibrate button.
3. Follow the instructions on the screen.
   - ❏ Tap the pen in the exact center of each of the calibration markers. The calibration markers are displayed on the screen as plus signs (+).
   - ❏ Be sure to calibrate the pen for use in both portrait and landscape orientations.

✎ You can display information about any setting in the Tablet and Pen Settings window by selecting the question mark button in the upper right corner of the window, then selecting a setting. A definition, explanation, or procedure is displayed.

Using the Pen Holder

To protect the pen when you are not using it, insert the pen, tip first, into the pen holder on the tablet PC.

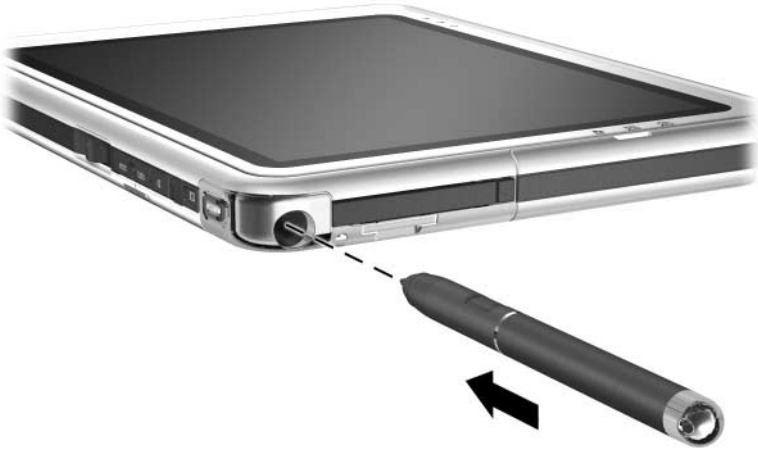

Inserting the pen into the pen holder

Setting Pen Preferences

Pen preferences are set in the Tablet and Pen Settings window of the operating system. The preferences include settings that optimize handwriting recognition and the location of on-screen menus for either right-handed or left-handed users. To access the pen settings:

» Select Start > Control Panel > Printers and Other Hardware icon > Tablet and Pen Settings window > Pen Options tab.

The preferences you set in the Tablet and Pen Settings window are specific to the pen and the tablet PC.

Pointing device preferences, such as pointer speed, click speed, and mouse trails, that apply to any pointing device in the system, are set in the Mouse Properties window. For instructions, see "Setting Pointing Device Preferences" in the "Tablet PC Keyboard" section later in this chapter.

Command Controls

The 9 command controls enable you to enter commands usually entered with keyboard keys while you are using the tablet PC without an external keyboard. The command controls can also be used while you are using the on-screen keyboard or an optional keyboard.

Identifying Command Controls

❶ Tablet PC Input Panel launch button

❷ Journal launch button

❸ Rotate button

❹ Display Toggle button

❺ Q menu button

❻ Tab button

❼ Windows Security button

❽ Esc button

❾ Jog dial

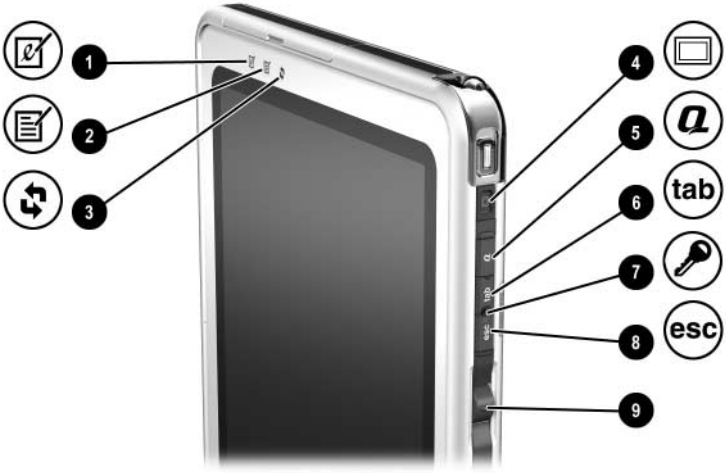

Identifying the command controls

Command Controls Quick Reference

The following table identifies the default setting and activation procedure for each command control.

- To activate a pen-activated button, tap the button with the tip of the pen.
- To activate a manually activated button, press and release the button.

Button	Default Function	Activation
Tablet PC Input Panel launch button*	Opens and closes the Tablet PC Input Panel application, which includes a writing pad and the on-screen keyboard.	Pen
Journal launch button*	Opens and closes the Journal application.	Pen
Rotate button*	Switches the image between landscape and portrait orientation.	Pen
Display Toggle button	When Windows is running, toggles the external monitor display settings: ■ Internal only ■ Internal and External ■ Extended Desktop	Manual
Q menu button*	Opens and closes the Q Menu.	Manual
Tab button*	Functions like **tab** on a standard keyboard.	Manual

(Continued)

Button	Default Function	Activation
Windows Security button*	In Windows, functions like the ctrl+alt+delete command on a standard keyboard. In the Setup utility, functions like the reset button on some computers.	Manual
Esc button*	During startup, opens the Setup utility. In Windows, functions like **esc** on a standard keyboard.	Manual
Jog dial*	Enters commands or scrolls the image upward or downward.	Manual

*These controls are programmable. For instructions, see "Setting Command Control Preferences," later in this chapter.

Using Command Controls

Tablet PC Input Panel Launch Button

Tap the Tablet PC Input Panel launch button with the pen tip when the tablet PC is in Windows to open the Tablet PC Input Panel application. The Tablet PC Input Panel application displays a keyboard on the screen and can also display a writing pad, which supports handwriting.

To protect your work and the system, the ctrl+alt+delete command cannot be entered using the **Ctrl, Alt,** and **Del** keys on the on-screen keyboard. To enter the ctrl+alt+delete command, press the Windows Security button on the tablet PC with the pen tip or a small object like the end of a paper clip.

For more information about using the Tablet PC Input Panel application, refer to the Help file within the application, the "On-Screen Keyboard" section, later in this chapter, or to an on-screen tutorial. To access the tutorials:

1. Open Windows Explorer. To open Windows Explorer from the Start button, select Start > All Programs > Accessories > Windows Explorer.
2. In Windows Explorer, select My Computer > Local Disk (C:) WINDOWS > Help > latute.hta.

Journal Launch Button

Tap the Journal launch button with the pen tip to open the Journal application. The Journal application is a handwriting program unrelated to the Journal feature in Microsoft Outlook.

For more information about using the Journal application, refer to the Help file within the application or to an on-screen tutorial. To access the tutorials:

1. Open Windows Explorer. To open Windows Explorer from the Start button, select Start > All Programs > Accessories > Windows Explorer.
2. In Windows Explorer, select My Computer > Local Disk (C:) WINDOWS > Help > latute.hta.

Rotate Button

Tap the rotate button with the pen tip when the tablet PC is in Windows to rotate the image on the screen 90 degrees. For example, if the image is in landscape orientation, tap the rotate button to rotate the image to portrait orientation.

Display Toggle Button

Press the Display Toggle button to adjust the display settings for the tablet PC and the optional external monitor.

When Windows is running, the Display Toggle button toggles the external monitor display settings in the following order:

- Internal only
- Internal and External
- Extended Desktop

Q Menu Button

Press the Q menu button manually when Windows is running to open or close the Q Menu. The Q Menu provides quick access to programmable tasks and destinations including:

- System controls, such as volume and screen brightness.
- Key simulations such as Capture Screen, which functions like the **print screen** key on a standard keyboard.
- Applications, files, or folders on a drive, a network, or the Internet.

To select an item from the Q Menu without using the pen or a keyboard, press the Q menu button to display the Q Menu, rotate the jog dial upward or downward until your selection is highlighted, then press the jog dial inward.

For more information about using the Q Menu, refer on this CD to the *Software Guide,* “Q Menu and Desktop Video Profiles ” chapter.

Tab Button

Press the tab button manually to enter the tab command as you would by pressing the **tab** key on a standard keyboard. The tab button can be used with or without the on-screen keyboard or an optional keyboard.

The function of the tab command varies by application. For example, in Microsoft Word the tab command indents and in Microsoft Excel the tab command moves the pointer to an adjoining cell.

The tab button can be combined with keystrokes on the on-screen keyboard or an external keyboard. For example, press the **alt** key on either keyboard, then the tab button, to display and select from among all open applications.

Windows Security Button

Press the Windows Security button with the pen tip or a small object like the end of a paper clip to enter the ctrl+alt+delete command while you are in Windows or the reset command while you are in the Setup utility. The ctrl+alt+delete command cannot be entered using the **Ctrl, Alt,** and **Del** keys on the on-screen keyboard.

Ctrl+Alt+Delete Command

When the tablet PC is in Windows, the Windows Security button clears your work from the screen and displays the Windows Security window in which you can lock, log off, or shut down the tablet PC, initiate Standby or Hibernation, or open Task Manager.

- The Shut Down option in the ctrl+alt+delete window enables you to safely shut down the tablet PC if the system has become unresponsive.
- Task Manager displays the status of all open applications and enables you to close an application that has become unresponsive.

If the system remains unresponsive after selecting Shut Down in the Windows Security window, slide and hold the power switch for 4 seconds. For additional shut down procedures, refer on this CD to the *Software Guide,* "Power" chapter. For information about using the ctrl+alt+delete command in non-Windows applications, refer to the application documentation.

Reset Command

When the Setup utility is open, the Windows Security button simulates the reset button found on some computers. When the tablet PC is reset, the tablet PC restarts and all unsaved information is lost.

The reset function can be used to restore functionality when the system has become unresponsive. For information about the Setup utility, which is a non-Windows utility, refer on this CD to the *Software Guide,* "Setup and Support Utilities" chapter.

Esc Button

Press the esc button manually to open the Setup utility or to use the esc button like the **esc** key on a standard keyboard.

Setup Utility Function

While the tablet PC is starting up, the HP logo is displayed and the cursor flashes in the upper right hand corner of the screen. During this time, press the esc button to open the Setup utility. For information about the Setup utility, refer on this CD to the *Software Guide,* "Setup and Support Utilities" chapter.

Esc Key Function

When the tablet PC is on, press the esc button to enter the esc command as you would by pressing the **esc** key on a standard keyboard. The esc button can be used with or without the on-screen keyboard or an external keyboard.

The function of the esc command varies among applications. Esc is usually used to exit a mode or routine or to cancel a function.

The esc button can be combined with keystrokes on the on-screen keyboard or an external keyboard. For example, press the **ctrl** key on either keyboard, then the esc button, to display the Windows Start menu.

Jog Dial

Press or rotate the jog dial manually to enter commands or scroll vertically:

- Press inward to simulate the function of the **enter** key on a standard keyboard.
- Rotate upward or downward to scroll toward the top or bottom of an image.

At the default setting, the jog dial scrolls line by line like the up and down arrow keys on a standard keyboard. The jog dial can be set to scroll page by page like the page up and page down keys on a standard keyboard or three lines at a time like a mouse wheel. Other settings, in addition to scroll functions, are also available. For instructions, see "Setting Command Control Preferences," next in this chapter.

Setting Command Control Preferences

All command controls except the Display Toggle button and the enter function of the jog dial can be customized to launch applications, simulate key combinations, or perform preset system functions.

Each programmable command control can be assigned to 4 settings. Each setting applies only to 1 of 4 views:

- Portrait-Primary
- Portrait-Secondary
- Landscape-Primary
- Landscape-Secondary

Command control preferences are set in the Tablet and Pen Settings window. You must select a view before setting a preference. Each view is illustrated in the Button Location pane of the Tablet and Pen Settings window as you select it.

If you are unfamiliar with the four views, you may want to read "Selecting a View" next in this section, before setting a command control preference.

Selecting a View

In the Portrait-Primary and Portrait-Secondary views, the image is displayed vertically, in portrait orientation. In the Landscape-Primary and Landscape-Secondary views, the image is displayed horizontally, in landscape orientation.

- A portrait view is often optimal when you are using the tablet PC as a handheld.
- A landscape view is often optimal when you are displaying the image on an optional external monitor or projector.

In the primary views (Portrait-Primary and Landscape-Primary), the image switches clockwise between vertical and horizontal. In the secondary views (Portrait-Secondary and Landscape-Secondary), the image switches counterclockwise between vertical and horizontal.

- Left-handed users may find the secondary views more convenient.
- HP recommends that you not use a secondary view while using the internal wireless. The positions commonly occupied by the tablet PC, external devices, and users while the tablet PC is in a secondary view may obstruct the antennas.

  When you are facing the tablet PC screen with the tablet PC in portrait orientation, the antennas, not visible from the outside of the tablet PC, are on the right and left sides of the tablet PC, near the upper corners.

To switch the system among the Portrait-Primary, Landscape-Primary, Portrait-Secondary, and Landscape-Secondary views:

1. Press the Q menu button.
2. Select a view from the Q Menu. (The system switches to the view you select.)

For more information about using the Q Menu, including instructions for adding or removing items from the Q Menu, refer on this CD to the *Software Guide,* “Q Menu and Desktop Video Profiles” chapter.

Assigning or Changing a Preference

To assign or change the function of a programmable command control:

1. Select Start > Control Panel > Printers and Other Hardware icon > Tablet and Pen Settings window > Tablet Buttons tab.
2. In the Button Settings For field, select the view in which you want to use your preference. (The view is illustrated in the Button Location panel.)
3. In the Tablet Button drop-down list, select the button you plan to assign.
   - ❏ To assign or change the function of rotating the jog dial upward, select Up.
   - ❏ To assign or change the function of rotating the jog dial downward, select Down.
4. Select the Change button. (The Button Action dialog box opens.)
5. Select your preference in the Button Action dialog box. To save your preference, select the OK or Apply button.

Returning All Command Controls to Default Settings

To return the settings on *all* command controls to their default settings:

1. Select Start > Control Panel > Printers and Other Hardware icon > Tablet and Pen Settings window > Tablet Buttons tab.
2. In the Button Settings For field, select the view in which you want to change all command controls to their default settings.
3. Select the Reset button. (All command controls are returned to their default settings only in the orientation currently selected.)
4. Select the Apply button, then select OK.

On-Screen Keyboard

The Tablet PC Input Panel application displays a keyboard on the screen. This on-screen keyboard simulates the functions of an optional keyboard.

To open the Tablet PC Input Panel application, tap the Tablet PC Input Panel launch button ❶ with the pen.

- To type, tap a key.
- To switch the keys displayed in the top row between number keys and function keys, tap **Func.**
- To enter the ctrl+alt+delete command, press the Windows Security button ❷ on the tablet PC with the pen tip or a small object like the end of a paper clip. To protect your work and the system, the ctrl+alt+delete command cannot be entered using the **Ctrl, Alt,** and **Del** keys on the on-screen keyboard.

For more information about using the Tablet PC Input Panel application, see "Tablet PC Input Panel Launch Button" in the "Using Command Controls" section, earlier in this chapter.

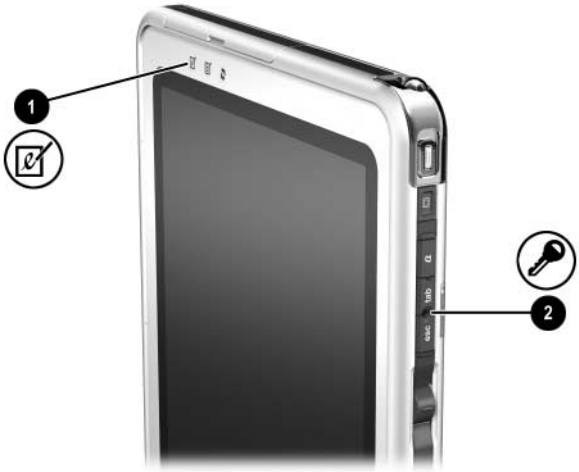

Identifying the Tablet PC Input Panel launch and Windows Security buttons

Tablet PC Keyboard

An optional tablet PC keyboard that is thinner than the tablet PC but the same length and width is available from your HP authorized dealer, reseller, or service provider.

When the tablet PC is attached to the keyboard, the tablet PC can be folded down flush with the keyboard for transport or tilted upward and used like a notebook display.

This chapter provides information about using the keyboard pointing device and keypad.

- For information about identifying other keyboard components, see Chapter 1,"External Components."
- For information about attaching, detaching, and positioning the keyboard, see Chapter 8, "External Device Connections."

Using the tablet PC and tablet PC keyboard like a notebook

Using the Pointing Device

Navigating and Selecting

To move the pointer, press the pointing stick ❶ in the direction you want to move the pointer. To increase or decrease pointer speed, increase or decrease the directional (not downward) pressure on the pointing stick. If the pointer continues to move after you release the pointing stick, wait a few seconds and the pointer will stop moving.

Use the left ❷ and right ❸ pointing stick buttons as you would the left and right buttons on an external mouse.

For information about replacing the pointing stick cap with one of the two spare pointing stick caps included with the keyboard, see Chapter 10, "Maintenance, Shipping and Travel."

Identifying pointing device components

Setting Pointing Device Preferences

Pointer speed, click speed, mouse trails, and other pointing device preferences can be set in the Mouse Properties window of the operating system. To access Mouse Properties, select Start > Control Panel > Printers and Other Hardware icon > Mouse icon.

To learn more about a setting, select the question mark icon in the upper right corner of the window, then select the setting. To select a setting, follow the instructions on the screen, then select the OK button.

Mouse Properties settings apply to any pointing device in the system, including the pen, an optional mouse, and the pointing device on an optional tablet PC keyboard.

Using the Keypad

The tablet PC keyboard includes 15 keys that can be used like the keys on an external numeric keypad. When the keypad is turned on, each of these 15 keys performs the functions indicated by the icon in the upper right corner of the key. The standard functions of the keypad keys can still be accessed while the keypad is turned on.

Identifying the keypad keys

Turning the Keypad On and Off

Press **Fn+num lk** ❶ on the keyboard to turn the keypad on and off.

- When the keypad is on, press **Fn+num lk** ❶ to turn the keypad off. The num lock light ❷ turns off.
- When the keypad is off, press **Fn+num lk** ❶ to turn the keypad on. The num lock light ❷ turns on.

Identifying the Fn and num lk keys and the num lock light

Switching Keypad Keys Between Standard and Keypad Functions

You can temporarily switch the functions of keypad keys between their standard keyboard functions and their keypad functions by using **Fn** ❶ and **shift** ❷.

- To use a key on the keypad temporarily as a keypad key while the keypad is off, press and hold **Fn** as you press the key.
- To use a keypad key temporarily as a standard key while the keypad is on:
  - ❑ Press and hold **Fn** to type in lowercase.
  - ❑ Press and hold **Fn+shift** to type in uppercase.

When **Fn** is released, the keypad keys return to their standard functions if the keypad is off or to their keypad functions if the keypad is on.

Identifying the Fn and shift keys

Using F11/F12

F11/F12 provides both F11 and F12 functions.

- To enter an F11 function, press **F11/F12** ❶.
- To enter an F12 function, press **Fn+F11/F12** ❷.

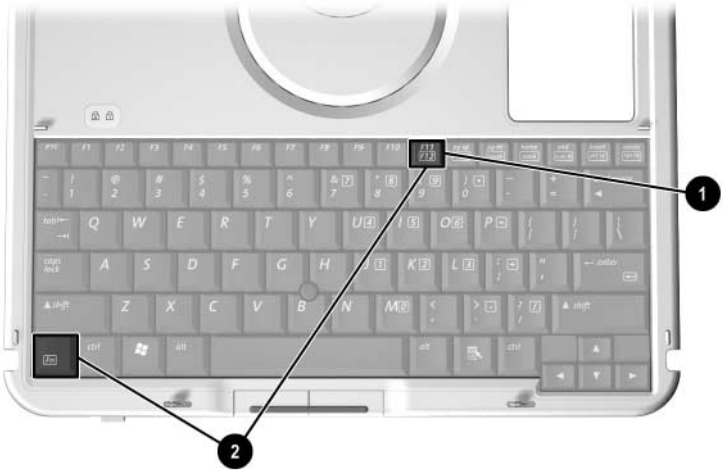

Identifying the F11/F12 and Fn keys