7

Network Connections

The tablet PC has an RJ-45 network jack. Network tablet PC models also have an internal NIC (network interface card), preinstalled network drivers, and a network cable.

The tablet PC can be connected to a network whether or not the internal modem is connected to a telephone line.

If your tablet PC is connected to a network, you may want to confer with your network administrator before changing network settings.

The tablet PC supports network speeds up to 10 Mbps when connected to a 10BaseT network and 100 Mbps when connected to a 100BaseTX network.

Connecting the Network Cable

A network cable has an 8-pin RJ-45 network connector at each end and may contain noise suppression circuitry, which prevents interference with TV and radio reception.

1. To access the tablet PC RJ-45 network jack ❶, open the upper panel of the tablet PC.
2. Orient the end of a network cable with noise suppression circuitry ❷ toward the tablet PC.
3. Plug the network cable into the tablet PC RJ-45 network jack ❸.
4. Plug the other end of the cable into the network RJ-45 jack ❹.

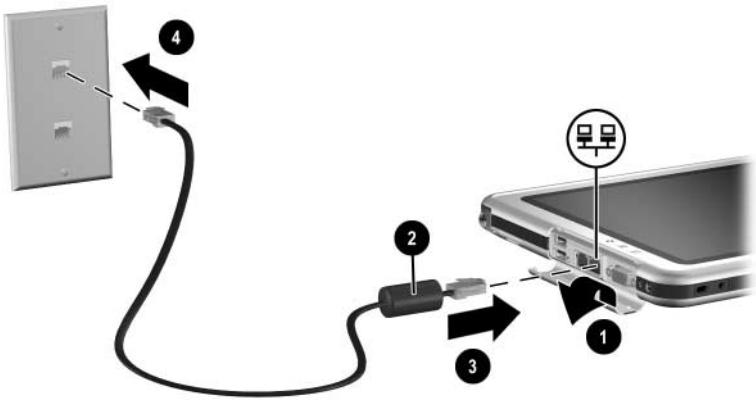

Connecting a network cable

WARNING: To reduce the risk of electric shock, disconnect the network cable before accessing an internal compartment of the tablet PC. Internal compartments include the memory and mini PCI compartment and the hard drive bay.

Turning a Network Connection Off and On

To conserve power, turn off a network connection you are not using.

- To turn off a network connection, log off the network, then disconnect the network cable.
- To turn on a network connection, connect the network cable, then log on to the network.

Using the LAN Connection Lights

The 2 LAN connection lights indicate the status of a network connection:

- Both lights off: The tablet PC is not connected to a LAN.
- Both lights on: The tablet PC is connected to a LAN with a 100 Mbps link.
- Green light on and yellow light off: The tablet PC is connected to a LAN with a 10 Mbps link.

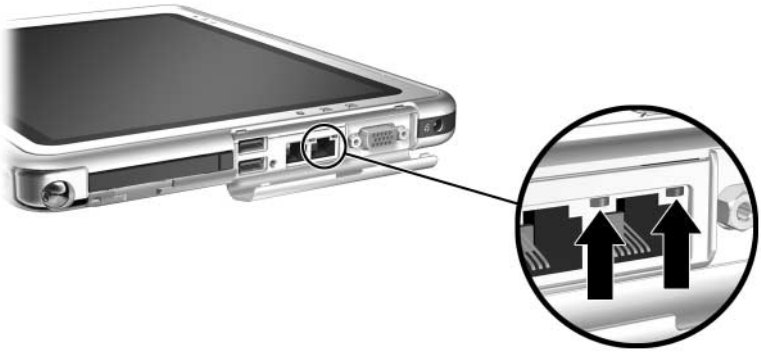

Identifying the LAN connection lights

Accessing the Network at Startup

To connect to a PXE (Preboot eXecution Environment) or RPL (Remote Program Load) server during startup, you must respond to the Network Service Boot prompt each time you want to connect to the server as the tablet PC starts or restarts.

To set the tablet PC to display the Network Service Boot prompt each time it is started or restarted, you must enable the internal NIC for startup.

Enabling a NIC for Startup

An internal NIC is enabled for startup in the Setup utility.

1. To open the Setup utility, turn on or restart the tablet PC. While the HP logo is displayed and a cursor is flashing in the upper right corner of the screen, press the esc button on the tablet PC or press **F10** on an optional keyboard.
2. To change the language, select Advanced > Languages.
   - ❏ To navigate and select without using an optional keyboard, rotate the jog dial to scroll and press the jog dial inward to select.
   - ❏ To navigate and select using an optional keyboard, use the arrow and **enter** keys.
3. Select Advanced menu > I/O Device Configuration, then enable PXE/Remote Boot.
4. To save your preference and exit the Setup utility, select File > Save Changes and Exit, then follow the instructions on the screen.

Your preference is set as you exit the Setup utility and is in effect when the tablet PC restarts.

Responding to a Network Service Boot Prompt

After the internal NIC has been enabled for startup, the Network Service Boot prompt is displayed very briefly in the lower right corner of the screen each time the tablet PC is started or restarted.

To connect to a network by responding to the prompt, use either of the following procedures:

- Press the tab button on the tablet PC.
- Press **F12** on an optional keyboard. To press F12 on the tablet PC keyboard, press **Fn+F11/F12.**

Finding Wireless LAN Information

The tablet PC supports wireless LAN provided through a mini PCI board, a PC Card, or an SD Card. A wireless LAN PC Card or an SD Card is optional. A wireless mini PCI board may be preinstalled.

- Information about using a preinstalled wireless LAN board is provided on the *Documentation Library Wireless LAN* CD included with your tablet PC.
- Information about the Bluetooth wireless option is provided on the *Documentation Library Bluetooth* CD included with your tablet PC.
- Information about Microsoft's Wireless LAN configuration utility is available in the Help & Support Center, which is accessible from the Start Menu.

If you purchase a wireless device as an option, documentation about the device is included with the option.

8

External Device Connections

Standard Device

The jacks and connectors described in this guide support standard external devices.

- For information about which jack or connector to use, refer to the documentation included with the device.
- For information about installing or loading any software required by the device, refer to the device documentation, the operating system Help files, or the device manufacturer's Web site.

To connect a standard external device to the tablet PC:

1. If you are connecting a powered device, be sure the device is turned off.
2. Connect the device to a jack or connector on the tablet PC.
3. If you are connecting a powered device, plug the device power cord into a grounded electrical outlet.
4. Turn on the device.

If a properly connected display device does not display an image, try pressing the Q menu button > Internal and External item or External Only item to switch the image to the new device.

To disconnect a standard external device from the tablet PC, turn off the device (if it is powered), then disconnect the device from the tablet PC.

USB Device

USB is a hardware interface that can be used to connect external devices such as a USB keyboard, mouse, drive, printer, scanner, or hub to the tablet PC or an optional Docking Station.

A USB device functions in the system in the same way as a comparable non-USB device. The USB connectors support USB 2.0- or 1.1-compliant devices.

A USB hub is a connecting device that can be powered or unpowered. USB hubs can be connected to a USB connector on the tablet PC or on an optional Docking Station or to other USB devices. Hubs support varying numbers of USB devices and are used to increase the number of USB devices in the system.

- Powered hubs must be connected to external power.
- Unpowered hubs must be connected either to a USB connector on the tablet PC or to a port on a powered hub.

Some USB devices may require additional support software, which is usually included with the device. For software information about a specific device, refer to the documentation included with the device.

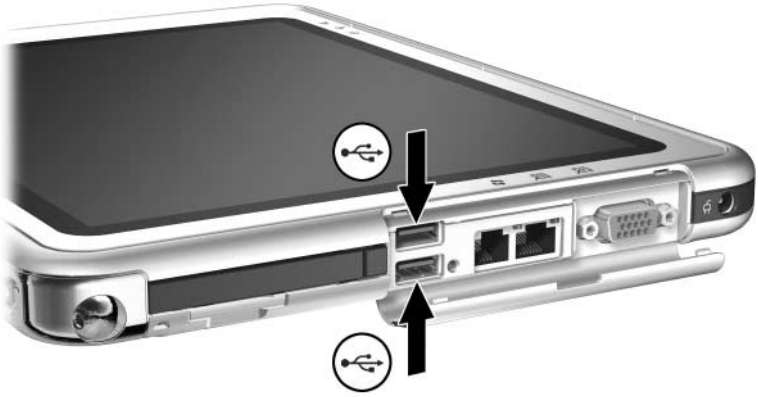

Identifying the 2 USB connectors on the tablet PC

Tablet PC Keyboard

A tablet PC keyboard, which includes a numeric keypad, can be used with the tablet PC.

For information about using the tablet PC keyboard pointing device, keypad, and **F11/F12** key, see the "Pen, Command Controls and Keyboards" chapter, "Tablet PC Keyboard" section.

The tablet PC can be attached or detached from the keyboard while it is on, off, in Standby, or in Hibernation.

Attaching the Tablet PC to the Keyboard

To attach the tablet PC to the keyboard:

1. Place the keyboard on a flat surface with the keyboard keys facing you.
2. Rotate the attachment features on the rotation disk toward the keyboard.

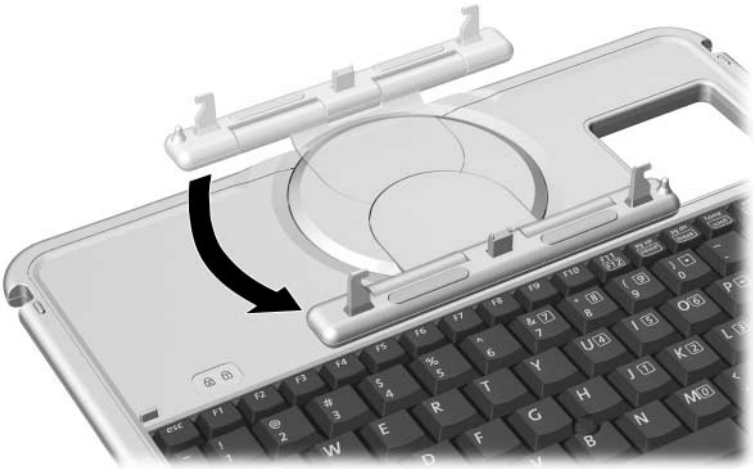

Rotating the attachment features toward the keyboard

3. Position the tablet PC horizontally above the keyboard, with the front of the tablet PC facing the keyboard.

Positioning the tablet PC above the keyboard

4. Align the 4 slots on the tablet PC with the keyboard connector, alignment key, and 2 keyboard hooks on the keyboard ❶, then press the tablet PC downward until it snaps into place ❷.

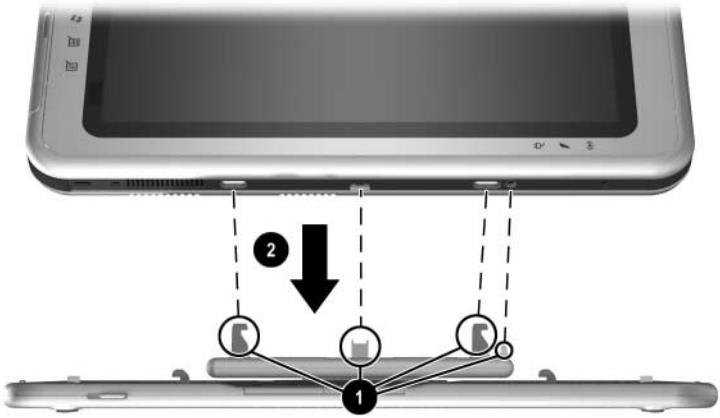

Attaching the tablet PC to the keyboard

Adjusting the Tablet PC and Keyboard

To tilt the tablet PC screen to a comfortable viewing angle, push gently on the top of the tablet PC.

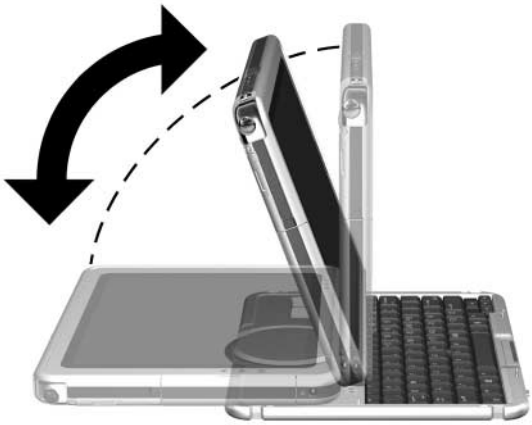

Tilting the tablet PC on the keyboard

Closing the Tablet PC and Keyboard

To close the tablet PC and keyboard as you would close the display on a standard notebook:

1. Rotate the tablet PC clockwise until it snaps into place facing away from the keyboard.

Rotating the tablet PC toward the back of the keyboard

2. Tilt the tablet PC downward onto the keyboard.

Closing the tablet PC and keyboard

Transporting the Tablet PC and Keyboard

If you are transporting the tablet PC and keyboard while they are not attached, be sure the rotation disk is in the default position. (The attachment features are at the rear of the tablet PC and the HP logo is right side up when you are facing the keyboard.)

If you are transporting the tablet PC and keyboard while they are attached, you may want to use the keyboard latch. The keyboard latch locks the tablet PC to the keyboard while the tablet PC and keyboard are closed.

- To lock the tablet PC to the keyboard while the tablet PC is closed, slide the keyboard latch to the right ❶.
- To release the tablet PC from the closed position, push the keyboard latch to the left, then slide and hold the latch toward the left as you open the tablet PC ❷.

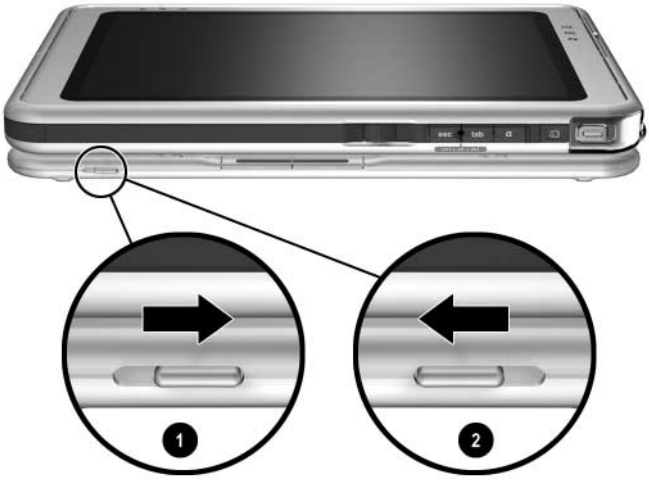

Using the keyboard latch

Detaching the Tablet PC from the Keyboard

To detach the tablet PC from the keyboard:

1. If the tablet PC is closed, open the tablet PC, then rotate the tablet PC so the screen is facing the keyboard in the notebook position.

   If the tablet PC does not open easily from the keyboard, it may be secured to the keyboard with the keyboard latch. For release instructions, see the "Transporting the Tablet PC and Keyboard" section, earlier in this chapter.

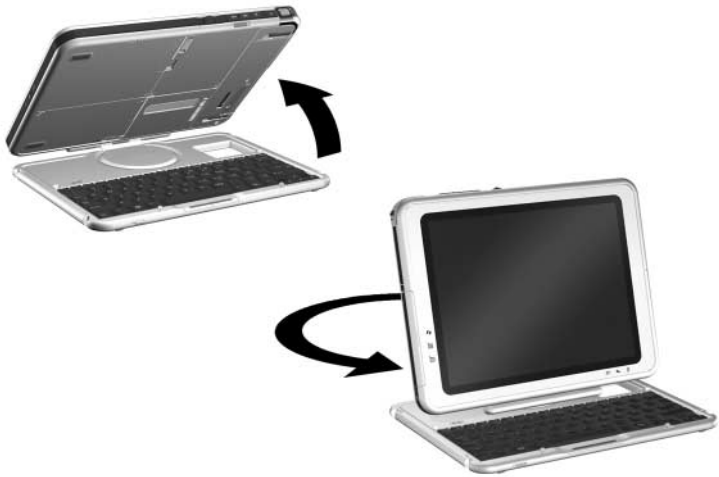

Opening the tablet PC to the notebook position

2. Rotate the tablet PC and keyboard so the back of the tablet PC and the keyboard are facing you.

Positioning the tablet PC and keyboard to detach the tablet PC

3. To detach the keyboard, slide and hold the attachment release switch ❶ on the tablet PC as you lift the tablet PC away from the keyboard ❷.

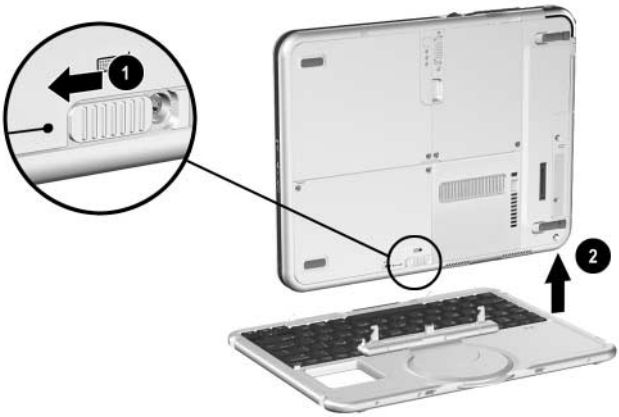

Detaching the tablet PC from the tablet PC keyboard

Cable Lock

Loop the cable around a secure object, then insert the cable lock key ❶ into the security cable lock ❷. Then insert the cable lock into the security cable slot ❸ on the tablet PC.

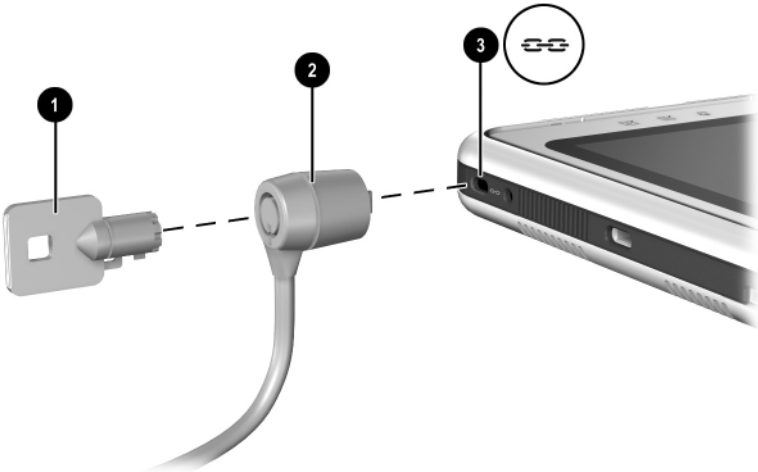

Connecting an optional cable lock

The purpose of security solutions is to act as a deterrent. These solutions do not prevent the product from being mishandled or stolen.

9

Additional Hardware Options

Obtaining Upgrades

To order or learn more about optional hardware upgrades and accessories, visit the HP Web site at http://www.hp.com. The hardware upgrade area is English only. Or, refer to the *Worldwide Telephone Numbers* booklet, included in English only with the tablet PC, to contact an HP-authorized dealer, reseller, or service provider.

For information about obtaining and installing software updates and upgrades, refer on this CD to the *Software Guide*.

Using a PC Card

A PC Card is a credit card–sized accessory designed to conform to the standard specifications of the Personal Computer Memory Card International Association (PCMCIA). The tablet PC supports both 32-bit CardBus and 16-bit PC Cards.

A PC Card can be used to add modem, sound card, memory, storage, wireless communication, or digital camera functions to the tablet PC. A PC Smart Card Reader or a biometric identification PC Card can add security.

The purpose of security solutions is to act as a deterrent. These solutions do not prevent the product from being mishandled or stolen.

Selecting a PC Card

A Type I or Type II PC Card can be used. A Type III PC Card will not fit into the PC Card slot of the tablet PC. (Types I, II, and III PC Cards vary by thickness, with Type III being the thickest.)

Zoomed video cards are not supported.

Configuring a PC Card

CAUTION: If you install all of the software or any of the enablers provided by a PC Card manufacturer, you may not be able to use other PC Cards. If you are instructed by the documentation included with a PC Card to install device drivers:

- Install only the device drivers for the Microsoft Windows XP Tablet PC Edition operating system.
- Do not install other software, such as card services, socket services, or enablers, that may also be supplied by the PC Card manufacturer.

Inserting a PC Card

CAUTION: To prevent damage to the PC Card connectors, use minimal force when inserting a PC Card into the PC Card slot.

1. Hold the PC Card label-side up with the connector facing the tablet PC.
2. Gently push the card into the PC Card slot until the card is seated.

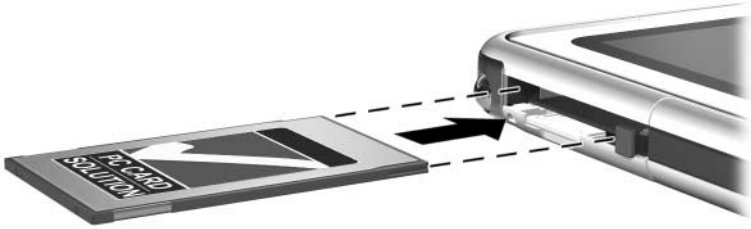

Inserting a PC Card

Stopping and Removing a PC Card

CAUTION: To prevent loss of work or an unresponsive system, stop a PC Card before removing it.

An inserted PC Card uses power even when it is not in use. To conserve power, stop a PC Card when you are not using it.

1. Close all applications and complete all activities that are supported by the PC Card.
2. To stop a PC Card, select the system tray icon for Safely Remove Hardware, then follow the instructions on the screen. (To display the Safely Remove Hardware icon, select the system tray icon for Show Hidden Icons.)

3. To release the PC Card, press the PC Card eject button ❶.
4. Gently pull out the PC Card ❷.

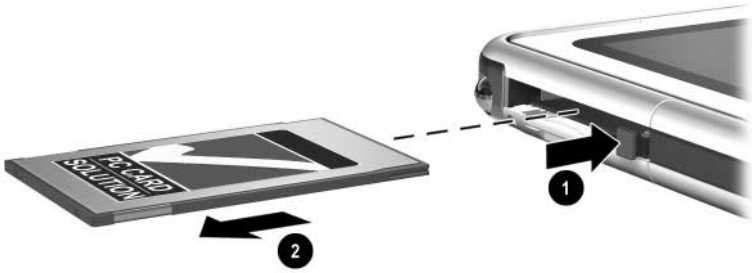

Removing a PC Card

Using an SD Card

An SD Card is smaller than a PC Card, but can add similar functions to the tablet PC system. Most commonly, an SD Card is used to add backup, storage, wireless network, fax/modem, or cellular telephone functions.

When using an SD Card, HP recommends that you connect the system to external power whenever possible. Some SD Cards use large amounts of power and can quickly drain a battery pack.

CAUTION: To prevent loss of work or damage to an SD Card:

- Do not save your work to an SD Card unless the tablet PC is connected to external power or you are certain that the battery pack has enough charge remaining to complete the operation.
- Do not shut down the tablet PC or remove the SD Card until all activities supported by the card are complete.

Configuring an SD Card

If an SD Card manufacturer instructs you to install card-specific drivers, be sure to install only the drivers supported by the Windows XP Tablet PC Edition operating system. If you are unsure of driver compatibility, contact the SD Card manufacturer.

Inserting an SD Card

CAUTION: To prevent damage to the SD Card connectors, use minimal force when inserting an SD Card into the SD Card slot.

1. Hold the SD Card label-side up with the connector facing the tablet PC.
2. Gently push the card into the SD Card slot until the card is seated.

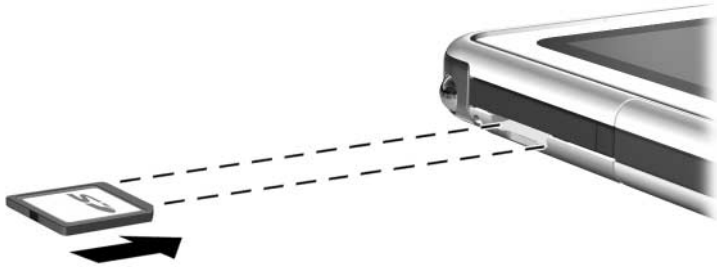

Inserting an SD Card

Stopping and Removing an SD Card

CAUTION: To prevent loss of work or an unresponsive system, stop an SD Card before removing it.

An inserted SD Card uses power even when it is not in use. To conserve power, stop an SD Card when you are not using it.

1. Close all applications and complete all activities that are supported by the SD Card.
2. To stop an SD Card, select the system tray icon for Safely Remove Hardware, then follow the instructions on the screen. (To display the Safely Remove Hardware icon, select the system tray icon for Show Hidden Icons.)
3. To release the SD Card, press inward on the SD Card ❶.
4. Gently pull out the SD Card ❷.

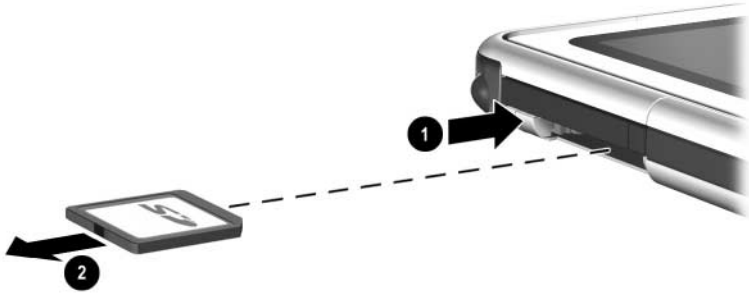

Removing an SD Card

Increasing Memory

You can increase the amount of RAM (random access memory) in the tablet PC with an optional PC Card or with an optional memory module.

The tablet PC has one user-accessible memory slot. The slot supports a PC133-compliant 128-megabyte, 256-megabyte, or 512-megabyte memory module.

Displaying Memory Information

When the amount of RAM in the system increases, the operating system increases the hard drive space reserved for the hibernation file.

If you experience problems with Hibernation after increasing RAM, verify that your hard drive has enough free space for the larger hibernation file.

- To display the amount of RAM in the system:

  Select Start > Control Panel > Performance and Maintenance icon > System icon > General tab.

- To display both the amount of free space on your hard drive and the amount of space required by the hibernation file:

  Select Start > Control Panel > Performance and Maintenance icon > Power Options icon > Hibernate tab.

Removing or Inserting a Memory Module

WARNING: To prevent exposure to electric shock, work only in the memory and mini PCI compartment during this procedure. The hard drive bay and the memory and mini PCI compartment are the only user-accessible internal compartments on the tablet PC. All other areas that require a tool to access should be opened only by an HP-authorized service provider.

WARNING: To prevent exposure to electric shock and damage to the tablet PC, shut down the tablet PC, unplug the power cord, and remove the battery pack before installing a memory module.

CAUTION: To prevent electrostatic discharge from damaging electronic components: Discharge static electricity from yourself by touching a grounded metal object before beginning this procedure. For more information about preventing electrostatic damage, refer on this CD to the *Regulatory and Safety Notices* guide.

1. Be sure that you have followed the instructions in the preceding warnings and caution.

   If you are not sure whether the tablet PC is off or in Hibernation, slide and release the power switch. If your work returns to the screen, save your work, exit all applications, then shut down the tablet PC.
2. Disconnect all external devices connected to the tablet PC.
3. Disconnect the power cord.
4. Remove the battery pack.
5. If the tablet PC keyboard is attached to the tablet PC, detach the keyboard.

6. Turn the tablet PC front side down.
7. Remove the two memory and mini PCI compartment retaining screws ❶.
8. Slide, lift, then remove the memory and mini PCI compartment cover ❷.

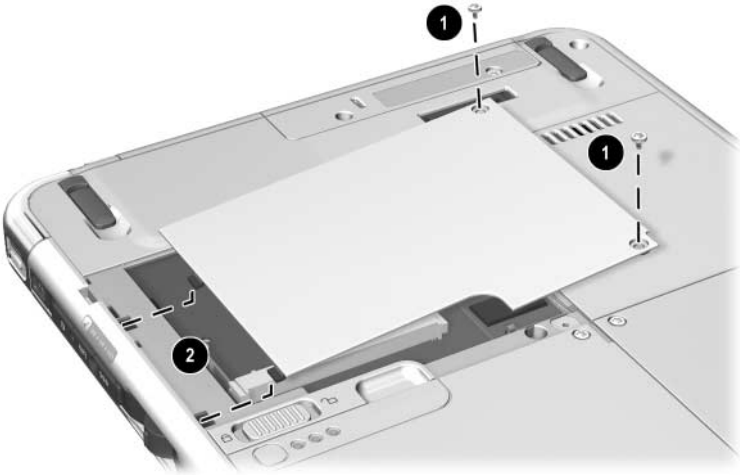

Opening the memory compartment

9. Remove or insert the memory module.

   To remove a memory module:

   a. Release the retention clips on each side of the memory module ❶. (The memory module tilts upward.)

   b. Grasp the edges of the memory module, then gently pull it out of the memory slot ❷.

   c. To protect a removed memory module, place it in an electrostatic-safe container.

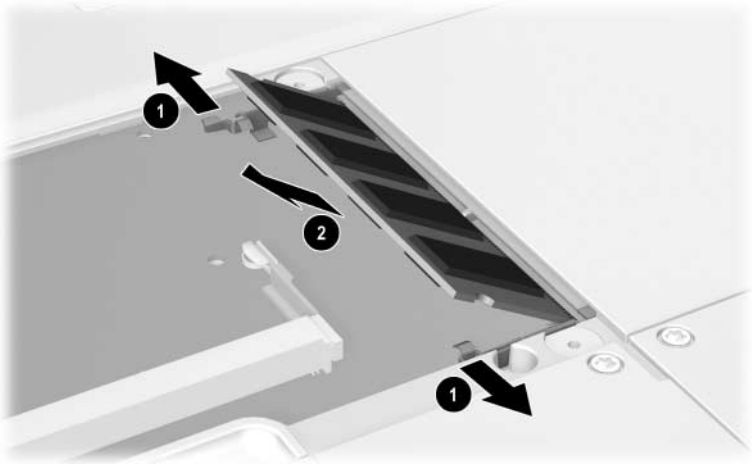

Removing a memory module

To insert a memory module:

a. Align the keyed (notched) edge of the memory module with the keyed area in the memory slot ❶.

b. Press the memory module into the slot from a 45-degree angle until it is seated ❷.

c. Push the memory module downward until the retention clips snap into place ❸.

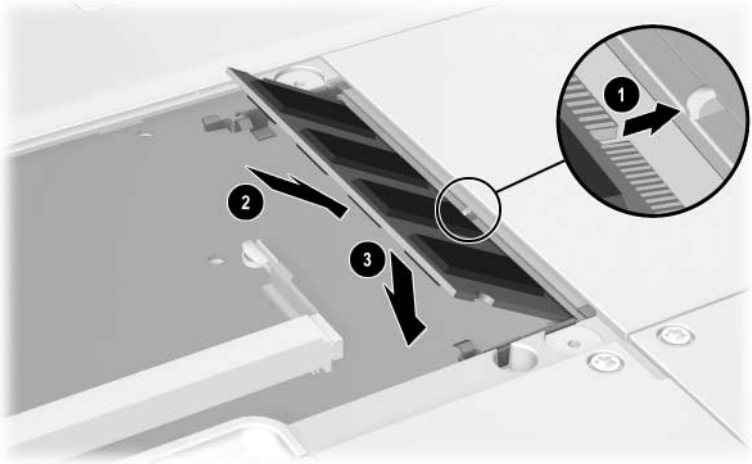

Inserting a memory module

10. Align the tabs on the memory compartment cover with the cover slots on the tablet PC ❶, then press downward on the cover until it is seated.
11. Reinsert the two retaining screws that secure the memory and mini PCI compartment cover to the tablet PC ❷.

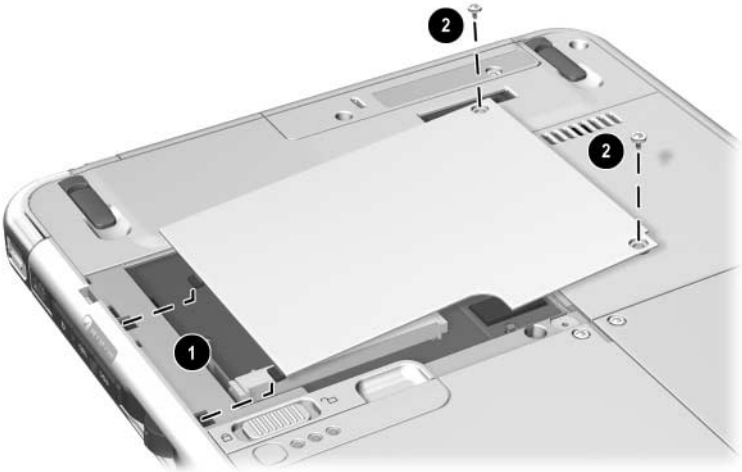

Replacing the memory compartment cover

10

Maintenance, Shipping and Travel

Maintaining Software

HP recommends that you:

- Install all software updates as they become available. For instructions, refer on this CD to the *Software Guide,* "Software Updates and Restorations" chapter.
- Install and use virus protection software. Antivirus software can be purchased from most computer or electronics retailers.
- Back up your work and system software frequently.
  - ❏ For information about using the operating system backup utility, select Start > Help and Support > Performance and Maintenance topic. In the upper left pane of the Performance and Maintenance window, select the Backing Up Your Data check box.
  - ❏ For information about selecting optional backup software or hardware, consult with your authorized HP dealer, reseller, or service provider.

Protecting Hardware

To protect and prolong the performance of your hardware, observe the following cautions.

CAUTION: To prevent damage to your hardware or loss of work:

- Carry and store the tablet PC in the portfolio or an optional Executive Portfolio.
- Do not place anything on top of the tablet PC, even when it is in a portfolio.
- Use the tablet PC only on solid surfaces and in open areas. Do not allow a hard surface, such as an adjoining optional printer, or a soft surface, such as carpet, clothing, or bedding, to block the vent.
- Protect the tablet PC from liquids and excessive moisture.
- Do not expose the tablet PC to direct sunlight, extreme temperatures, or ultraviolet light for extended periods of time.
- Keep all hard drives and diskettes away from magnetic fields. Magnetic fields can corrupt data stored on hard drives and diskettes.
- If the tablet PC will be unused for one week or more, shut it down.
- If the tablet PC will be disconnected from external power for more than one month, shut down the tablet PC and remove the battery pack. For information about storing the battery pack, see Chapter 3,"Battery Packs."

Using Portfolios

To protect the tablet PC screen, HP recommends that you use or transport the tablet PC with a portfolio attached. A slim portfolio that protects the tablet PC or the tablet PC attached to an optional keyboard is included with the tablet PC.

An optional leather Executive Portfolio that provides additional protection, has slots for business cards, and accommodates additional items is available in most regions.

To obtain the Executive Slimline or Workstation Portfolio, refer to the *Worldwide Telephone Numbers* booklet included in English only with the tablet PC to contact your authorized HP dealer, reseller, or service provider.

Attaching a Portfolio

When you are using only the tablet PC, press the 2 tabs on the portfolio into the 2 universal attachment slots on the tablet PC.

Identifying the universal attachment slots on the tablet PC

When you are using the tablet PC attached to the tablet PC keyboard, press the 2 tabs on the portfolio into the 2 universal attachment slots on the keyboard.

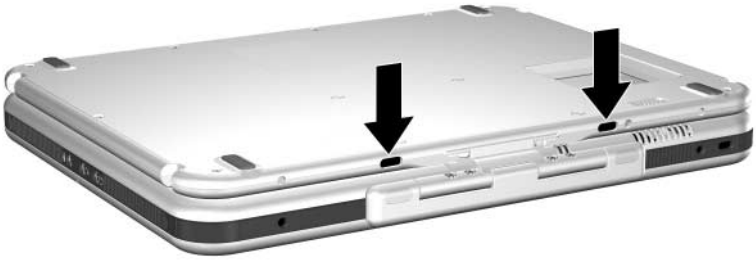

Identifying the universal attachment slots on a tablet PC keyboard

Detaching a Portfolio

To release a portfolio from the tablet PC, slide an hold the attachment release switch on the tablet PC.

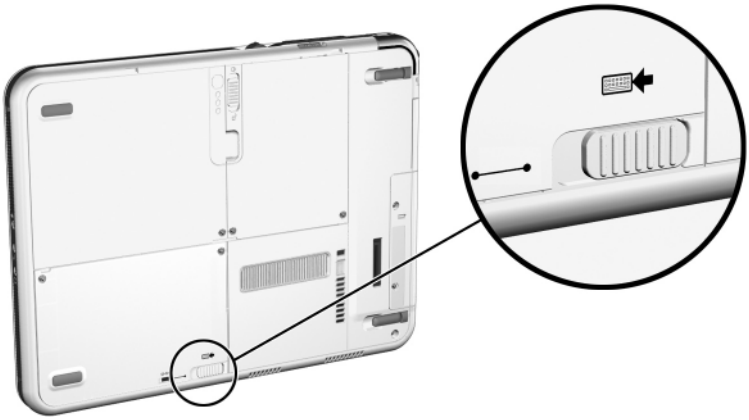

Sliding the attachment release switch on the tablet PC

To release a portfolio from the tablet PC keyboard, slide and hold the attachment release switch on the tablet PC keyboard.

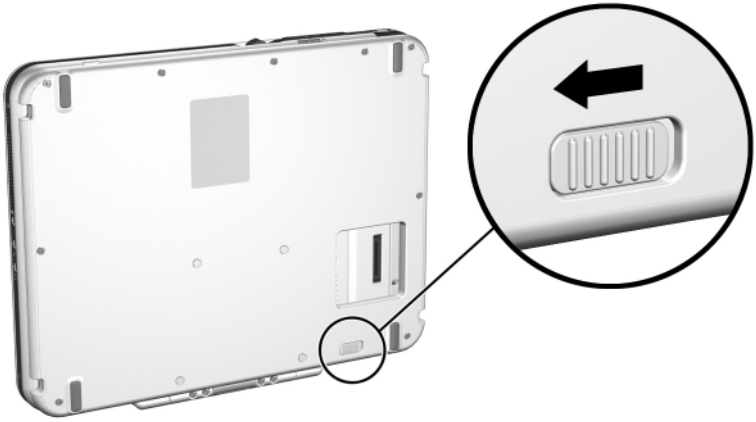

Sliding the attachment release switch on the tablet PC keyboard

Cleaning Hardware

WARNING: To prevent electric shock or damage to components, do not attempt to clean the tablet PC until you:

- Shut down the tablet PC.
- Disconnect the tablet PC from external power.
- Disconnect all powered external devices from the tablet PC.

CAUTION: Do not spray liquids on the tablet PC. Household solvents can permanently damage tablet PC surfaces, and any liquid can damage the internal components of the tablet PC or an optional keyboard.

Cleaning the Screen

To remove smudges and lint, clean the screen with a soft, lint-free cloth dampened with water or a glass cleaning liquid. Antistatic screen cleaner or premoistened antistatic wipes may also be used.

Cleaning a Tablet PC Keyboard

Dust, lint, and other debris can affect the performance of an optional tablet PC keyboard. To prevent sticking or nonfunctioning keys, clean the keyboard frequently using a can of compressed air with a straw extension. Blow the compressed air around the base of each key.

To clean the key surfaces, use a soft, damp, lint-free cloth.

Using a household vacuum cleaner to clean the keyboard may deposit, rather than remove, debris.

Cleaning a tablet PC keyboard with a can of compressed air

Replacing Hardware

Replacing the System Hard Drive

The system hard drive is the hard drive in the hard drive bay. Remove the system hard drive only for repair or replacement.

CAUTION: To prevent an unresponsive system and loss of work:

- Shut down the tablet PC before removing the system hard drive. Do not remove the system hard drive while the tablet PC is powered on, in Standby, or in Hibernation.
- To verify that the tablet PC is off and not in Hibernation, slide and release the power switch. If your work returns to the screen, save your work, exit all applications, then shut down the tablet PC.

1. Save your work, then shut down the tablet PC.
2. Turn the tablet PC front side down.
3. Remove the 2 hard drive bay cover retaining screws ❶.
4. Slide, lift, then remove the hard drive bay cover ❷.

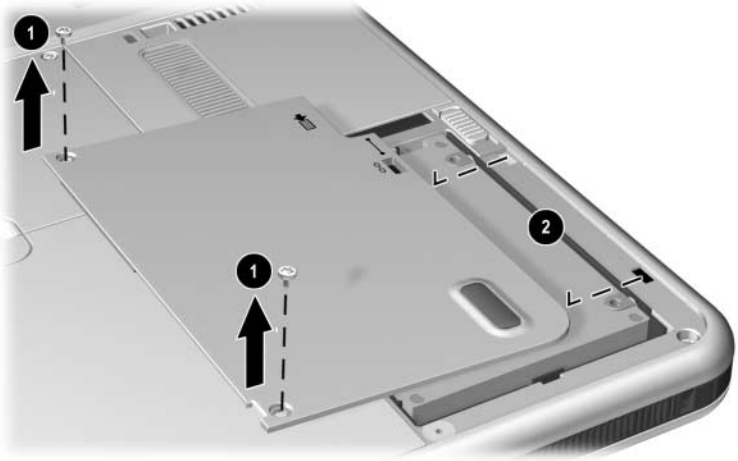

Removing the hard drive bay cover

CAUTION: The connector pins on the hard drive are designed to support only the minimal insertions or removals that may be required for repair or replacement. To prevent damage to the hard drive connectors, be careful not to bend them while removing the hard drive.

5. To remove the hard drive, gently disengage the drive connectors ❶ by sliding the hard drive toward the lower edge of the tablet PC.
6. Remove the drive from the bay ❷.

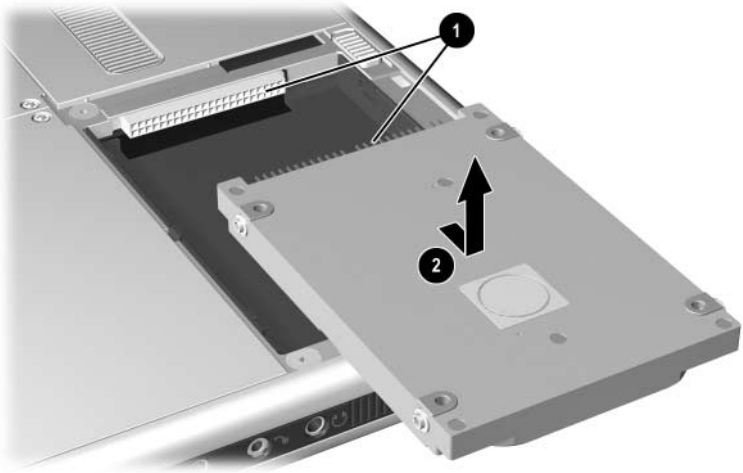

Removing a system hard drive from the hard drive bay

7. To insert the replacement hard drive, lower the drive into the hard drive bay ❶, then slide the connectors on the hard drive toward the connectors in the bay ❷ until the connectors engage and the drive is seated.

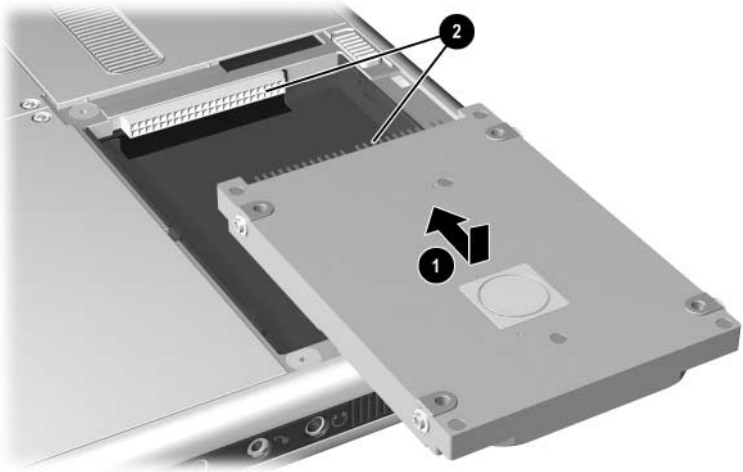

Inserting a system hard drive into the hard drive bay

8. Align the tabs on the hard drive bay cover with the cover slots on the tablet PC ❶, then press downward on the cover until it is seated.
9. Reinsert the 2 retaining screws that secure the cover to the tablet PC ❷.

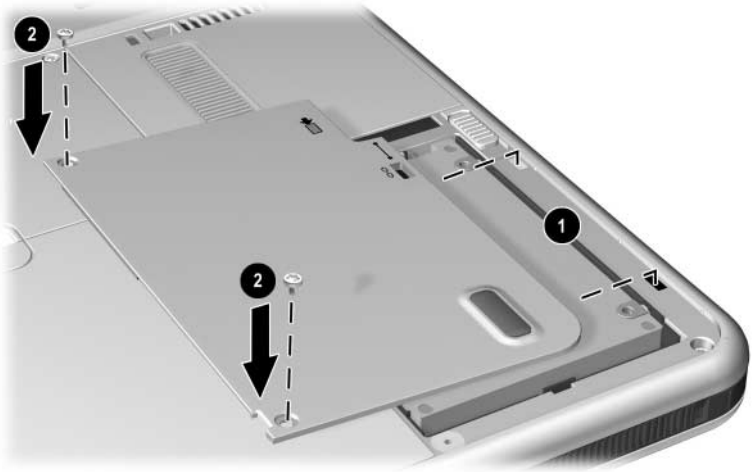

Replacing the hard drive bay cover

Replacing a Pointing Stick Cap

Two pointing stick replacement caps are included with an optional tablet PC keyboard. To replace a worn pointing stick cap:

1. If the keyboard is attached to the tablet PC, shut down the tablet PC.
2. Gently pull off the used pointing stick cap.
3. Push a replacement cap into place.

Replacing the pointing stick cap

Preparing the Tablet PC for Shipping or Travel

1. Back up your work.
2. Remove a PC Card or SD Card.
3. Undock the tablet PC from an optional Docking Station.
4. Turn off, then disconnect all optional external devices such as headphones or an External MultiBay. (It is not necessary to detach the tablet PC from the tablet PC keyboard.)
5. Shut down the tablet PC.
6. If the tablet PC will be disconnected from an external power source for more than one month, shut down the tablet PC, remove the battery pack, and store the battery pack in a cool, dry place.
7. If you are shipping the tablet PC, insert it into a portfolio, place it in the original packing box or similar protective packaging, and label the package “FRAGILE.”

Traveling with the Tablet PC

Checklist for Travelers

- Take along a backup of your work. Do not pack the backup with the tablet PC.
- Carry the tablet PC with you. Do not check it with your luggage.
- If you will have access to an optical drive, you may want to take along the *Documentation Library* CD. If not, HP suggests that you print and take with you the "Contacting HP" section later in this chapter.
- Do not expose the tablet PC, a hard drive, or a diskette to a magnetic security detector.
  - The security device that examines carry-on items placed on a conveyer belt uses x-rays and is safe for the tablet PC and all drive media.
  - The walk-through security device and handheld security wands are magnetic and may damage the tablet PC, a hard drive, or a diskette.
- If you plan to use the tablet PC during a flight, check with the airline in advance. In-flight tablet PC use is at the discretion of the airline.
- If you expect to encounter climatic extremes, see the "Specifications" chapter, "Tablet PC Operating Environment" section.

- If you are traveling internationally:
  - If you plan to use an internal modem, review Chapter 6, "Internal Modem" for information about using adapters and country configurations. You may want to print and take with you the "Solving Travel Connection Problems" section of that chapter if you are not bringing the *Documentation Library* CD.
  - Check the computer-related customs regulations for each country on your itinerary.
  - Consult with an electronics retailer or an HP authorized dealer, reseller, or service provider about power cord and adapter requirements for each location in which you plan to use the tablet PC. (Voltage, frequency, and plug configurations vary.) To contact an HP-authorized dealer, reseller, or service provider near you, refer to the *Worldwide Telephone Numbers* booklet included in English only with the tablet PC.

WARNING: To reduce the risk of electric shock, fire, or damage to the equipment, do not attempt to run the tablet PC with a voltage converter kit sold for appliances.

Contacting HP

Getting Help from the Internet

If you have Internet access, you can resolve most problems that may arise while traveling with the tablet PC by using HP Help and Support.

HP Help and Support provides links to specific areas of the HP Web site (http://www.hp.com) where you can:

- Obtain all documentation included with your tablet PC as well as other information about your tablet PC such as specifications, white papers, and customer advisories.
- Initiate an online service event with an HP support specialist.

- Download the latest drivers, utilities, and other software updates for your tablet PC.
- Subscribe to the *HP Support Software* CD.

To access these links and descriptions of the options they provide, select Start > HP Help and Support. The HP Help and Support menu is displayed in the left panel.

Not all links are available worldwide, and most sites are available in limited languages.

Getting Help Without Using the Internet

If you need help and cannot access the Internet:

- To obtain troubleshooting information:
  - ❏ Refer on this CD to the *Troubleshooting* guide.
  - ❏ Refer to the "Solving Problems" chapter in the printed *Startup Guide* included with the tablet PC.
- To obtain a list of worldwide Technical Support telephone numbers:
  - ❏ Select Start > Control Panel > Performance and Maintenance icon > System icon. Then, near the lower edge of the System Properties window, select the Support Information button.

Refer to the printed *Worldwide Telephone Numbers* booklet included in English only with the tablet PC.

11

Specifications

The information in this chapter may be helpful if you plan to use or transport the tablet PC internationally or in extreme environments.

Tablet PC and Tablet PC Keyboard Dimensions

Dimension	Metric	U.S.
Height	2.1 cm	0.8 in
Width	21.0 cm	8.3 in
Depth	27.1 cm	10.8 in

Tablet PC Operating Environment

Factor	Metric	U.S.
Temperature		
Operating	10° to 35° C	50° to 95° F
Nonoperating	-10° to 60° C	14° to 140° F
Relative humidity (noncondensing)		
Operating	10 to 90%	10 to 90%
Nonoperating	5 to 90%	5 to 90%
Maximum altitude (unpressurized)		
Operating	3,048 m	10,000 ft
Nonoperating	9,144 m	30,000 ft

Tablet PC Rated Input Power

The tablet PC operates on DC power, which can be supplied by an AC or DC power source.

Input Power	Rating
Operating voltage	100–120/220–240 Vrms
Operating current	1.7/0.85 A RMS
Operating frequency range	50 to 60 Hz AC
When powered by a DC source	18.5 V MAX

✎ This product is designed for IT power systems in Norway with phase-to-phase voltage not exceeding 240 Vrms.

Modem Specifications

This tablet PC has been tested and found to comply with the limits for a Class B digital device.

Factor	Specification	
Temperatures		
Operating	10° to 40° C (50° to 104° F)	
Nonoperating	-20° to 60° C (-4° to 140° F)	
Relative Humidity (noncondensing)		
Operating	10 to 90%	
Nonoperating	5 to 90%	
Interfaces	Communications connector	Standard RJ-11 connector
	Host Connector	mini PCI Type III
Power Requirements	+3.3 volts ±5%, +3.3 vaux ±5%	

Finding More Environmental Information

The specifications in this chapter contain information about exposing the tablet PC to environmental extremes.

For similar information about storing battery packs, see the “Battery Packs” chapter, “Storing a Battery Pack” section.

For information about exposing the tablet PC to sunlight, ultraviolet light, x-rays, or magnetic fields, see the “Maintenance, Shipping and Travel” chapter, “Protecting Hardware” section.

Index

A

AC adapter
- AC power connector 1–11
- connecting 3–15
- disconnecting 3–1
- identifying 1–22
- light 1–2

AC power connector 1–11
AC power, switching to and from 3–1
adapter
- for AC power cord. *See* AC adapter
- for connecting AC adapter to electrical outlet (Japan only) 1–22
- for modem. *See* modem adapter

adjustment, tilt 1–26
airport security devices 10–15
alignment
- key 1–26
- key slot 1–9
- notches, docking 1–25
- slots, battery bay 3–4
- slots, docking 1–8
- tabs, battery pack 3–4

altitude specifications 11–2
analog telephone lines 6–6
antennas 1–7, 1–10
antivirus software 10–1
applications key 1–24
applications. *See* software
AT commands 6–8
attachment release switch
- on tablet PC 1–14, 8–9
- on tablet PC keyboard 1–27

audio devices, external
- connecting 8–1
- jacks for 5–5

audio-out jack 5–5
Auto/Air Cable
- AC power connector 1–11
- connecting 3–15
- tasks supported by 3–9

Automobile Power Adapter/Charger
- AC power connector 1–11
- connecting 3–15
- tasks supported by 3–8

AutoPlay 4–8

B

backup software 10–1
battery bay
- alignment slots 3–4

inserting battery pack into 3–4
Microsoft Certificate of Authenticity label, inside 1–17
release latch 1–15
removing a battery pack security screw from 3–6
removing battery pack from 3–2
battery light 1–2
battery pack
button and lights on 3–12
calibrating 3–16
charging 3–8
disposing of 3–21
inserting 3–4
monitoring charge in 3–10
Quick Check feature 3–12
recycling 3–21
release latch 1–15
security screws 3–6
storing 3–1, 3–20
tabs 3–4
battery power
conserving 3–19
low-battery conditions 3–13, 3–14
running tablet PC on 3–1
switching to and from 3–1
battery, bridge 3–14
biometric identification PC Cards 9–1
board
mini PCI 1–16, 7–5
modem 6–1
bridge battery 3–14
button(s)
battery quick check 3–12
esc 1–6, 2–12
Journal launch 1–3, 2–9
media eject, on diskette drive 4–7
media release, on optical drive 4–5
PC Card eject 9–4
pen 2–2
pointing stick 2–19
Q menu 1–6, 2–10
reset 2–12
rotate 1–3, 2–9
tab 1–6, 2–11
Tablet PC Input Panel launch 1–3, 2–8
Windows Security 1–5, 2–11
See also jog dial; latch; switch

C

cable
DC 1–11
modem 1–21, 6–3
modem vs. network 1–21
network 1–21, 7–2
security 8–10
cable lock, security 8–10
calibration
battery pack 3–16
pen 2–4
cap, replacing pointing stick 10–13
caps lock light 1–23
card and socket services, PC Card 9–2

CD-ROM, CD-RW drives. *See* drives
CDs included with tablet PC 1–19
CDs, CD-RWs. *See* drive media
circuitry, noise suppression
on modem cable 6–3
on network cable 7–2
command controls
identified 2–6
procedures 2–8
Quick Reference 2–7
commands, AT 6–8
compartment memory 1–16, 9–9
connector(s)
AC power 1–11
connection procedures 8–1
docking 1–14
drive 4–3
external monitor 1–11
External MultiBay 1–11
keyboard 1–9
modem 6–2
network 1–21
telephone 1–21
USB 8–2
See also fasteners for tablet pc keyboard; jack
conservation, power 3–19
controls, command 2–6
cord, power 1–21
See also cable
country-specific modem adapter
configuring software for use with 6–5
connecting 6–4
included with tablet PC 1–22
when required 6–2
critical low-battery condition
identifying 3–13
restoring from 3–15
ctrl+alt+delete command 2–11

D

DC cable 1–11
device drivers
for external devices 8–1
modem 6–1
network 7–1
PC Card 9–2
SD (Secure Digital) 9–5
updating 10–17
USB 8–2
dial, jog
described 2–13
identified 2–6
dialing modes (pulse vs. tone) 6–6
digital telephone lines 6–6
dimensions, tablet PC 11–1
disc drive, diskette drive. *See* drives
disc, diskette. *See* drive media
disk, rotation 1–25
display device images, managing 8–1
docking
alignment notches 1–25
alignment slots 1–8
connector 1–14
connector pass-through 1–27
restraint latch recess 1–14

Docking Station
audio-out jack on 5–3
docking alignment notches 1–25
docking alignment slots 1–8
docking connector 1–14
drives supported by 4–1
drive media
affected by airport security 4–3
affected by Standby and Hibernation 4–8
caring for 4–9
displaying contents of 4–8
inserting a CD or DVD 4–4
inserting a diskette 4–7
playing 4–10
removing a CD or DVD (power available) 4–5
removing a CD or DVD (power unavailable) 4–6
removing a diskette 4–7
types and terms 4–2
drivers. *See* device drivers
drives
adding to system 4–1
affected by airport security 4–3
caring for 4–3
shipping 4–3
supported 4–1
types and terms 4–2
USB 8–2
See also hard drive, system
DVD, DVD/CD-RW drive. *See* drives
DVDs, CD-RWs. *See* drive media

E

eject button
diskette drive 4–7
optical drive 4–5
PC Card 9–4
electrostatic discharge (ESD) 9–8
enablers, PC Card 9–2
enter command 2–13
environmental specifications 11–1
esc button
identified 1–6
procedures 2–12
ESD (electrostatic discharge) 9–8
external devices
connecting, disconnecting 8–1
USB 8–2
See also connector(s); fasteners for tablet PC keyboard; jack; *specific types of devices*
external monitor connector 1–11
External MultiBay
connectors for 1–11
drives supported 4–1
External MultiBay connector 1–11

F

F11/F12 key
procedures 2–23
responding to Network Service Boot prompt with 7–5
fasteners for tablet PC keyboard 8–4
FDD (floppy disk drive). *See* drives
feet, tilt and stationary 1–18

Fn, specific functions of
on on-screen keyboard 2–17
on tablet PC keyboard 2–21, 2–23
freeze, system 2–11
function keys (F1, F2, etc.)
accessing F12 on tablet PC keyboard 2–23
accessing, on on-screen keyboard 2–17
standard functions of 1–24

H

hard drive bay
cover 10–8
cover retaining screws 10–8
replacing system hard drive in 10–8
hard drive, system
defined 4–2
displaying amount of free space on 9–7
replacing 10–8
retaining screw 10–9
space on, required for Hibernation file 9–7
See also drives
HDD (hard disk drive). *See* hard drive, system
headphones
audio-out jack 5–5
connecting 5–6, 8–1
headset
connecting 5–6, 8–1
headset jack 5–5
Hibernation
avoiding while playing media 4–8
identifying 10–8
initiated during critical low-battery condition 3–13
initiating 3–15
resuming from 3–15
holder, pen 2–5
hooks, keyboard 1–26, 8–4
HP Support Software CD 10–17
hub, USB 8–2
humidity specifications 11–2

I

identifying pen components 1–1
identifying tablet PC components
additional 1–19
back 1–14
front 1–2
left side 1–9, 1–10
lower side 1–8
right side 1–4
top 1–10, 1–11
identifying tablet PC keyboard components
additional 1–28
back 1–27
front 1–23
internal wireless activity light 1–2
internal wireless LAN
antennas 1–7, 1–10
documentation 7–5
optimizing transmissions 1–7

J

jack
audio-out 5–5
connection procedures 8–1
headset 5–5
microphone 5–5
PBX 6–6
RJ-11 telephone 6–2
RJ-45 network 7–2
See also connector(s)
Japan-specific outlet adapter 1–22
jog dial
identified 1–7
procedures 2–13
Journal application 2–9
Journal launch button
identified 1–3
procedures 2–9

K

key(s)
F11/F12 2–23
function (F1, F2, etc.) 1–24
Microsoft logo 1–24
numeric keypad 2–20
Windows application 1–24
keyboard, external USB
connecting 8–2
supported 2–1
keyboard, on-screen 2–17
keyboard, tablet PC
alignment key 1–26
attaching 8–3
cleaning 10–7
closing 8–6
components identified 1–23
connector 1–26
detaching 8–7, 8–8
F11/F12 key 2–23
hooks 1–26
latch 8–7
locking to tablet PC 8–7
numeric keypad 2–20
obtaining 2–18
opening 8–5, 8–7
pointing device 2–19
releasing 8–7, 8–8
replacing pointing stick cap 10–13
rotating 8–5
securing 8–6
setting pointing device preferences 2–20
shipping 10–14
tilting 8–5
unlocking 8–7

L

label
Microsoft Certificate of Authenticity 1–17
modem approvals 1–17
product identification 1–17
system 1–17
wireless certification 1–17
LAN. *See* internal wireless LAN; network
LAN connection lights 7–3
landscape orientation
defined 2–14
rotate button 1–3

Landscape View, Primary and Secondary 2–14
latch
battery pack release 1–15, 3–3
docking restraint, recess 1–14
keyboard 8–7
See also button(s); switch
light(s)
AC adapter 1–2
battery 1–2
battery quick check 3–12
caps lock 1–23
LAN connection 7–3
power/standby 1–4
wireless LAN activity 1–2
local area network. *See* internal wireless LAN; network
lock, security cable 8–10
lockup, system 1–4
low-battery conditions
identifying 3–13
resolving 3–15

M

magnetic fields, affecting hardware 10–15
media eject button 4–7
media, drive
avoiding Standby and Hibernation while using 4–8
caring for 4–9
displaying contents of 4–8
software 4–10
types and terms 4–2
memory
displaying amount of 9–7
module, inserting or removing 9–8
modules supported 9–7
slots available 9–7
microphone, external
connecting 5–7, 8–1
microphone jack 5–5
microphone, internal 5–4
Microsoft logo key 1–24
modem adapter
configuring software for use with 6–5
connecting 6–4
included 1–22
when required 6–2
modem cable
connecting 6–2
included 1–21
noise suppression circuitry on 6–3
RJ-11 telephone jack 1–11
vs. network cable 1–21
modem commands 6–8
modem, internal
board 6–1
setting country preferences for 6–5
specifications 6–1, 11–3
travel connection troubleshooting 6–6
using while connected to a network 7–1
modes, dialing (pulse vs. tone) 6–6
module, memory 9–7
monitor, external
connecting 8–1

displaying image on 8–1
external monitor connector 1–11
mouse, external
setting preferences for 2–1
supported 2–1
USB connectors 8–2

N

network
accessing at startup 7–4
connection specifications 7–1
hardware and software included 7–1
LAN lights 7–3
Service Boot prompt 7–5
turning connection on and off 7–3
using internal modem while connected to 7–1
network cable
connecting 7–2
included 1–21
noise suppression circuitry on 7–2
RJ-45 network jack 1–11
vs. modem cable 1–21
No Dial Tone error message 6–7
noise suppression circuitry
on modem cable 6–3
on network cable 7–2
number
keys, on keypad 2–20
keys, on on-screen keyboard 2–17
Product Key 1–17
serial 1–17
numeric keypad 2–20

O

operating environment specfications 11–2
operating system Product Key number 1–17
optical disc. *See* drive media
optical drive. *See* drives
Outlook 2–9

P

PBX jack 6–2, 6–6
PC Card
eject button 9–4
enablers and card and socket services 9–2
functions 9–1
inserting 9–3
microdrive 4–1
removing 9–4
stopping 9–3
pen
attaching 2–5
button 2–2
calibration 2–4
components 1–1
entering information with 2–2
Help and tutorials 2–1
Journal application 2–1, 2–7
pen-activated buttons 2–6
setting preferences for 2–5, 2–20

peripherals
connecting, disconnecting 8–1
USB 8–2
See also connector(s); fasteners for tablet PC keyboard; jack; *specific types of devices*
pointing device(s)
command controls 2–6
on tablet PC keyboard 2–18
pen 2–1
setting preferences for 2–5, 2–20
using in Setup utility 7–4
pointing stick cap
replacing 10–13
spares included 1–28
portfolio(s)
attaching 10–3
detaching 10–5
Executive 10–3
included with tablet PC 10–3
when to use 10–3
portrait orientation
defined 2–14
rotate button 1–3
Portrait View, Primary and Secondary 2–14
power
connector, AC 1–11
conservation 3–19
cord 1–21
rated input 11–2
switch 1–4
switching between external and battery 3–1
See also battery power
Power Meter 3–10
power/standby light 1–4
Product Key number 1–17
projector
connecting 8–1
displaying image on 8–1
external monitor connector 1–11
pulse dialing mode 6–6
PXE (Preboot eXecution Environment) server 7–4

Q

Q Menu
Brightness tab 3–19
described 2–10
Internal and External item 8–1
Internal Only item 8–1
menu 1–6
volume controls 5–2
Q menu button
identified 1–6
procedures 2–10
Quick Check feature, battery 3–12

R

RAM (random access memory) 9–7
recycling a battery pack 3–21
regulatory information
Class B designation (FCC) 11–3
release latch, battery pack 3–3
release switch, attachment
on tablet PC 1–14, 8–9
on tablet PC keyboard 1–27
reset (emergency shut down) 2–11

RJ-11 telephone jack
connecting 6–2
modem cable 1–21
RJ-45 network jack
connecting 7–2
network cable 1–21
rotate button
identified 1–3
procedures 2–9
setting preferences for 2–14
rotation disk 1–25
RPL (Remote Program Load) server 7–4

S

screen protector
included with Docking Station 1–9
slots, on tablet PC 1–9
slots, on tablet PC keyboard 1–27
universal attachment slots 1–9, 1–27
screen, cleaning 10–6
SD (Secure Digital) Card
drivers 9–5
functions 9–4
power considerations 9–4, 9–6
stopping 9–6
Secure Digital Card, *See also* SD (Secure Digital) Card
security
cable lock 8–10
screws, battery pack 3–6
security devices, affecting hardware 10–15
serial number 1–17
servers, network 7–4
Setup utility
accessing 7–4
network settings 7–4
resetting the tablet PC 2–12
shipping the tablet PC 10–14
shutting down the tablet PC 2–11
Sleep. *See* Standby
slipcase 10–3
slot(s)
alignment key 1–9
battery bay 3–4
docking alignment 1–8
memory 9–7
PC Card 9–3
screen protector, on keyboard 1–27
screen protector, on tablet PC 1–9
SD (Secure Digital) Card 9–5
security cable 8–10
universal attachment, on tablet PC 1–9
universal attachment, on tablet PC keyboard 1–27
socket services, PC Card 9–2
Soft Modem AT Command Reference Manual 6–8
software
AT command 6–8
AutoPlay 4–8
backup 10–1
Journal 2–9
modem 3–19, 6–1, 6–8
Outlook 2–9

Power Meter 3–10
setting up 2–2
Setup utility 2–12
Tablet PC Input Panel 2–17
Task Manager 2–11
Windows Security window 2–11
speakers, external
audio-out jack 5–5
connecting 5–6, 8–1
speakers, internal 5–3
specifications
modem 6–1, 11–3
network 7–1
tablet PC 11–1
Standby
avoiding while playing media 4–8
initiated during critical low-battery condition 3–13
initiating 3–15
power/standby light 1–4
resuming from 3–15
stylus.*See* pen
sunlight, affecting tablet PC 10–2
support, HP customer 10–16
Suspend. *See* Standby
switch
attachment release, on keyboard 1–27
attachment release, on tablet PC 1–14
power 1–4
See also button(s); latch
system hard drive. *See* hard drive, system
system lockup 2–11

T

tab button
identified 1–6
procedures 2–11
responding to Network Service Boot prompt with 7–5
Tablet PC Input Panel application 2–17
Tablet PC Input Panel launch button
identified 1–3
procedures 2–8
tablet PC keyboard. *See* keyboard, tablet PC
telephone jack (RJ-11)
connecting 6–3
modem cable 1–21
telephone line(s)
analog vs. digital 6–6
connecting modem to 6–2
temperature(s)
operating 11–2
overheating 1–10
storage, for battery packs 3–20
thermal vent 1–10
tilt
adjustment 1–26
feet 1–18
tone dialing mode 6–6
traveling with the tablet PC
Auto/Air Cable 3–15
Automobile Power Adapter/Charger 3–15

battery pack temperature considerations 3–20
connecting the modem 6–2, 6–5
modem approvals label 1–17
operating environment specifications 11–2
wireless certification label 1–17
troubleshooting
modem problems, while traveling 6–6
resources 10–17
turning off the tablet PC 2–11
tutorials
Journal 2–9
Tablet PC Input Panel 2–9
Type I, II, and III PC Cards 9–2

U

ultraviolet light, affecting tablet PC 10–2
universal attachment slots
on tablet PC 1–9
on tablet PC keyboard 1–27
USB
connector 1–11
devices, connecting 8–2
External MultiBay connector 1–11
hub 8–2
utilities. *See* software

V

vent 1–10
virus protection software 10–1
volume controls
adjusting volume with 5–1
conserving power with 3–19

W

Windows applications key 1–24
Windows Security button
identified 1–5
procedures 2–11
wireless LAN, internal
antennas 1–7, 1–10
documentation 7–5
optimizing transmissions 1–7
wireless LAN activity light 1–2
worldwide telephone numbers, HP 10–17

X

x-rays, affecting hardware 10–15

Z

zoomed video 9–2