Revision Note

NFC
(Near Field Communication)

NXP NPC300 Module

Project Name	NFC (NXP NPC300) Module
Document Rev.	5.0
FOXCONN Part No.	T77H747.10
Module Rev.	005
FRU Part No.	01AX745
Customer Part No.	SW10K97523
FOXCONN Label Rev	00S0

Prepared by	Reviewed by	Approved by
Bandy.Jiang	Wei.Liao	Chang-Fu Lin

Revision History

Revision	Date	Originator	Comment
1.0	2016/01/28	Smile. Ming	Initial release
2.0	2016/04/20	Bandy.Jiang	1> Add pin 1 marking for mechanical drawing. 2> Add SM bus support in addition to I2C bus. (in page 4,5) 3> Add description of pin9 (TX_PWR_REQ) signal with active high 1.8V level output. (in page 15) 4> Change the PN of antenna connector from BM05B-ACHSS-A-GAN-ETF(LF)(SN) to BM05B-ACHKS-A-GAN-ETF(HF) 5> Update material in shielding drawing. 6> Following the latest schematic, update the material description into BOM 7> Add Tray ID label, Carton label, Pallet label into label information 8> Update packing information
3.0	2016/04/26	Bandy.Jiang	1> Update Module picture in page 18 2> Update packing information in page 23~24 3> Update vendor PN of host interface connector in page 15
4.0	2016/06/24	Bandy.Jiang	1> Remove R5 from BOM. 2> Change Foxconn project name from T77H747.00 to T77H747.10 3> Change FRU part No. from 00JT548 to 01AX745. 4> Based on above change list, update module picture, BOM, label contents and packing information.
5.0	2016/06/28	Bandy. Jiang	1> Change Host JST part number from ACHR-05V-A-S to ACHR-05V-A-K(HF) in page 14

T77H747.10 is made in China,
Manufactured by HongFuJin Precision Industry Co., LTD
Manufacture Site: ChongQing
http://www.foxconn.com

Content

1. INTRODUCTION....4
1.1 SCOPE....4
1.2 FUNCTION....4
1.3 HARDWARE BLOCK DIAGRAM....5
2. ELECTRICAL CHARACTERISTICS....6
2.1 OPERATING CONDITIONS....6
2.1 HOST INTERFACE CHARACTERISTICS....7
2.2 POWER-UP SEQUENCE....8
2.3 POWER-DOWN SEQUENCE....9
2.4 FUNCTION TIMING CHARACTERISTICS....9
3. NFC CONTACTLESS STANDARD CONFORMANCE....10
3.1 FREQUENCY INTEROPERABILITY....10
3.2 SUPPORTED SMART CARD TYPES....10
3.3 CONTACTLESS INTERFACE UNIT....11
4. MECHANICAL ARCHITECTURE....12
4.1 MODULE MECHANICAL DRAWING....12
4.2 ANTENNA INTERFACE OF NFC MODULE....13
4.3. HOST INTERFACE OF NFC MODULE....15
4.4. SHIELDING COVER OF NFC MODULE....18
4.5. PICTURE OF NFC MODULE....18
5. PCB PATTERN OF NFC MODULE....19
5.1 PCB COMPONENT PLACEMENT....19
5.2 PCB STACK UP AND MATERIALS....19
6. BOM (BILL OF MATERIALS) OF NFC MODULE....20
7. MARKING INFORMATION....21
8. PACKING INFORMATION....23

1. Introduction

The T77H747.10 is an NFC module designed for integration in computer or portable equipment and consumer devices compliant with NFC standards (NFC Forum, NCI, ISO/IEC 14443 and ISO/IEC 15693) etc. This module is based on NXP NPC300 solution, which is a highly integrated transmission module for contactless communication at 13.56MHz.

1.1 Scope

The NFC module RF protocols supported:

- NFCIP-1, NFCIP-2 protocol
- NFC Forum device 1.3
- ISO/IEC 14443A, ISO/IEC 14443B
- ISO/IEC 15693/ICODE VCD mode
- FeliCa PCD mode/PICC mode
- MIFARE PCD encryption mechanism(MIFARE 1K/4K)
- MIFARE PICC mode
- NFC Forum tag (type 1/type 2/type 3/type 4/type V)

1.2 Function

- NFC Features
  - Reader & Writer mode
  - Peer-to-Peer Communication mode
  - Card emulation mode

- I^2C-bus and SM-bus compatible for host Interface

- Windows 8 Logo Device Requirement compliant
  - NFC Forum Wave1 Certification
  - LLCP
  - SNEP

- Windows 10 Logo system Requirement compliant
  - Peer to Peer Communication over 2cm distance less than 10cm

- Modular certification
  - FCC
  - CE
  - UL/CB
  - meet other regulatory requirements (as defined by 108 countries)

(Remark: Regulatory Certification is not started at this phase)

- Support Intel Windows 7/8.x/10 platform

- RoHS and Green Compliant

1.3 Hardware block diagram

The T77H747.10 NFC module is based on NXP NPC300 solution with includes ARM microcontroller core, EEPROM, demodulator and decoder, power management unit, host interface. This module is powered from the host (5V) and interfaces to the host with I^2C -bus compatible signals, on-board 27.12 MHz XTAL. Also includes on board low profile FPC/FFC 12pin connector for host interface and 5pin WTB antenna connector for antenna interface.

Form factor: 20.0mm x13.0mm x 2.1mm (typical) NFC module

Host Interface: I^2C and SM bus compatible interface with 12-pin FPC connector

PCB: 4-layers HDI design

The functional block diagram is shown as below:

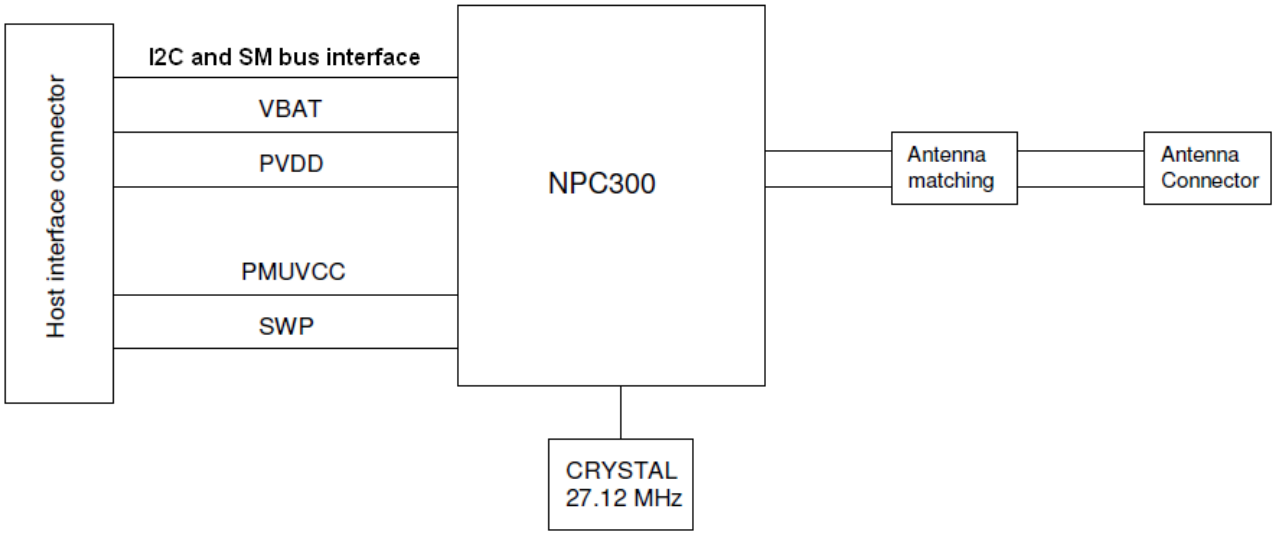

2. Electrical Characteristics

2.1 operating conditions

Absolute Maximum Rating

Symbol	Condition	Min.	Typ.	Max	Unit
VBAT	Respect to GND	--	5.0	6.0	V
PVDD	Respect to GND	--	3.3	4.35	V
ESD Limit Level	HBM	--	--	+/-1.0	KV
	CDM	--	--	+/-500	V
Operating Temperature	--	0	+25	+70	℃
Storage Temperature	--	-20	+25	+85	℃
Storage Humidity	--	0	--	+85	%

Recommended Operating Condition

Symbol	Condition	Min.	Typ.	Max	Unit
VBAT	Respect to GND	4.5	5.0	5.5	V
PVDD	Respect to GND	3.0	3.3	3.6	V
PMUVCC	Respect to GND	1.62	1.8	1.98	V
VDD	Respect to GND	1.65	1.8	1.95	V
VDD(SIM)	Respect to GND	1.62	1.8	1.98	V

Remark: VDD for TX_PWR_REQ referred voltage, VDD(SIM) for SWIO_UICC referred voltage.

Power Consumption

Condition		Min.	Typ.	Max	Unit
Power consumption	Reader mode (PCD active)	--	130	--	mA
	Reader mode (PCD standby)	--	50	--	uA
	Peer to peer mode (active)	--	130	--	mA
	Peer to peer mode (standby)	--	50	--	uA
	Continue TX mode	--	130	--	mA
	Hard Power Down mode	--	10	--	uA

2.1 Host interface characteristics

I²C-bus Interface

The I²C-bus Interface implements a slave I²C-bus interface with integrated shift register, shift timing generation and slave address recognition.

I²C-bus Standard mode (100 KHz SCL), Fast mode (400 KHz SCL) and High-speed mode (3.4 MHz SCL) are supported.

I²C-bus timings

Here below are timings and frequency specifications.

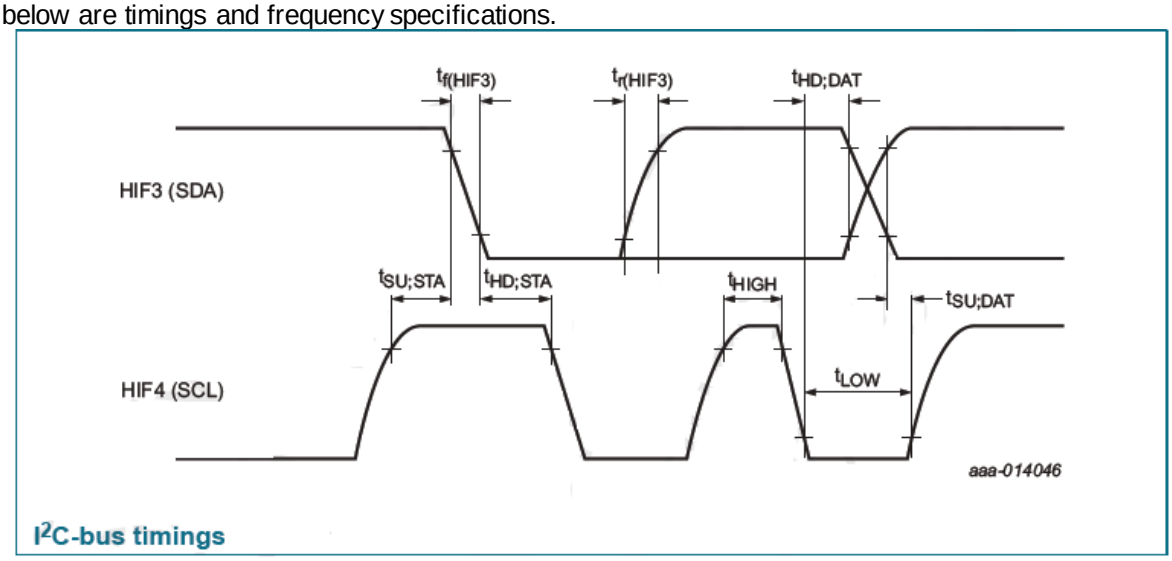

High-speed mode I2C-bus timing specification

Symbol	Parameter	Conditions	Min	Max	Unit
$f_{CLK(HIF4)}$	Clock frequency on pin HIF4	I²C-bus SCL; C_b<100pF	0	3.4	MHz
$t_{SU;STA}$	Set-up time for a repeated START condition	C_b<100pF	160	-	ns
$t_{HD;STA}$	Hold time(repeated) START condition	C_b<100pF	160	-	ns
t_{LOW}	LOW period of the SCL clock	C_b<100pF	160	-	ns
t_{HIGH}	HIGH period of the SCL clock	C_b<100pF	60	-	ns
$t_{SU;DAT}$	Date set-up time	C_b<100pF	10	-	ns
$t_{HD;DAT}$	Data hold time	C_b<100pF	0	-	ns
$t_{r(HIF3)}$	Rise time on pin HIF3	I²C-bus SDA; C_b<100pF	10	80	ns
$t_{f(HIF3)}$	Fall time on pin HIF3	I²C-bus SDA; C_b<100pF	10	80	ns
V_{hys}	Hysteresis voltage	Schmitt trigger inputs; C_b<100pF	0.1*V_{PVDD}	-	V

Fast mode I2C-bus timing specification

Symbol	Parameter	Conditions	Min	Max	Unit
$f_{CLK(HIF4)}$	Clock frequency on pin HIF4	I²C-bus SCL; C_b<400pF	0	400	KHz
$t_{SU;STA}$	Set-up time for a repeated START condition	C_b<400pF	600	-	ns
$t_{HD;STA}$	Hold time(repeated) START condition	C_b<400pF	600	-	ns
t_{LOW}	LOW period of the SCL clock	C_b<400pF	1.3	-	ns
t_{HIGH}	HIGH period of the SCL clock	C_b<400pF	600	-	ns
$t_{SU;DAT}$	Date set-up time	C_b<400pF	100	-	ns
$t_{HD;DAT}$	Data hold time	C_b<400pF	0	900	ns
V_{hys}	Hysteresis voltage	Schmitt trigger inputs; C_b<400pF	0.1* V_{PVDD}	-	V

2.2 Power-up sequence

There are 2 different supplies for module which allows set up independently, therefore different power-up sequences have to be considered.

1> VBAT is set up before PVDD
This is at least the case when VBAT pin is directly connected to the battery and when module VBAT is always supplied as soon the system is supplied.

As VEN pin is referred to VBAT pin, VEN voltage shall go high after VBAT has been set.

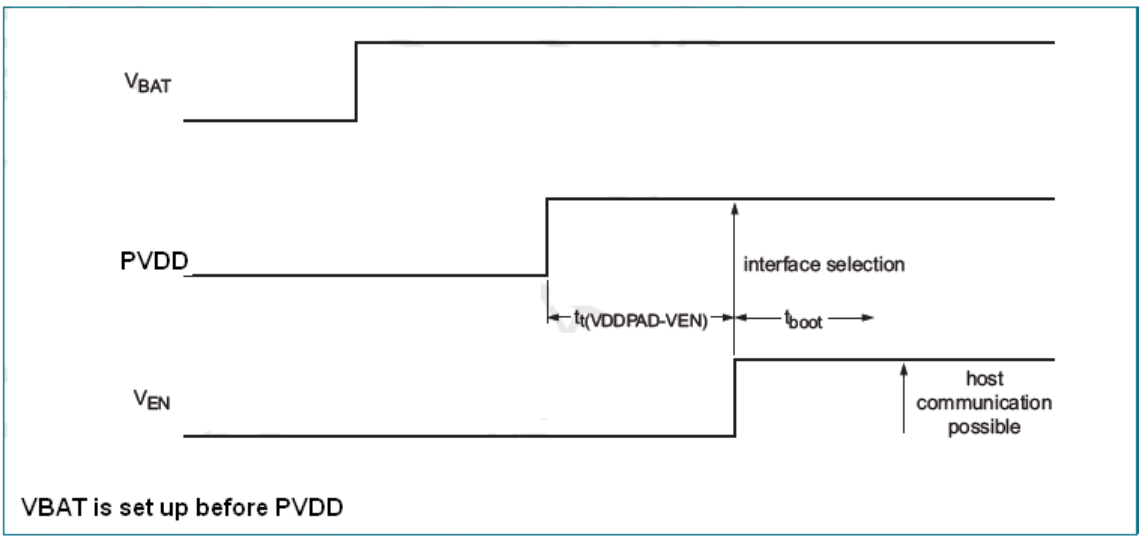

VBAT is set up before PVDD

2> PVDD and VBAT are set up in the same time
It is at least the case when VBAT pin is connected to a PMU/regulator which also supplies PVDD.

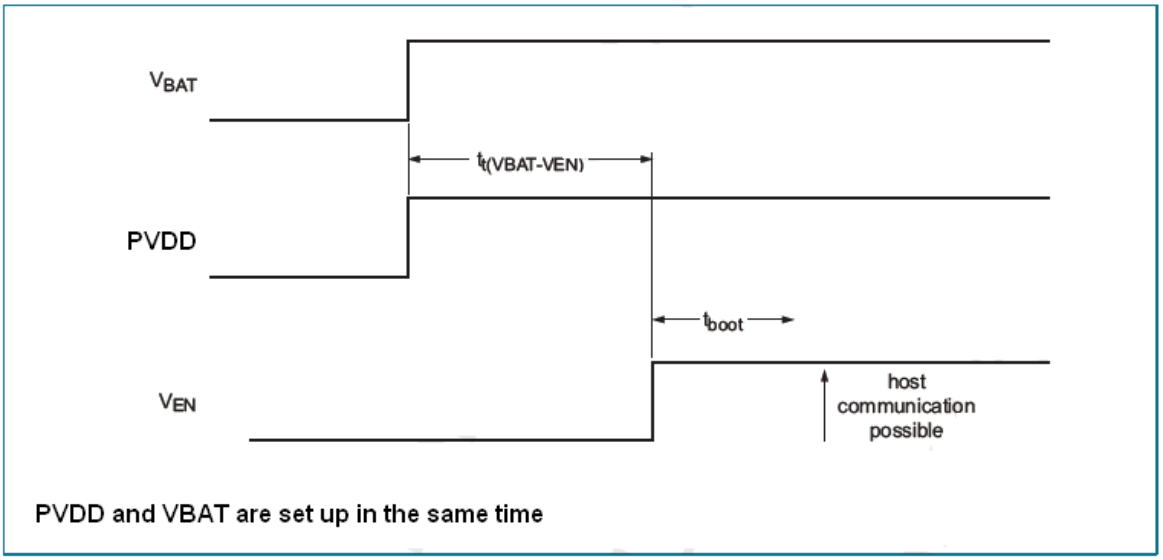

PVDD and VBAT are set up in the same time

2.3 Power-down sequence

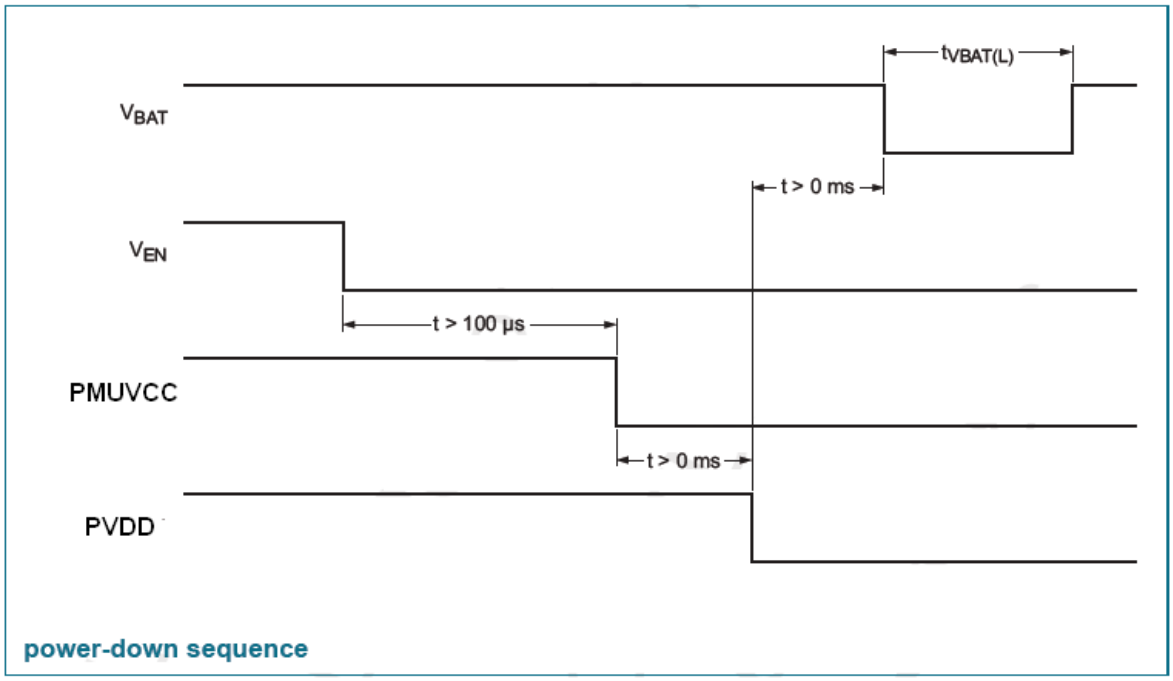

2.4 Function timing characteristics

Reset timing

Symbol	Parameter	Conditions	Min	Typ	Max	Unit
$t_{W(VEN)}$	VEN pulse width	To reset	10	-	-	us
t_{boot}	Boot time		-	-	2.5	ms

Power-up timings

Symbol	Parameter	Conditions	Min	Typ	Max	Unit
$t_{t(V_{BAT}-VEN)}$	Transition time from pin VBAT to pin VEN	VBAT,VEN Voltage=HIGH	0	0.5	-	ms
$t_{t(V_{PVDD}-VEN)}$	Transition time from pin PVDD to pin VEN	PVDD,VEN Voltage=HIGH	0	0.5	-	ms
$t_{t(V_{BAT}-V_{PVDD})}$	Transition time from pin VBAT to pin PVDD	VBAT,PVDD Voltage=HIGH	0	0.5	-	ms

Power-down timings

Symbol	Parameter	Conditions	Min	Typ	Max	Unit
$t_{VBAT(L)}$	Time V_{BAT} LOW		20	-	-	ms

Download mode timings

Symbol	Parameter	Conditions	Min	Typ	Max	Unit
$T_{t(DWL\_REQ-VEN)}$	Transition time from pin DWL_REQ to pin VEN	DWL_REQ,VEN voltage=HIGH	0	0.5	-	ms

3. NFC contactless standard conformance

3.1 Frequency interoperability

When in communication, NFC module is generating some RF frequencies. It is also sensitive to some RF signals as it is looking from data in the field.
In order to avoid interference with others RF communication, it is required to tune the antenna matching for antenna board.
(Remark: The antenna matching tuning is responsible for antenna vendor)

It must limit the RF frequency dispersion to 13.56MHz +/-50ppm.

3.2 Supported smart card types

Card Types	Read CSN (Card Serial Number)	Read/Write application data area	Supported baud rates
NFC Forum Type1 Tag	Yes	Yes	106 kbps
NFC Forum Type2 Tag	Yes	Yes	106 kbps
NFC Forum Type3 Tag	Yes	Yes	212, 424 kbps
NFC Forum Type4 Tag	Yes	Yes	106 kbps
NFC Forum TypeV Tag	Yes	Yes	106 kbps
ISO/IEC 14443 Type A compliance cards	Yes	Yes (with application)	106 kbps
Mifare Classics 1K,4K	Yes	Yes (with application)	106 kbps
Mifare DESFire	Yes	Yes (with application)	106 kbps
Mifare Ultralight	Yes	Yes (with application)	106 kbps
Mifare Plus	Yes	Yes (with application)	106 kbps
(Mifare) SmartMX	Yes	Yes (with application)	106 kbps
ISO/IEC 14443 Type B compliance cards	Yes	Yes (with application)	106 kbps
FeliCa general card	Yes	Yes (with application)	212, 424 kbps
FeliCa Edy card	Yes	Yes (with application)	212, 424 kbps
FeliCa Suica card	Yes	Yes (with application)	212, 424 kbps
FeliCa PKI Option card	Yes	Yes (with application)	212, 424 kbps
HID iCLASS Seos	Yes	Yes (with application)	106 kbps

3.3 Contactless interface unit

The NFC module supports various communication modes at different transfer speeds and modulation schemes. The following chapters give more detailed overview of selected communication modes.

1> Reader/Writer communication modes

Generally 5 reader/writer communication modes are supported:

- PCD reader/writer for ISO/IEC 14443A/MIFARE

The transfer speed includes 106 kbit/s, 212 kbit/s, 424 kbit/s and 848 kbit/s.

- PCD reader/writer for ISO/IEC 14443B

The transfer speed includes 106 kbit/s, 212 kbit/s, 424 kbit/s and 848 kbit/s.

- PCD reader/writer for Jewel/Topaz tags

The transfer speed includes 106 kbit/s, 212 kbit/s, 424 kbit/s and 848 kbit/s.

- PCD reader/writer for FeliCa cards

The transfer speed includes 212 kbit/s, 424 kbit/s.

- VCD reader/writer for ISO/IEC 15693/ICODE

The transfer speed includes 1.65 kbit/s, 26.48 kbit/s.

2> Peer to Peer communication modes

(ISO/IEC 18092, Ecma 340 NFCIP-1 communication modes)

An NFCIP-1 communication takes place between 2 devices:

- NFC initiator: generates RF field at 13.56 MHz and starts the NFCIP-1communication.
- NFC Target: responds to NFC initiator command either in a load modulation scheme in Passive communication mode or using a self-generated and self-modulated RF field for Active communication mode.

The NFCIP-1 communication differentiates between Active and Passive communication modes.

- Active communication mode means both the NFC initiator and the NFC target are using their own RF field to transmit data
- Passive communication mode means that the NFC target answers to an NFC initiator command in a load modulation scheme. The NFC initiator is active is terms of generating the RF field.

The NFC module supports the Active Target, Active Initiator, Passive Target and Passive Initiator communication modes at the transfer speeds 106 kbit/s, 212 kbit/s and 424 kbit/s.

3> Card communication modes

The NFC module can be addressed as an ISO/IEC 14443A or ISO/IEC 14443B cards. This means that NFC module can generate an answer in a load modulation scheme.
The transfer speed includes 106 kbit/s, 212 kbit/s and 424 kbit/s.

4. Mechanical Architecture

4.1 Module Mechanical Drawing

Dimension (WxL): 20mm x 13mm, Module Max Thickness: 2.2mm

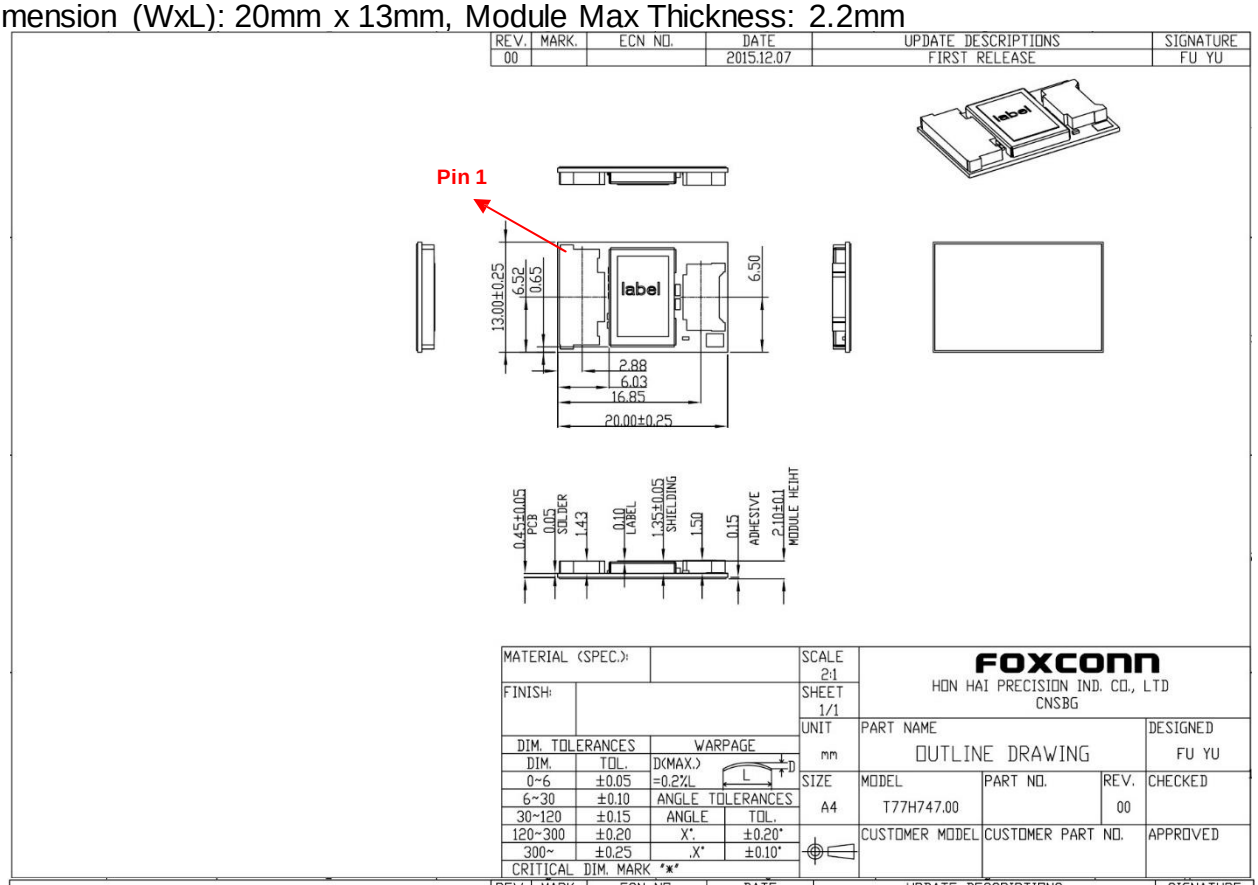

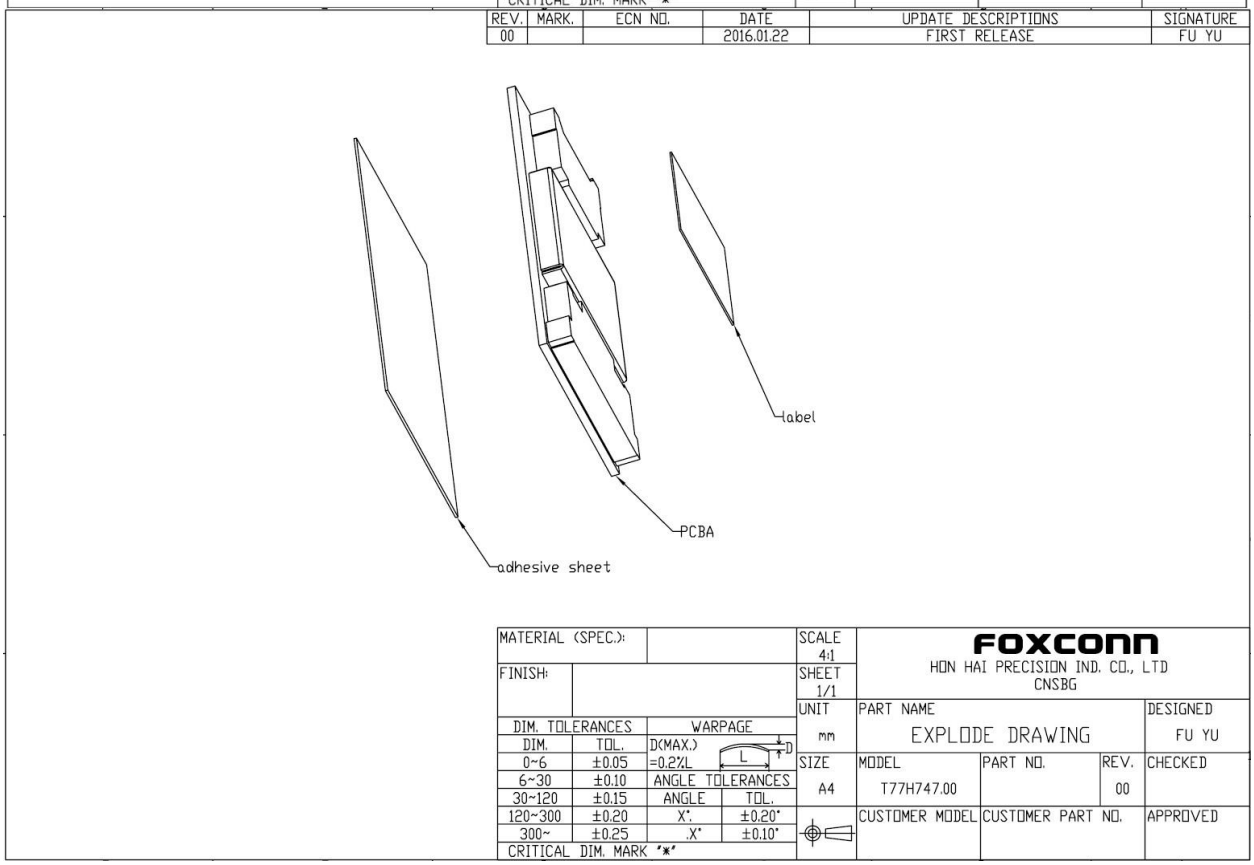

4.2 Antenna interface of NFC module

1> Antenna connector

Manufacturer: JST Manufacturer PN: BM05B-ACHKS-A-GAN-ETF(HF)

Connector Type	Manufacture PN	Size
ACH connector SMT type with 1.2mm pitch	JST : BM05B-ACHKS-A-GAN-ETF(HF)	7.8mm x 4.3mm x 1.5mm

Connector 2D drawing:

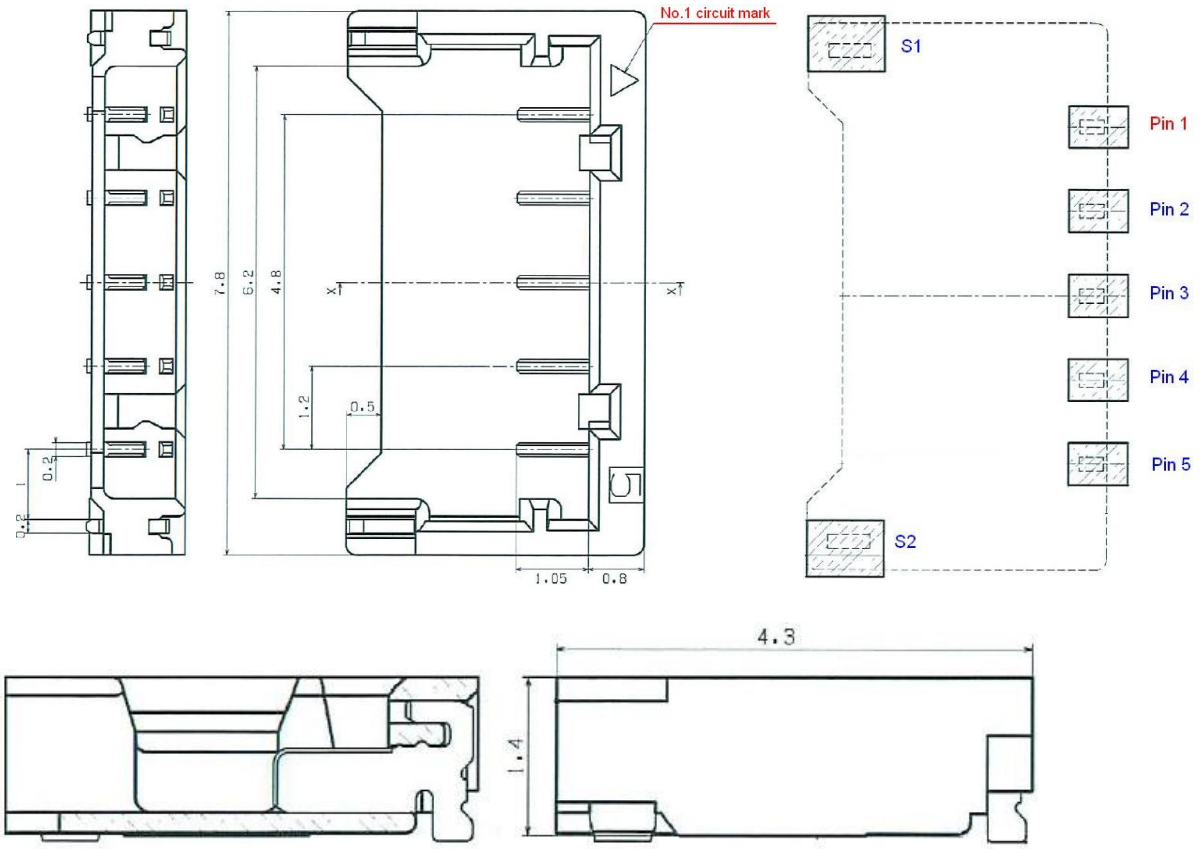

Remark: Dimension Tolerance: +/-0.3mm

Pin definition:

Pin	Symbol	I/O	Refer	Note
1	RXP	I	VDD	Positive receiver input
2	TX1	O	VDD	Antenna output1
3	GND	G	N/A	Ground
4	TX2	O	VDD	Antenna output2
5	RXN	I	VDD	Negative receiver input
S1	GND	G	N/A	Ground
S2	GND	G	N/A	Ground

Remark: P = power supply, G = ground, I = input, O = output, I/O = input/output

2> Recommend Antenna cable design.

T77H747.00 Module connector side

Pin#	Signal name to antenna (from NFC module)
1	RXP (Antenna reception path#1)
2	TX1 (Antenna transmission wire#1)
3	GND (Antenna ground)
4	TX2 (Antenna transmission line#2)
5	RXN (Antenna reception path #2)

Antenna connector side

Pin#	Signal name to antenna (from NFC module)
5	RXP (Antenna reception path#1)
4	TX1 (Antenna transmission wire#1)
3	GND (Antenna ground)
2	TX2 (Antenna transmission line#2)
1	RXN (Antenna reception path #2)

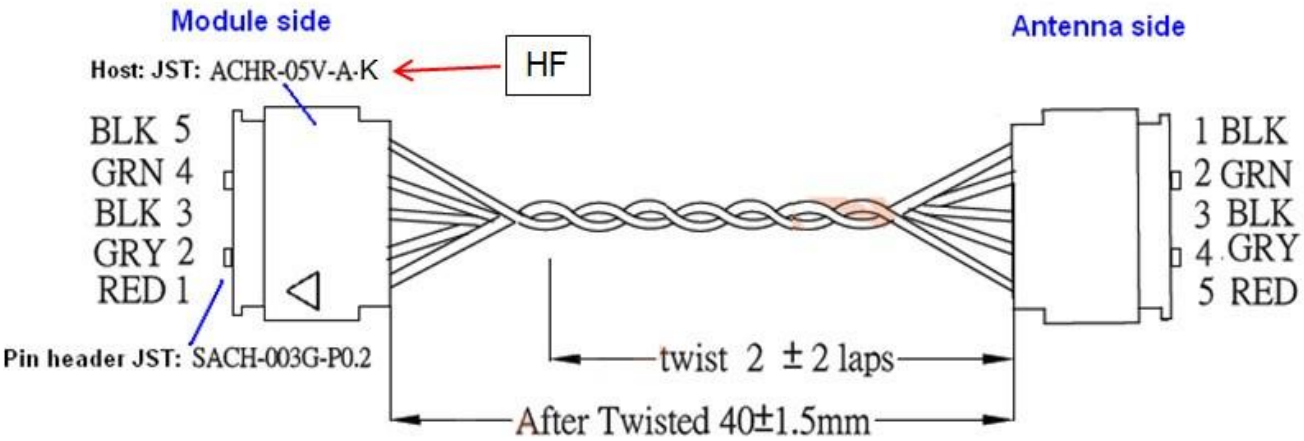

4.3. Host interface of NFC module

1> Host interface connector

Manufacturer: KYOCERA Manufacturer PN: 046811612000846 +

Connector	Manufacture PN	Size
FPC/FFC connector SMT type with 0.5mm pitch	KYOCERA: 046811612000846+	11.73mm x 4.79mm x 1.28mm

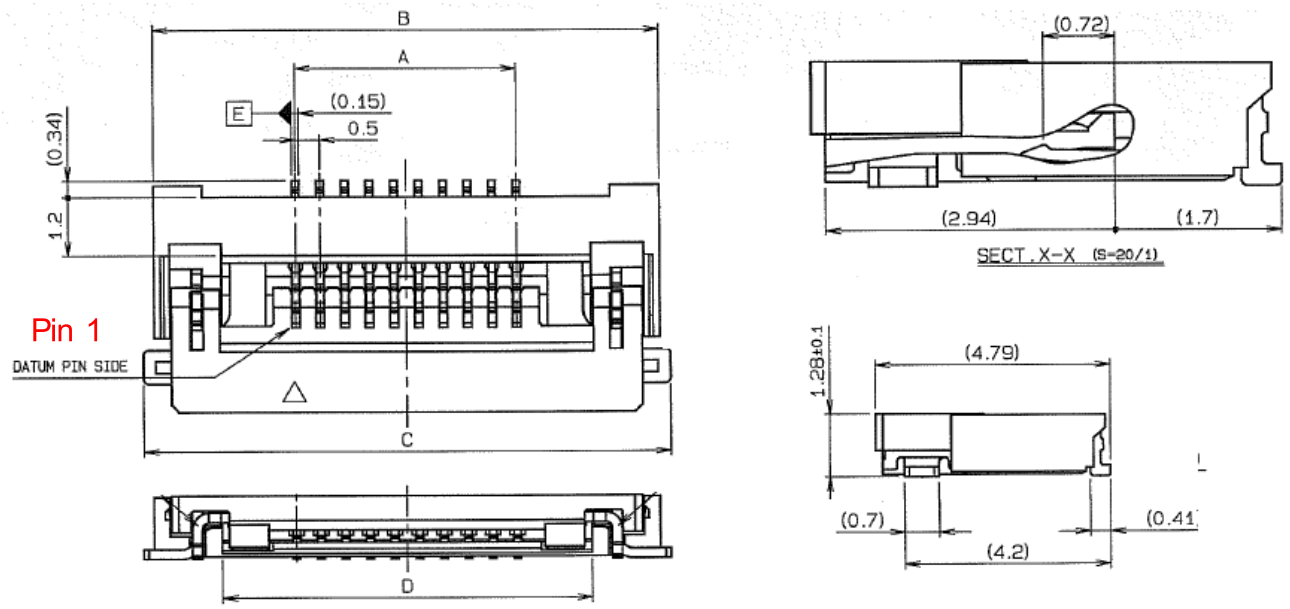

NO.OF POS.	A	B	C	D
12	5.5	11.3	11.73	8.52

Remark: The connector is bottom conduct with golden plating of FPC cable

Pin	Symbol	Pin Type	Refer	Description
1	VBAT	Input Power	N/A	Power supply from system (4.5V - 5.5V)
2	PVDD	Input Power	N/A	Power supply to I/O (3.0V – 3.6V)
3	I2C_SDA	I/O	PVDD	I2C data
4	I2C _SCL	I	PVDD	I2C clock
5	GND	G	N/A	Ground
6	IRQ	O	PVDD	Interrupt from NFC module to the host (Host_Wake)
7	NFC_Presence	G	N/A	Connect to ground for NFC module presence bit (Low active)
8	VEN	I	VBAT	Reset pin. Set the device in Hard Power Down
9	TX_PWR_REQ	O	VDD	(External TX power supply request) (Active high 1.8V level output) Indicates NFC busy state during NFC communication to touchpad.
10	PMUVCC	Input Power	N/A	Power supply to UICC(1.78V~3.3V)
11	SWIO_UICC	I/O	VDD(SIM)	SWP data connection to SIM
12	DWL_REQ	I	PVDD	Firmware download control pin
S1	GND	G	N/A	Ground
S2	GND	G	N/A	Ground

Remark: P = power supply, G = ground, I = input, O = output, I/O = input/output

2> Pin characteristics

VEN input pin characteristics

Symbol	Parameter	Conditions	Min	Typ	Max	Unit
V_{IH}	HIGH-level input voltage		1.1	-	V_{BAT}	V
V_{IL}	LOW-level input voltage		0	-	0.4	V
I_{IH}	HIGH-level input current	VEN voltage=V_{BAT}	-	-	1	µA
I_{IL}	LOW-level input current	VEN voltage=0V	1	-	-	µA
C_i	Input capacitance		-	5	-	pF

Pin characteristics for IRQ, and TX_PWR_REQ

Symbol	Parameter	Conditions	Min	Typ	Max	Unit
V_{OH}	HIGH-level output voltage	I_{OH}<3mA	-	-	-	-
		IRQ and CLK_REQ pin	V_{PVDD} -0.4	-	V_{PVDD}	V
		TX_PWR_REQ pin	V_{DD}-0.4	-	V_{DD}	V
V_{OL}	LOW-level output voltage	I_{OL}<3mA	0	-	0.4	V
C_L	Load capacitance		-	-	20	pF
t_f	Fall time	C_L=12pF max				
		High speed	1	-	3.5	ns
		Low speed	2	-	10	ns
t_r	Rise time	C_L=12pF max				
		High speed	1	-	3.5	ns
		Low speed	2	-	10	ns
R_{pd}	Pull-down resistance	IRQ and CLK_REQ pins [1]	0.35	-	0.85	MΩ
		TX_PWR_REQ pin [1]	55	-	120	kΩ

[1] Activated in HPO and Monitor states.

Input pin characteristics for DWL_REQ

Symbol	Parameter	Conditions	Min	Typ	Max	Unit
V_{IH}	HIGH-level input voltage	V_{PVDD}=1.8V	0.65*V_{PVDD}	-	-	V
V_{IL}	LOW-level input voltage	V_{PVDD}=1.8V	-	-	0.35*V_{PVDD}	V
V_{IH}	HIGH-level input voltage	V_{PVDD}=3V	2	-	-	V
V_{IL}	LOW-level input voltage	V_{PVDD}=3V	-	-	0.8	V
I_{IH}	HIGH-level input current		-	-	1	µA
I_{IL}	LOW-level input curent		1	-	-	µA
C_i	Input capacitance		-	5	-	pF
R_{pd}	Pull down resistance	Extra pull-down	0.35	-	0.85	MΩ

Pin characteristics for HIF3(used as I^2C-bus SDA) and HIF4(used as I^2C-bus SCL)

Symbol	Parameter	Conditions	Min	Typ	Max	Unit
V_{OL}	LOW-level output voltage	I_{OL}<3mA [1]	0	-	0.4	V
C_L	Load capacitance		-	-	10	pF
t_f	Fall time	C_L=100 pF; [1] $R_{pull-up}$=2kΩ; Standard and Fast mode	30	-	250	ns
		C_L=100 pF; [1] $R_{pull-up}$=1kΩ; High-speed mode	80	-	110	ns
t_r	Rise time	C_L=100 pF; [1] $R_{pull-up}$=2kΩ; Standard and Fast mode	30	-	250	ns
		C_L=100 pF; [1] $R_{pull-up}$=1kΩ; High-speed mode	10	-	100	ns
V_{IH}	HIGH-level input voltage		0.7 *V_{PVDD}	-	V_{PVDD}	V
V_{IL}	LOW-level input voltage		0	-	0.3*V_{PVDD}	V
I_{IH}	HIGH-level input current	V_i= V_{PVDD}; high impedance	-	-	1	µA
I_{IL}	LOW-level input current	V_i=0V; high impedance	-1	-	-	µA
C_i	Input capacitance		-	5	-	pF

[1] Only for pin HIF3(I^2C-bus SDA), HIF4(I^2C-bus SCL) is only used as input.

SWIO_UICC pin characteristics

Symbol	Parameter	Conditions	Min	Typ	Max	Unit
V_{OH}	HIGH-level output voltage	I_{IH}=1mA; [1] $I_{DD(SIM)}$=50mA; $V_{DD(SIM\_PMU)}$=2.75V; $V_{DD(SIM\_PMU)}$ in class B	1.4	-	-	V
V_{OH}	HIGH-level output voltage	I_{SIM_SWIO}=1mA; [1] $I_{DD(SIM)}$=30mA; $V_{DD(SIM\_PMU)}$=1.67V; $V_{DD(SIM\_PMU)}$ in class C	0.85 $V_{DD(SIM)}$	-	-	V
V_{OH}	HIGH-level output voltage	I_{IH} =1mA; [1] $I_{DD(SIM)}$=5mA; $V_{DD(SIM\_PMU)}$=0V; $V_{DD(SIM)}$-V_{DDD}	0.85 $V_{DD(SIM)}$	-	-	V
V_{OL}	LOW-level output voltage	0μA<I_{IL}<20Ma [1]	-	-	0.15$V_{DD(SIM)}$	V
I_{IH}	HIGH-level input current		-	300	-	μA

[1] To allow for overshoot, the voltage on SWIO shall remain between -0.3V and V_{OHmax} +0.3V during dynamic operation.

3> Recommend FPC cable

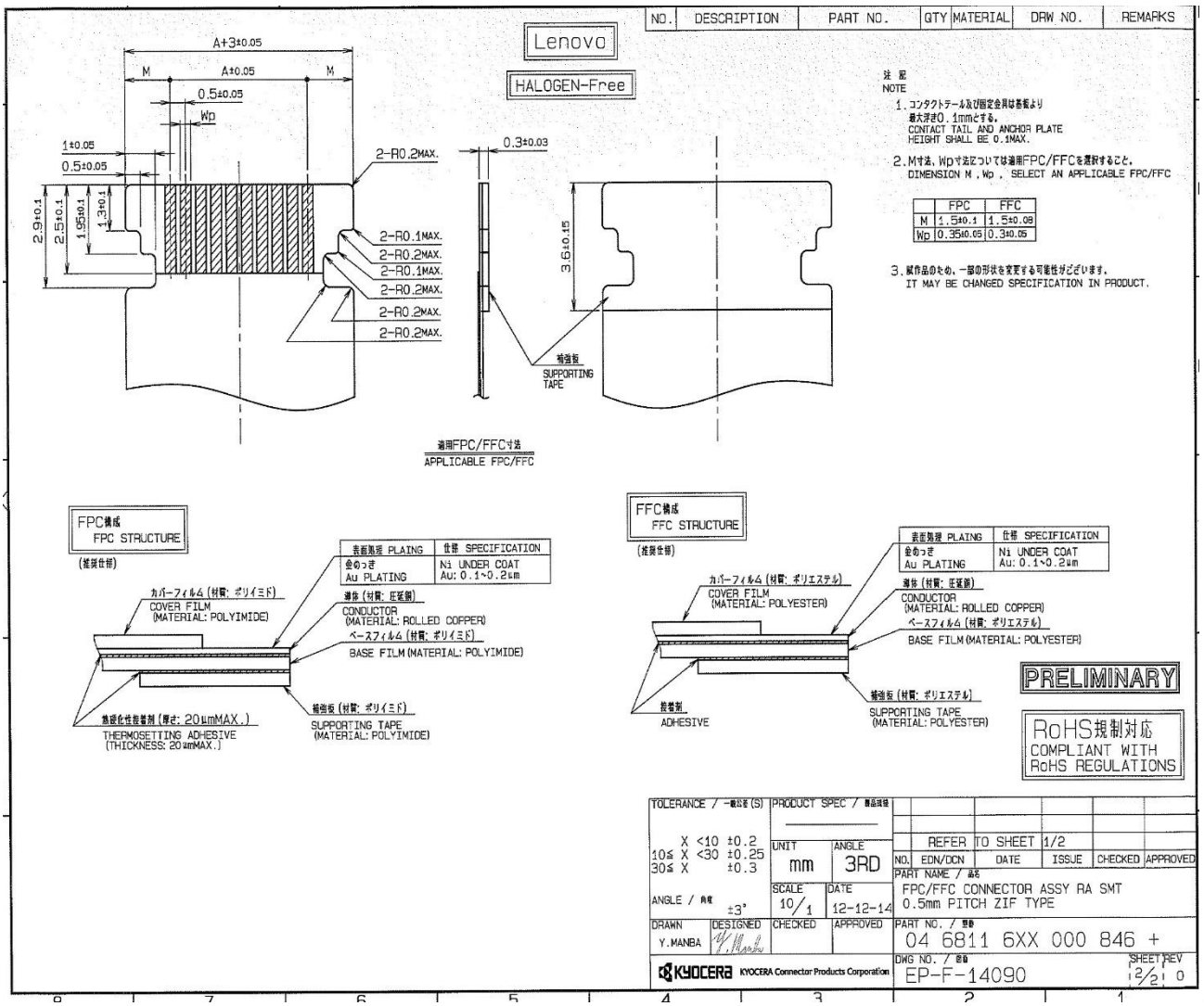

4.4. Shielding Cover of NFC module

Dimension (L x W x H): 11.69mm x 7.88mm x 1.35mm, Thickness: 0.15mm

Materials: KU360S

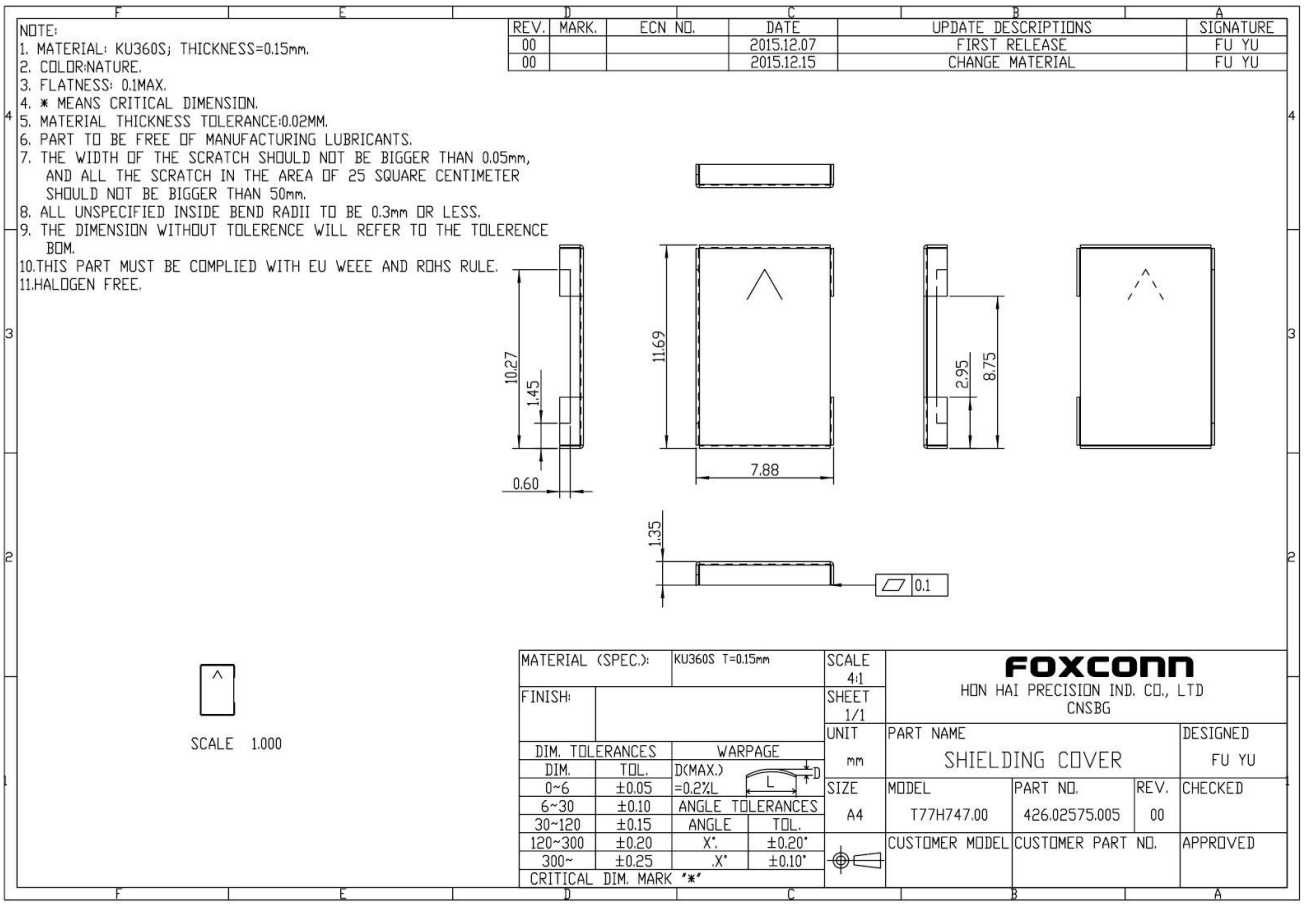

4.5. Picture of NFC module

(Top view)

(Bottom view)

7. Marking Information

Label information

REV.	MARK	ECR/ECN NO.	DATE	UPDATE DESCRIPTION	SIGNATURE
0	N/A	N/A	2016.06.24	First Release	

2.MAC ID label (503.01251.005)

Human readable:

1. XXXXXXXXXX-VVSS;
   XXXXXXXXXX---MO工单号
   VVSS---label版本
   VV为工程版本
   SS为A300/A400产品之版本
2. T77H747.10;Foxconn PN
3. FRU P/N:01AX745
   FRU P/N:01AX745--fixed
4. EC NO:1498230
   EC NO:1498230--fixed

5. 8SSW10K97523F1CHYMDSSSS
   8S-Fixed
   SW10K97523-Lenovo P/N
   F1CH-Header code
   YMD:Year, Month and Date,
   Y : Last digit of year (for example, 1 for 2001 and 2 for 2002)
   M: Month (1=January,2=February,3=March,4=April,5=May 6=June,7=July,8=August,9=September,A=October, B=November,C=December)
   D: Day of the month (1=1, 2=2, 3=3, 4=4, 5=5, 6=6, 7=7, 8=8,9=9,A=10,B=11,C=12,D=13,E=14,F=15,G=16,H=17, J=18,K=19,L=20,M=21,N=22,P=23,R=24,S=25,T=26,V=27, W=28,X=29,Y=30,Z=31 (I, O, Q, U are not used in the date code sequence)
   SSSS: serial number, from 0000 to ZZZZ
   "I", "O","Q" and "U" are not used in the serial number, all other characters are used for new build serial numbers
   All of the font:Arial. 0.6mm

Scanable:
A. 8SSW10K97523F1CHYMDSSSS;
   Barcode type:2D barcode, Data Matrix, ECC200,
   Barcode size:3.5*3.5mm

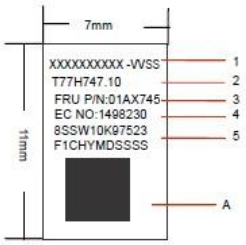

scale:4:1

標籤製作黏貼方式/T77H747.10/00/2 OF 7

MATERIAL (SPEC.)	SCALE	FOXCONN
50# Mylar	1:1	HON HAI PRECISION IND. CO., LTD. CNSBG
FINISH	SHEET 1/1	

Select	A	B	C	EPS	EPE	BAG	CTN	X Label	USR
0~6	0.05	0.05	0.10					0.20	
6~30	0.10	0.15	0.20	0.50	0.50	3.00		0.20	
30~120	0.15	0.20	0.30	0.50	0.50	5.00	2.00	0.25	
20~300	0.20	0.30	0.40	1.00	1.00	10.00	3.00	0.30	
300~450	0.25	0.40	0.50	2.00	2.00	15.00	5.00	0.50	
450~600	0.30	0.50	0.60	3.00	3.00	20.00	5.00	0.80	
DRAFT TOLERANCE			±0.2°		CRITICAL DIM. MARK			*	

UNIT	PART NAME		
MM	MAC ID label		
SIZE A4	MODEL T77H747.10	PART NO. 503.01251.005	DESIGNED hongjun
	CUSTOMER MODEL	CUSTOMER PART NO.	APPROVED

.Tray ID label

Foxconn PN: 503.00090.005, size: 45*8mm

Human readable:
TFYWWSSSS
Font: TRIUMVIRATE COND.(打印機自帶字體），height：6pt

Scannable:
1. Barcode type: code128
2. Barcode height: 2.96mm
3. Barcode content: TFYWWSSSS
T---Tray
F---產地代產
Y---西元年最後一碼
WW---生產周別
SSSS---流水號四碼，36進制，隔周reset為0001

具體黏貼位置請參考組立圖及包裝出貨方式， 貼於tray有缺口一側

Carton label:P/N:503.00098.005

A.XXXXXXXX: the Foxconn MO(工單號)
B.Qty : XXX
XXX:the quantity of product in carton(carton內裝的產品數量)
Barcode content:the quantity of product in carton(carton內裝的產品數量)
C.REV:VVSS
VV:the engineering version(refer to Foxconn label Rev column in the cover of the MFG document)
VV爲工程版本（參見製造文件封面Foxconn Label Rev.欄位）
SS:the version of A300/A400 product(refer to Doc Rev.in the cover of MFG document)
SS爲A300/A400產品之版本（參見製造文件封面Doc Rev.之主版本）
D.CIPPYWWXXXX
C+ production location + production line + production year + production week + Serial Number(Base on 36)
C: carton I: production location(refer to attachment of the last page)
PP:Production line YWW: Production year & production week.
XXXX:Serial number(Base on 36,every two week reset to 0001)

.Pallet label:P/N:503.00089.005

Follow Foxconn standard
PIPPYWWXXXX:
P+ production location + production line + production year + production week + Serial Number(Base on 36)
P: Pallet
I: Production location(refer to attachment on page 3)
PP: production line
Y: the last digital of production year
WW: production week
XXXX: Serial number(Base on 36,every two week reset to 0001)
VVSS:
VV: the engineering version (refer to Foxconn label Rev
column in the cover of the MFG document)
SS: the version of A300/A400 product (refer to Doc Rev.in the cover of MFG document)

8. Packing information

VER. MARK	ECR/ECN NO.	DATE	UPDATE DESCRIPTION	SIGNATURE
00		2016. 06. 24	First release	hong jun
01				

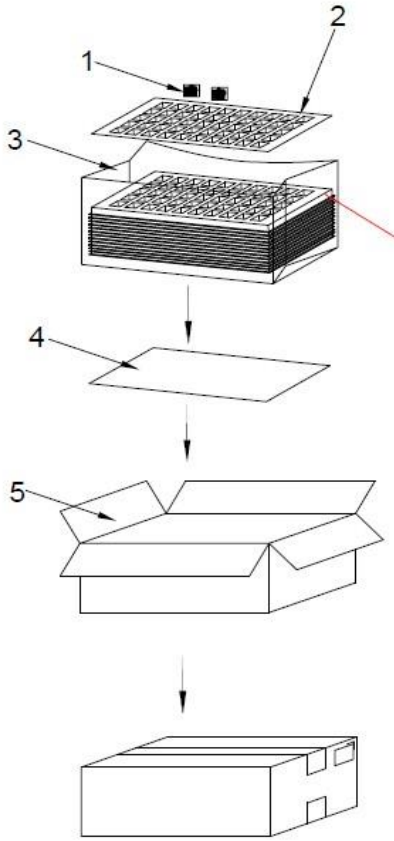

the picture just for reference

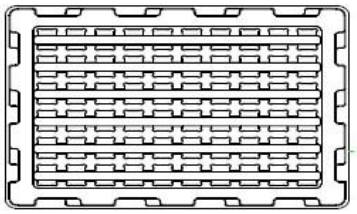

1. Qty:60pcs/layer, 15layers/carton
2. The top layer used as shield cover, without products.
3. The two neighboring layers always laid reversely.

5	Carton	520.00521.005	1/840
4	Paper board	522.01672.015	1/840
3	PE bag	510.00464.005	1/840
2	Tray	513.00434.005	15/840
1	Drier	528.00011.005	2/840

Carton outer size:278*233*134

Carton=15 layers=(1*0+14*60)pcs=840pcs

組立圖及包裝出貨方式/T77H747.10/00/1 OF 3

MATERIAL (SPEC.)

FINISH

SCALE

SHEET

UNIT mm

SIZE A4

FOXCONN

HON HAI PRECISION IND. CO., LTD.

PART NAME: Carton ASY

MODEL: T77H747.10

PART NO.

DESIGNED: hongjun

CUSTOMER MODEL

CUSTOMER PART NO.

APPROVED

Select Dim. / Tol.	A	B	C	EPS	EPE	BAG	CTN	Label	USR
0~6	0.05	0.05	0.10					0.20	
6~30	0.10	0.15	0.20	0.50	0.50	3.00		0.20	
30~120	0.15	0.20	0.30	0.50	0.50	5.00	2.00	0.25	
120~300	0.20	0.30	0.40	1.00	1.00	10.00	3.00	0.30	
300~450	0.25	0.40	0.50	2.00	2.00	15.00	5.00	0.50	
450~600	0.30	0.50	0.60	3.00	3.00	20.00	5.00	0.80	
DRAFT TOLERANCE			±0.2°		CRITICAL DIM. MARK				*

REV.	MARK	ECR/ECN NO.	DATE	UPDATE DESCRIPTION	SIGNATURE
00			2016.6.20	First release	hong jun
01					

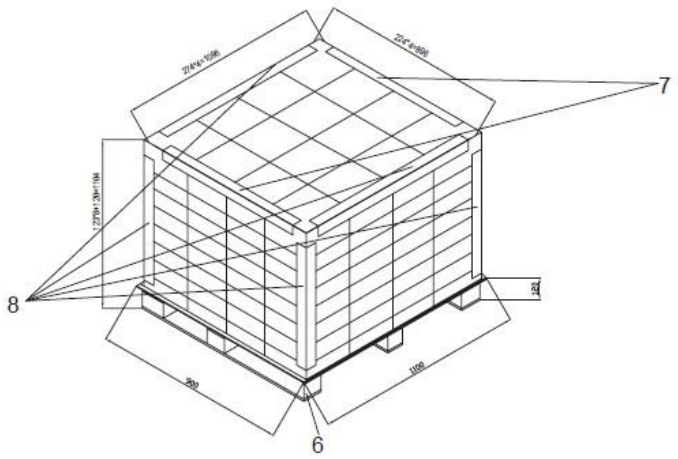

1 pallet = 8 layers= 8*16 cartons =8*16*840=107520pcs

組立圖及包裝出貨方式/T77H747.10/00/2 OF 3

Item	Description	P/N	QTY
8	Paper board bezel	522.00214.005	6/107520
7	Paper board bezel	522.00044.005	2/107520
6	Pallet	527.00010.005	1/107520

MATERIAL (SPEC.)

FINISH

Select

Dim.	A	B	C	EPS	EPE	BAG	CTN	Label	USR
0~6	0.05	0.05	0.10					0.20	
6~30	0.10	0.15	0.20	0.50	0.50	3.00		0.20	
30~120	0.15	0.20	0.30	0.50	0.50	5.00	2.00	0.25	
120~300	0.20	0.30	0.40	1.00	1.00	10.00	3.00	0.30	
300~450	0.25	0.40	0.50	2.00	2.00	15.00	5.00	0.50	
450~600	0.30	0.50	0.60	3.00	3.00	20.00	5.00	0.80	

DRAFT TOLERANCE ±0.2° CRITICAL DIM. MARK *

SCALE

SHEET

UNIT

SIZE

FOXCONN
HON HAI PRECISION IND. CO., LTD.
CNSBG

PART NAME: Pallet ASM

MODEL: T77H747.10

PART NO.

DESIGNED: hongjun

CUSTOMER MODEL

CUSTOMER PART NO.

APPROVED

9. Reliability Test plan

No	Item	Test Condition	Qty	Criteria	Result
1	Pull test & Cross Section (2pcs) Cross Section: 1pcs Pull Test: 1pcs	1. Visual inspection: All locations 2. Cross section: BGA/Connector/PTH Hole/Via Hole (SMT/PIH) 3. Pull strength: 0.4mm/0.5mm pitch QFP	2	1. Visual Inspection – Compliance with IPC-A-610D Class 3 & 39T0261; 2. Function test Pass; 3. Cross section - No separation - Allowable Crack Length: Max. 25% of pad diameter 4. Pull test - 800g for 0.4mm pitch QFP, 1kg for 0.5mm pitch QFP	TBD
2	Low Temperature Test	4. Power on; 5. Temp.= -40 ; 6. Test Period = 240hrs.	2	Pls refer to ATC	TBD
3	Hot Start Test	1.Power Off , 2.Temperature=100 3.Test period=96 Hours 4.Power on 3times	2	1. Visual Inspection – Compliance with IPC-A-610D Class 3 & 39T0261; 2. Function test Pass.	TBD
4	Cold Start Test	1.Power Off 2.Temperature=[illegible] 3.Test period=[illegible] Hours 4.Power on 3 times	2	1. Visual Inspection – Compliance with IPC-A-610D Class 3 & 39T0261; 2. Function test Pass.	TBD
5	Temperature-Humidity Bias (THB)	1. Power On (apply core voltage to PCBA) 2. Temp.= 85 & Humi.= 85%R.H 3. Test period= 400 Hours	2	Pls refer to ATC	TBD
6	Accelerated Thermal Cycles (ATC)	ATC: 1.Power off 2.Ta=85 for 7.5mins 3.Ta=85 to [illegible] for 7.5mins 4.Ta=-40 for 7.5mins 5.Ta=-40 to 85 for 7.5mins 6.Repeat 630cycles Cross Section(both Bright & Dark): BGA/CONNECTOR/PTH Hole/ Via Hole (SMT/PIH)	2	1. Visual Inspection – Compliance with IPC-A-610D Class 3 & 39T0261; 2. Function test Pass; 3. Cross section (AFTER 630 cycles) - No separation - Allowable Crack Length: Max. 25% of pad diameter	TBD
7	Sine Vibration(Unpackaged)	1. Frequency = 5 ~ 500 ~ 5 HZ; 2. Acceleration = 2 G; 3. Sweep time: 3mins/cycle; 4. Each of x, y, z axis/ 30 min; 5. Power on and continuously ping AP/SG./Golden(AP for WLAN, SG for WWAN, Golden for BT) 6. Product need to be connected with the mating connector which used in laptop.	2	1. Visual Inspection – Compliance with IPC-A-610D Class 3 & 39T0261; 2. Function test Pass; 3. No disconnect between device & AP/SG /Golden during the test .	TBD
8	Shock Test(Unpackaged)	1. Half-Sine wave ,50G , 11msec 2. Test +/- x, y, z axes 3. Three shock per axes, total 18 shocks. 4. Product need to be connected with the mating connector which used in laptop. 5. Detect by an electrical discontinuity monitor.	2	1. Visual Inspection – Compliance with IPC-A-610D Class 3 & 39T0261; 2. No electrical discontinuity is greater than 1 microsecond.	TBD
9	Sine Vibration(Packaged)	1. Frequency = 5 ~ 500 ~ 5 HZ; 2. Acceleration = 2 Grms; 3. Each of x, y, z axis/ 30 mins.	1 Carton	1. Visual Inspection – Compliance with IPC-A-610D Class 3 & 39T0261; 2. Function test Pass.	TBD
10	Shock Test(Packaged)	1. Sine wave ,230G , 3msec ; 2. Test +/- x, y, z axes	1 Carton	1. Visual Inspection – Compliance with IPC-A-610D Class 3 & 39T0261; 2. Function test Pass.	TBD
11	Tin Wisker	1. Power off 60/95%RH for 2000hrs; 2. Room Temperature 2000hrs.	10	Whisker Length <50um	TBD

10. Notice

Operating Temperature Conditions

The product shall be capable of continuous reliable operation when operating in ambient temperature of 0°C to 70°C.

Non-Operating Temperature Conditions

Neither subassembly shall be damaged nor shall the operational performance be degraded when restored to the operating temperature when exposed to storage temperature in the range of -20°C to +85°C.

Operating Humidity Conditions

The product shall be capable of continuous reliable operation when subjected to relative humidity in the range of 0% and 85% non-condensing.

Handling Environment

Please make sure to avoid mechanical shock and vibration for this module.
Please do not drop the module.
Please do not clean the module.

Federal Communication Commission Interference Statement

This device complies with Part 15 of the FCC Rules. Operation is subject to the following two conditions: (1) This device may not cause harmful interference, and (2) this device must accept any interference received, including interference that may cause undesired operation.

This equipment has been tested and found to comply with the limits for a Class B digital device, pursuant to Part 15 of the FCC Rules. These limits are designed to provide reasonable protection against harmful interference in a residential installation. This equipment generates, uses and can radiate radio frequency energy and, if not installed and used in accordance with the instructions, may cause harmful interference to radio communications. However, there is no guarantee that interference will not occur in a particular installation. If this equipment does cause harmful interference to radio or television reception, which can be determined by turning the equipment off and on, the user is encouraged to try to correct the interference by one of the following measures:

- Reorient or relocate the receiving antenna.
- Increase the separation between the equipment and receiver.
- Connect the equipment into an outlet on a circuit different from that to which the receiver is connected.
- Consult the dealer or an experienced radio/TV technician for help.

FCC Caution: Any changes or modifications not expressly approved by the party responsible for compliance could void the user's authority to operate this equipment.

This transmitter must not be co-located or operating in conjunction with any other antenna or transmitter.

Radiation Exposure Statement:

This equipment complies with FCC radiation exposure limits set forth for an uncontrolled environment. This equipment should be installed and operated with a minimum distance of 20cm between the radiator & your body.

Radiation Exposure Statement:

The product complies with the FCC portable RF exposure limit set forth for an uncontrolled environment and is safe for intended operation as described in this manual. Further RF exposure reduction can be achieved if the product can be kept as far as possible from the user body or set the device to lower output power if such a function is available.

This device is intended only for OEM integrators under the following conditions:

The antenna must be installed such that 20 cm is maintained between the antenna and users, and

The transmitter module may not be co-located with any other transmitter or antenna.

As long as **2** conditions above are met, further transmitter test will not be required. However, the OEM integrator is still responsible for testing their end-product for any additional compliance requirements required with this moduleinstalled

IMPORTANT NOTE: In the event that these conditions can not be met (for example certain laptop configurations or co-location with another transmitter), then the FCC authorization is no longer considered valid and the FCC ID can not be used on the final product. In these circumstances, the OEM integrator will be responsible for re-evaluating the end product (including the transmitter) and obtaining a separate FCC authorization.

End Product Labeling

This transmitter module is authorized only for use in device where the antenna may be installed such that 20 cm may be maintained between the antenna and users. The final end product must be labeled in a visible area with the following: "Contains FCC ID:MCLT77H747". The grantee's FCC ID can be used only when all FCC compliance requirements are met.

Manual Information To the End User

The OEM integrator has to be aware not to provide information to the end user regarding how to install or remove this RF module in the user's manual of the end product which integrates this module.

The end user manual shall include all required regulatory information/warning as show in this manual.

Industry Canada statement:

This device complies with ISED's licence-exempt RSSs. Operation is subject to the following two conditions: (1) This device may not cause harmful interference, and (2) this device must accept any interference received, including interference that may cause undesired operation.

Le présent appareil est conforme aux CNR d' ISED applicables aux appareils radio exempts de licence. L'exploitation est autorisée aux deux conditions suivantes : (1) le dispositif ne doit pas produire de brouillage préjudiciable, et (2) ce dispositif doit accepter tout brouillage reçu, y compris un brouillage susceptible de provoquer un fonctionnement indésirable.

Radiation Exposure Statement:

This equipment complies with ISED radiation exposure limits set forth for an uncontrolled environment. This equipment should be installed and operated with minimum distance 20cm between the radiator & your body.

Radiation Exposure Statement

The product complies with the Canada portable RF exposure limit set forth for an uncontrolled

environment and is safe for intended operation as described in this manual. Further RF exposure reduction can be achieved if the product can be kept as far as possible from the user's body or by setting the device to lower output power if such a function is available.

Cet équipement est conforme aux limites d'exposition aux rayonnements ISED établies pour un environnement non contrôlé. Cet équipement doit être installé et utilisé avec un minimum de 20 cm de distance entre la source de rayonnement et votre corps.

This device is intended only for OEM integrators under the following conditions: (For module device use)

1) The antenna must be installed such that 20 cm is maintained between the antenna and users, and

2) The transmitter module may not be co-located with any other transmitter or antenna.

As long as **2** conditions above are met, further transmitter test will not be required. However, the OEM integrator is still responsible for testing their end-product for any additional compliance requirements required with this module installed.

Cet appareil est conçu uniquement pour les intégrateurs OEM dans les conditions suivantes: (Pour utilisation de dispositif module)

1) L'antenne doit être installée de telle sorte qu'une distance de 20 cm est respectée entre l'antenne et les utilisateurs, et 2) Le module émetteur peut ne pas être coïmplanté avec un autre émetteur ou antenne.

Tant que les **2** conditions ci-dessus sont remplies, des essais supplémentaires sur l'émetteur ne seront pas nécessaires. Toutefois, l'intégrateur OEM est toujours responsable des essais sur son produit final pour toutes exigences de conformité supplémentaires requis pour ce module installé.

IMPORTANT NOTE:

In the event that these conditions can not be met (for example certain laptop configurations or co-location with another transmitter), then the Canada authorization is no longer considered valid and the IC ID can not be used on the final product. In these circumstances, the OEM integrator will be responsible for re-evaluating the end product (including the transmitter) and obtaining a separate Canada authorization.

NOTE IMPORTANTE:

Dans le cas où ces conditions ne peuvent être satisfaites (par exemple pour certaines configurations d'ordinateur portable ou de certaines co-localisation avec un autre émetteur), l'autorisation du Canada n'est plus considéré comme valide et l'ID IC ne peut pas être utilisé sur le produit final. Dans ces circonstances, l'intégrateur OEM sera chargé de réévaluer le produit final (y compris l'émetteur) et l'obtention d'une autorisation distincte au Canada.

End Product Labeling

This transmitter module is authorized only for use in device where the antenna may be installed such that 20 cm may be maintained between the antenna and users. The final end product must be labeled in a visible area with the following: “Contains IC: 2878D-T77H747”.

Plaque signalétique du produit final

Ce module émetteur est autorisé uniquement pour une utilisation dans un dispositif où l'antenne peut être installée de telle sorte qu'une distance de 20cm peut être maintenue entre l'antenne et les utilisateurs. Le produit final doit être étiqueté dans un endroit visible avec l'inscription suivante: "Contient des IC: 2878D-T77H747".

Manual Information To the End User

The OEM integrator has to be aware not to provide information to the end user regarding how to install or remove this RF module in the user’s manual of the end product which integrates this module.

The end user manual shall include all required regulatory information/warning as show in this manual.

Manuel d'information à l'utilisateur final

L'intégrateur OEM doit être conscient de ne pas fournir des informations à l'utilisateur final quant à la façon d'installer ou de supprimer ce module RF dans le manuel de l'utilisateur du produit final qui intègre ce module.

Le manuel de l'utilisateur final doit inclure toutes les informations réglementaires requises et avertissements comme indiqué dans ce manuel.

This radio transmitter (IC: 2878D-T77H747, Model: T77H747) has been approved by Industry Canada to operate with the antenna types listed below with the maximum permissible gain indicated. Antenna types not included in this list, having a gain greater than the maximum gain indicated for that type, are strictly prohibited for use with this device.

Cet émetteur radio (IC: 2878D-T77H747, Modèle: T77H747) a été approuvé par Industrie Canada pour fonctionner avec les types d'antenne énumérés ci-dessous avec le gain maximal admissible indiqué. types d'antennes non inclus dans cette liste, ayant un gain supérieur au gain maximum indiqué pour ce type, sont strictement interdits pour une utilisation avec cet appareil.

DETACHABLE ANTENNA USAGE

This radio transmitter (IC: 2878DT77H747 / Model: T77H747) has been approved by ISED to operate with the antenna type listed below with maximum permissible gain indicated. Antenna types not included in this list, having a gain greater than the maximum gain indicated for that type, are strictly prohibited for use with this device.

Le présent émetteur radio (IC: 2878DT77H747 / Model: T77H747) a été approuvé par ISED pour fonctionner avec les types d'antenne énumérés ci-dessous et ayant un gain admissible maximal. Les types d'antenne non inclus dans cette liste, et dont le gain est supérieur au gain maximal indiqué, sont strictement interdits pour l'exploitation de l'émetteur.

Antenna NO.	Brand	Model	Antenna Gain(dBi)	Frequency range	Antenna Type	Connector Type
1	SAA	LX8416-12-000-C	NA	13.56MHz	PCB	ACH connector (with 1.2mm pitch)
2	Dexerials	ANT-M041A	NA	13.56MHz	PCB	ACH connector (with 1.2mm pitch)
3	Dexerials	ANT-M043A	NA	13.56MHz	PCB	ACH connector (with 1.2mm pitch)
4	Dexerials	ANT-M047A	NA	13.56MHz	PCB	ACH connector (with 1.2mm pitch)

5	SAA	LX7828-12-000-C	**NA**	**13.56MHz**	**PCB**	**ACH connector (with 1.2mm pitch)**
6	Lenovo Japan	FLANBPA-0715	**NA**	**13.56MHz**	**PCB**	**ACH connector (with 1.2mm pitch)**
7	**Huizhou Speed Wireless Technology Co., Ltd**	**F-0W-JV-0191-001-K0**	**NA**	**13.56MHz**	**PCB**	**ACH connector (with 1.2mm pitch)**

低功率電波輻射性電機管理辦法

第十二條 經型式認證合格之低功率射頻電機，非經許可，公司、商號或使用者均不得擅自變更 頻率、加大功率或變更原設計之特性及功能。

第十四條 低功率射頻電機之使用不得影響飛航安全及干擾合法通信；經發現有干擾現象時，應 立即停用，並改善至無干擾時方得繼續使用。 前項合法通信，指依電信法規定作業之無線電通信。

低功率射頻電機須忍受合法通信或工業、科學及醫療用電波輻射性電機設備之干擾。

模組認證：

1. 本模組於取得認證後將依規定於模組本體標示審驗合格標籤。
2. 系統廠商應於平台上標示「本產品內含射頻模組： XXXyyyLPDzzzz-x」字樣。

「電磁波曝露量 MPE 標準值 1mW/cm^2，送測產品實測值為 0.97 mW/cm^2」