ConnectCore 6 Plus

Hardware Reference Manual

Revision history—90002278

Revision	Date	Description
G	August 2020	Revised MCA pinout comments, added MCA functionality note.
H	October 2021	Added safety instructions and UKCA labeling requirements.
J	December 2021	Listed new Bluetooth IDs.
K	January 2022	Add Japan certifications.
L	July 2022	Add additional FCC-approved antennas.

Trademarks and copyright

Digi, Digi International, and the Digi logo are trademarks or registered trademarks in the United States and other countries worldwide. All other trademarks mentioned in this document are the property of their respective owners.

© 2022 Digi International Inc. All rights reserved.

Disclaimers

Information in this document is subject to change without notice and does not represent a commitment on the part of Digi International. Digi provides this document “as is,” without warranty of any kind, expressed or implied, including, but not limited to, the implied warranties of fitness or merchantability for a particular purpose. Digi may make improvements and/or changes in this manual or in the product(s) and/or the program(s) described in this manual at any time.

Warranty

To view product warranty information, go to the following website:

www.digi.com/howtobuy/terms

Customer support

Gather support information: Before contacting Digi technical support for help, gather the following information:

- Product name and model
- Product serial number (s)
- Firmware version
- Operating system/browser (if applicable)
- Logs (from time of reported issue)
- Trace (if possible)
- Description of issue
- Steps to reproduce

Contact Digi technical support: Digi offers multiple technical support plans and service packages. Contact us at +1 952.912.3444 or visit us at www.digi.com/support.

Feedback

To provide feedback on this document, email your comments to

techcomm@digi.com

Include the document title and part number (ConnectCore 6 Plus Hardware Reference Manual, 90002278 L) in the subject line of your email.

Contents

About the ConnectCore 6 Plus

Features and functionality 7
Safety instructions 8
Block diagram 9
Power supply architecture 9
Bootstrap 13
Wireless interfaces 15
- WLAN IEEE 802.11a/b/g/n/ac 16
- Modulation and data rates 16
- RF channels 18
- Receive sensitivity 20
- Transmit power 20
- Bluetooth 21

MCA hardware 21
- Supported devices 21
- MCA pinout 23
- Shared I2C bus 31
- Shared SPI bus 32

CryptoAuthentication device 33
Module pinout 34
- Pinout differences between ConnectCore 6 and ConnectCore 6 Plus 82

Signal use limitations 83

Specifications for the ConnectCore 6 Plus

Electrical characteristics 86
- Voltage supplies 86

Power consumption 86
- Power consumption use cases 86
- Global power consumption 87

Environmental specifications 87
- Linux - Android users 88

Assembly instructions

Moisture sensitivity and shelf life 90
Mounting 90
Coplanarity 90
Solder paste print 90
Stencil 90

SMT pick and place 91
SMT process parameter reference 91
Reflow profile 91

Regulatory information and certifications

United States FCC 94
Labeling requirements 94
Maximum power and frequency specifications (FCC) 95
FCC notices 96
FCC-approved antennas 96
RF exposure 97
Canada (ISED) 97
Maximum power and frequency specifications 97
Labeling requirements 98
Transmitters with detachable antennas 98
Europe ETSI and UKCA 98
Maximum power and frequency specifications (Europe ETSI) 99
CE and UKCA OEM labeling requirements 101
Declarations of Conformity 102
Approved antennas 102
Bluetooth SIG-qualified hardware and firmware 102
Japan 103
Approval Label (MIC Marking) 104

About the ConnectCore 6 Plus

The ConnectCore 6 Plus is an integrated platform solution with processor speed up to 1.2 GHz and pre-certified dual-band Wi-Fi (802.11a/b/g/n/ac) with Bluetooth 5.0 dual mode connectivity.

Cloud Connector integration, as part of the Digi Linux and Android software platform support, offers secure remote management and web services capabilities through Digi Remote Manager. Digi also offers custom Remote Manager hardware and wireless design services as well as end-to-end solutions for cloud integration and app development.

Features and functionality 7
Safety instructions 8
Block diagram 9
Power supply architecture 9
Bootstrap 13
Wireless interfaces 15
MCA hardware 21
CryptoAuthentication device 33
Module pinout 34
Signal use limitations 83

Note To serve our customers most effectively, Digi International Inc. is consolidating its cloud services, Digi Device Cloud and Digi Remote Manager®, under the Remote Manager name. This phased process does not affect device functionality or the functionality of the web services and other features. However, you will find instances of both Device Cloud and Digi Remote Manager in some documentation, firmware, and user interfaces.

Features and functionality

The ConnectCore 6 Plus module is based on the i.MX6QP processor from NXP. This processor offers a high number of interfaces. Most of these interfaces are multiplexed and are not available simultaneously. The module has the following features:

- i.MX6QP ARM Cortex-A9 cores operating at speed up to 1.0 GHz
  - 32 Kbytes L1 instruction cache
  - 32 Kbytes L1 data cache
  - Up to 1 MB unified instruction/data L2 cache
  - NEON MPE (Media Processing Engine) co-processor
- Graphical hardware accelerators:
  - IPU (Image Processing Unit)
  - VPU (Video Processing Unit)
  - 3D GPU (Graphics Processing Unit) version 6
  - 2D GPU (Graphics Processing Unit) version 3
  - GPU (OpenVG 1.1 Graphics Processing Unit)
  - Prefetch and resolve engine
  - Prefetch and resolve gasket
  - ASRC (Asynchronous Sample Rate Converter)
- 64-bit DDR3-1066 memory interface with a density up to 2 GBytes
- 8-bit eMMC support
- Dialog DA9063 power management IC (PMIC)
  - 6x DC/DC buck converters
  - 11x LDO regulators
  - RTC with rechargeable coin cell battery support
  - 10-bit ADC channels
  - GPIO pins
- IEEE 802.11 a/b/g/n/ac WLAN interface
- Bluetooth version 4.2 dual mode
- Cortex-M0+/Cortex-M4 MCA (Microcontroller Assist) subsystem
- Debug interfaces:
  - Standard JTAG controller IEEE 1149.1
  - ETM/ETB support

- Support of i.MX6QP typical interfaces:
  - 16/32-bit data/address bus
  - SATA II, 3.0 Gbps (24-bit parallel bus, LVDS, HDMI, MIPI/DSI)
  - Display support
    - HDMI
    - 24-bit parallel bus
    - Dual LVDS
    - MIPI/DSI
  - 2x camera (20-bit parallel bus, MIPI/CSI)
  - MMC/SD/SDIO
  - 1x USB OTG with integrated PHY
  - 3x USB Host
  - PCI Express Gen 2.0 lane
  - 10/100/1000 M Ethernet MAC
  - UART, SPI, I2C, PWM, CAN, I2S and GPIO
- Ultra-miniature SMT module (50x50mmx5mm) based on 400-LGA pads
- Security accelerators:
  - ARM TrustZone
  - CAAM (Cryptographic Acceleration and Assurance Module)
  - SNVS (Secure Non-volatile Storage)
  - CSU (Central Security Unit)
  - A-HABv4 (Advanced High-assurance Boot)

Safety instructions

- The ConnectCore 6 Plus module cannot be guaranteed operation due to the radio link and so should not be used for interlocks in safety critical devices such as machines or automotive applications.
- The ConnectCore 6 Plus module has not been approved for use in (this list is not exhaustive):
  - nuclear applications
  - explosive or flammable atmospheres
- There are no user serviceable components inside the ConnectCore 6 Plus module. Do not remove the shield or modify the ConnectCore 6 Plus in any way. Modifications may exclude the module from any warranty and can cause the ConnectCore 6 Plus to operate outside of regulatory compliance for a given country, leading to the possible illegal operation of the radio.
- Use industry standard ESD protection when handling the ConnectCore 6 Plus module.
- Take care while handling to avoid electrical damage to the PCB and components.
- Do not expose ConnectCore 6 Plus modules to water or moisture.
- Use this product with the antennas specified in the ConnectCore 6 Plus module user guides.

- The end user must be told how to remove power from the ConnectCore 6 Plus module or to locate the antennas 20 cm from humans or animals.

Block diagram

The figure below shows the block diagram of the NXP i.MX6QP application processor.

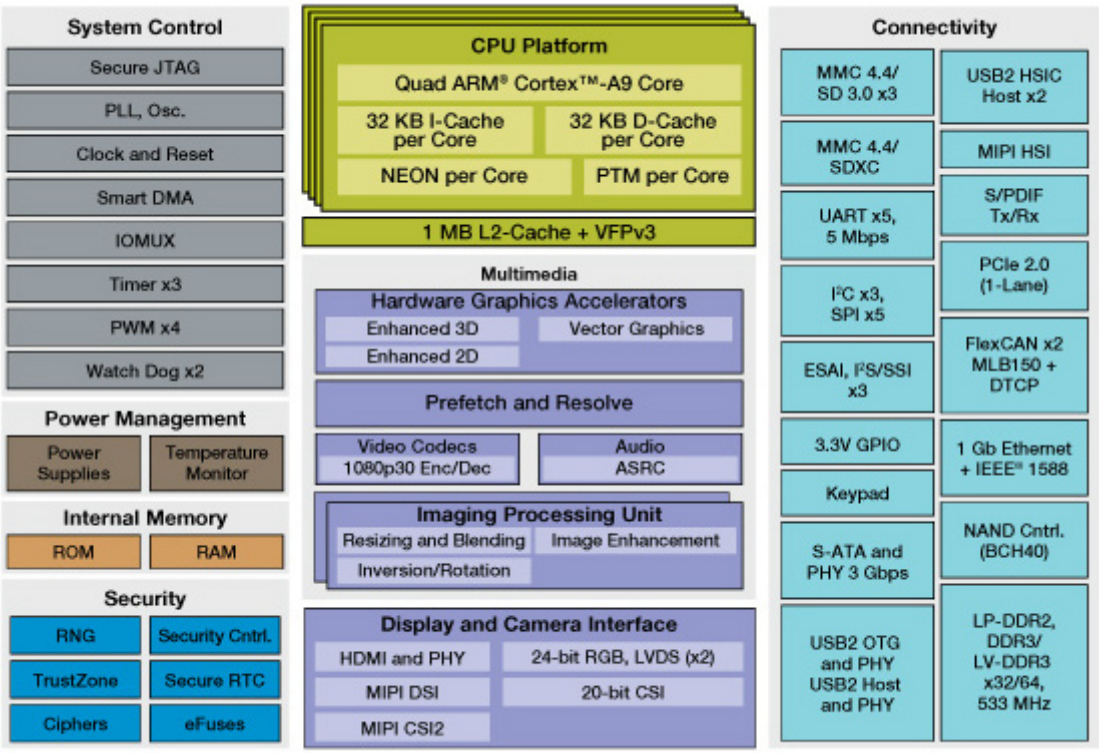

Power supply architecture

The ConnectCore 6 Plus provides a primary 5 V power supply input. This supply is the main power domain to the on-module Dialog DA9063 power management IC (PMIC), which generates all required supply voltages for the module components as well as the carrier board.

The module provides support for a backup battery (coin-cell or super cap) powering the real-time clock (RTC) on the module. In addition, rechargeable backup batteries (ML414, others) are also supported.

The PMIC generates the following power domains that are available on the module pads:

- One PMIC switching regulator:
  - VGEN_3V3
- Five PMIC LDO:
  - VLDO2
  - VLDO3_MCA

- VLDO4
- VLDO6
- VLDO8
- VDD_SD2
- VDD_WLAN_SD1

Signal name	PMIC regulator	Output voltage	Output accuracy	Maximum current	Dropout voltage (MAX)	Turn on time (MAX)	Turn off time (MAX)	Quiescent current in OFF mode (TYP)
VGEN_3V3	BUCKPERI	3.3 V	+/-3%	1500 mA	-	1 µA	1.2 ms	-

Note The maximum current consumption mentioned in the previous table is a combination of the current consumed by the module (max 500 mA) and by the carrier board for external use (1000 mA).

The table below provides the characteristics of the optional LDO outputs:

Signal name	PMIC regulator	Output voltage	Output accuracy	Default voltage	Maximum current	Drop output voltage (MAX)	Quiescent current in OFF mode (TYP)
VLDO2	LDO2	0.6-1.86 V	+/-3%	1.8 V	200 mA	150 mV	1 µA
VLDO3_MCA	LDO3	0.9-3.44 V	+/-3%	3.3 V	200 mA	150 mV	1 µA
VLDO4	LDO4	0.9-3.44 V	+/-3%	3.3 V	200 mA	150 mV	1 µA
VLDO6	LDO6	0.9-3.6 V	+/-3%	3.3 V	200 mA	150 mV	1 µA
VLDO8	LDO8	0.9-3.6 V	+/-3%	3.3 V	200 mA	150 mV	1 µA
VDD_SD2	LDO9	0.95 - 3.6 V	+/-1%	3.3 V	200 mA	150 mV	1 µA
VDD_WLAN_SD1	LDO10	0.9 - 3.6 V	+/-3%	3.3 V	300 mA	150 mV	1 µA

Signal name	Turn on time (MAX)	Turn off time (MAX)
VLDO2	150 µs	1 ms
VLDO3_MCA	300 µs	1 ms
VLDO4	300 µs	1 ms
VLDO6	200 µs	1 ms

Signal name	Turn on time (MAX)	Turn off time (MAX)
VLDO8	300 µs	1 ms
VDD_SD2	200 µs	1 ms
VDD_WLAN_SD1	200 µs	1 ms

Note For information about using the LDO options, contact Digi. VLDO3 is used for supplying MCA processor on the module.

The power management IC located on the module is responsible for generating all required i.MX6QP processor supply voltages. The following i.MX6QP supplies are available on the module pads:

- NVCC_ENET
- NVCC_EIM
- NVCC_LCD
- NVCC_CSI
- NVCC_RGMII

Some of the I/O supplies are set on the module. See the following table:

Power domain	Connection
NVCC_GPIO	VGEN_3V3
NVCC_JTAG	VGEN_3V3
NVCC_NANDF	VGEN_3V3
NVCC_SD1	VDD_WLAN_SD1
NVCC_SD2	VDD_SD2
NVCC_SD3	VGEN_3V3
PCIE_VPH	2.5V (VDDHIGH_CAP_2V5)

The remaining I/O voltages must be set externally and are left open on the ConnectCore 6 Plus module. See the following table for operating ranges of the remaining I/O supplies.

Power domain	Min	Typical	Max
NVCC_ENET	1.8 V	2.5 V	3.3 V
NVCC_EIM	1.8 V	2.5 V	3.3 V
NVCC_LCD	1.8 V	2.5 V	3.3 V
NVCC_CSI	1.8 V	2.5 V	3.3 V
NVCC_MIPI	2.25 V	2.5 V	3.3 V

Power domain	Min	Typical	Max
NVCC_RGMII in HSIC 1.2 V mode	1.15 V	-	1.30 V
NVCC_RGMII in RGMII 1.5 V mode	1.43 V	-	1.58 V
NVCC_RGMII in RGMII 1.8 V mode	1.70 V	-	1.90 V
NVCC_RGMII in RGMII 2.5 V mode	2.25 V	-	2.625 V

As shown in the table above, the supplies have a wide operating range. To provide the most cost-effective and flexible solution for a given use case, the carrier board integrating the ConnectCore 6 Plus module must provide the supplies listed in the table. But note that PMIC power domains 3.3 V—and LDO2/3/4/6/8 options—are dedicated power sources for supplying i.MX6QP power domains.

The MCU-assist-specific power domain (VLDO3_MCA) available on the ConnectCore 6 Plus LGA pads is a power supply output that powers the on-module Kinetis processor.

The following diagram outlines the ConnectCore 6 Plus power supply.

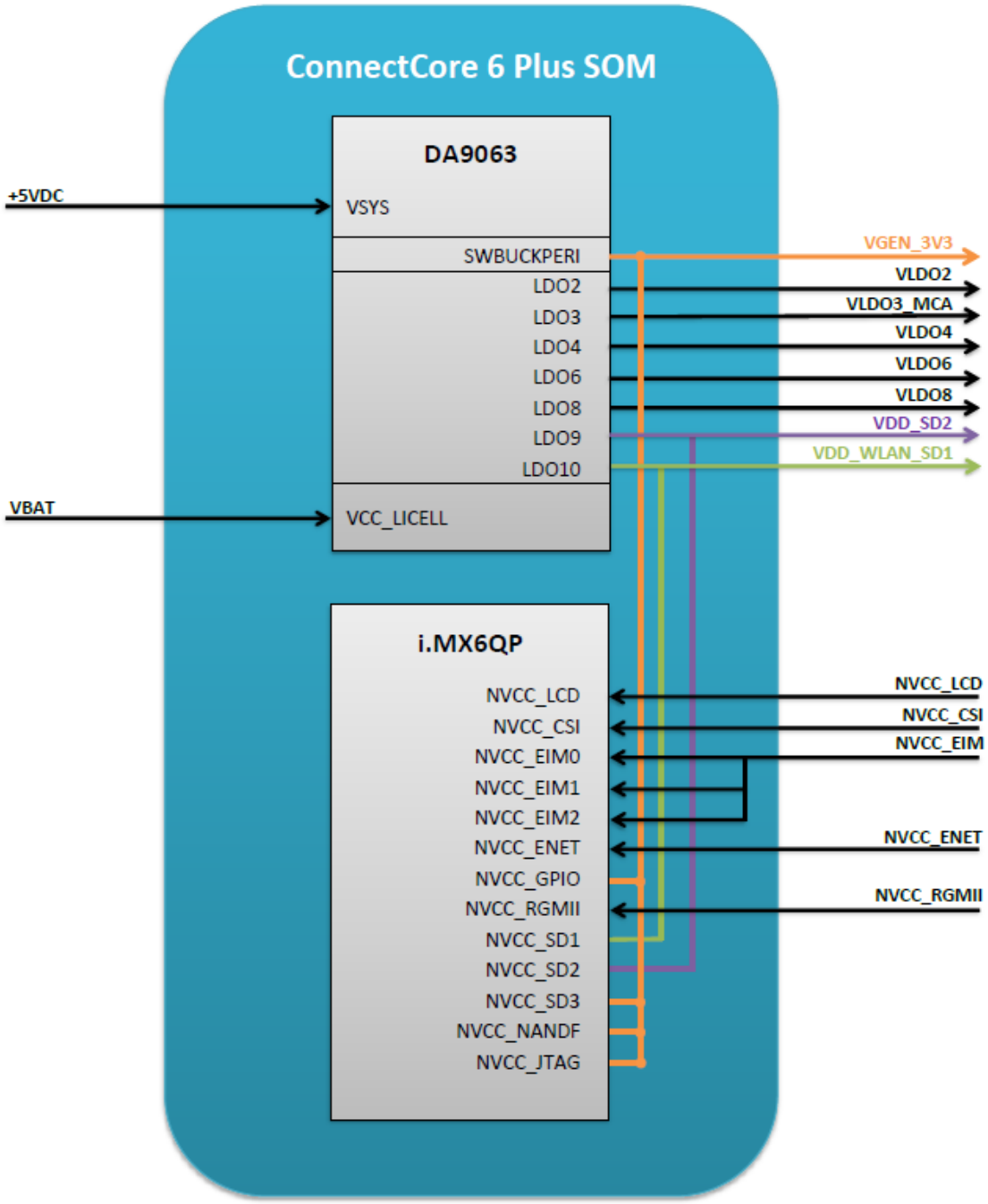

Bootstrap

The ConnectCore 6 Plus module can be configured to boot from different devices and interfaces determined by the boot ROM. The configuration of the CPU booting process is done through:

- BOOT_MODE register, which selects the boot mode of the processor
- eFUSEs and/or GPIOs, which determine the boot configuration

Four boot modes are available on the i.MX6QP processor. Selection between them is done through BOOT_MODE[1:0] bits. The bits are externally configurable on two processor IOs, whose values are latched during boot-up:

BOOT_MODE [1:0]	Boot type
00	Boot from fuses
01	Serial downloader
10	Internal boot (default)
11	Reserved

BOOT_MODE[0] and BOOT_MODE[1] are available on dedicated pads on the module.

Note BOOT_MODE[1:0] is set internally to [10] through 10K pull-up and 10K pull-down resistors. So, by default, the SOM is configured to internal boot.

Boot from fuses

Boot from fuses is the recommended boot mode for production purposes. When this boot mode is selected, you must configure several parameters in order to select and configure the system boot device. These parameters are configured through fuses, which are burned in order to set their values.

CAUTION! A boot-from-fuses configuration is irreversible.

BOOT_CFG1 register selects the boot device through BOOT_CFG1[7:4] bits:

BOOT_CFG1[7:4]	Boot device
0000	NOR/OneNAND (EIM)
0001	Reserved
1xxx	Raw NAND
0010	SSD/Hard Disk (SATA)
010x	SD/eSD/SDXC
0011	Serial ROM (I2C/SPI)
011x	MMC/eMMC

There are many other registers that configure the different boot devices. For a complete description of the booting configuration, refer to the *NXP i.MX6QP Applications Processor Reference Manual (Chapter 8: System Boot*).

Internal Boot

Internal boot is the recommended boot mode for development purposes. When this boot mode is selected, the selection and configuration of the booting process is done through the same registers used when booting from fuses. However, this time the values of some registers are overridden using multiple GPIOs—which are latched during power-up.

The following configuration is done internally in the ConnectCore 6 Plus module to enable booting from the internal eMMC memory:

Bootstrap register bit	Corresponding GPIO	Default configuration
BOOT_CFG1[4]	EIM_DA4	10K pull-down
BOOT_CFG1[5]	EIM_DA5	10K pull-up
BOOT_CFG1[6]	EIM_DA6	10K pull-up
BOOT_CFG1[7]	EIM_DA7	10K pull-down
BOOT_CFG2[3]	EIM_DA11	10K pull-up
BOOT_CFG2[4]	EIM_DA12	10K pull-up
BOOT_CFG2[5]	EIM_DA13	10K pull-down
BOOT_CFG2[6]	EIM_DA14	10K pull-up

By default, the system is configured to boot from MMC/eMMC (BOOT_CFG1[7:5] = 011). You can externally change the configuration of these lines to select between different boot devices. To see a detailed implementation of the boot configuration, check the ConnectCore 6 Plus carrier board reference design.

Make sure that the following signals are not pulled high during boot:

- EIM_EB3 (pad AA18)
- EIM_A18 (pad AB15)
- EIM_A20 (pad AB16)
- EIM_A21 (pad AC16)

Pulling these lines up during booting will prevent the system from booting.

Wireless interfaces

The ConnectCore 6 Plus system-on-module combines a wireless local area network (WLAN) and Bluetooth dual solution to support IEEE802.11 a/b/g/n/ac WLAN standards and Bluetooth 5.0, enabling integration of WLAN/Bluetooth and Low Energy technology.

The following sections include specifications for the wireless interfaces available on the i.MX6QP module.

WLAN IEEE 802.11a/b/g/n/ac

The 2.4 GHz band on the ConnectCore 6 Plus module supports 20/40 MHz bandwidths, and the 5 GHz band supports 20/40/80 MHz bandwidths.

The following sections specify the performance of the WLAN IEEE 802.11a/b/g/n/ac interface on the ConnectCore 6 Plus module.

Modulation and data rates

The following tables list modulation values for ConnectCore 6 Plus module supports the following WLAN standards.

Mode	Modulation & coding	Rate
802.11b	DBPSK	1 Mbps
	DQPSK	2 Mbps
	CCK	5.5 Mbps
	CCK	11 Mbps
802.11ga	BPSK-1/2	6 Mbps
	BPSK-3/4	9 Mbps
	QPSK-1/2	12 Mbps
	QPSK-3/4	18 Mbps
	16QAM-1/2	24 Mbps
	16QAM-3/4	36 Mbps
	64QAM-2/3	48 Mbps
	64QAM-3/4	54 Mbps
802.11n	BPSK-1/2	MCS0
	QPSK-1/2	MCS1
	QPSK-3/4	MCS2
	16QAM-1/2	MCS3
	16QAM-3/4	MCS4
	64QAM-2/3	MCS5
	64QAM-3/4	MCS6
	64QAM-5/6	MCS7

Mode	Modulation & coding	Rate
802.11ac	BPSK-1/2	MCS0
	QPSK-1/2	MCS1
	QPSK-3/4	MCS2
	16QAM-1/2	MCS3
	16QAM-3/4	MCS4
	64QAM-2/3	MCS5
	64QAM-3/4	MCS6
	64QAM-5/6	MCS7
	256QAM-3/4	MCS8
	256QAM-5/6	MCS9

Data rate (Mbps) - Non Short Guard Interval (Non-SGI)

Data rate (Mbps)		802.11b		802.11ga		802.11n		802.11ac		
Modulation		**DBPSK**	**CCK**	**BPSK-1/2**	**64QAM-3/4**	**BPSK-1/2**	**64QAM-5/6**	**BPSK-1/2**	**64QAM-5/6**	**256QAM-5/6**
		1 Mbps	**11 Mbps**	**6 Mbps**	**54 Mbps**	**MCS0**	**MCS7**	**MCS0**	**MCS7**	**MCS9**
2.4 GHz	HT20	1	11	6	54	6.5	65	6.5	65	
	HT40					13.5	135	13.5	135	180
5 GHz	HT20			6	54	6.5	65	6.5	65	
	HT40					13.5	135	13.5	135	180
	HT80							29.3	292.5	390

Data rate (Mbps) - Short Guard Interval (SGI)

Mode		802.11b		802.11ga		802.11n		802.11ac		
Modulation		**DBPSK**	**CCK**	**BPSK-1/2**	**64QAM-3/4**	**BPSK-1/2**	**64QAM-5/6**	**BPSK-1/2**	**64QAM-5/6**	**256QAM-5/6**
		1 Mbps	**11 Mbps**	**6 Mbps**	**54 Mbps**	**MCS0**	**MCS7**	**MCS0**	**MCS7**	**MCS9**
2.4 GHz	HT20	1	11	6	54	7.2	72.2	7.2	72.2	
	HT40					15	150	15	150	200

Mode		802.11b		802.11ga		802.11n		802.11ac		
5 GHz	HT20			6	54	7.2	72.2	7.2	72.2	
	HT40					15	150	15	150	200
	HT80							32.5	325	433.3

RF channels

The ConnectCore 6 Plus module supports the following frequency bands.

RF band	Ch. BW	Ch. spacing	Channel number (Center freq. MHz)
2.4 GHz	20 MHz	5 MHz	1(2412), 2(2417), 3(2422), 4(2427), 5 (2432), 6(2437), 7(2442), 8(2447), 9 (2452), 10(2457), 11(2462), 12(2467), 13(2472), 14(2484)
	40 MHz	5 MHz	3(2422), 11(2462)
5 GHz	20 MHz	20 MHz	36(5180), 40(5200), 44(5220), 48 (5240), 52(5260), 56(5280), 60(5300), 64(5320), 100(5500), 104(5520), 108 (5540), 112(5560), 116(5580), 120 (5600), 124(5620), 128(5640), 132 (5660), 136(5680), 140(5700), 144 (5720), 149(5745), 153(5765), 157 (5785), 161(5805), 165(5825)
	40 MHz	40 MHz	38(5190), 46(5230), 54(5270), 62 (5310), 102(5510), 110(5550), 118 (5590), 126(5630), 134(5670), 142 (5710), 151(5755), 159(5795)
	80 MHz	80 MHz	42(5210), 58(5290), 106(5530), 122 (5610), 138(5690), 155(5775)

Note See Regulatory information and certifications for further details about available RF channels and their maximum transmit power.

2.4 GHz

2.4 GHz band channel #	Center frequency (MHz)	Europe (ETSI)	North America (FCC)	Japan
1	2412	✓	✓	✓
2	2417	✓	✓	✓
3	2422	✓	✓	✓

2.4 GHz band channel #	Center frequency (MHz)	Europe (ETSI)	North America (FCC)	Japan
4	2427	✓	✓	✓
5	2432	✓	✓	✓
6	2437	✓	✓	✓
7	2442	✓	✓	✓
8	2447	✓	✓	✓
9	2452	✓	✓	✓
10	2457	✓	✓	✓
11	2462	✓	✓	✓
12	2467	✓	No	✓
13	2472	✓	No	✓
14	2484	No	No	802.11b only

5 GHz

5 GHz band channel #	Center frequency (MHz)	EUROPE (ETSI)	NORTH AMERICA (FCC)	JAPAN
36	5180	Indoors	✓	✓
40	5200	Indoors	✓	✓
44	5220	Indoors	✓	✓
48	5240	Indoors	✓	✓
52	5260	Indoors / DFS / TPC	DFS	DFS / TPC
56	5280	Indoors / DFS / TPC	DFS	DFS / TPC
60	5300	Indoors / DFS / TPC	DFS	DFS / TPC
64	5320	Indoors / DFS / TPC	DFS	DFS / TPC
100	5500	DFS / TPC	DFS	DFS / TPC
104	5520	DFS / TPC	DFS	DFS / TPC
108	5540	DFS / TPC	DFS	DFS / TPC
112	5560	DFS / TPC	DFS	DFS / TPC
116	5580	DFS / TPC	DFS	DFS / TPC
120	5600	DFS / TPC	No access	DFS / TPC
124	5620	DFS / TPC	No access	DFS / TPC

5 GHz band channel #	Center frequency (MHz)	EUROPE (ETSI)	NORTH AMERICA (FCC)	JAPAN
128	5640	DFS / TPC	No access	DFS / TPC
132	5660	DFS / TPC	DFS	DFS / TPC
136	5680	DFS / TPC	DFS	DFS / TPC
140	5700	DFS / TPC	DFS	DFS / TPC
149	5745	SRD	✓	No access
153	5765	SRD	✓	No access
157	5785	SRD	✓	No access
161	5805	SRD	✓	No access
165	5825	SRD	✓	No access

Note
DFS = Dynamic Frequency Selection
TPC = Transmit Power Control
SRD = Short Range Devices 25 mW max power

Receive sensitivity

The following table lists typical receive sensitivity values for the ConnectCore 6 Plus module.

Mode		802.11b		802.11ga		802.11n		802.11ac		
Modulation		DBPSK	CCK	BPSK-1/2	64QAM-3/4	BPSK-1/2	64QAM-5/6	BPSK-1/2	64QAM-5/6	256QAM-5/6
		1 Mbps	11 Mbps	6 Mbps	54 Mbps	MCS0	MCS7	MCS0	MCS7	MCS9
2.4 GHz	HT20	-90	-88	-90	-75	-82	-64	-82	-64	-
	HT40	-	-	-	-	-79	-61	-79	-61	-54
5 GHz	HT20	-	-	-90	-75	-82	-64	-82	-64	-
	HT40	-	-	-	-	-79	-61	-79	-61	-54
	HT80	-	-	-	-	-	-	-76	-58	-51

Note Specification is subject to change.

Transmit power

The following table lists nominal transmit power values for the ConnectCore 6 Plus module.

RF Band	Channel BW	Standard	Output power (dBm)
2.4 GHz	20 MHz	802.11b	18 (1 Mbps) - 18 (11 Mbps)
	20 MHz	802.11g	18 (6 Mbps) - 16 (54 Mbps)
	20 MHz	802.11n	18 (MCS0) - 15 (MCS7)
	40 MHz	802.11n	17 (MCS0) - 15 (MCS7)
	40 MHz	802.11ac	17 (MCS0) - 13 (MCS9)
5 GHz	20 MHz	802.11a	13 (6 Mbps) - 11 (54 Mbps)
	20 MHz	802.11n	13 (MCS0) - 10 (MCS7)
	40 MHz	802.11n	12 (MCS0) - 9 (MCS7)
	40 MHz	802.11ac	12 (MCS0) - 5 (MCS9)
	80 MHz	802.11ac	11 (MCS0) - 4 (MCS9)

Note See Regulatory information and certifications for further details about available RF channels and their maximum transmit power.

Note Due to manufacturing tolerance, these nominal output powers may be reduced up to 3 dB.

Bluetooth

The ConnectCore 6 Plus module supports both Bluetooth and Bluetooth Low Energy protocols:

- Bluetooth 5.0; backwards compatible with Bluetooth 1.X, 2.X + Enhanced Data Rate, Bluetooth 3.X, 4.0, 4.1, and 4.2 Bluetooth class 1 and class 2 power-level transmissions
- Integrated WLAN-Bluetooth coexistence

Note See Bluetooth SIG-qualified hardware and firmware for more information.

MCA hardware

Note Digi provides hardware connectivity between the on-module MCA and the main processor. Additional software development is required to implement MCA functionality.

Supported devices

The ConnectCore 6 Plus module is designed to support a Kinetis processor in a QFN48 package. See below for a list of compatible Kinetis processors that can be used in this package size:

- MKL14Z32VFT4
- MKL14Z64VFT4
- MKL15Z128VFT4
- MKL15Z32VFT4

- MKL15Z64VFT4
- MKL24Z32VFT4
- MKL24Z64VFT4
- MKL25Z128VFT4
- MKL25Z32VFT4
- MKL25Z64VFT4
- MKL26Z128VFT4
- MKL26Z64VFT4
- MKL26Z32VFT4
- K10P48M50SF0
- K20P48M50SF0

By default, NXP MKL14Z32VFT4 is populated on the module variants supporting the MCA unit.

MCA pinout

The table below contains the pinouts for the MCA unit on the ConnectCore 6 Plus module.

Note The pinout information assumes you are using the NXP MKL14Z32VFT4 microcontroller. Using a different Kinetis microcontroller may change the functions available on the MCA pins.

MCA		ConnectCore 6 Plus		
Pin Nr	Signal name	Pad Nr	Signal name	Usage on module
1	VDD	-	LDO3_MCA	MCA power supply 1x 100 nF + 1x1 µF capacitors connected to GND are placed close to this pin on the ConnectCore 6 Plus SOM.
2	VSS	-	GND	MCA ground
3	ADC0_SE1 PTE16 SPI0_PCS0 UART2_TX TPM_CLKIN0 - - -	N20	MCA_IO/USB0_P	For KL24, KL25 and K20 processors, this pin is USB0_DP. MCA_IO/USB0_P (N20) and MCA_IO/USB0_N (P20) have been routed as a differential pair for supporting USB functionality on KL24, KL25 and K20 processors.
4	ADC0_SE5a PTE17 SPI0_SCK UART2_RX TPM_CLKIN1 - LPTMR0_ALT3 -	P20	MCA_IO/USB0_N	For KL24, KL25 and K20 processors, this pin is USB0_DN. MCA_IO/USB0_P (N20) and MCA_IO/USB0_N (P20) have been routed as a differential pair for supporting USB functionality on KL24, KL25 and K20 processors.
5	ADC0_SE2 PTE18 SPI0_MOSI - I2C0_SDA SPI0_MISO - -	Y22	MCA_IO27	For KL24 and K20 processors, this pin is VOUT33. The ConnectCore 6 Plus SOM has a 0R resistor on this pin for connecting this signal to LDO3_MCA. By default, the resistor is not populated and MCA_IO27 is available on the module pad.
6	ADC0_SE6a PTE19 SPI0_MISO - I2C0_SCL SPI0_MOSI - -	P21	MCA_IO14	

MCA		ConnectCore 6 Plus		
Pin Nr	**Signal name**	**Pad Nr**	**Signal name**	**Usage on module**
7	ADC0_SE0 PTE20 - TPM1_CH0 UART0_TX - - -	T23	MCA_IO0	
8	ADC0_SE4a PTE21 - TPM1_CH1 UART0_RX - - -	P23	MCA_IO1	
9	VDDA	-	LDO3_MCA	MCA power supply. A 100 nF capacitor connected to GND is placed close to this pin on theConnectCore 6 Plus SOM.
10	VREFH	AC10	MCA_VREFH	A 100 nF capacitor connected to GND is placed close to this pin on theConnectCore 6 Plus SOM.
11	VREFL	-	GND	MCA ground
12	VSSA	-	GND	MCA ground
13	CMP0_ IN5/ADC0_ SE4b PTE29 - TPM0_CH2 TPM_CLKIN0 - - -	Y23	MCA_IO23	
14	ADC0_ SE23/CMP0_ IN4 PTE30 - TPM0_CH3 TPM_CLKIN1 - - -	-	-	This MCA pin is connected to the gate of an N-channel MOSFET. A 10 K pull-down resistor is connected to GND on this signal too. The drain of the MOSFET is connected to theConnectCore 6 Plus signal ON/OFF (pad D18). The source of the MOSFET is connected to GND. This signal is reserved on the module and allows MCA to control ON/OFF signal over software.
15	-	-	KINETIS_32K	This MCA pin is connected to 32K output of the

MCA		ConnectCore 6 Plus		
Pin Nr	**Signal name**	**Pad Nr**	**Signal name**	**Usage on module**
	PTE24 - TPM0_CH0 - I2C0_SCL - -			PMIC, which is the clock input of the MCA processor.
16	- PTE25 - TPM0_CH1 - I2C0_SDA - -	AC21	MCA_IO28	For K10 and K20 processors, this pin is VBAT. TheConnectCore 6 Plus SOM has a 0R resistor on this pin for connecting this signal to LDO3_MCA. By default, the resistor is not populated and MCA_IO28 is available on module pad. 1x 100 nF + 1x1 µF capacitors connected to GND are placed close to this pin on ConnectCore 6 Plus SOM.
17	- PTA0 - TPM0_CH5 - - - SWD_CLK	L23	MCA_SWD_CLK	
18	- PTA1 UART0_RX TPM2_CH0 - - - -	AA22	MCA_IO25	
19	- PTA2 UART0_TX TPM2_CH1 - - - -	AA23	MCA_IO6/PMIC_GP_FB2	Connected on ConnectCore 6 Plus SOM to PMIC signal GP_FB2.
20	- PTA3 I2C1_SCL TPM0_CH0 - - -	M23	MCA_SWD_DIO	

MCA		ConnectCore 6 Plus		
Pin Nr	**Signal name**	**Pad Nr**	**Signal name**	**Usage on module**
	SWD_DIO			
21	- PTA4 I2C1_SDA TPM0_CH1 - - - NMI_b	AA21	MCA_IO26	
22	VDD	-	LDO3_MCA	MCA power supply 1x 100 nF + 1x1 µF capacitors connected to GND are placed close to this pin on ConnectCore 6 Plus SOM.
23	VSS	-	GND	MCA ground
24	EXTAL0 PTA18 - UART1_RX TPM_CLKIN0 - - -	-	PMIC_STBY_REQ	Connected on ConnectCore 6 Plus SOM to i.MX6QP processor signal PMIC_STBY_REQ (ball F11) and PMIC signal SYS_EN/GPIO8 (ball B9).
25	XTAL0 PTA19 - UART1_TX TPM_CLKIN1 - LPTMR0_ALT1 -	T20	MCA_IO24	
26	RESET_b PTA20	N23	#MCA_RESET	
27	ADC0_SE8 PTB0/LLWU_P5 I2C0_SCL TPM1_CH0 - - - -	R23	MCA_IO2	
28	ADC0_SE9 PTB1 I2C0_SDA	H21	NANDF_CS1/#MCA_INT	Connected to i.MX6QP processor signal NANDF_CS1 (ball C16).

MCA		ConnectCore 6 Plus		
Pin Nr	**Signal name**	**Pad Nr**	**Signal name**	**Usage on module**
	TPM1_CH1 - - - -			
29	ADC0_SE12 PTB2 I2C0_SCL TPM2_CH0 - - - -	-	INTERNAL_I2C_SCL	Connected directly to PMIC I2C_SCL signal and to i.MX6QP processor I2C2_SCL/KEY_COL3 signal (ball U5) over N-channel MOSFET.
30	ADC0_SE13 PTB3 I2C0_SDA TPM2_CH1 - - - -	-	INTERNAL_I2C_SDA	Connected directly to PMIC I2C_SDA signal and to i.MX6QP processor I2C2_SDA/KEY_ROW3 signal (ball T7) over N-channel MOSFET.
31	- PTB16 SPI1_MOSI UART0_RX TPM_CLKIN0 SPI1_MISO - -	N22	MCA_IO7	
32	- PTB17 SPI1_MISO UART0_TX TPM_CLKIN1 SPI1_MOSI - -	P22	MCA_IO8	
33	ADC0_SE14 PTC0 - EXTRG_IN - CMP0_OUT - -	U24	MCA_IO4	

MCA		ConnectCore 6 Plus		
Pin Nr	**Signal name**	**Pad Nr**	**Signal name**	**Usage on module**
34	ADC0_SE15 PTC1/LLWU_P6/RTC_CLKIN I2C1_SCL - TPM0_CH0 - - -	-	KINETIS_32K	This MCA pin is connected to 32K output of the PMIC. For KL14, KL15, KL24 and KL25 this pin can be configured as RTC_CLKIN signal.
35	ADC0_SE11 PTC2 I2C1_SDA - TPM0_CH1 - - -	R22	MCA_IO9	
36	- PTC3/LLWU_P7 - UART1_RX TPM0_CH2 CLKOUT - -	T22	MCA_IO10	
37	- PTC4/LLWU_P8 SPI0_PCS0 UART1_TX TPM0_CH3 - - -	U22	MCA_IO11	
38	- PTC5/LLWU_P9 SPI0_SCK LPTMR0_ALT2 - - CMP0_OUT -	M21	MCA_IO12	
39	CMP0_IN0 PTC6/LLWU_	N21	MCA_IO13	

MCA		ConnectCore 6 Plus		
Pin Nr	**Signal name**	**Pad Nr**	**Signal name**	**Usage on module**
	P10 SPI0_MOSI EXTRG_IN - SPI0_MISO - -			
40	CMP0_IN1 PTC7 SPI0_MISO - - SPI0_MOSI - -	R20	MCA_IO19	
41	- PTD0 SPI0_PCS0 - TPM0_CH0 - - -	A6	CSI0_ DAT11/ECSPI2_ SS0	Connected to i.MX6QP processor signal CSI0_ DAT11 (ball M3) and to LGA pad A6. This pin can be configured as a SPI chip select shared between MCA and i.MX6QP processor.
42	ADC0_SE5b PTD1 SPI0_SCK - TPM0_CH1 - - -	D6	CSI0_ DAT8/ECSPI2_ SCLK	Connected to i.MX6QP processor signal CSI0_ DAT8 (ball N6) and to LGA pad D6. This pin can be configured as a SPI clock shared between MCA and i.MX6QP processor.
43	- PTD2 SPI0_MOSI UART2_RX TPM0_CH2 SPI0_MISO - -	K5	CSI0_ DAT10/ECSPI2_ MISO	Connected to i.MX6QP processor signal CSI0_ DAT10 (ball M1) and to LGA pad K5. This pin can be configured as a SPI MISO shared between MCA and i.MX6QP processor.
44	- PTD3 SPI0_MISO UART2_TX TPM0_CH3 SPI0_MOSI -	D5	CSI0_ DAT9/ECSPI2_ MOSI	Connected to i.MX6QP processor signal CSI0_ DAT9 (ball N5) and to LGA pad D5. This pin can be configured as a SPI MOSI shared between MCA and i.MX6QP processor.

MCA		ConnectCore 6 Plus		
Pin Nr	**Signal name**	**Pad Nr**	**Signal name**	**Usage on module**
	-			
45	- PTD4/LLWU_P14 SPI1_PCS0 UART2_RX TPM0_CH4 - - -	R21	MCA_IO16	
46	ADC0_SE6b PTD5 SPI1_SCK UART2_TX TPM0_CH5 - - -	T21	MCA_IO22	
47	ADC0_SE7b PTD6/LLWU_P15 SPI1_MOSI UART0_RX - SPI1_MISO - -	T24	MCA_IO3	
48	- PTD7 SPI1_MISO UART0_TX - SPI1_MOSI - -	AA20	MCA_IO21	

The i.MX6QP pads listed above are connected to ConnectCore 6 Plus pads. If the MCA microcontroller firmware doesn’t use these signals, they are available on the carrier board and can be used in any of the alternative functions listed above.

Shared I2C bus

The screenshot below shows how the I2C bus (I2C2) is used on ConnectCore 6 Plus module. The bus is shared between i.MX6QP processor and the PMIC, the MCA, and the cryptochip. The usage of N-channel MOSFET ensures the bus is fully isolated and allows the i.MX6QP processor to be shut off while MCA and PMIC are powered.

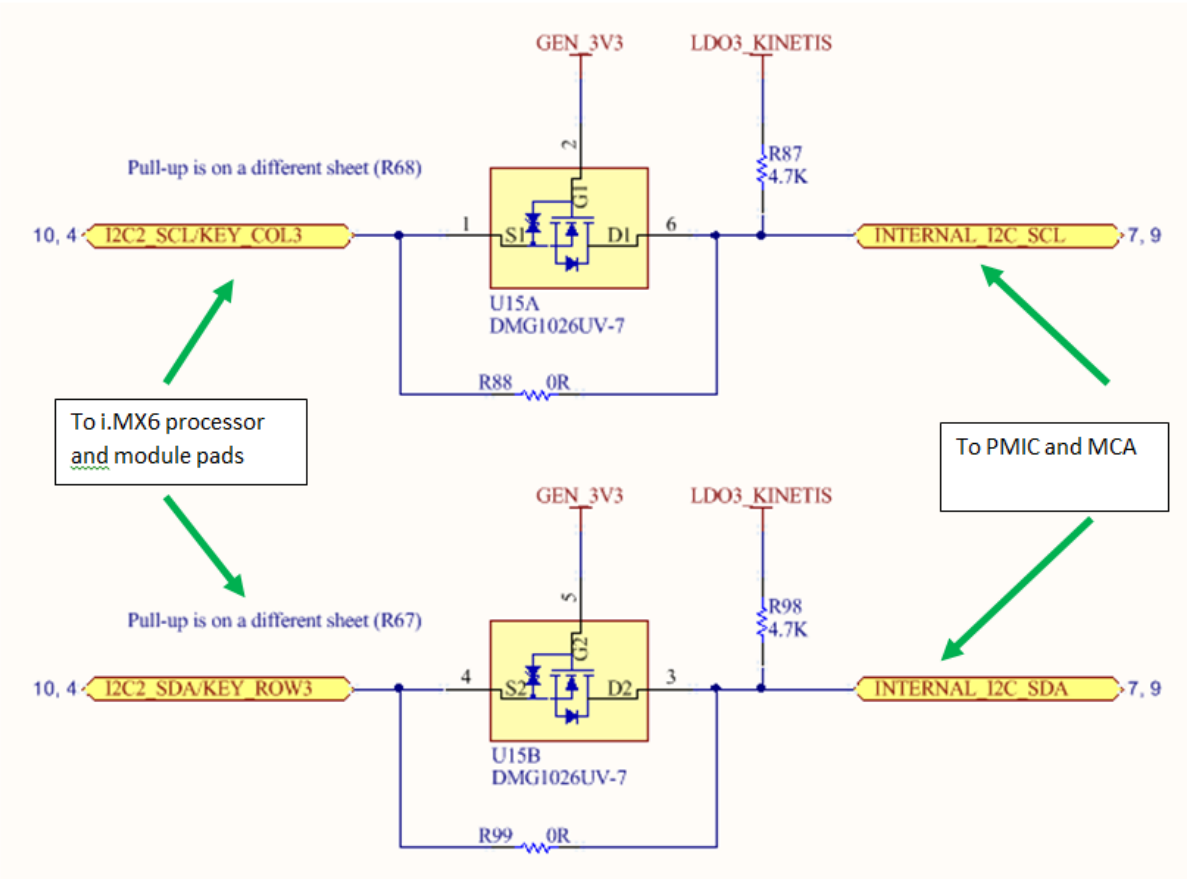

Shared SPI bus

In addition to an I2C interface, i.MX6QP shares an SPI bus with the MCA microcontroller. The table below shows this connection:

SPI function	i.MX6QP pad	MCA I/O
SPI Chip Select	CSI0_DAT11 (ConnectCore 6 Plus LGA pad A6): Alt0: IPU1_CSI0_DATA11 Alt1: AUD3_RXFS Alt2: ECSPI2_SS0 Alt3: UART1_RX_DATA Alt4: - Alt5: GPIO6_IO03 Alt6: - Alt7: ARM_TRACE14	PTD0 (MCA pin 41): Alt0: - Alt1: PTD0 Alt2: SPI0_PCS0 Alt3: - Alt4: - Alt5: TPM0_CH0 Alt6: - Alt7: -
SPI Clock	CSI0_DAT8 (ConnectCore 6 Plus LGA pad D6): Alt0: IPU1_CSI0_DATA08 Alt1: EIM_DATA06 Alt2: ECSPI2_SCLK Alt3: KEY_COL7 Alt4: I2C1_SDA Alt5: GPIO5_IO26 Alt6: - Alt7: ARM_TRACE05	PTD1 (MCA pin 42): Alt0: ADC0_SE5b Alt1: PTD1 Alt2: SPI0_SCK Alt3: - Alt4: TPM0_CH1 Alt5: - Alt6: - Alt7: -
SPI MISO	CSI0_DAT10 (ConnectCore 6 Plus LGA pad K5): Alt0: IPU1_CSI0_DATA10 Alt1: AUD3_RXC Alt2: ECSPI2_MISO Alt3: UART1_TX_DATA Alt4: - Alt5: GPIO5_IO28 Alt6: - Alt7: ARM_TRACE07	PTD2 (MCA pin 43): Alt0: - Alt1: PTD2 Alt2: SPI0_MOSI Alt3: UART2_RX Alt4: TPM0_CH2 Alt5: SPI0_MISO Alt6: - Alt7: -
SPI MOSI	CSI0_DAT9 (ConnectCore 6 Plus LGA pad D5): Alt0: IPU1_CSI0_DATA09 Alt1: EIM_DATA07 Alt2: ECSPI2_MOSI Alt3: KEY_ROW7 Alt4: I2C1_SCL Alt5: GPIO5_IO27 Alt6: - Alt7: ARM_TRACE06	PTD3 (MCA pin 44): Alt0: - Alt1: PTD3 Alt2: SPI0_MISO Alt3: UART2_TX Alt4: TPM0_CH3 Alt5: SPI0_MOSI Alt6: - Alt7: -

CryptoAuthentication device

The ConnectCore 6 Plus includes an Atmel CryptoAuthentication Device. This is a highly secure cryptographic co-processor with secure hardware-based key storage. It includes the following features:

- Performs high-speed public key (PKI) algorithms (ECDSA and ECDH).
- NIST standard P256 elliptic curve support.
- SHA-256 hash algorithm with HMAC option.
- 256-bit key length.
- Storage for up to 16 keys.
- Two high-endurance monotonic counters.
- Guaranteed unique 72-bit serial number.
- Internal High-quality FIPS Random Number Generator (RNG).
- 10 Kb EEPROM memory.

See the software documentation for information about supported cryptoauthentication features.

Module pinout

The module has an LGA pad structure based on 400 pads. See the following diagram for the general layout, which shows the top view of the module pinouts.

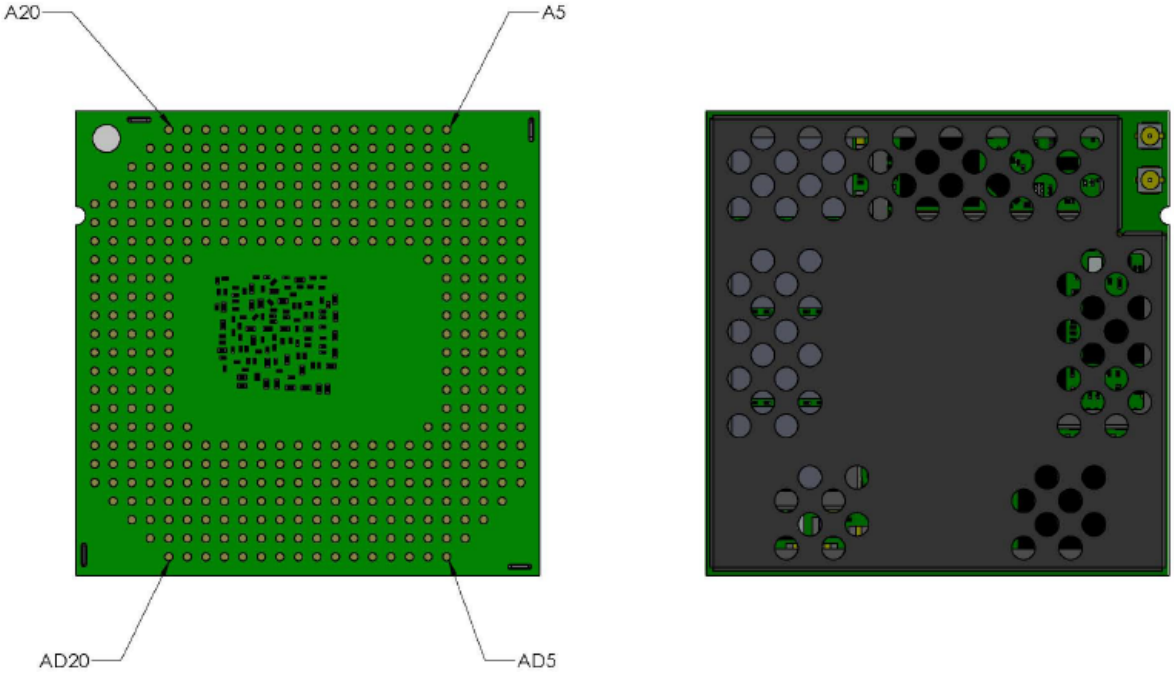

The following table provides the pinout of the ConnectCore 6 Plus module.

Additional timing and electrical information can be found in either the NXP i.MX6QP processor datasheet (www.nxp.com) or the Dialog DA9063 product datasheet (www.dialog-semiconductor.com).

The microprocessor used on this module, like all CMOS devices, can be driven into a latch-up condition if any I/O pin is driven outside of its associated power rail. Care must be taken to:

- Never drive an I/O pin beyond its positive rail or below ground.
- Never drive an I/O pin from an external power source during the power-on or reset sequences.
- Never hot-swap the module or interrupt its ground connection to external circuitry.

Latch-up is a condition that can cause excessive current draw and result in excessive heating of the microprocessor or its power supplies. This excessive heating can permanently damage the microprocessor and/or its supporting components.

LGA pad	Pad name	Multiplexing	Power group	Comments
A5	CSI0_MCLK	ALT0: IPU1_CSI0_HSYNC ALT1: ALT2: ALT3: CCM_CLKO1 ALT4: ALT5: GPIO5_IO19 ALT6: ALT7: ARM_TRACE_CTL	NVCC_CSI	
A6	CSI0_DAT11	ALT0: IPU1_CSI0_ DATA11 ALT1: AUD3_RXFS ALT2: ECSPI2_SS0 ALT3: UART1_RX_DATA ALT4: ALT5: GPIO5_IO29 ALT6: ALT7: ARM_TRACE08	NVCC_CSI	Connected to the on-module MCA microcontroller.
A7	CSI0_DAT17	ALT0: IPU1_CSI0_ DATA17 ALT1: EIM_DATA13 ALT2: ALT3: UART4_CTS_B ALT4: ALT5: GPIO6_IO03 ALT6: ALT7: ARM_TRACE14	NVCC_CSI	
A8	GND	-	-	
A9	HDMI_D0_N	-	HDMI_VPH	
A10	GND	-	-	
A11	CSI_CLK0_P	-	NVCC_MIPI	
A12	GND	-	-	
A13	CSI_D1_N	-	NVCC_MIPI	
A14	PCIE_RX_N	-	PCIE_VPH	
A15	PCIE_TX_N	-	PCIE_VPH	
A16	CLK2_P	-	VDD_HIGH_CAP	
A17	GND	-	-	
A18	CLK1_P	-	VDD_HIGH_CAP	
A19	MLB_DP	-	VDD_HIGH_CAP	
A20	MLB_DN	-	VDD_HIGH_CAP	

LGA pad	Pad name	Multiplexing	Power group	Comments
B4	LVDS0_TX2_P	-	NVCC_LVDS_2P5	
B5	GND	-	-	
B6	CSI0_DAT14	ALT0: IPU1_CSI0_ DATA14 ALT1: EIM_DATA10 ALT2: ALT3: UART5_TX_DATA ALT4: ALT5: GPIO6_IO00 ALT6: ALT7: ARM_TRACE11	NVCC_CSI	
B7	CSI0_DAT4	ALT0: IPU1_CSI0_ DATA04 ALT1: EIM_DATA02 ALT2: ECSPI1_SCLK ALT3: KEY_COL5 ALT4: AUD3_TXC ALT5: GPIO5_IO22 ALT6: ALT7: ARM_TRACE01	NVCC_CSI	
B8	HDMI_D1_N	-	HDMI_VPH	
B9	HDMI_D0_P	-	HDMI_VPH	
B10	DSI_D0_P	-	NVCC_MIPI	
B11	CSI_CLK0_N	-	NVCC_MIPI	
B12	CSI_D2_N	-	NVCC_MIPI	
B13	CSI_D1_P	-	NVCC_MIPI	
B14	PCIE_RX_P	-	PCIE_VPH	
B15	PCIE_TX_P	-	PCIE_VPH	
B16	CLK2_N	-	VDD_HIGH_CAP	
B17	GND	-	-	
B18	CLK1_N	-	VDD_HIGH_CAP	
B19	GND	-	-	
B20	GND	-	-	
B21	SD3_CLK/ BT_UART_RTS	ALT0: SD3_CLK ALT1: UART2_RTS_B ALT2: FLEXCAN1_RX ALT3: ALT4: ALT5: GPIO7_IO03	VGEN_3V3	Signal only available externally in non-wireless variants of the SOM.

LGA pad	Pad name	Multiplexing	Power group	Comments
		ALT6: ALT7:		
C3	KEY_COL3	ALT0: ECSPI1_SS3 ALT1: ENET_CRS ALT2: HDMI_TX_DDC_SCL ALT3: KEY_COL3 ALT4: I2C2_SCL ALT5: GPIO4_IO12 ALT6: SPDIF_IN ALT7:	VGEN_3V3	Connected to MCA processor and PMIC. Not recommended as main I2C port. 4.7K pull-up on module.
C4	LVDS0_TX2_N	-	NVCC_LVDS_2P5	
C5	CSI0_DAT6	ALT0: IPU1_CSI0_DATA06 ALT1: EIM_DATA04 ALT2: ECSPI1_MISO ALT3: KEY_COL6 ALT4: AUD3_TXFS ALT5: GPIO5_IO24 ALT6: ALT7: ARM_TRACE03	NVCC_CSI	
C6	CSI0_DAT13	ALT0: IPU1_CSI0_DATA13 ALT1: EIM_DATA09 ALT2: ALT3: UART4_RX_DATA ALT4: ALT5: GPIO5_IO31 ALT6: ALT7: ARM_TRACE10	NVCC_CSI	
C7	CSI0_DAT5	ALT0: IPU1_CSI0_DATA05 ALT1: EIM_DATA03 ALT2: ECSPI1_MOSI ALT3: KEY_ROW5 ALT4: AUD3_TXD ALT5: GPIO5_IO23 ALT6: ALT7: ARM_TRACE02	NVCC_CSI	
C8	HDMI_D1_P	-	HDMI_VPH	
C9	GND	-	-	
C10	DSI_D0_N	-	NVCC_MIPI	
C11	GND	-	-	

LGA pad	Pad name	Multiplexing	Power group	Comments
C12	CSI_D2_P	-	NVCC_MIPI	
C13	GND	-	-	
C14	GND	-	-	
C15	GND	-	-	
C16	USB_H1_DN	-	VDD_USB_CAP	
C17	TAMPER	-	VDD_SNVS_IN	
C18	PCM_IN	-	VGEN_3V3	
C19	MLB_SP	-	VDD_HIGH_CAP	
C20	MLB_SN	-	VDD_HIGH_CAP	
C21	SD3_DAT7	ALT0: SD3_DATA7 ALT1: UART1_TX_DATA ALT2: ALT3: ALT4: ALT5: GPIO6_IO17 ALT6: ALT7:	VGEN_3V3	
C22	SD3_DAT4/ BT_UART_RXD	ALT0: SD3_DATA4 ALT1: UART2_RX_DATA ALT2: ALT3: ALT4: ALT5: GPIO7_IO01 ALT6: ALT7:	VGEN_3V3	Signal only available externally in non-wireless variants of the SOM.
D2	KEY_ROW4	ALT0: FLEXCAN2_RX ALT1: IPU1_SISG5 ALT2: USB_OTG_PWR ALT3: KEY_ROW4 ALT4: UART5_CTS_B ALT5: GPIO4_IO15 ALT6: ALT7:	VGEN_3V3	
D3	KEY_ROW1	ALT0: ECSPI1_SS0 ALT1: ENET_COL ALT2: AUD5_RXD ALT3: KEY_ROW1 ALT4: UART5_RX_DATA ALT5: GPIO4_IO09 ALT6: SD2_VSELECT ALT7:	VGEN_3V3	

LGA pad	Pad name	Multiplexing	Power group	Comments
D4	GND	-	-	
D5	CSI0_DAT9	ALT0: IPU1_CSI0_ DATA09 ALT1: EIM_DATA07 ALT2: ECSPI2_MOSI ALT3: KEY_ROW7 ALT4: I2C1_SCL ALT5: GPIO5_IO27 ALT6: ALT7: ARM_TRACE06	NVCC_CSI	Connected to the on-module MCA microcontroller.
D6	CSI0_DAT8	ALT0: IPU1_CSI0_ DATA08 ALT1: EIM_DATA06 ALT2: ECSPI2_SCLK ALT3: KEY_COL7 ALT4: I2C1_SDA ALT5: GPIO5_IO26 ALT6: ALT7: ARM_TRACE05	NVCC_CSI	Connected to the on-module MCA microcontroller.
D7	HDMI_DDCCEC	-	HDMI_VPH	
D8	GND	-	-	
D9	DSI_D1_P	-	NVCC_MIPI	
D10	GND	-	-	
D11	CSI_D3_P	-	NVCC_MIPI	
D12	PCM_OUT	-	VGEN_3V3	
D13	#BT_DISABLE	-	WLAN/BT_3V3	
D14	JTAG_TDI	-	VGEN_3V3	
D15	#JTAG_TRST	-	VGEN_3V3	
D16	USB_H1_DP	-	VDD_USB_CAP	
D17	TEST_MODE	-	VDD_SNVS_IN	10K pull-down on module.
D18	ON/OFF	-	VDD_SNVS_IN	Input power on/off line of the module (active-low).
D19	SATA_TX_N	-	SATA_VPH	
D20	GND	-	-	
D21	SD3_DAT1	ALT0: SD3_DATA1 ALT1: UART1_RTS_B ALT2: FLEXCAN2_RX	VGEN_3V3	

LGA pad	Pad name	Multiplexing	Power group	Comments
		ALT3: ALT4: ALT5: GPIO7_IO05 ALT6: ALT7:		
D22	SD3_RST	ALT0: SD3_RESET ALT1: UART3_RTS_B ALT2: ALT3: ALT4: ALT5: GPIO7_IO08 ALT6: ALT7:	VGEN_3V3	
D23	SD3_DAT5/ BT_UART_TXD	ALT0: SD3_DATA5 ALT1: UART2_TX_DATA ALT2: ALT3: ALT4: ALT5: GPIO7_IO00 ALT6: ALT7:	VGEN_3V3	Signal only available externally in non-wireless variants of the SOM.
E1	LVDS1_CLK_N	-	NVCC_LVDS_2P5	
E2	KEY_ROW0	ALT0: ECSPI1_MOSI ALT1: ENET_TX_DATA3 ALT2: AUD5_TXD ALT3: KEY_ROW0 ALT4: UART4_RX_DATA ALT5: GPIO4_IO07 ALT6: DCIC2_OUT ALT7:	VGEN_3V3	
E3	KEY_COL1	ALT0: ECSPI1_MISO ALT1: ENET_MDIO ALT2: AUD5_TXFS ALT3: KEY_COL1 ALT4: UART5_TX_DATA ALT5: GPIO4_IO08 ALT6: SD1_VSELECT ALT7:	VGEN_3V3	
E4	LVDS0_TX1_P	-	NVCC_LVDS_2P5	
E5	CSI0_DATA_EN	ALT0: IPU1_CSI0_DATA_EN ALT1: EIM_DATA00 ALT2: ALT3: ALT4: ALT5: GPIO5_IO20	NVCC_CSI	

LGA pad	Pad name	Multiplexing	Power group	Comments
		ALT6: ALT7: ARM_TRACE_CLK		
E6	CSI0_DAT15	ALT0: IPU1_CSI0_ DATA15 ALT1: EIM_DATA11 ALT2: ALT3: UART5_RX_DATA ALT4: ALT5: GPIO6_IO01 ALT6: ALT7: ARM_TRACE12	NVCC_CSI	
E7	GND	-	-	
E8	HDMI_CLK_N	-	HDMI_VPH	
E9	DSI_D1_N	-	NVCC_MIPI	
E10	DSI_CLK0_N	-	NVCC_MIPI	
E11	CSI_D3_N	-	NVCC_MIPI	
E12	PCM_SYNC	-	VGEN_3V3	
E13	PCM_CLK	-	VGEN_3V3	
E14	JTAG_TDO	-	VGEN_3V3	
E15	Reserved	-	-	
E16	GND	-	-	
E17	BOOT_MODE0	-	VDD_SNVS_IN	10K pull-down on module.
E18	#POR	-	VDD_SNVS_IN	This is an active low, bi-directional line which is also driven by the PMIC in an open-drain output configuration. It can be used as either input or output: ■ Input: asserting this line resets the module CPU (only the CPU). ■ Output: line asserted

LGA pad	Pad name	Multiplexing	Power group	Comments
				during reset. Can be used to synchronize external circuitry reset.
E19	SATA_TX_P	-	SATA_VPH	
E20	VGEN_3V3	-	VGEN_3V3 VGEN_3V3	
E21	SD3_DAT6	ALT0: SD3_DATA6 ALT1: UART1_RX_DATA ALT2: ALT3: ALT4: ALT5: GPIO6_IO18 ALT6: ALT7:	VGEN_3V3	
E22	NANDF_CLE/ BT_WAKE	ALT0: NAND_CLE ALT1: IPU2_SISG4 ALT2: ALT3: ALT4: ALT5: GPIO6_IO07 ALT6: ALT7:	VGEN_3V3	Signal only available externally in non-wireless variants of the SOM.
E23	SD3_CMD/ BT_UART_CTS	ALT0: SD3_CMD ALT1: UART2_CTS_B ALT2: FLEXCAN1_TX ALT3: ALT4: ALT5: GPIO7_IO02 ALT6: ALT7:	VGEN_3V3	Signal only available externally in non-wireless variants of the SOM.
E24	SD3_DAT2	ALT0: SD3_DATA2 ALT1: ALT2: ALT3: ALT4: ALT5: GPIO7_IO06 ALT6: ALT7:	VGEN_3V3	
F1	LVDS1_CLK_P	-	NVCC_LVDS_2P5	
F2	KEY_ROW3	ALT0: ALT1: ASRC_EXT_CLK	VGEN_3V3	Connected to MCA processor and PMIC.

LGA pad	Pad name	Multiplexing	Power group	Comments
		ALT2: HDMI_TX_DDC_SDA ALT3: KEY_ROW3 ALT4: I2C2_SDA ALT5: GPIO4_IO13 ALT6: SD1_VSELECT ALT7:		Not recommended as main I2C port. 4.7K pull-up on module.
F3	GPIO_8	ALT0: ESAI_TX5_RX0 ALT1: XTALOSC_REF_CLK_32K ALT2: EPIT2_OUT ALT3: FLEXCAN1_RX ALT4: UART2_RX_DATA ALT5: GPIO1_IO08 ALT6: SPDIF_SR_CLK ALT7: USB_OTG_PWR_CTL_WAKE	VGEN_3V3	
F4	LVDS0_TX1_N	-	NVCC_LVDS_2P5	
F5	GND	-	-	
F6	CSI0_DAT18	ALT0: IPU1_CSI0_DATA18 ALT1: EIM_DATA14 ALT2: ALT3: UART5_RTS_B ALT4: ALT5: GPIO6_IO04 ALT6: ALT7: ARM_TRACE15	NVCC_CSI	
F7	HDMI_D2_N	-	HDMI_VPH	
F8	HDMI_CLK_P	-	HDMI_VPH	
F9	GND	-	-	
F10	DSI_CLK0_P	-	NVCC_MIPI	
F11	GND	-	-	
F12	GND	-	-	
F13	JTAG_TCK	-	VGEN_3V3	
F14	JTAG_TMS	-	VGEN_3V3	
F15	BOOT_MODE1	-	VDD_SNVS_IN	10K pull-up to VDD_SNVS_IN on module.
F16	USB_H1_VBUS	-	-	
F17	MLB_CP	-	-	

LGA pad	Pad name	Multiplexing	Power group	Comments
F18	MLB_CN	-	-	
F19	GND	-	-	
F20	SD3_DAT0	ALT0: SD3_DATA0 ALT1: UART1_CTS_B ALT2: FLEXCAN2_TX ALT3: ALT4: ALT5: GPIO7_IO04 ALT6: ALT7:	VGEN_3V3	
F21	NANDF_CS0	ALT0: NAND_CE0_B ALT1: ALT2: ALT3: ALT4: ALT5: GPIO6_IO11 ALT6: ALT7:	VGEN_3V3	
F22	#NANDF_WP	ALT0: NAND_WP_B ALT1: IPU2_SISG5 ALT2: ALT3: ALT4: ALT5: GPIO6_IO09 ALT6: ALT7:	VGEN_3V3	
F23	NANDF_CS3	ALT0: NAND_CE3_B ALT1: IPU1_SISG1 ALT2: ESAI_TX1 ALT3: EIM_ADDR26 ALT4: ALT5: GPIO6_IO16 ALT6: IPU2_SISG1 ALT7: ALT9: I2C4_SDA	VGEN_3V3	
F24	SD3_DAT3	ALT0: SD3_DATA3 ALT1: UART3_CTS_B ALT2: ALT3: ALT4: ALT5: GPIO7_IO07 ALT6: ALT7:	VGEN_3V3	
G1	GND	-	-	
G2	GPIO_0	ALT0: CCM_CLKO1 ALT1:	VGEN_3V3	

LGA pad	Pad name	Multiplexing	Power group	Comments
		ALT2: KEY_COL5 ALT3: ASRC_EXT_CLK ALT4: EPIT1_OUT ALT5: GPIO1_IO00 ALT6: USB_H1_PWR ALT7: SNVS_VIO_5		
G3	GPIO_2	ALT0: ESAI_TX_FS ALT1: ALT2: KEY_ROW6 ALT3: ALT4: ALT5: GPIO1_IO02 ALT6: SD2_WP ALT7: MLB_DATA	VGEN_3V3	
G4	GND	-	-	
G5	CSI0_PIXCLK	ALT0: IPU1_CSI0_ PIXCLK ALT1: ALT2: ALT3: ALT4: ALT5: GPIO5_IO18 ALT6: ALT7: ARM_EVENTO	NVCC_CSI	
G6	CSI0_DAT19	ALT0: IPU1_CSI0_ DATA19 ALT1: EIM_DATA15 ALT2: ALT3: UART5_CTS_B ALT4: ALT5: GPIO6_IO05 ALT6: ALT7:	NVCC_CSI	
G7	HDMI_D2_P	-	HDMI_VPH	
G8	GND	-	-	
G9	HDMI_HPD	-	HDMI_VPH	
G10	GND	-	-	
G11	CSI_D0_P	-	NVCC_MIPI	
G12	CSI_D0_N	-	NVCC_MIPI	
G13	JTAG_MOD	-	VGEN_3V3	
G14	USB_OTG_VBUS	-	USB_OTG_VBUS	

LGA pad	Pad name	Multiplexing	Power group	Comments
G15	#USB_OTG_CHD	-	VDD_USB_CAP	
G16	USB_OTG_DN	-	VDD_USB_CAP	
G17	USB_OTG_DP	-	VDD_USB_CAP	
G18	GND	-	-	
G19	SATA_RX_N	-	SATA_VPH	
G20	VGEN_3V3	-	-	
G21	NANDF_D2	ALT0: NAND_DATA02 ALT1: SD1_DATA6 ALT2: ALT3: ALT4: ALT5: GPIO2_IO02 ALT6: ALT7:	VGEN_3V3	
G22	NANDF_D6	ALT0: NAND_DATA06 ALT1: SD2_DATA6 ALT2: ALT3: ALT4: ALT5: GPIO2_IO06 ALT6: ALT7:	VGEN_3V3	
G23	NANDF_D3	ALT0: NAND_DATA03 ALT1: SD1_DATA7 ALT2: ALT3: ALT4: ALT5: GPIO2_IO03 ALT6: ALT7:	VGEN_3V3	
G24	NANDF_ALE	ALT0: NAND_ALE ALT1: SD4_RESET ALT2: ALT3: ALT4: ALT5: GPIO6_IO08 ALT6: ALT7:	VGEN_3V3	
H1	LVDS1_TX0_N	-	NVCC_LVDS_2P5	
H2	KEY_ROW2	ALT0: ECSPI1_SS2 ALT1: ENET_TX_DATA2 ALT2: FLEXCAN1_RX ALT3: KEY_ROW2 ALT4: SD2_VSELECT	VGEN_3V3	

LGA pad	Pad name	Multiplexing	Power group	Comments
		ALT5: GPIO4_IO11 ALT6: HDMI_TX_CEC_LINE ALT7:		
H3	GPIO_9	ALT0: ESAI_RX_FS ALT1: WDOG1_B ALT2: KEY_COL6 ALT3: CCM_REF_EN_B ALT4: PWM1_OUT ALT5: GPIO1_IO09 ALT6: SD1_WP ALT7:	VGEN_3V3	
H4	LVDS0_TX0_P	-	NVCC_LVDS_2P5	
H5	GND	-	-	
H6	CSI0_DAT16	ALT0: IPU1_CSI0_DATA16 ALT1: EIM_DATA12 ALT2: ALT3: UART4_RTS_B ALT4: ALT5: GPIO6_IO02 ALT6: ALT7: ARM_TRACE13	NVCC_CSI	
H19	SATA_RX_P	-	SATA_VPH	
H20	GND	-	-	
H21	NANDF_CS1/ #MCA_INT	ALT0: NAND_CE1_B ALT1: SD4_VSELECT ALT2: SD3_VSELECT ALT3: ALT4: ALT5: GPIO6_IO14 ALT6: ALT7:	VGEN_3V3	Connected to MCA processor.
H22	NANDF_D1	ALT0: NAND_DATA01 ALT1: SD1_DATA5 ALT2: ALT3: ALT4: ALT5: GPIO2_IO01 ALT6: ALT7:	VGEN_3V3	
H23	NANDF_D7	ALT0: NAND_DATA07 ALT1: SD2_DATA7 ALT2: ALT3:	VGEN_3V3	

LGA pad	Pad name	Multiplexing	Power group	Comments
		ALT4: ALT5: GPIO2_IO07 ALT6: ALT7:		
H24	NANDF_CS2	ALT0: NAND_CE2_B ALT1: IPU1_SISG0 ALT2: ESAI_TX0 ALT3: EIM_CRE ALT4: CCM_CLKO2 ALT5: GPIO6_IO15 ALT6: IPU2_SISG0 ALT7:	VGEN_3V3	
J1	LVDS1_TX0_P	-	NVCC_LVDS_2P5	
J2	KEY_COL0	ALT0: ECSPI1_SCLK ALT1: ENET_RX_DATA3 ALT2: AUD5_TXC ALT3: KEY_COL0 ALT4: UART4_TX_DATA ALT5: GPIO4_IO06 ALT6: DCIC1_OUT ALT7:	VGEN_3V3	
J3	GPIO_6	ALT0: ESAI_TX_CLK ALT1: ALT2: I2C3_SDA ALT3: ALT4: ALT5: GPIO1_IO06 ALT6: SD2_LCTL ALT7: MLB_SIG	VGEN_3V3	
J4	LVDS0_TX0_N	-	NVCC_LVDS_2P5	
J5	CSI0_VSYNC	ALT0: IPU1_CSI0_VSYNC ALT1: EIM_DATA01 ALT2: ALT3: ALT4: ALT5: GPIO5_IO21 ALT6: ALT7: ARM_TRACE00	NVCC_CSI	
J20	VGEN_3V3	-	-	
J21	SD1_DAT2	ALT0: SD1_DATA2 ALT1: ECSPI5_SS1 ALT2: GPT_COMPARE2 ALT3: PWM2_OUT ALT4: WDOG1_B ALT5: GPIO1_IO19 ALT6: WDOG1_RESET_	VDD_WLAN_SD1	Signal only available externally in non-wireless variants of the SOM.

LGA pad	Pad name	Multiplexing	Power group	Comments
		B_DEB ALT7:		
J22	SD1_DAT1	ALT0: SD1_DATA1 ALT1: ECSPI5_SS0 ALT2: PWM3_OUT ALT3: GPT_CAPTURE2 ALT4: ALT5: GPIO1_IO17 ALT6: ALT7:	VDD_WLAN_SD1	Signal only available externally in non-wireless variants of the SOM.
J23	SD1_CMD	ALT0: SD1_CMD ALT1: ECSPI5_MOSI ALT2: PWM4_OUT ALT3: GPT_COMPARE1 ALT4: ALT5: GPIO1_IO18 ALT6: ALT7:	VDD_WLAN_SD1	Signal only available externally in non-wireless variants of the SOM.
J24	NANDF_D0	ALT0: NAND_DATA00 ALT1: SD1_DATA4 ALT2: ALT3: ALT4: ALT5: GPIO2_IO00 ALT6: ALT7:	VGEN_3V3	
K1	GND	-	-	
K2	KEY_COL2	ALT0: ECSPI1_SS1 ALT1: ENET_RX_DATA2 ALT2: FLEXCAN1_TX ALT3: KEY_COL2 ALT4: ENET_MDC ALT5: GPIO4_IO10 ALT6: USB_H1_PWR_ CTL_WAKE ALT7:	VGEN_3V3	
K3	GPIO_1	ALT0: ESAI_RX_CLK ALT1: WDOG2_B ALT2: KEY_ROW5 ALT3: USB_OTG_ID ALT4: PWM2_OUT ALT5: GPIO1_IO01 ALT6: SD1_CD_B ALT7:	VGEN_3V3	
K4	GND	-	-	
K5	CSI0_DAT10	ALT0: IPU1_CSI0_	NVCC_CSI	Connected to the

LGA pad	Pad name	Multiplexing	Power group	Comments
		DATA10 ALT1: AUD3_RXC ALT2: ECSPI2_MISO ALT3: UART1_TX_DATA ALT4: ALT5: GPIO5_IO28 ALT6: ALT7: ARM_TRACE07		on-module MCA microcontroller.
K20	VGEN_3V3	-	-	
K21	SD2_DAT1	ALT0: SD2_DATA1 ALT1: ECSPI5_SS0 ALT2: EIM_CS2 ALT3: AUD4_TXFS ALT4: KEY_COL7 ALT5: GPIO1_IO14 ALT6: ALT7:	VDD_SD2	
K22	SD2_CLK	ALT0: SD2_CLK ALT1: ECSPI5_SCLK ALT2: KEY_COL5 ALT3: AUD4_RXFS ALT4: ALT5: GPIO1_IO10 ALT6: ALT7:	VDD_SD2	
K23	SD2_DAT3	ALT0: SD2_DATA3 ALT1: ECSPI5_SS3 ALT2: KEY_COL6 ALT3: AUD4_TXC ALT4: ALT5: GPIO1_IO12 ALT6: ALT7:	VDD_SD2	
K24	NANDF_D4	ALT0: NAND_DATA04 ALT1: SD2_DATA4 ALT2: ALT3: ALT4: ALT5: GPIO2_IO04 ALT6: ALT7:	VGEN_3V3	
L1	LVDS1_TX1_P	-	NVCC_LVDS_2P5	
L2	KEY_COL4	ALT0: FLEXCAN2_TX ALT1: IPU1_SISG4 ALT2: USB_OTG_OC ALT3: KEY_COL4 ALT4: UART5_RTS_B	VGEN_3V3	

LGA pad	Pad name	Multiplexing	Power group	Comments
		ALT5: GPIO4_IO14 ALT6: ALT7:		
L3	GPIO_4	ALT0: ESAI_TX_HF_CLK ALT1: ALT2: KEY_COL7 ALT3: ALT4: ALT5: GPIO1_IO04 ALT6: SD2_CD_B ALT7:	VGEN_3V3	
L4	LVDS0_CLK_P	-	NVCC_LVDS_2P5	
L5	CSI0_DAT12	ALT0: IPU1_CSI0_DATA12 ALT1: EIM_DATA08 ALT2: ALT3: UART4_TX_DATA ALT4: ALT5: GPIO5_IO30 ALT6: ALT7: ARM_TRACE09	NVCC_CSI	
L20	SD1_DAT3	ALT0: SD1_DATA3 ALT1: ECSPI5_SS2 ALT2: GPT_COMPARE3 ALT3: PWM1_OUT ALT4: WDOG2_B ALT5: GPIO1_IO21 ALT6: WDOG2_RESET_B_DEB ALT7:	VDD_WLAN_SD1	Signal only available externally in non-wireless variants of the SOM.
L21	SD1_CLK	ALT0: SD1_CLK ALT1: ECSPI5_SCLK ALT2: ALT3: GPT_CLKIN ALT4: ALT5: GPIO1_IO20 ALT6: ALT7:	VDD_WLAN_SD1	Signal only available externally in non-wireless variants of the SOM.
L22	GND	-	-	
L23	MCA_SWD_CLK	ALT0: - ALT1: PTA0 ALT2: - ALT3: TMP0_CH5 ALT4: - ALT5: - ALT6: -	LDO3_MCA	Signal only available in variants carrying the MCA.

LGA pad	Pad name	Multiplexing	Power group	Comments
		ALT7: SWD_CLK		
L24	NANDF_D5	ALT0: NAND_DATA05 ALT1: SD2_DATA5 ALT2: ALT3: ALT4: ALT5: GPIO2_IO05 ALT6: ALT7:	VGEN_3V3	
M1	LVDS1_TX1_N	-	NVCC_LVDS_2P5	
M2	GPIO_19	ALT0: KEY_COL5 ALT1: ENET_1588_EVENT0_OUT ALT2: SPDIF_OUT ALT3: CCM_CLKO1 ALT4: ECSPI1_RDY ALT5: GPIO4_IO05 ALT6: ENET_TX_ER ALT7:	NVCC_GPIO (VGEN_3V3)	
M3	GPIO_16	ALT0: ESAI_TX3_RX2 ALT1: ENET_1588_EVENT2_IN ALT2: ENET_REF_CLK ALT3: SD1_LCTL ALT4: SPDIF_IN ALT5: GPIO7_IO11 ALT6: I2C3_SDA ALT7: JTAG_DE_B	NVCC_GPIO (VGEN_3V3)	
M4	LVDS0_CLK_N	-	NVCC_LVDS_2P5	
M5	CSI0_DAT7	ALT0: IPU1_CSI0_DATA07 ALT1: EIM_DATA05 ALT2: ECSPI1_SS0 ALT3: KEY_ROW6 ALT4: AUD3_RXD ALT5: GPIO5_IO25 ALT6: ALT7: ARM_TRACE04	NVCC_CSI	
M20	SD2_CMD	ALT0: SD2_CMD ALT1: ECSPI5_MOSI ALT2: KEY_ROW5 ALT3: AUD4_RXC ALT4: ALT5: GPIO1_IO11 ALT6: ALT7:	NVCC_SD2 (VGEN_3V3)	

LGA pad	Pad name	Multiplexing	Power group	Comments
M21	MCA_IO12	ALT0: - ALT1: PTC5/LLWU_P9 ALT2: SPI0_SCK ALT3: LPTMR0_ALT2 ALT4: - ALT5: - ALT6: CMP0_OUT ALT7: -	LDO3_MCA	Signal only available in variants carrying the MCA.
M22	LDO3_MCA	-	-	
M23	MCA_SWD_DIO	ALT0: - ALT1: PTA3 ALT2: I2C1_SCL ALT3: TPM0_CH0 ALT4: - ALT5: - ALT6: - ALT7: SWD_DIO	LDO3_MCA	Signal only available in variants carrying the MCA.
M24	NANDF_RB0	ALT0: NAND_READY ALT1: IPU2_DI0_PIN01 ALT2: ALT3: ALT4: ALT5: GPIO6_IO10 ALT6: ALT7:	NVCC_NANDF (VGEN_3V3)	
N1	GND	-	-	
N2	GPIO_18	ALT0: ESAI_TX1 ALT1: ENET_RX_CLK ALT2: SD3_VSELECT ALT3: SDMA_EXT_ EVENT1 ALT4: ASRC_EXT_CLK ALT5: GPIO7_IO13 ALT6: SNVS_VIO_5_CTL ALT7:	NVCC_GPIO (VGEN_3V3)	
N3	VCC_LICELL	-	-	
N4	GND	-	-	
N5	VGEN_3V3	-	-	
N20	MCA_IO/USB0_P	ALT0: ADC0_SE1 ALT1: PTE16 ALT2: SPI0_PCS0 ALT3: UART2_TX ALT4: TPM_CLKIN0 ALT5: -	LDO3_MCA	Signal only available in variants carrying the MCA.

LGA pad	Pad name	Multiplexing	Power group	Comments
		ALT6: - ALT7: -		
N21	MCA_IO13	ALT0: CMP0_IN0 ALT1: PTC6/LLWU_P10 ALT2: SPI0_MOSI ALT3: EXTRG_IN ALT4: - ALT5: SPI0_MISO ALT6: - ALT7: -	LDO3_MCA	Signal only available in variants carrying the MCA.
N22	MCA_IO7	ALT0: - ALT1: PTB16 ALT2: SPI1_MOSI ALT3: UART0_RX ALT4: TPM_CLKIN0 ALT5: SPI1_MISO ALT6: - ALT7: -	LDO3_MCA	Signal only available in variants carrying the MCA.
N23	#MCA_RESET	ALT0: RESET_b ALT1: PTA20 ALT2: - ALT3: - ALT4: - ALT5: - ALT6: - ALT7: -	LDO3_MCA	Signal only available in variants carrying the MCA.
N24	SD1_DAT0	ALT0: SD1_DATA0 ALT1: ECSPI5_MISO ALT2: ALT3: GPT_CAPTURE1 ALT4: ALT5: GPIO1_IO16 ALT6: ALT7:	NVCC_SD1 (VGEN_3V3)	Signal only available externally in non-wireless variants of the SOM.
P1	LVDS1_TX2_N	-	NVCC_LVDS_2P5	
P2	ENET_CRS_DV	ALT0: ENET_RX_EN ALT1: ESAI_TX_CLK ALT2: SPDIF_EXT_CLK ALT3: ALT4: ALT5: GPIO1_IO25 ALT6: ALT7:	NVCC_ENET	
P3	GPIO_7	ALT0: ESAI_TX4_RX1 ALT1: ECSPI5_RDY ALT2: EPIT1_OUT	NVCC_GPIO (VGEN_3V3)	

LGA pad	Pad name	Multiplexing	Power group	Comments
		ALT3: FLEXCAN1_TX ALT4: UART2_TX_DATA ALT5: GPIO1_IO07 ALT6: SPDIF_LOCK ALT7: USB_OTG_HOST_MODE		
P4	LVDS0_TX3_P	-	NVCC_LVDS_2P5	
P5	NVCC_CSI	-	-	
P20	MCA_IO/USB0_N	ALT0: ADC0_SE5a ALT1: PTE17 ALT2: SPI0_SCK ALT3: UART2_RX ALT4: TPM_CLKIN1 ALT5: - ALT6: LPTMR0_ALT3 ALT7: -	LDO3_MCA	Signal only available in variants carrying the MCA.
P21	MCA_IO14	ALT0: ADC0_SE6a ALT1: PTE19 ALT2: SPI0_MISO ALT3: - ALT4: I2C0_SCL ALT5: SPI0_MOSI ALT6: - ALT7: -	LDO3_MCA	Signal only available in variants carrying the MCA.
P22	MCA_IO8	ALT0: - ALT1: PTB17 ALT2: SPI1_MISO ALT3: UART0_TX ALT4: TPM_CLKIN1 ALT5: SPI1_MOSI ALT6: - ALT7: -	LDO3_MCA	Signal only available in variants carrying the MCA.
P23	MCA_IO1	ALT0: ADC0_SE4a ALT1: PTE21 ALT2: - ALT3: TPM1_CH1 ALT4: UART0_RX ALT5: - ALT6: - ALT7: -	LDO3_MCA	Signal only available in variants carrying the MCA.
P24	SD2_DAT0	ALT0: SD2_DATA0 ALT1: ECSPI5_MISO ALT2: ALT3: AUD4_RXD ALT4: KEY_ROW7 ALT5: GPIO1_IO15	NVCC_SD2 (VGEN_3V3)	

LGA pad	Pad name	Multiplexing	Power group	Comments
		ALT6: DCIC2_OUT ALT7:		
R1	LVDS1_TX2_P	-	NVCC_LVDS_2P5	
R2	ENET_RX_ER	ALT0: USB_OTG_ID ALT1: ENET_RX_ER ALT2: ESAI_RX_HF_CLK ALT3: SPDIF_IN ALT4: ENET_1588_ EVENT2_OUT ALT5: GPIO1_IO24 ALT6: ALT7:	NVCC_ENET	
R3	GPIO_5	ALT0: ESAI_TX2_RX3 ALT1: ALT2: KEY_ROW7 ALT3: CCM_CLKO1 ALT4: ALT5: GPIO1_IO05 ALT6: I2C3_SCL ALT7: ARM_EVENTI	NVCC_GPIO (VGEN_3V3)	
R4	LVDS0_TX3_N	-	NVCC_LVDS_2P5	
R5	NVCC_RGMII	-	-	
R20	MCA_IO19	ALT0: CMP0_IN1 ALT1: PTC7 ALT2: SPI0_MISO ALT3: - ALT4: - ALT5: SPI0_MOSI ALT6: - ALT7: -	LDO3_MCA	Signal only available in variants carrying the MCA.
R21	MCA_IO16	ALT0: - ALT1: PTD4/LLWU_P14 ALT2: SPI1_PCS0 ALT3: UART2_RX ALT4: TPM0_CH4 ALT5: - ALT6: - ALT7: -	LDO3_MCA	Signal only available in variants carrying the MCA.
R22	MCA_IO9	ALT0: ADC0_SE11 ALT1: PTC2 ALT2: I2C1_SDA ALT3: - ALT4: TPM0_CH1 ALT5: - ALT6: - ALT7: -	LDO3_MCA	Signal only available in variants carrying the MCA.

LGA pad	Pad name	Multiplexing	Power group	Comments
R23	MCA_IO2	ALT0: ADC0_SE8 ALT1: PTB0/LLWU_P5 ALT2: I2C0_SCL ALT3: TPM1_CH0 ALT4: - ALT5: - ALT6: - ALT7: -	LDO3_MCA	Signal only available in variants carrying the MCA.
R24	SD2_DAT2	ALT0: SD2_DATA2 ALT1: ECSPI5_SS1 ALT2: EIM_CS3 ALT3: AUD4_TXD ALT4: KEY_ROW6 ALT5: GPIO1_IO13 ALT6: ALT7:	NVCC_SD2 (VGEN_3V3)	
T1	GND	-	-	
T2	GND	-	-	
T3	GPIO_3	ALT0: ESAI_RX_HF_CLK ALT1: ALT2: I2C3_SCL ALT3: XTALOSC_REF_ CLK_24M ALT4: CCM_CLKO2 ALT5: GPIO1_IO03 ALT6: USB_H1_OC ALT7: MLB_CLK	NVCC_GPIO (VGEN_3V3)	
T4	GND	-	-	
T5	GND	-	-	
T20	MCA_IO24	ALT0: XTAL0 ALT1: PTA19 ALT2: - ALT3: UART1_TX ALT4: TPM_CLKIN1 ALT5: - ALT6: LPTMR0_ALT1 ALT7: -	LDO3_MCA	Signal only available in variants carrying the MCA.
T21	MCA_IO22	ALT0: ADC0_SE6b ALT1: PTD5 ALT2: SPI1_SCK ALT3: UART2_TX ALT4: TPM0_CH5 ALT5: - ALT6: - ALT7: -	LDO3_MCA	Signal only available in variants carrying the MCA.

LGA pad	Pad name	Multiplexing	Power group	Comments
T22	MCA_IO10	ALT0: - ALT1: PTC3/LLWU_P7 ALT2: - ALT3: UART1_RX ALT4: TPM0_CH2 ALT5: CLKOUT ALT6: - ALT7: -	LDO3_MCA	Signal only available in variants carrying the MCA.
T23	MCA_IO0	ALT0: ADC0_SE0 ALT1: PTE20 ALT2: - ALT3: TPM1_CH0 ALT4: UART0_TX ALT5: - ALT6: - ALT7: -	LDO3_MCA	Signal only available in variants carrying the MCA.
T24	MCA_IO3	ALT0: ADC0_SE7b ALT1: PTD6/LLWU_P15 ALT2: SPI1_MOSI ALT3: UART0_RX ALT4: - ALT5: SPI1_MISO ALT6: - ALT7: -	LDO3_MCA	Signal only available in variants carrying the MCA.
U1	LVDS1_TX3_N	-	NVCC_LVDS_2P5	
U2	ENET_TXD0	ALT0: ALT1: ENET_TX_DATA0 ALT2: ESAI_TX4_RX1 ALT3: ALT4: ALT5: GPIO1_IO30 ALT6: ALT7:	NVCC_ENET	
U3	GND	-	-	
U4	RGMII_TXC	ALT0: USB_H2_DATA ALT1: RGMII_TXC ALT2: SPDIF_EXT_CLK ALT3: ALT4: ALT5: GPIO6_IO19 ALT6: ALT7: XTALOSC_REF_CLK_24M	NVCC_RGMII	
U5	RGMII_TD0	ALT0: HSI_TX_READY ALT1: RGMII_TD0 ALT2:	NVCC_RGMII	

LGA pad	Pad name	Multiplexing	Power group	Comments
		ALT3: ALT4: ALT5: GPIO6_IO20 ALT6: ALT7:		
U6	DISP0_DAT21	ALT0: IPU1_DISP0_ DATA21 ALT1: IPU2_DISP0_ DATA21 ALT2: ECSPI1_MOSI ALT3: AUD4_TXD ALT4: ALT5: GPIO5_IO15 ALT6: ALT7:	NVCC_LCD	
U19	EIM_DA3	ALT0: EIM_DA03 ALT1: IPU1_DISP1_ DATA06 ALT2: IPU2_CSI1_ DATA06 ALT3: ALT4: ALT5: GPIO3_IO03 ALT6: ALT7: SRC_BOOT_ CFG03	NVCC_EIM	
U20	EIM_DA0	ALT0: EIM_AD00 ALT1: IPU1_DISP1_ DATA09 ALT2: IPU2_CSI1_ DATA09 ALT3: ALT4: ALT5: GPIO3_IO00 ALT6: ALT7: SRC_BOOT_ CFG00	NVCC_EIM	
U21	EIM_LBA	ALT0: EIM_LBA ALT1: IPU1_DI1_PIN17 ALT2: ECSPI2_SS1 ALT3: ALT4: ALT5: GPIO2_IO27 ALT6: ALT7: SRC_BOOT_ CFG26	NVCC_EIM	
U22	MCA_IO11	ALT0: -	LDO3_MCA	Signal only available

LGA pad	Pad name	Multiplexing	Power group	Comments
		ALT1: PTC4/LLWU_P8 ALT2: SPI0_PCS0 ALT3: UART1_TX ALT4: TPM0_CH3 ALT5: - ALT6: - ALT7: -		in variants carrying the MCA.
U23	EIM_DA6	ALT0: EIM_AD06 ALT1: IPU1_DISP1_ DATA03 ALT2: IPU2_CSI1_ DATA03 ALT3: ALT4: ALT5: GPIO3_IO06 ALT6: ALT7: SRC_BOOT_ CFG06	NVCC_EIM	10K pull-up to NVCC_EIM on module.
U24	MCA_IO4	ALT0: ADC0_SE14 ALT1: PTC0 ALT2: - ALT3: EXTRG_IN ALT4: - ALT5: CMP0_OUT ALT6: - ALT7: -	LDO3_MCA	Signal only available in variants carrying the MCA.
V1	LVDS1_TX3_P	-	NVCC_LVDS_2P5	
V2	ENET_TXD1	ALT0: MLB_CLK ALT1: ENET_TX_DATA1 ALT2: ESAI_TX2_RX3 ALT3: ALT4: ENET_1588_ EVENT0_IN ALT5: GPIO1_IO29 ALT6: ALT7:	NVCC_ENET	
V3	NVCC_ENET	-	-	
V4	RGMII_RX_CTL	ALT0: USB_H3_DATA ALT1: RGMII_RX_CTL ALT2: ALT3: ALT4: ALT5: GPIO6_IO24 ALT6: ALT7:	NVCC_RGMII	
V5	RGMII_TD1	ALT0: HSI_RX_FLAG	NVCC_RGMII	

LGA pad	Pad name	Multiplexing	Power group	Comments
		ALT1: RGMII_TD1 ALT2: ALT3: ALT4: ALT5: GPIO6_IO21 ALT6: ALT7:		
V6	DISP0_DAT16	ALT0: IPU1_DISP0_DATA16 ALT1: IPU2_DISP0_DATA16 ALT2: ECSPI2_MOSI ALT3: AUD5_TXC ALT4: SDMA_EXT_EVENT0 ALT5: GPIO5_IO10 ALT6: ALT7:	NVCC_LCD	
V7	DISP0_DAT22	ALT0: IPU1_DISP0_DATA22 ALT1: IPU2_DISP0_DATA22 ALT2: ECSPI1_MISO ALT3: AUD4_TXFS ALT4: ALT5: GPIO5_IO16 ALT6: ALT7:	NVCC_LCD	
V8	DI0_PIN3	ALT0: IPU1_DI0_PIN03 ALT1: IPU2_DI0_PIN03 ALT2: AUD6_TXFS ALT3: ALT4: ALT5: GPIO4_IO19 ALT6: ALT7:	NVCC_LCD	
V9	DI0_DISP_CLK	ALT0: IPU1_DI0_DISP_CLK ALT1: IPU2_DI0_DISP_CLK ALT2: ALT3: ALT4: ALT5: GPIO4_IO16 ALT6: ALT7:	NVCC_LCD	
V10	DI0_PIN15	ALT0: IPU1_DI0_PIN15 ALT1: IPU2_DI0_PIN15	NVCC_LCD	

LGA pad	Pad name	Multiplexing	Power group	Comments
		ALT2: AUD6_TXC ALT3: ALT4: ALT5: GPIO4_IO17 ALT6: ALT7:		
V11	VSYS	-	-	
V12	PMIC_GPIO11	-	-	PMIC
V13	PMIC_GPIO15	-	-	PMIC
V14	CHG_WAKE	-	-	PMIC
V15	EIM_OE	ALT0: EIM_OE ALT1: IPU1_DI1_PIN07 ALT2: ECSPI2_MISO ALT3: ALT4: ALT5: GPIO2_IO25 ALT6: ALT7:	NVCC_EIM	
V16	EIM_EB1	ALT0: EIM_EB1 ALT1: IPU1_DISP1_ DATA10 ALT2: IPU2_CSI1_ DATA10 ALT3: ALT4: ALT5: GPIO2_IO29 ALT6: ALT7: SRC_BOOT_ CFG28	NVCC_EIM	
V17	EIM_D17	ALT0: EIM_DATA17 ALT1: ECSPI1_MISO ALT2: IPU1_DI0_PIN06 ALT3: IPU2_CSI1_ PIXCLK ALT4: DCIC1_OUT ALT5: GPIO3_IO17 ALT6: I2C3_SCL ALT7:	NVCC_EIM	
V18	EIM_DA11	ALT0: EIM_DA11 ALT1: IPU1_DI1_PIN02 ALT2: IPU2_CSI1_HSYNC ALT3: ALT4: ALT5: GPIO3_IO11 ALT6:	NVCC_EIM	10K pull-up to NVCC_EIM on module.

LGA pad	Pad name	Multiplexing	Power group	Comments
		ALT7: SRC_BOOT_ CFG11		
V19	EIM_DA9	ALT0: EIM_DA9 ALT1: IPU1_DISP1_ DATA00 ALT2: IPU2_CSI1_ DATA00 ALT3: ALT4: ALT5: GPIO3_IO09 ALT6: ALT7: SRC_BOOT_ CFG09	NVCC_EIM	
V20	EIM_DA13	ALT0: EIM_DA13 ALT1: IPU1_DI1_D0_CS ALT2: ALT3: ALT4: ALT5: GPIO3_IO13 ALT6: ALT7: SRC_BOOT_ CFG13	NVCC_EIM	10K pull-down on module.
V21	EIM_DA10	ALT0: EIM_DA10 ALT1: IPU1_DI1_PIN15 ALT2: IPU2_CSI1_DATA_ EN ALT3: ALT4: ALT5: GPIO3_IO10 ALT6: ALT7: SRC_BOOT_ CFG10	NVCC_EIM	
V22	EIM_DA12	ALT0: EIM_DA12 ALT1: IPU1_DI1_PIN03 ALT2: IPU2_CSI1_VSYNC ALT3: ALT4: ALT5: GPIO3_IO12 ALT6: ALT7: SRC_BOOT_ CFG12	NVCC_EIM	10K pull-up to NVCC_EIM on module.
V23	GND	-	-	
V24	EIM_DA2	ALT0: EIM_DA02 ALT1: IPU1_DISP1_ DATA07 ALT2: IPU2_CSI1_ DATA07	NVCC_EIM	

LGA pad	Pad name	Multiplexing	Power group	Comments
		ALT3: ALT4: ALT5: GPIO3_IO02 ALT6: ALT7: SRC_BOOT_ CFG02		
W1	GND	-	-	
W2	GND	-	-	
W3	ENET_MDC	ALT0: MLB_DATA ALT1: ENET_MDC ALT2: ESAI_TX5_RX0 ALT3: ALT4: ENET_1588_ EVENT1_IN ALT5: GPIO1_IO31 ALT6: ALT7:	NVCC_ENET	
W4	RGMII_TX_CTL	ALT0: USB_H2_STROBE ALT1: RGMII_TX_CTL ALT2: ALT3: ALT4: ALT5: GPIO6_IO26 ALT6: ALT7: ENET_REF_CLK	NVCC_RGMII	
W5	GND	-	-	
W6	DISP0_DAT20	ALT0: IPU1_DISP0_ DATA20 ALT1: IPU2_DISP0_ DATA20 ALT2: ECSPI1_SCLK ALT3: AUD4_TXC ALT4: ALT5: GPIO5_IO14 ALT6: ALT7:	NVCC_LCD	
W7	DISP0_DAT15	ALT0: IPU1_DISP0_ DATA15 ALT1: IPU2_DISP0_ DATA15 ALT2: ECSPI1_SS1 ALT3: ECSPI2_SS1 ALT4: ALT5: GPIO5_IO09 ALT6: ALT7:	NVCC_LCD	

LGA pad	Pad name	Multiplexing	Power group	Comments
W8	DISP0_DAT13	ALT0: IPU1_DISP0_DATA13 ALT1: IPU2_DISP0_DATA13 ALT2: ALT3: AUD5_RXFS ALT4: ALT5: GPIO5_IO07 ALT6: ALT7:	NVCC_LCD	
W9	GND	-	-	
W10	DI0_PIN2	ALT0: IPU1_DI0_PIN02 ALT1: IPU2_DI0_PIN02 ALT2: AUD6_TXD ALT3: ALT4: ALT5: GPIO4_IO18 ALT6: ALT7:	NVCC_LCD	
W11	VSYS	-	-	
W12	VSYS	-	-	
W13	PMIC_PWR_EN	-	-	PMIC
W14	GND	-	-	
W15	EIM_RW	ALT0: EIM_RW ALT1: IPU1_DI1_PIN08 ALT2: ECSPI2_SS0 ALT3: ALT4: ALT5: GPIO2_IO26 ALT6: ALT7: SRC_BOOT_CFG29	NVCC_EIM	
W16	EIM_D29	ALT0: EIM_DATA29 ALT1: IPU1_DI1_PIN15 ALT2: ECSPI4_SS0 ALT3: ALT4: UART2_RTS_B ALT5: GPIO3_IO29 ALT6: IPU2_CSI1_VSYNC ALT7: IPU1_DI0_PIN14	NVCC_EIM	
W17	GND	-	-	
W18	EIM_A25	ALT0: EIM_ADDR25 ALT1: ECSPI4_SS1 ALT2: ECSPI2_RDY	NVCC_EIM	

LGA pad	Pad name	Multiplexing	Power group	Comments
		ALT3: IPU1_DI1_PIN12 ALT4: IPU1_DI0_D1_CS ALT5: GPIO5_IO02 ALT6: HDMI_TX_CEC_LINE ALT7:		
W19	EIM_D20	ALT0: EIM_DATA20 ALT1: ECSPI4_SS0 ALT2: IPU1_DI0_PIN16 ALT3: IPU2_CSI1_DATA15 ALT4: UART1_RTS_B ALT5: GPIO3_IO20 ALT6: EPIT2_OUT ALT7:	NVCC_EIM	
W20	EIM_D24	ALT0: EIM_DATA24 ALT1: ECSPI4_SS2 ALT2: UART3_TX_DATA ALT3: ECSPI1_SS2 ALT4: ECSPI2_SS2 ALT5: GPIO3_IO24 ALT6: AUD5_RXFS ALT7: UART1_DTR_B	NVCC_EIM	
W21	EIM_DA14	ALT0: EIM_DA14 ALT1: IPU1_DI1_D1_CS ALT2: ALT3: ALT4: ALT5: GPIO3_IO14 ALT6: ALT7: SRC_BOOT_CFG14	NVCC_EIM	10K pull-up to NVCC_EIM on module.
W22	EIM_DA8	ALT0: EIM_DA8 ALT1: IPU1_DISP1_DATA01 ALT2: IPU2_CSI1_DATA01 ALT3: ALT4: ALT5: GPIO3_IO08 ALT6: ALT7: SRC_BOOT_CFG08	NVCC_EIM	
W23	EIM_DA1	ALT0: EIM_DA1 ALT1: IPU1_DISP1_DATA08 ALT2: IPU2_CSI1_	NVCC_EIM	

LGA pad	Pad name	Multiplexing	Power group	Comments
		DATA08 ALT3: ALT4: ALT5: GPIO3_IO01 ALT6: ALT7: SRC_BOOT_CFG01		
W24	EIM_DA4	ALT0: EIM_DA4 ALT1: IPU1_DISP1_DATA05 ALT2: IPU2_CSI1_DATA05 ALT3: ALT4: ALT5: GPIO3_IO04 ALT6: ALT7: SRC_BOOT_CFG04	NVCC_EIM	10K pull-down on module.
Y1	ENET_REF_CLK	ALT0: ALT1: ENET_TX_CLK ALT2: ESAI_RX_FS ALT3: ALT4: ALT5: GPIO1_IO23 ALT6: SPDIF_SR_CLK ALT7:	NVCC_ENET	
Y2	ENET_RXD0	ALT0: ALT1: ENET_RX_DATA0 ALT2: ESAI_TX_HF_CLK ALT3: SPDIF_OUT ALT4: ALT5: GPIO1_IO27 ALT6: ALT7:	NVCC_ENET	
Y3	ENET_MDIO	ALT0: ALT1: ENET_MDIO ALT2: ESAI_RX_CLK ALT3: ALT4: ENET_1588_EVENT1_OUT ALT5: GPIO1_IO22 ALT6: SPDIF_LOCK ALT7:	NVCC_ENET	
Y4	GND	-	-	
Y5	RGMII_TD2	ALT0: HSI_RX_DATA ALT1: RGMII_TD2 ALT2:	NVCC_RGMII	

LGA pad	Pad name	Multiplexing	Power group	Comments
		ALT3: ALT4: ALT5: GPIO6_IO22 ALT6: ALT7:		
Y6	DISP0_DAT19	ALT0: IPU1_DISP0_DATA19 ALT1: IPU2_DISP0_DATA19 ALT2: ECSPI2_SCLK ALT3: AUD5_RXD ALT4: AUD4_RXC ALT5: GPIO5_IO13 ALT6: ALT7: EIM_CS3	NVCC_LCD	
Y7	DISP0_DAT11	ALT0: IPU1_DISP0_DATA11 ALT1: IPU2_DISP0_DATA11 ALT2: ALT3: ALT4: ALT5: GPIO5_IO05 ALT6: ALT7:	NVCC_LCD	
Y8	DISP0_DAT10	ALT0: IPU1_DISP0_DATA10 ALT1: IPU2_DISP0_DATA10 ALT2: ALT3: ALT4: ALT5: GPIO4_IO31 ALT6: ALT7:	NVCC_LCD	
Y9	NVCC_LCD	-	-	
Y10	PMIC_GPIO14	-	-	
Y11	GND	-	-	
Y12	GND	-	-	
Y13	NVCC_EIM	-	-	
Y14	EIM_EB0	ALT0: EIM_EB0 ALT1: IPU1_DISP1_DATA11 ALT2: IPU2_CSI1_DATA11	NVCC_EIM	

LGA pad	Pad name	Multiplexing	Power group	Comments
		ALT3: ALT4: CCM_PMIC_ READY ALT5: GPIO2_IO28 ALT6: ALT7: SRC_BOOT_ CFG27		
Y15	EIM_D30	ALT0: EIM_DATA30 ALT1: IPU1_DISP1_ DATA21 ALT2: IPU1_DI0_PIN11 ALT3: IPU1_CSI0_ DATA03 ALT4: UART3_CTS_B ALT5: GPIO3_IO30 ALT6: USB_H1_OC ALT7:	NVCC_EIM	
Y16	EIM_D21	ALT0: EIM_DATA21 ALT1: ECSPI4_SCLK ALT2: IPU1_DI0_PIN17 ALT3: IPU2_CSI1_ DATA11 ALT4: USB_OTG_OC ALT5: GPIO3_IO21 ALT6: I2C1_SCL ALT7: SPDIF_IN	NVCC_EIM	
Y17	EIM_D19	ALT0: EIM_DATA19 ALT1: ECSPI1_SS1 ALT2: IPU1_DI0_PIN08 ALT3: IPU2_CSI1_ DATA16 ALT4: UART1_CTS_B ALT5: GPIO3_IO19 ALT6: EPIT1_OUT ALT7:	NVCC_EIM	
Y18	EIM_D22	ALT0: EIM_DATA22 ALT1: ECSPI4_MISO ALT2: IPU1_DI0_PIN01 ALT3: IPU2_CSI1_ DATA10 ALT4: USB_OTG_PWR ALT5: GPIO3_IO22 ALT6: SPDIF_OUT ALT7:	NVCC_EIM	
Y19	GND	-	-	
Y20	EIM_DA15	ALT0: EIM_DA15 ALT1: IPU1_DI1_PIN01	NVCC_EIM	

LGA pad	Pad name	Multiplexing	Power group	Comments
		ALT2: IPU1_DI1_PIN04 ALT3: ALT4: ALT5: GPIO3_IO15 ALT6: ALT7: SRC_BOOT_CFG15		
Y21	EIM_DA7	ALT0: EIM_DA7 ALT1: IPU1_DISP1_DATA02 ALT2: IPU2_CSI1_DATA02 ALT3: ALT4: ALT5: GPIO3_IO07 ALT6: ALT7: SRC_BOOT_CFG07	NVCC_EIM	10K pull-down on module.
Y22	MCA_IO27	ALT0: ADC0_SE2 ALT1: PTE18 ALT2: SPI0_MOSI ALT3: - ALT4: I2C0_SDA ALT5: SPI0_MISO ALT6: - ALT7: -	LDO3_MCA	Signal only available in variants carrying the MCA.
Y23	MCA_IO23	ALT0: CMP0_IN5/ADC0_SE4b ALT1: PTE29 ALT2: - ALT3: TPM0_CH2 ALT4: TPM_CLKIN0 ALT5: - ALT6: - ALT7: -	LDO3_MCA	Signal only available in variants carrying the MCA.
Y24	EIM_EB2	ALT0: EIM_EB2 ALT1: ECSPI1_SS0 ALT2: ALT3: IPU2_CSI1_DATA19 ALT4: HDMI_TX_DDC_SCL ALT5: GPIO2_IO30 ALT6: I2C2_SCL ALT7: SRC_BOOT_CFG30	NVCC_EIM	
AA2	ENET_RXD1	ALT0: MLB_SIG	NVCC_ENET	

LGA pad	Pad name	Multiplexing	Power group	Comments
		ALT1: ENET_RX_DATA1 ALT2: ESAI_TX_FS ALT3: ALT4: ENET_1588_EVENT3_OUT ALT5: GPIO1_IO26 ALT6: ALT7:		
AA3	ENET_TX_EN	ALT0: ALT1: ENET_TX_EN ALT2: ESAI_TX3_RX2 ALT3: ALT4: ALT5: GPIO1_IO28 ALT6: ALT7:	NVCC_ENET	
AA4	RGMII_RD0	ALT0: HSI_RX_READY ALT1: RGMII_RD0 ALT2: ALT3: ALT4: ALT5: GPIO6_IO25 ALT6: ALT7:	NVCC_RGMII	
AA5	RGMII_TD3	ALT0: HSI_RX_WAKE ALT1: RGMII_TD3 ALT2: ALT3: ALT4: ALT5: GPIO6_IO23 ALT6: ALT7:	NVCC_RGMII	
AA6	DISP0_DAT23	ALT0: IPU1_DISP0_DATA23 ALT1: IPU2_DISP0_DATA23 ALT2: ECSPI1_SS0 ALT3: AUD4_RXD ALT4: ALT5: GPIO5_IO17 ALT6: ALT7:	NVCC_LCD	
AA7	DISP0_DAT12	ALT0: IPU1_DISP0_DATA12 ALT1: IPU2_DISP0_DATA12 ALT2: ALT3:	NVCC_LCD	

LGA pad	Pad name	Multiplexing	Power group	Comments
		ALT4: ALT5: GPIO5_IO06 ALT6: ALT7:		
AA8	DISP0_DAT8	ALT0: IPU1_DISP0_ DATA08 ALT1: IPU2_DISP0_ DATA08 ALT2: PWM1_OUT ALT3: WDOG1_B ALT4: ALT5: GPIO4_IO29 ALT6: ALT7:	NVCC_LCD	
AA9	DISP0_DAT4	ALT0: IPU1_DISP0_ DATA04 ALT1: IPU2_DISP0_ DATA04 ALT2: ECSPI3_SS1 ALT3: ALT4: ALT5: GPIO4_IO25 ALT6: ALT7:	NVCC_LCD	
AA10	VLDO6	-	-	
AA11	VLDO2	-	-	
AA12	VGEN_3V3	-	-	
AA13	EIM_WAIT	ALT0: EIM_WAIT ALT1: EIM_DTACK_B ALT2: ALT3: ALT4: ALT5: GPIO5_IO00 ALT6: ALT7: SRC_BOOT_ CFG25	NVCC_EIM	
AA14	EIM_A23	ALT0: EIM_ADDR23 ALT1: IPU1_DISP1_ DATA18 ALT2: IPU2_CSI1_ DATA18 ALT3: IPU2_SISG3 ALT4: IPU1_SISG3 ALT5: GPIO6_IO06 ALT6: ALT7: SRC_BOOT_	NVCC_EIM	

LGA pad	Pad name	Multiplexing	Power group	Comments
		CFG23		
AA15	EIM_D31	ALT0: EIM_DATA31 ALT1: IPU1_DISP1_DATA20 ALT2: IPU1_DI0_PIN12 ALT3: IPU1_CSI0_DATA02 ALT4: UART3_RTS_B ALT5: GPIO3_IO31 ALT6: USB_H1_PWR ALT7:	NVCC_EIM	
AA16	GND	-	-	
AA17	EIM_D25	ALT0: EIM_DATA25 ALT1: ECSPI4_SS3 ALT2: UART3_RX_DATA ALT3: ECSPI1_SS3 ALT4: ECSPI2_SS3 ALT5: GPIO3_IO25 ALT6: AUD5_RXC ALT7: UART1_DSR_B	NVCC_EIM	
AA18	EIM_EB3	ALT0: EIM_EB3 ALT1: ECSPI4_RDY ALT2: UART3_RTS_B ALT3: UART1_RI_B ALT4: IPU2_CSI1_HSYNC ALT5: GPIO2_IO31 ALT6: IPU1_DI1_PIN03 ALT7: SRC_BOOT_CFG31	NVCC_EIM	Make sure this line is not pulled-high during boot.
AA19	EIM_DA5	ALT0: EIM_DA5 ALT1: IPU1_DISP1_DATA04 ALT2: IPU2_CSI1_DATA04 ALT3: ALT4: ALT5: GPIO3_IO05 ALT6: ALT7: SRC_BOOT_CFG05	NVCC_EIM	10K pull-up to NVCC_EIM on module.
AA20	MCA_IO21	ALT0: - ALT1: PTD7 ALT2: SPI1_MISO ALT3: UART0_TX ALT4: - ALT5: SPI1_MOSI ALT6: -	LDO3_MCA	Signal only available in variants carrying the MCA.

LGA pad	Pad name	Multiplexing	Power group	Comments
		ALT7: -		
AA21	MCA_IO26	ALT0: - ALT1: PTA4 ALT2: I2C1_SDA ALT3: TPM0_CH1 ALT4: - ALT5: - ALT6: - ALT7: NMI_b	LDO3_MCA	Signal only available in variants carrying the MCA.
AA22	MCA_IO25	ALT0: - ALT1: PTA1 ALT2: UART0_RX ALT3: TPM2_CH0 ALT4: - ALT5: - ALT6: - ALT7: -	LDO3_MCA	Signal only available in variants carrying the MCA.
AA23	MCA_IO6/PMIC_GP_FB2	ALT0: - ALT1: PTA2 ALT2: UART0_TX ALT3: TPM2_CH1 ALT4: - ALT5: - ALT6: - ALT7: -	LDO3_MCA	Signal only available in variants carrying the MCA.
AB3	RGMII_RD1	ALT0: HSI_TX_FLAG ALT1: RGMII_RD1 ALT2: ALT3: ALT4: ALT5: GPIO6_IO27 ALT6: ALT7:	NVCC_RGMII	
AB4	GND	-	-	
AB5	DISP0_DAT17	ALT0: IPU1_DISP0_DATA17 ALT1: IPU2_DISP0_DATA17 ALT2: ECSPI2_MISO ALT3: AUD5_TXD ALT4: SDMA_EXT_EVENT1 ALT5: GPIO5_IO11 ALT6: ALT7:	NVCC_LCD	
AB6	DISP0_DAT9	ALT0: IPU1_DISP0_	NVCC_LCD	

LGA pad	Pad name	Multiplexing	Power group	Comments
		DATA09 ALT1: IPU2_DISP0_DATA09 ALT2: PWM2_OUT ALT3: WDOG2_B ALT4: ALT5: GPIO4_IO30 ALT6: ALT7:		
AB7	DISP0_DAT6	ALT0: IPU1_DISP0_DATA06 ALT1: IPU2_DISP0_DATA06 ALT2: ECSPI3_SS3 ALT3: AUD6_RXC ALT4: ALT5: GPIO4_IO27 ALT6: ALT7:	NVCC_LCD	
AB8	DISP0_DAT3	ALT0: IPU1_DISP0_DATA03 ALT1: IPU2_DISP0_DATA03 ALT2: ECSPI3_SS0 ALT3: ALT4: ALT5: GPIO4_IO24 ALT6: ALT7:	NVCC_LCD	
AB9	PMIC_GPIO7	-	-	PMIC line.
AB10	GND	-	-	
AB11	VDD_WLAN_SD1	-	-	Output power rail.
AB12	EIM_BCLK	ALT0: EIM_BCLK ALT1: IPU1_DI1_PIN16 ALT2: ALT3: ALT4: ALT5: GPIO6_IO31 ALT6: ALT7:	NVCC_EIM	
AB13	EIM_CS0	ALT0: EIM_CS0 ALT1: IPU1_DI1_PIN05 ALT2: ECSPI2_SCLK ALT3: ALT4: ALT5: GPIO2_IO23	NVCC_EIM	

LGA pad	Pad name	Multiplexing	Power group	Comments
		ALT6: ALT7:		
AB14	PMIC_ADCIN1/ GPIO0	-	-	PMIC line.
AB15	EIM_A18	ALT0: EIM_ADDR18 ALT1: IPU1_DISP1_ DATA13 ALT2: IPU2_CSI1_ DATA13 ALT3: ALT4: ALT5: GPIO2_IO20 ALT6: ALT7: SRC_BOOT_ CFG18	NVCC_EIM	Make sure this line is not pulled-high during boot.
AB16	EIM_A20	ALT0: EIM_ADDR20 ALT1: IPU1_DISP1_ DATA15 ALT2: IPU2_CSI1_ DATA15 ALT3: ALT4: ALT5: GPIO2_IO18 ALT6: ALT7: SRC_BOOT_ CFG20	NVCC_EIM	Make sure this line is not pulled-high during boot.
AB17	EIM_D28	ALT0: EIM_DATA28 ALT1: I2C1_SDA ALT2: ECSPI4_MOSI ALT3: IPU2_CSI1_ DATA12 ALT4: UART2_CTS_B ALT5: GPIO3_IO28 ALT6: IPU1_EXT_TRIG ALT7: IPU1_DI0_PIN13	NVCC_EIM	
AB18	EIM_D18	ALT0: EIM_DATA18 ALT1: ECSPI1_MOSI ALT2: IPU1_DI0_PIN07 ALT3: IPU2_CSI1_ DATA17 ALT4: IPU1_DI1_D0_CS ALT5: GPIO3_IO18 ALT6: I2C3_SDA ALT7:	NVCC_EIM	
AB19	PMIC_PWR1_EN	-	-	
AB20	#PMIC_VDD_	-	-	

LGA pad	Pad name	Multiplexing	Power group	Comments
	FAULT			
AB21	GND	-	-	
AB22	#PMIC_OFF	-	-	
AC4	RGMII_RD2	ALT0: HSI_TX_DATA ALT1: RGMII_RD2 ALT2: ALT3: ALT4: ALT5: GPIO6_IO28 ALT6: ALT7:	NVCC_RGMII	
AC5	RGMII_RD3	ALT0: HSI_TX_WAKE ALT1: RGMII_RD3 ALT2: ALT3: ALT4: ALT5: GPIO6_IO29 ALT6: ALT7:	NVCC_RGMII	
AC6	DISP0_DAT14	ALT0: IPU1_DISP0_DATA14 ALT1: IPU2_DISP0_DATA14 ALT2: ALT3: AUD5_RXC ALT4: ALT5: GPIO5_IO08 ALT6: ALT7:	NVCC_LCD	
AC7	DISP0_DAT7	ALT0: IPU1_DISP0_DATA07 ALT1: IPU2_DISP0_DATA07 ALT2: ECSPI3_RDY ALT3: ALT4: ALT5: GPIO4_IO28 ALT6: ALT7:	NVCC_LCD	
AC8	DISP0_DAT0	ALT0: IPU1_DISP0_DATA00 ALT1: IPU2_DISP0_DATA00 ALT2: ECSPI3_SCLK ALT3: ALT4:	NVCC_LCD	

LGA pad	Pad name	Multiplexing	Power group	Comments
		ALT5: GPIO4_IO21 ALT6: ALT7:		
AC9	DISP0_DAT1	ALT0: IPU1_DISP0_ DATA01 ALT1: IPU2_DISP0_ DATA01 ALT2: ECSPI3_MOSI ALT3: ALT4: ALT5: GPIO4_IO22 ALT6: ALT7:	NVCC_LCD	
AC10	MCA_VREFH	VREFH	-	A 100 nF capacitor connected to GND is placed close to this pin on ConnectCore 6 Plus SOM. Signal only available in variants carrying the MCA.
AC11	VDD_SD2	-	-	
AC12	GND	-	-	
AC13	GND	-	-	
AC14	PMIC_ADCIN2/ GPIO1	-	-	PMIC line.
AC15	EIM_CS1	ALT0: EIM_CS1 ALT1: IPU1_DI1_PIN06 ALT2: ECSPI2_MOSI ALT3: ALT4: ALT5: GPIO2_IO24 ALT6: ALT7:	NVCC_EIM	
AC16	EIM_A21	ALT0: EIM_ADDR21 ALT1: IPU1_DISP1_ DATA16 ALT2: IPU2_CSI1_ DATA16 ALT3: ALT4: ALT5: GPIO2_IO17 ALT6: ALT7: SRC_BOOT_ CFG21	NVCC_EIM	Make sure this line is not pulled-high during boot.

LGA pad	Pad name	Multiplexing	Power group	Comments
AC17	EIM_A17	ALT0: EIM_ADDR17 ALT1: IPU1_DISP1_DATA12 ALT2: IPU2_CSI1_DATA12 ALT3: ALT4: ALT5: GPIO2_IO21 ALT6: ALT7: SRC_BOOT_CFG17	NVCC_EIM	
AC18	GND	-	-	
AC19	EIM_A22	ALT0: EIM_ADDR22 ALT1: IPU1_DISP1_DATA17 ALT2: IPU2_CSI1_DATA17 ALT3: ALT4: ALT5: GPIO2_IO16 ALT6: ALT7: SRC_BOOT_CFG22	NVCC_EIM	
AC20	EIM_D23	ALT0: EIM_DATA23 ALT1: IPU1_DI0_D0_CS ALT2: UART3_CTS_B ALT3: UART1_DCD_B ALT4: IPU2_CSI1_DATA_EN ALT5: GPIO3_IO23 ALT6: IPU1_DI1_PIN02 ALT7: IPU1_DI1_PIN14	NVCC_EIM	
AC21	MCA_IO28	ALT0: - ALT1: PTE25 ALT2: - ALT3: TPM0_CH1 ALT4: - ALT5: I2C0_SDA ALT6: - ALT7: -	LDO3_MCA	Not used on the module. For K10 and K20 processors, this pin is VBAT. The ConnectCore 6 Plus SOM has an 0R resistor on this pin for connecting this signal to LDO3_MCA. By default, the resistor is not populated and MCA_IO28 is available on module pad.

LGA pad	Pad name	Multiplexing	Power group	Comments
				1x 100nF + 1x1µF capacitors connected to GND are placed close to this pin on the ConnectCore 6 Plus SOM.
AD5	RGMII_RXC	ALT0: USB_H3_STROBE ALT1: RGMII_RXC ALT2: ALT3: ALT4: ALT5: GPIO6_IO30 ALT6: ALT7:	NVCC_RGMII	
AD6	DISP0_DAT18	ALT0: IPU1_DISP0_DATA18 ALT1: IPU2_DISP0_DATA18 ALT2: ECSPI2_SS0 ALT3: AUD5_TXFS ALT4: AUD4_RXFS ALT5: GPIO5_IO12 ALT6: ALT7: EIM_CS2	NVCC_LCD	
AD7	DISP0_DAT5	ALT0: IPU1_DISP0_DATA05 ALT1: IPU2_DISP0_DATA05 ALT2: ECSPI3_SS2 ALT3: AUD6_RXFS ALT4: ALT5: GPIO4_IO26 ALT6: ALT7:	NVCC_LCD	
AD8	DI0_PIN4	ALT0: IPU1_DI0_PIN04 ALT1: IPU2_DI0_PIN04 ALT2: AUD6_RXD ALT3: SD1_WP ALT4: ALT5: GPIO4_IO20 ALT6: ALT7:	NVCC_LCD	
AD9	DISP0_DAT2	ALT0: IPU1_DISP0_DATA02 ALT1: IPU2_DISP0_DATA02	NVCC_LCD	

LGA pad	Pad name	Multiplexing	Power group	Comments
		ALT2: ECSPI3_MISO ALT3: ALT4: ALT5: GPIO4_IO23 ALT6: ALT7:		
AD10	VLDO4	-	-	
AD11	VLDO8	-	-	
AD12	PMIC_GP_FB3	-	-	PMIC
AD13	PMIC_GP_FB1/ GPIO13	-	-	PMIC
AD14	PMIC_ADCIN3/ GPIO2	-	-	PMIC
AD15	EIM_A16	ALT0: EIM_ADDR16 ALT1: IPU1_DI1_DISP_ CLK ALT2: IPU2_CSI1_ PIXCLK ALT3: ALT4: ALT5: GPIO2_IO22 ALT6: ALT7: SRC_BOOT_ CFG16	NVCC_EIM	
AD16	EIM_A19	ALT0: EIM_ADDR19 ALT1: IPU1_DISP1_ DATA14 ALT2: IPU2_CSI1_ DATA14 ALT3: ALT4: ALT5: GPIO2_IO19 ALT6: ALT7: SRC_BOOT_ CFG19	NVCC_EIM	
AD17	EIM_A24	ALT0: EIM_ADDR24 ALT1: IPU1_DISP1_ DATA19 ALT2: IPU2_CSI1_ DATA19 ALT3: IPU2_SISG2 ALT4: IPU1_SISG2 ALT5: GPIO5_IO04 ALT6: ALT7: SRC_BOOT_	NVCC_EIM	

LGA pad	Pad name	Multiplexing	Power group	Comments
		CFG24		
AD18	EIM_D27	ALT0: EIM_DATA27 ALT1: IPU1_DI1_PIN13 ALT2: IPU1_CSI0_DATA00 ALT3: IPU2_CSI1_DATA13 ALT4: UART2_RX_DATA ALT5: GPIO3_IO27 ALT6: IPU1_SISG3 ALT7: IPU1_DISP1_DATA23	NVCC_EIM	
AD19	EIM_D26	ALT0: EIM_DATA26 ALT1: IPU1_DI1_PIN11 ALT2: IPU1_CSI0_DATA01 ALT3: IPU2_CSI1_DATA14 ALT4: UART2_TX_DATA ALT5: GPIO3_IO26 ALT6: IPU1_SISG2 ALT7: IPU1_DISP1_DATA22	NVCC_EIM	
AD20	EIM_D16	ALT0: EIM_DATA16 ALT1: ECSPI1_SCLK ALT2: IPU1_DI0_PIN05 ALT3: IPU2_CSI1_DATA18 ALT4: HDMI_TX_DDC_SDA ALT5: GPIO3_IO16 ALT6: I2C2_SDA ALT7:	NVCC_EIM	

Note Electrical and timing characteristics of the processor (i.MX6QuadPlus), PMIC (DA9063), and MCA (MKL14Z32VFT4) can be found in the corresponding datasheets, which are publicly available from the manufacturer.

Pinout differences between ConnectCore 6 and ConnectCore 6 Plus

The following table lists the details of pinout differences between the ConnectCore 6 and the ConnectCore 6 Plus:

Pad	ConnectCore 6	ConnectCore 6 Plus	Comments
C18	Unconnected	PCM_IN	PCM bus coming from the wireless transceiver used on the ConnectCore 6 Plus.
D12	Unconnected	PCM_OUT	PCM bus coming from the wireless transceiver used on the ConnectCore 6 Plus.
E12	Unconnected	PCM_SYNC	PCM bus coming from the wireless transceiver used on the ConnectCore 6 Plus.
E13	Unconnected	PCM_CLK	PCM bus coming from the wireless transceiver used on the ConnectCore 6 Plus.
AA11	VGEN7_1V8	VGEN2_1V8	This 1.8V supply is generated by LDO7 on ConnectCore 6 and by LDO2 on ConnectCore 6 Plus. LDO2 was necessary on ConnectCore 6 for supplying portion of the wireless interface. This supply was not required with the new wireless solution used on ConnectCore 6 Plus and hence has been reassigned to generate 1.8V.
AB11	Unconnected	VDD_WLAN_ SDIO	VDD_WLAN_SDIO is generated by PMIC LDO10. This supply powers the SDIO interface going to the wireless transceiver. It powers the i.MX 6 Plus I/O bank and the I/O supply of the RF transceiver. On theConnectCore 6, no dedicated power supply has been used for powering the SDIO interface.
AC11	Unconnected	VDD_SDIO	VDD_SDIO is generated by PMIC LDO9. This supply is used on the module for powering SD2 interface. On ConnectCore 6, SD2 is connected to VGEN_3V3 and has no dedicated power supply.

Signal use limitations

The following signals available on ConnectCore 6 Plus pads have a limited usage:

- SD1_CLK (pad L21), SD1_CMD (pad J23), SD1_DAT[3:0] (pads L20, J21, J22 and N24) are used internally by the wireless, so they can't be used externally.
- SD3_DAT4/BT_UART_RXD (pad C22), SD3_DAT5/BT_UART_TXD (pad D23), SD3_CLK/BT_UART_ RTS (B21), SD3_CMD/BT_UART_CTS (pad E23) are used internally by the Bluetooth, so they can't be used externally.
- I2C2_SCL/KEY_COL3 (pad C3) and I2C2_SDA/KEY_ROW3 (pad F2) are used internally in the module for interconnecting the CPU with the PMIC, the MCA, and the cryptochip. Using these signals externally should be done with caution, since it could prevent the module from working properly. It is recommended that you use another I2C port for connecting external devices to the ConnectCore 6 Plus module in order to avoid excessive bus load.
- NANDF_CS1/#MCA_INT (pad H21), CSI0_DAT11/ECSPI2_SS0 (pad A6), CSI0_DAT8/ECSPI2_SCLK (pad D6), CSI0_DAT10/ECSPI2_MISO (pad K5) and CSI0_DAT9/ECSPI2_MOSI (pad D5) are connected to MCA processor. #MCA_INT is a signal reserved as interrupt between the MCA

processor and the i.MX6QP processor. The other signals are an SPI bus shared between thei.MX6QP and MCA processors. The usage and availability of these signals depends on the firmware running in the MCA processor.

- ON/OFF (pad D18) signal is connected to PMIC and MCA.
- #POR (pad E18) is connected to PMIC and i.MX6QP processor.

Specifications for the ConnectCore 6 Plus

Electrical characteristics 86
Power consumption 86
Environmental specifications 87

Electrical characteristics

Voltage supplies

Parameter	Min	Typ	Max	Unit
5 V supply	4.2	5	5.5	V
VCC_LICELL	2.0	3.0	TBD	V
LDO3_MCA	1.71	3.3	3.6	V

Note No specific ESD protection components have been implemented on the ConnectCore 6 Plus module. ESD protection level on the module's I/Os is the same as what is specified in the NXP datasheet. Any required ESD protection must be implemented on the carrier board.

Power consumption

This section contains power consumption data. The power is measured at the input of the SOM, i.e. VSYS input power rail. The power architecture of the SOM requires some of the PMIC regulators to be externally powered. These regulators are powered directly from some of the outputs of the PMIC itself (which are fed from VSYS).

No external circuitry is powered from any of the output power rails of the SOM, so that the power measured at VSYS corresponds to the consumption of the SOM alone.

Note These power consumption numbers should be considered guidelines only, never as fixed or absolute values. Actual values will depend entirely upon individual setup and system application.

Power consumption use cases

This section describes the use cases that were used to measure power consumption of the system-on-module.

- **Suspend** System in suspend-to-RAM mode.
- **Power-off** System in power-off with RTC enabled. RTC is running in the PMIC.
- **IDLE** System up and running. Ethernet and wireless disabled.
- **Decoding video** System up and running with the following configuration:
  - Ethernet and wireless disabled.
  - HDMI display connected to the system.
  - CPU decoding 1080p video.
- **CPU stress** System up and running with the following configuration:
  - Ethernet and wireless disabled.
  - Hanoi application running.

Global power consumption

The following table lists the global power consumption of the ConnectCore 6 and ConnectCore 6 Plus system-on-module when the system is under the use cases described above:

Digi Embedded Yocto 2.4

Power consumption (mA @ 5 V)		
Use case	**ConnectCore 6**	**ConnectCore 6 Plus**
Suspend	144	151
Power-off	4.8	5.9
IDLE	380	460
Decoding video	577.94	610.6 (+150.6)
CPU stress	1210	1090 (+630)

Digi Embedded Yocto 2.2

Power consumption (mA @ 5 V)		
Use case	**ConnectCore 6**	**ConnectCore 6 Plus**
Suspend	146	150
Power-off	4.8	6.2
IDLE	380	450
Decoding video	582	623 (+162)
CPU stress	1260	1120 (+659)

Environmental specifications

The i.MX6QP thermal specification is based on maximum junction temperature (Tj) of the specific application processor variant used. In order to support thermal management assistance through software, the i.MX6QP processor has a built-in junction temperature sensor/monitor.

The table below outlines the three temperature-related operational threshold modes with severity related recovery actions as defined in software.

Mode	Temperature (Tj)	Recovery action
Critical	> Max Tj - 5°C	Automatic system reboot to protect i.MX6QP from damage
Hot	> Max Tj - 15°C	i.MX6QP core and GPU frequencies are reduced Additional actions may be initiated depending on actual system implementation
Active	< Max Tj - 25°C	Limitations applied in Hot mode are removed again

Linux - Android users

You can measure the processor junction temperature by entering the following shell command:

```
cat /sys/class/thermal/thermal_zone0/temp
```

Note Depending on the operating system, the junction temperature is displayed in milli °C or °C.

The ConnectCore 6 Plus multichip module was designed to provide customers with unique options to simplify and support the implementation of thermal management approaches in their designs, as needed:

- The ConnectCore 6 Plus offers a fully shielded design (including internal thermal compounds) with optimized heat transfer and heat spreading for specific internal components (processor and PMIC). It is ideally suited for more efficient heat dissipation by providing a single, uniform surface for thermal management via enclosures, heat sinks or other means.
- The surface mount design of the ConnectCore 6 Plus allows for additional dissipation of heat through the carrier board it is mounted on.

  Evaluation of the ConnectCore 6 Plus thermal performance has successfully demonstrated that the ambient operating temperatures specified can be supported by the module. However, actual ambient operating temperature performance may vary and is highly dependent on the specific use-case, such as enclosure design, system design, i.MX6QP processor variant, GPU/VPU activity, and on-module peripherals used. Your specific system design and application may require additional thermal management such as passive (heatsink/-spreader) or active (airflow) cooling at elevated temperatures.

ConnectCore 6 Plus variant	Ambient operating temperature	Storage temperature
Industrial	-40 to 85° C[1]	-40 to 125° C
Commercial	0 to 70° C	-40 to 125° C

CAUTION! [1] Your final product may require additional thermal management such as passive (heatsink/spreader) or active (airflow) cooling to achieve the maximum operating temperature without exceeding the processor junction temp limit.

Contact Digi if you need information and/or guidance related to thermal management in your specific application.

Assembly instructions

Moisture sensitivity and shelf life 90
Mounting 90
Coplanarity 90
Solder paste print 90
Stencil 90
SMT pick and place 91
SMT process parameter reference 91
Reflow profile 91

Moisture sensitivity and shelf life

The ConnectCore 6 Plus module is classified as a Level 3 Moisture Sensitive Device in accordance with IPC/JEDEC J-STD-020.

1. Calculated shelf life in sealed packaging: 12 months at <40°C and <90% relative humidity (RH).
2. Environmental condition during production: 30°C / 60% RH according to IPC/JEDEC J-STD-033C paragraph 5.
3. After module is removed from sealed packaging, modules that will be subjected to reflow solder temperatures are required to be:
   a. Mounted within 168 hours
   b. Stored per J-STD-033
4. Baking is required, before mounting if:
   a. the packaging humidity indicator indicates 10% RH or higher.
   b. either 3a or 3b are not met
5. If baking is required, bake modules in trays for 4-6 hours at 125°C; maximum stacking height is 10 trays.

Mounting

The ConnectCore 6 Plus module has been designed with easy integration into existing SMT processes in mind.This section contains guidance for mounting the module on your carrier board.

Modules are not sealed and therefore they should not be subjected to a wash cycle or similar treatment where condensation could occur. Contact Digi International for guidance to discuss conformal coating approaches and options, if needed.

Coplanarity

The coplanarity measured is <0.003" bow and twist (98% confidence interval). It is important that the carrier board is also coplanar. It is recommended that the assembly be supported during the reflow process with a fixture to minimize the potential bow of the carrier card.

Solder paste print

The following solder paste type has been approved for mounting the module on a carrier board:

- SAC305 No-Clean solder paste (Lead-free: Alpha OM-340 Type 4 or equivalent)

The following solder paste printing parameters are recommended:

- Stencil thickness: 0.125 mm/5 mil
- Stencil diameter: One to one of pad diameter (to +20% of pad)
- Paste alignment: 20% off the pad max (offset <20% pad diameter)

Stencil

The recommendation is to use a laser cut and/or electro-formed stencil. Based on the actual coplanarity characteristics of your carrier board, adjustments may be required to determine the optimal solder paste volume.

SMT pick and place

- Placement nozzle: Largest available on the machine
- Nozzle pick surface: Center of shield
- Placement speed: Slowest speed for the machine
- Placement alignment: 10% of pad diameter (compensating for module weight and supporting alignment). The module should be placed last as part of the assembly/mounting process to eliminate unexpected shifting.

SMT process parameter reference

Process	SMT process	Specification recommendations
Screen print	Solder paste	SAC305 No-Clean (Alpha OM-340 or equivalent)
	Stencil thickness	0.15 mm / 5 mil
	Stencil diameter	1.47 mm / 58mil
	Paste alignment	20% maximum off center of the pad
PnP	Placement nozzle	Largest available on machine
	Nozzle pick surface	Shield center
	Speed	Slowest possible with PnP machine
	Placement sequence	Last, if possible
	Placement alignment	10% maximum off center of pad
Reflow	See the SMT profile recommendation	

Reflow profile

Digi recommends the following:

- SoM temperature below 238°C during reflow cycle.
- Time Above Liquidus (TAL) between 55 and 65 seconds.
- Use of 40AWG K-type thermal couple and M.O.L.E. or equivalent thermal profiler.

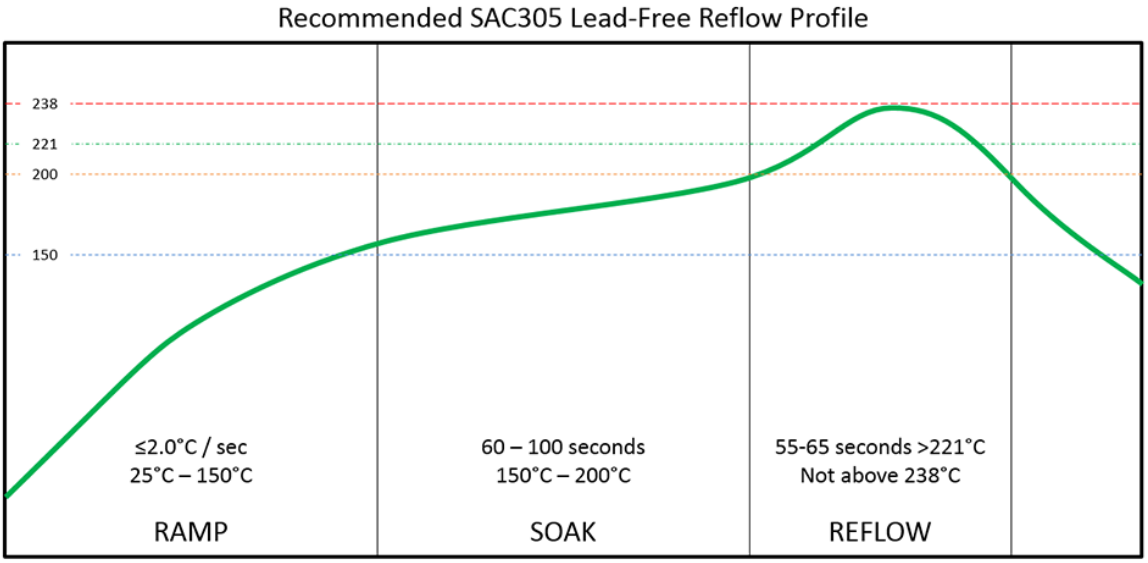

Recommended reflow profile only - 10 heating zone convection reflow oven
Modifications to profile may be required to fit specific equipment, application, process or design

Digi recommends you use two (2) thermocouple locations to achieve proper attachment of SoM:

- Attach thermocouple to bottom of SoM located in the center of the cutout with the thermocouple touching the SoM.
- Drill hole through bottom of carrier PCB near corner of SoM deep enough to reach SoM.
- Insert thermocouple into hole touching SoM and secure.

Digi recommends X-ray analysis after reflow to confirm proper mounting and solder reflow.

The ConnectCore 6 Plus is approved to withstand a total of four (4) reflow cycles. Two (2) reflow cycles are required for manufacturing the ConnectCore 6 Plus module. Two (2) reflow cycles are remaining for mounting the module on the carrier board. Digi strongly recommends soldering the ConnectCore 6 Plus module during the last reflow cycles of the carrier board manufacturing process.

Regulatory information and certifications

United States FCC 94
Canada (ISED) 97
Europe ETSI and UKCA 98
Bluetooth SIG-qualified hardware and firmware 102
Japan 103

United States FCC

The ConnectCore 6 Plus module complies with Part 15 of the FCC rules and regulations. Compliance with the labeling requirements, FCC notices and antenna usage guidelines is required. To fulfill FCC Certification, the OEM must comply with the following regulations:

The system integrator must ensure that the text on top side of the module is placed on the outside of the final product.

ConnectCore 6 Plus module may only be used with antennas approved (see FCC-approved antennas).

Labeling requirements

WARNING! The Original Equipment Manufacturer (OEM) must ensure that FCC labeling requirements are met. This includes a clearly visible label on the outside of the final product enclosure that displays the contents shown below. Required FCC Label for OEM products containing the ConnectCore 6 Plus module.

Contains FCC ID: MCQ-CCIMX6P

This device complies with part 15 of the FCC Rules. Operation is subject to the following two conditions: (1) This device may not cause harmful interference, and (2) this device must accept any interference received, including interference that may cause undesired operation.

Maximum power and frequency specifications (FCC)

RF band	Peak antenna gain	Technology	Maximum transmit power at antenna connector	Frequencies
2.4 GHz	2.5 dBi	BT + EDR	8.8 mW (+9.5 dBm)	[BW 1 MHz] x 79 non-overlapping channels, # (center freq. MHz): * [2400 - 2483.5 MHz]: 0 (2402) to 78 (2480)
		Bluetooth LE	1.7 mW (+2.3 dBm)	[BW 2 MHz] x 40 non-overlapping channels, # (center freq. MHz): * [2400 - 2483.5 MHz]: 0 (2402) to 39 (2480)
		WLAN	66.7 mW (+18.2 dBm)	[BW 20 MHz] x 11 overlapping channels, # (center freq. MHz): * [2400 - 2473 MHz]: 1 (2412), 2 (2417), 3 (2422), 4 (2427), 5 (2432), 6 (2437),7 (2442), 8 (2447), 9 (2452), 10 (2457), 11 (2462)
				[BW 40 MHz] x 7 overlapping channels, # (center freq. MHz): * [2400 - 2473 MHz]: 3 (2422), 4 (2427), 5 (2432), 6 (2437),7 (2442), 8 (2447), 9 (2452)
5 GHz	4.6 dBi		21.3 mW (+13 dBm)	[BW 20 MHz] x 24 non-overlapping channels, # (center freq. MHz): * [5150 - 5250 MHz]: 36 (5180), 40 (5200), 44 (5220), 48 (5240) * [5250 - 5350 MHz]: 52 (5260), 56 (5280), 60 (5300), 64 (5320) * [5470 - 5725 MHz]: 100 (5500), 104 (5520), 108 (5540), 112 (5560), 116 (5580), 120 (5600),124 (5620), 128 (5640), 132 (5660), 136 (5680), 140 (5700) * [5725 - 5850 MHz]: 149 (5745), 153 (5765), 157 (5785), 161 (5805), 165 (5825)
				[BW 40 MHz] x 11 non-overlapping channels, # (center freq. MHz): * [5150 - 5250 MHz]: 38 (5190), 46 (5230) * [5250 - 5350 MHz]: 54 (5270), 62 (5310) * [5470 - 5725 MHz]: 102 (5510), 110 (5550), 118 (5590), 126 (5630), 134 (5670) * [5725 - 5850 MHz]: 151 (5755), 159 (5795)
				[BW 80 MHz] x 5 non-overlapping channels, # (center freq. MHz): * [5150 - 5250 MHz]: 42 (5210) * [5250 - 5350 MHz]: 58 (5290) * [5470 - 5725 MHz]: 106 (5530), 122 (5610) * [5725 - 5850 MHz]: 155 (5775)

FCC notices

IMPORTANT: The ConnectCore 6 Plus module has been certified by the FCC for use with other products without any further certification (as per FCC section 2.1091). Modifications not expressly approved by Digi could void the user's authority to operate the equipment.

IMPORTANT: OEMs must test final product to comply with unintentional radiators (FCC section 15.107 & 15.109) before declaring compliance of their final product to Part 15 of the FCC Rules.

IMPORTANT: The ConnectCore 6 Plus module has been certified for remote and base radio applications. If the module will be used for portable applications, the device must undergo SAR testing. This equipment has been tested and found to comply with the limits for a Class B digital device, pursuant to Part 15 of the FCC Rules. These limits are designed to provide reasonable protection against harmful interference in a residential installation. This equipment generates uses and can radiate radio frequency energy, and if not installed and used in accordance with the instructions, may cause harmful interference to radio communications. However, there is no guarantee that interference will not occur in a particular installation. If this equipment does cause harmful interference to radio or television reception, which can be determined by turning the equipment off and on, the user is encouraged to try to correct the interference by one or more of the following measures: Re-orient or relocate the receiving antenna, Increase the separation between the equipment and receiver, Connect equipment and receiver to outlets on different circuits, or Consult the dealer or an experienced radio/TV technician for help.

FCC-approved antennas

The ConnectCore 6 Plus can be installed utilizing antennas and cables constructed with non-standard connectors (RPSMA, RPTNC, and so on).

The modules are FCC approved for fixed base station and mobile applications for the channels indicated in the tables below. If the antenna is mounted at least 20 cm (8 in) from nearby persons, the application is considered a mobile application. Antennas not listed in the table must be tested to comply with FCC Section 15.203 (Unique Antenna Connectors) and Section 15.247 (Emissions).

The following table shows the antennas that were used to certify the ConnectCore 6 Plus wireless module. These antennas can be replaced by others; however, further certification testing is required. The number of tests to be carried out can be decreased by using an antenna of the same type, i.e. dualband omnidirectional dipole, showing lower peak gain. In such case, only a spot check may be required by the certification laboratories to keep current certifications valid according to FCC regulations. If replacing by an antenna with higher gain, e.g. >2.5 dBi at 2.4 GHz band, complete radiated tests according to FCC regulations are required by the certification laboratories.

Antenna used to certify the ConnectCore 6 Plus wireless module

Part number	Type (description)	Peak gain 2.4 GHz	Peak gain 5 GHz
Digi International A24-HASM-450	Dipole (articulated RPSMA, 2.4 GHz antenna)	1.8 dBi	
Linx Technologies Inc ANT-DB1-RAF-RPS	Dipole (articulated RPSMA, 2.4 GHz and 5 GHz antenna)	2.5 dBi	4.6 dBi
Ethertronics 1001932	2.4 - 5 GHz PCB antenna	1.5-2.5 dBi	3-5 dBi

YAGEO ANTX100P001B24003 has been tested, but is not approved with standard firmware provided with the module. Please contact Digi Technical Support to receive dedicated calibration files / firmware to support this antenna. These files are reducing 2.4GHz output power to compensate for the higher gain of the YAGEO antenna.

Note If using the RF module in a portable application (for example - if the module is used in a hand-held device and the antenna is less than 20 cm (8 in) from the human body when the device is in operation): The integrator is responsible for passing additional SAR (Specific Absorption Rate) testing based on FCC rules 2.1091 and FCC Guidelines for Human Exposure to Radio Frequency Electromagnetic Fields, OET Bulletin and Supplement C. The testing results will be submitted to the FCC for approval prior to selling the integrated unit. The required SAR testing measures emissions from the module and how they affect the person.

RF exposure

CAUTION! To satisfy FCC RF exposure requirements for mobile transmitting devices, a separation distance of 20 cm (8 in) or more should be maintained between the antenna of this device and persons during device operation. To ensure compliance, operations at closer than this distance are not recommended. The antenna used for this transmitter must not be co-located in conjunction with any other antenna or transmitter. The preceding statement must be included as a CAUTION statement in OEM product manuals in order to alert users of FCC RF Exposure compliance.

Canada (ISED)

This device complies with Industry Canada license-exempt RSS standard(s). Operation is subject to the following two conditions: (1) this device may not cause interference, and (2) this device must accept any interference, including interference that may cause undesired operation of the device.

Le présent appareil est conforme aux CNR d'Industrie Canada applicables aux appareils radio exempts de licence. L'exploitation est autorisée aux deux conditions suivantes : (1) l'appareil ne doit pas produire de brouillage, et (2) l'utilisateur de l'appareil doit accepter tout brouillage radioélectrique subi, même si le brouillage est susceptible d'en compromettre le fonctionnement.

Digi International Inc. has not approved any changes or modifications to this device by the user. Any changes or modifications could void the user’s authority to operate the equipment.

Digi International Inc. n’approuve aucune modification apportée à l’appareil par l’utilisateur, quelle qu’en soit la nature. Tout changement ou modification peuvent annuler le droit d’utilisation de l’appareil par l’utilisateur.

Maximum power and frequency specifications

Note See the table in United States FCC section, as the same channel plan and maximum transmit powers apply.

CAUTION! Due to the elimination of interference to the Terminal Doppler Weather Radar (TDWR), the operation of this device in the frequency range **5.60 – 5.65** GHz is restricted in Canada.

Labeling requirements

Labeling requirements for Industry Canada are similar to those of the FCC. A clearly visible label on the outside of the final product enclosure must display the following text:

Contains Model CC-WMX-KK8D-TN Radio, IC: 1846A-CCIMX6P

Transmitters with detachable antennas

This radio transmitter (IC: 1846A-CCIMX6P) has been approved by Industry Canada to operate with the antenna types listed in the table above with the maximum permissible gain and required antenna impedance for each antenna type indicated. Antenna types not included in this list, having a gain greater than the maximum gain indicated for that type, are strictly prohibited for use with this device.

Le présent émetteur radio (IC: 1846A-CCIMX6P) a été approuvé par Industrie Canada pour fonctionner avec les types d'antenne énumérés ci-dessous et ayant un gain admissible maximal et l'impédance requise pour chaque type d'antenne. Les types d'antenne non inclus dans cette liste, ou dont le gain est supérieur au gain maximal indiqué, sont strictement interdits pour l'exploitation de l'émetteur.

Under Industry Canada regulations, this radio transmitter may only operate using an antenna of a type and maximum (or lesser) gain approved for the transmitter by Industry Canada. To reduce potential radio interference to other users, the antenna type and its gain should be so chosen that the equivalent isotropically radiated power (e.i.r.p.) is not more than that necessary for successful communication.

Conformément à la réglementation d'Industrie Canada, le présent émetteur radio peut fonctionner avec une antenne d'un type et d'un gain maximal (ou inférieur) approuvé pour l'émetteur par Industrie Canada. Dans le but de réduire les risques de brouillage radioélectrique à l'intention des autres utilisateurs, il faut choisir le type d'antenne et son gain de sorte que la puissance isotrope rayonnée équivalente (p.i.r.e.) ne dépasse pas l'intensité nécessaire à l'établissement d'une communication satisfaisante.

Europe ETSI and UKCA

The ConnectCore 6 Plus module has been certified for use in several European countries. For a complete list, refer to www.digi.com.

If the ConnectCore 6 Plus module is incorporated into a product, the manufacturer must ensure compliance of the final product with articles 3.1a and 3.1b of the RE Directive (Radio Equipment Directive). A Declaration of Conformity must be issued for each of these standards and kept on file as described in the RE Directive (Radio Equipment Directive).

Furthermore, the manufacturer must maintain a copy of the ConnectCore 6 Plus Hardware Reference manual documentation and ensure the final product does not exceed the specified power ratings, antenna specifications, and/or installation requirements as specified in the user manual. If any of these specifications are exceeded in the final product, a submission must be made to a notified body for compliance testing to all required standards.

Maximum power and frequency specifications (Europe ETSI)

RF band	Peak antenna gain	Technology	Maximum transmit power at antenna connector	Frequencies
2.4 GHz	2.5 dBi	BT + EDR	4.9 mW (+6.9 dBm)	[BW 1 MHz] x 79 non-overlapping channels, # (center freq. MHz): * [2400 - 2483.5 MHz]: 0 (2402) to 78 (2480)
		Bluetooth LE	1.6 mW (+2.0 dBm)	[BW 2 MHz] x 40 non-overlapping channels, # (center freq. MHz): * [2400 - 2483.5 MHz]: 0 (2402) to 39 (2480)
		WLAN	55.8 mW (+17.5 dBm)	[BW 20 MHz] x 13 overlapping channels, # (center freq. MHz): * [2400 - 2483.5 MHz]: 1 (2412), 2 (2417), 3 (2422), 4 (2427), 5 (2432), 6 (2437), 7 (2442),8 (2447), 9 (2452), 10 (2457), 11 (2462), 12 (2467), 13 (2472)
				[BW 40 MHz] x 9 overlapping channels, # (center freq. MHz): * [2400 - 2483.5 MHz]: 3 (2422), 4 (2427), 5 (2432), 6 (2437), 7 (2442),8 (2447), 9 (2452), 10 (2457), 11 (2462)
5 GHz	4.6 dBi		22.3 mW (+13.5 dBm)	[BW 20 MHz] x 21 non-overlapping channels, # (center freq. MHz): * [5150 - 5250 MHz]: 36 (5180), 40 (5200), 44 (5220), 48 (5240) * [5250 - 5350 MHz]: 52 (5260), 56 (5280), 60 (5300), 64 (5320) * [5470 - 5725 MHz]: 100 (5500), 104 (5520), 108 (5540), 112 (5560),116 (5580), 132 (5660), 136 (5680), 140 (5700)
			7.9 mW (+9 dBm)	* [5725 - 5850 MHz]: 149 (5745), 153 (5765), 157 (5785), 161 (5805), 165 (5825)
			22.3 mW (+13.5 dBm)	[BW 40 MHz] x 9 non-overlapping channels, # (center freq. MHz): * [5150 - 5250 MHz]: 38 (5190), 46 (5230) * [5250 - 5350 MHz]: 54 (5270), 62 (5310) * [5470 - 5725 MHz]: 102 (5510), 110 (5550), 134 (5670)
			7.9 mW (+9 dBm)	* [5725 - 5850 MHz]: 151 (5755), 159 (5795)
			22.3 mW (+13.5	[BW 80 MHz] x 4 non-overlapping channels, # (center freq. MHz): * [5150 - 5250 MHz]: 42 (5210)

RF band	Peak antenna gain	Technology	Maximum transmit power at antenna connector	Frequencies
			dBm)	* [5250 - 5350 MHz]: 58 (5290) * [5470 - 5725 MHz]: 106 (5530)
			7.9 mW (+9 dBm)	* [5725 - 5850 MHz]: 155 (5775)

CE and UKCA OEM labeling requirements

The CE and UKCA markings must be clearly visible and legible when you affix it to the product. If this is not possible, you must attach these marks to the packaging (if any) or accompanying documents.

CE labeling requirements

The “CE” marking must be affixed to a visible location on the OEM product. The following figure shows CE labeling requirements.

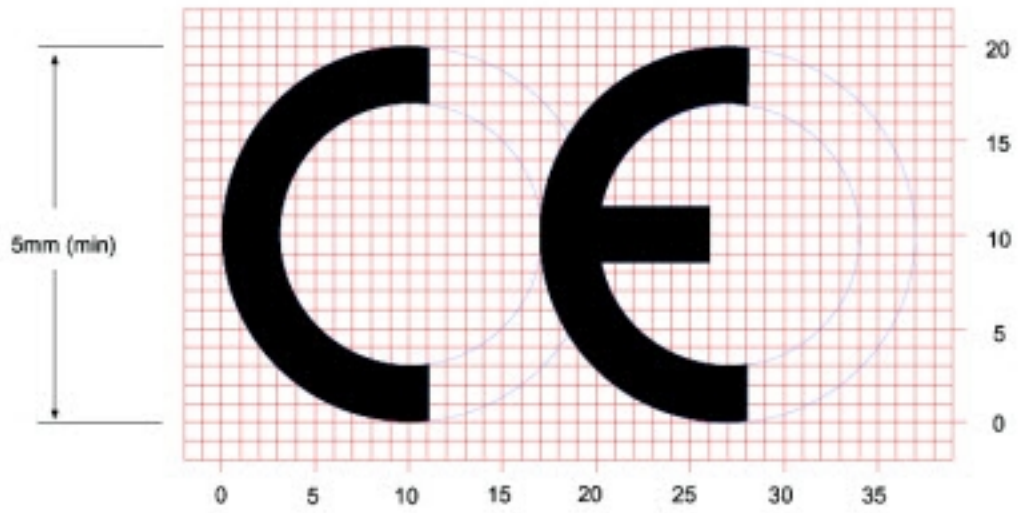

The CE mark shall consist of the initials “CE” taking the following form:

- If the CE marking is reduced or enlarged, the proportions given in the above graduated drawing must be respected.
- The CE marking must have a height of at least 5 mm except where this is not possible on account of the nature of the apparatus.
- The CE marking must be affixed visibly, legibly, and indelibly.

UK Conformity Assessed (UKCA) labeling requirements

See https://www.gov.uk/guidance/using-the-ukca-marking for further details.

You must make sure that:

- if you reduce or enlarge the size of your marking, the letters forming the UKCA marking must be in proportion to the version set out below
- the UKCA marking is at least 5 mm in height – unless a different minimum dimension is specified in the relevant legislation
- the UKCA marking is easily visible, legible (from 1 January 2023 it must be permanently attached)
- the UKCA marking can take different forms (for example, the colour does not have to be solid), as long as it remains visible, legible and maintains the required proportions.

Important note

Digi customers assume full responsibility for learning and meeting the required guidelines for each country in their distribution market. Refer to the radio regulatory agency in the desired countries of operation for more information.

Declarations of Conformity

Digi has issued Declarations of Conformity for the ConnectCore 6 Plus module concerning emissions, EMC, and safety. For more information, see www.digi.com/resources/certifications.

Important note

Digi customers assume full responsibility for learning and meeting the required guidelines for each country in their distribution market. Refer to the radio regulatory agency in the desired countries of operation for more information.

Approved antennas

The same antennas have been approved for Europe as stated in the FCC table for use with the ConnectCore 6 Plus module.

Bluetooth SIG-qualified hardware and firmware

The ConnectCore 6 Plus is qualified by the Bluetooth SIG.

At the hardware level, the ConnectCore 6 Plus is listed as a Bluetooth 5.0 Controller Subsystem under the following identifiers:

- QD ID # 169178
- Declaration ID # D055494

The Digi BlueZ Bluetooth library in the Linux firmware is listed as a Host Subsystem under the following identifiers:

- QD ID # 99403
- Declaration ID # D037483

You can combine these hardware and firmware elements into a new end product that is Bluetooth Sig-qualified with no additional Bluetooth testing, as long as you do not introduce any modifications to the Bluetooth design.

Japan

電波法により5GHz帯は屋内使用に限ります。

This device has been granted a designation number by Ministry of Internal Affairs and Communications according to:

Ordinance concerning Technical Regulations Conformity Certification etc. of Specified Radio Equipment (特定無線設備の技術基準適合証明等に関する規則).

- Article 2, Paragraph 1, Item 19, 19-3
- Model/Name of equipment: ConnectCore 6P
- Radio label marking:
  - R: 202-DGJ110
  - T: D 21-0030 202

This device should not be modified (otherwise the granted designation number will be invalid).

- 2412 ~ 2472 MHz 13 channels
- 2422 ~ 2462 MHz 9 channels
- 5180 ~ 5320 MHz 8 channels
- 5190 ~ 5310 MHz 4 channels
- 5210 ~ 5290 MHz 2 channels
- 5500 ~ 5720 MHz 12 channels
- 5510 ~ 5710 MHz 6 channels
- 5530 ~ 5690 MHz 3 channels

Approval Label (MIC Marking)

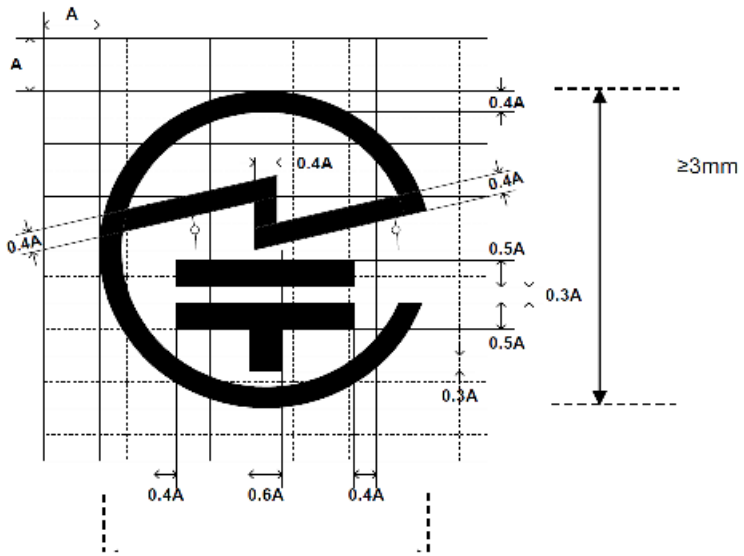

Label text

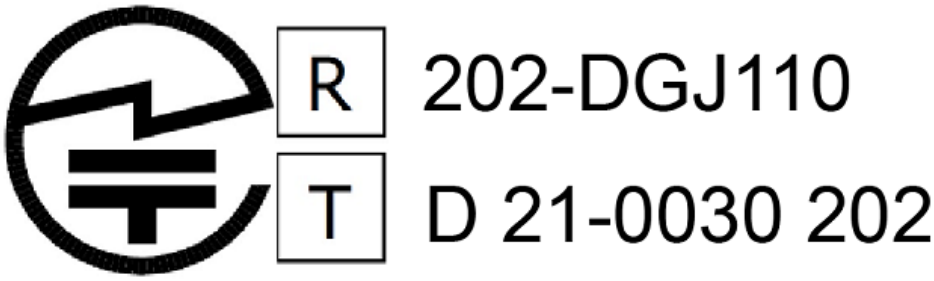

Note End product label should support radio marking for Japan. If not, radio marking shall be documented in the user manual.

Note The warning “5GHz (W52, W53) band is for indoor use only (Excluding communication with registered stations)” must go on the end product – or E Label (Display).