HEXAGON

Operating Instructions

# Laser Scanner

LS-R-4.8

| LANGUAGE | DESCRIPTION | PAGE |
| --- | --- | --- |
| DE | BETRIEBSANLEITUNG | 3 |



Manual Version V01.00-REV01.00
Release Date 2021-03-19

# Table of Contents

**1 Description ... 5**
1.1 General ... 5
1.1.1 Preface ... 5
1.1.2 Safety Instructions ... 5
1.1.3 Validity ... 7
1.2 Purpose ... 7
1.3 Declarations and Approvals ... 8
1.3.1 Europe and UK (EU an UKCA Declarations of Conformity) ... 8
1.3.2 USA (FCC Declaration) ... 8
1.3.3 Canada (IC /RSS Declaration) ... 8
1.3.4 China ... 8
1.3.5 Japan ... 8
1.4 System Components ... 9
1.5 Technical Data ... 10
1.5.1 Laser scanner technical data ... 10
1.5.2 Calibration sphere technical data ... 10
1.6 Dimensions ... 11
1.7 Markings ... 12
1.8 Function parameters ... 14
1.8.1 Measuring Range ... 14
1.8.2 Sensitivity and gain factor (Laser Sensor Gain) ... 15
1.8.3 Quality filter ... 15
1.9 Transmission and Reception Area ... 16
1.10 Delivery Contents, Accessories and Spares ... 17
1.10.1 Delivery Contents ... 17
1.10.2 Accessories, General ... 17
1.10.3 Shanks ... 17
1.10.4 Spares ... 18
**2 Operation ... 19**
2.1 Tools, Measurement and Test Equipment ... 19
2.2 Consumables for maintenance ... 19
2.3 Commissioning and Setup of the Scanner ... 20
2.3.1 Mounting/dismounting the shank ... 20
2.3.2 Inserting/Replacing the Battery ... 21
2.3.3 Pairing the scanner with a receiver ... 22
2.3.4 Warming up the laser scanner ... 24
2.4 Aligning the scanner for measuring ... 25
2.4.1 Marking of the transmission window on the scanner housing ... 25
2.4.2 Measuring edges and special characteristics ... 26
2.4.3 Interrupting the beam path ... 27
2.4.4 Direct reflections ... 27
2.4.5 Secondary reflections ... 28
2.5 Optical Status Display ... 29
2.6 Troubleshooting ... 30
2.6.1 Problems with data quality ... 30

2.6.2 Error during operation ..... 30
2.7 Maintenance and Cleaning ..... 31
2.7.1 Cleaning the optical windows of the laser scanner ..... 31
2.7.2 Cleaning the calibration sphere ..... 32
2.7.3 Inspection ..... 33

# 1 Description

## 1.1 General

### 1.1.1 Preface

The safety instructions in this manual have to be strictly observed to guarantee a safe and reliable function of the touch probe and to avoid personal and material damage. The meaning of the symbols related to the safety instructions is described in the table below:

| | |
|---|---|
| ⚠ **CAUTION** | CAUTION indicates a hazardous situation that, if not avoided, could result in injury. |
| ***NOTICE*** | NOTICE indicates important information that, if not observed, could lead to property damage/malfunctions. |
| ***INFORMATION*** | INFORMATION indicates important information or helpful advices for the work with the described device. |

### 1.1.2 Safety Instructions

| ⚠ **CAUTION** |
|---|
| **Risk of injury!**<br>At high spindle rotation speeds, there is a danger that the device will come out of the spindle, or that parts of the device will be ejected.<br>• Make sure that the laser scanner is only used with no spindle rotation speed |

| ⚠ **CAUTION** |
|---|
| **Risk of injury due to hot device surface!**<br>Especially with high ambient temperatures, the device can get hot during operation.<br>• If the laser scanner has been in operation, it must only be handled with protective gloves. |

**⚠ CAUTION**

**Risk of eye injuries due to laser radiation!**

The LS-R-4.8 laser scanner is a laser class 2 product according to EN/IEC 60825-1:2014. To avoid eye injuries, the following instructions must be followed:

- Do not look directly into the laser beam.
- Do not point the laser beam at people.
- When the laser scanner is not in use, protect it against unauthorised access.
- Switch off the system before cleaning or maintenance work.

**Fig. 1 Hazard labels on the laser scanner housing**

***NOTICE***

**Risk of damage to the equipment!**

Rotating the spindle at high speed can damage the laser scanner.

- Make sure that the laser scanner is only used with no spindle rotation speed.

***NOTICE***

**Risk of damage to the equipment!**

When the battery compartment is open, there is a risk that dirt and moisture can penetrate the sensor. The specified protection class (IP68) only applies when the battery compartment is closed.

- Make sure that the laser scanner is only used with no spindle rotation speed.

***NOTICE***

**Risk of material damage!**

- The laser scanner is not monitored for collisions. All travel paths must be programmed so that no collisions can occur.

***NOTICE***

**Risk of material damage caused by third-party parts!**

- Only use the original spare parts listed in these operating instructions to perform maintenance and repairs.

***NOTICE***

**Possible damage to the laser scanner**

Deposits on the optical windows have a significant effect on the measuring accuracy of the laser scanner.

- Avoid drips or heat damage to prevent a decrease in accuracy or sensitivity.
- Do not touch the optical windows on the laser scanner.
- Do not use solvents to clean the housing of the laser scanner.
- Store only within the specified storage temperature range, see chapter 1.5.1.
- Avoid the formation of condensation on the optical elements, e.g. by quickly changing the temperature.

***INFORMATION***

The information given in this manual can be changed by the manufacturer at any time. Thus the user is responsible to regularly inquire about updated information.

### 1.1.3 Validity

These operating instructions are valid for the hardware available at the date of creation of these operating instructions. The manufacturer reserves the right to make technical modifications.

## 1.2 Purpose

The LS-R-4.8 laser scanner is used for measuring and detecting various workpiece geometries (e.g. arches, surfaces, corners, edges, areas, slots, grooves, curves, cut-outs, polygons, shanks and spherical surfaces). It is also suitable for measuring complex geometries, like three-dimensional surfaces and for measurements involving pivot axes. The measured workpieces can consist of a variety of different materials (e.g. processed, semi-finished, punched, forged, cast material, as well as dark materials such as rubber and carbon fibre).
Radio-wave transmission ensures that the measuring signals from the laser scanner can be transmitted to the receiver over large distances.
The measuring results are evaluated using the program **HxGN NC Measure**.

## 1.3 Declarations and Approvals

### 1.3.1 Europe and UK (EU an UKCA Declarations of Conformity)

The EU and UKCA Declarations of Conformity can be found at the end of these operating instructions.
If required, a copy of the signed original declarations of conformity may be requested from the address given on the back cover.

### 1.3.2 USA (FCC Declaration)

This device complies with Part 15 of the FCC. Operation is subject to the following two conditions:

(1) This device may not cause harmful interference, and

(2) This device must accept any interference received, including interference that may cause undesired operation.

This device has been tested and found to comply with the limits for a Class A digital device, pursuant to Part 15 of the FCC Rules. These limits are designed to provide reasonable protection against harmful interference when the device is operated in a commercial environment. This device generates, uses, and can radiate radio frequency energy and, if not installed and used in accordance with the instruction manual, may cause harmful interference to radio communications. Operation of this device in a residential area is likely to cause harmful interference in which case the user will be required to correct the interference at his own expense.

In order to comply with FCC and IC RF Exposure requirements, the device must be installed and operated such that a minimum separation distance of 20 cm is maintained between the device and all persons during normal operation.

Changes or modifications not expressly approved by m&h Inprocess Messtechnik GmbH may void the FCC/RSS authorization to operate this equipment.

FCC ID: MFFLSR48

### 1.3.3 Canada (IC /RSS Declaration)

**English:**

This device complies with Industry Canada licence-exempt RSS standard(s).
Operation is subject to the following two conditions:

(1) This device may not cause harmful interference, and

(2) This device must accept any interference received, including interference that may cause undesired operation.

**Français:**

Le présent appareil est conforme aux CNR d'Industrie Canada applicables aux appareils radio exempts de licence.
L'exploitation est autorisée aux deux conditions suivantes:

(1) l'appareil ne doit pas produire de brouillage, et

(2) l'appareil doit accepter tout brouillage radioélectrique subi, même si le brouillage est susceptible d'en compromettre le fonctionnement.

IC: 5782A-LSR48

### 1.3.4 China

This device has an RTA certificate (**R**adio Transmission Equipment **T**ype **A**pproval Certificate) issued by the SRRC (**S**tate **R**adio **R**egulatory **C**ommittee) for use in China.

CMIIT ID: 2016DJ1391

### 1.3.5 Japan

This device has a certificate issued by the Japanese MIC (**M**inistry of **I**nternal Affairs and **C**ommunications) for use in Japan. This certification complies with the Japanese Radio Law:

R 202-LSI069

## 1.4 System Components

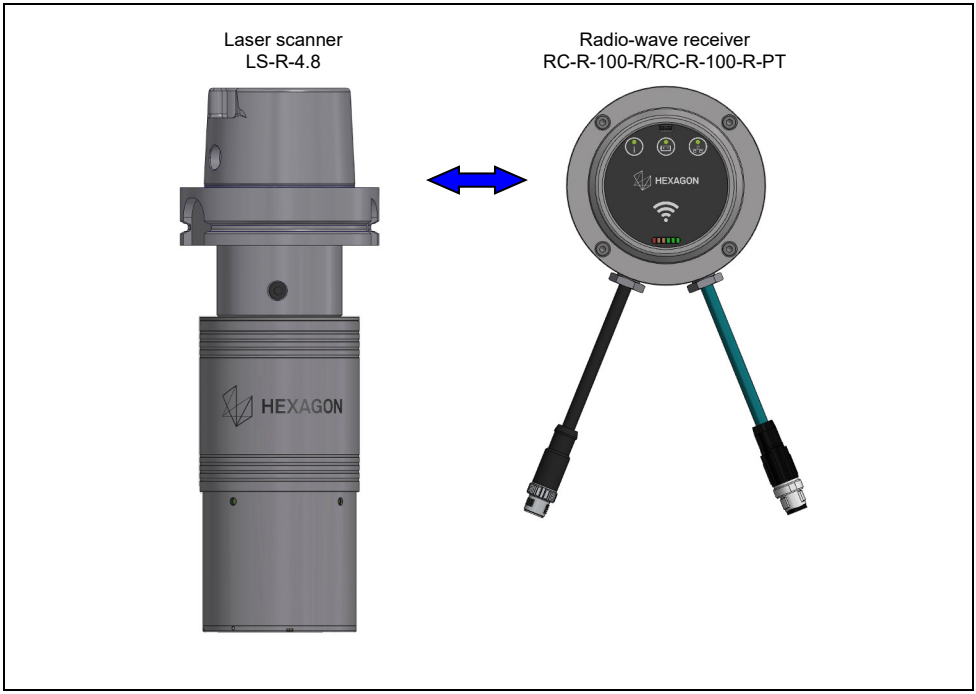


**Fig. 2 System Components**

## 1.5 Technical Data

### 1.5.1 Laser scanner technical data

| | | |
|---|---|---|
| Transmission frequency | | 2400-2483.5 MHz (2.4 GHz)<br>5.18-5.24 GHz (WLAN 5GHz)<br>(20 MHz channels 36, 40, 44, 48) |
| Transmission/reception range | | Up to 15 m |
| Laser class | | 2 (EN / IEC 60825-1:2014) |
| Laser manufacturer | | OSRAM Opto Semiconductors GmbH |
| Laser type | | PL450B (laser diode) |
| Emitted wavelength (blue) | | 450 nm |
| Maximum average radiation power | | 1 mW |
| Beam spread | | 24° (visual)<br>17,2° (measuring range) |
| Laser type | | CW Laser (Continuous Wave) |
| Working distance and depth (Z)<br>(outer housing edge to average working distance) | | 115 ±40 mm |
| Line width | | 27,1 mm (minimum working distance)<br>39,2 mm (average working distance)<br>51,3 mm (maximum working distance) |
| Zoom mode 1 | Frame rate | 42 Hz |
| | Raw points per line (µm) | 841 |
| | Raw point spacing (µm) | 32 (minimum working distance)<br>47 (average working distance)<br>61 (maximum working distance) |
| Zoom mode 2 | Frame rate | 80 Hz |
| | Raw points per line (µm) | 421 |
| | Raw point spacing (µm) | 65 (minimum working distance)<br>93 (average working distance)<br>122 (maximum working distance) |
| Zoom mode 3 | Frame rate | 144 Hz |
| | Raw points per line (µm) | 211 |
| | Raw point spacing (µm) | 129 (minimum working distance)<br>187 (average working distance)<br>244 (maximum working distance) |
| Data rate | | 30.000 to 36.000 Pt/sec |
| Sensor’s insensitivity to extraneous light | | 5,000 lx (diffused, indirect artificial light) |
| Operating temperature | | 5 to 40 °C (41 to 104 °F) |
| Temperature range for specified accuracy | | 15 to 40 °C (59 to 104 °F) |
| Storage temperature | | -25 to +70 °C |
| Ambient humidity | | 90 % non-condensing |
| Weight | | 1900 g (without batteries) |
| Power supply | | 4x 3.7 V battery, 26650, Li-ion, 5000 mAh |
| Battery lifetime (continuous measurement) | | 10 h |
| System booting time | | 5 s |
| Protection against dust and water | | IP68 (IEC 60529) |

### 1.5.2 Calibration sphere technical data

| | |
|---|---|
| Material | Epoxy resin |
| Coating thickness | 30 to 50 µm |
| Diameter | 25,4XX mm (1") |
| Colour | White (Munsell N9.4) |
| Gloss (60°) | 3 ±2.5 |

## 1.6 Dimensions

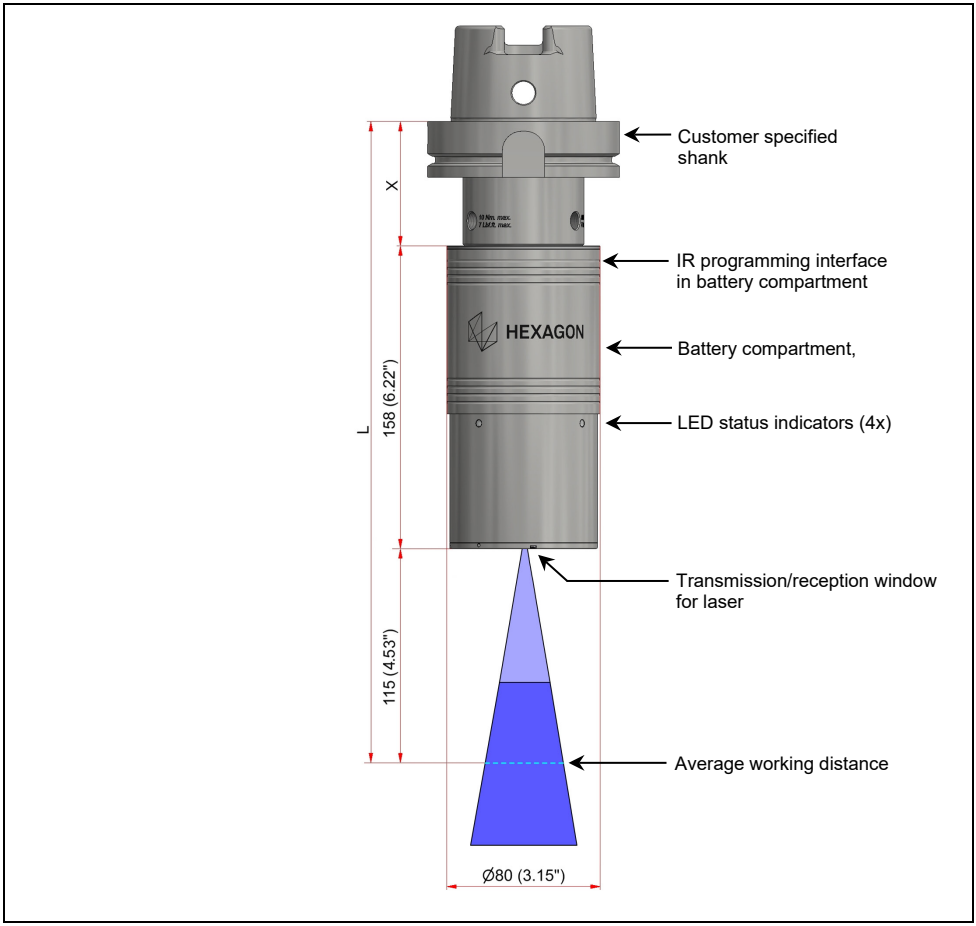


**Fig. 3 Dimensions of LS-R-4.8**

| ***INFORMATION*** |
| --- |
| The dimension X for the length of the shank, required to calculate the total length L of the laser scanner system, can be found in the accessories catalogue.<br>The total length L is the sum of the laser scanner length and the dimension X. |

## 1.7 Markings

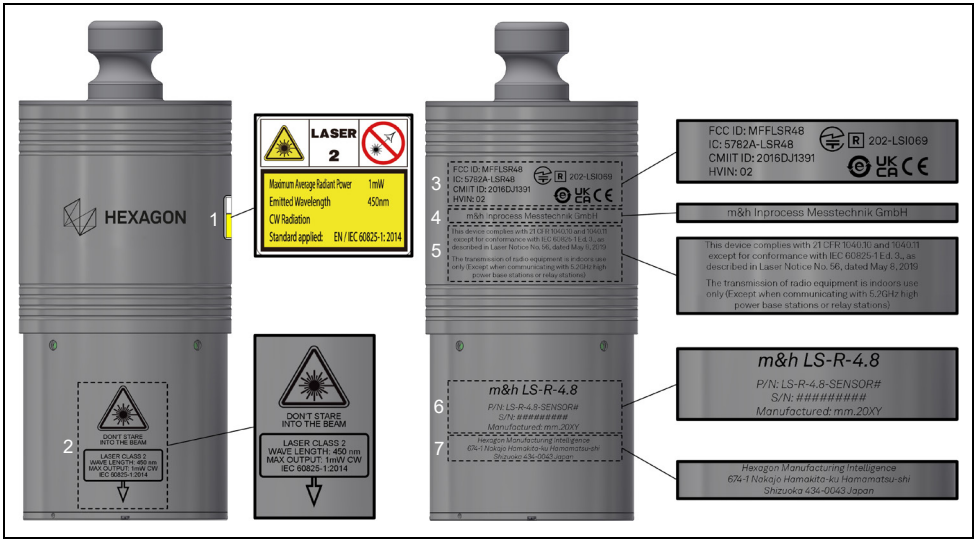


**Fig. 4 Markings**

| Position | Labeling | Description |
|---|---|---|
| 1 | 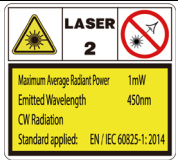 | Laser warning, complete |
| 2 | | Laser warning with information on the laser class and position indicator for the laser transmission window (refer to chapter 2.4.1) |
| 3 | | Approval numbers for national and European radio approvals and conformity labels |
| 4 | | Registered applicant for radio licenses |
| 5 | 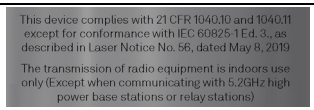 | Compliance information for FDA Laser Regulations (21CFR 1040.10 and 1040.11) and radio declaration for indoor use |
| 6 | 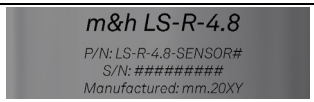 | Devive information:<br>• Product name<br>• Part numberr<br>• Serial number<br>• Manufacturing date |
| 7 | 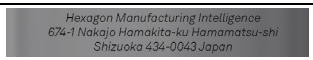 | Manufacturer address |

## 1.8 Function parameters

### 1.8.1 Measuring Range

The following illustration shows the recommended average working distance and the permissible working range between the minimum and maximum possible working distance:

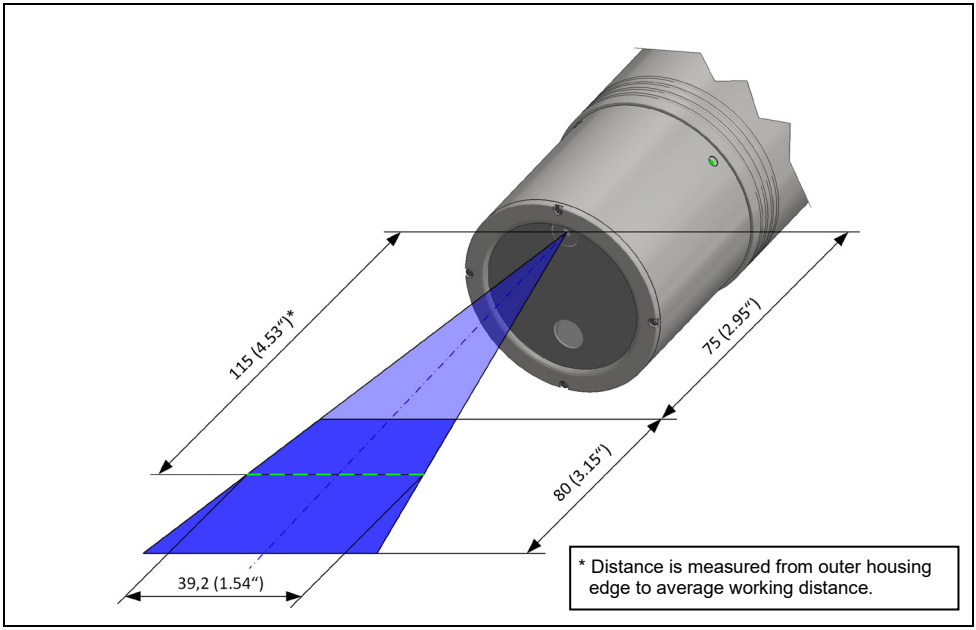


**Fig. 5 Measuring Range**

## 1.8.2 Sensitivity and gain factor (Laser Sensor Gain)

The gain factor set depends on the workpiece to be measured (material, surface condition). This setting increases the sensitivity of the laser scanner during data acquisition. Depending on the measuring result, it may be useful to adjust the gain factor in the measuring software.

| ***INFORMATION*** |
|---|
| The gain factor setting significantly affects the quality of the recorded measuring data. If data quality is poor, adjusting the gain factor can improve data quality. The following gain factor settings are recommendations and can be adapted to individual ambient/material conditions. |

| Gain factor | White | Grey/Bright steel | Carbon |
|---|---|---|---|
| 5 | - | - | X |
| 4 | - | X | X |
| 3 | X | X | - |
| 2 | X | X | - |
| 1 | X | - | - |

| ***INFORMATION*** |
|---|
| If the acquisition of measuring data is difficult when scanning dark, shiny or transparent surfaces, the gain factor should be set to one of the settings **"4"** or **"5"**.<br>However, this setting, and the resulting higher sensitivity of the laser scanner, increases the probability of recording low quality data.<br>In order to automatically filter out this data from the measurement, the quality filter can also be activated. |

## 1.8.3 Quality filter

The quality filter is used to filter out low quality measuring points from the measurement.
The following quality filters are used here:

- Error data filter for 3D data
- Angle filter
- Outlier filter
- Edge filter

| ***INFORMATION*** |
|---|
| If the acquisition of measuring data is still difficult when scanning dark, shiny or transparent surfaces, despite setting the gain factor to **"4"** or **"5"**, the quality filter should be deactivated.<br>However, this setting reduces both the measuring accuracy of the system and the data quality. |

## 1.9 Transmission and Reception Area

***INFORMATION***

The transmission/reception ranges shown below only apply under optimum operating conditions. For a secure signal transmission, laser scanner and receiver must be located in the transmission area of the other device. The range for a secure signal transmission is up to 15 m.

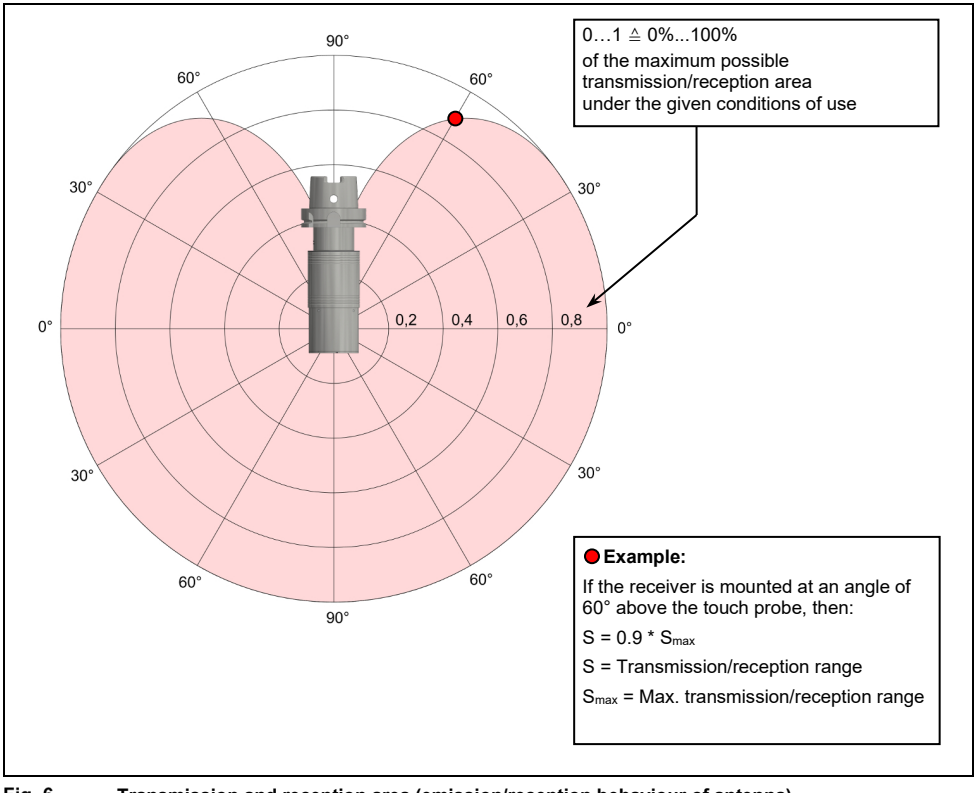


**Fig. 6 Transmission and reception area (emission/reception behaviour of antenna)**

## 1.10 Delivery Contents, Accessories and Spares

### 1.10.1 Delivery Contents

| Order Number | Description |
|---|---|
| **LS-R-4.8-SENSOR#** | **Laser scanner LS-R-4.8** |
| | 4x batteries, type IMR26650 (6401) |
| | USB stick with operating Instructions (LS-USB-KEY-OI) |
| | Transport case (LS-R-4.8-CASE) |

### 1.10.2 Accessories, General

| Order Number | Description | Illustration |
|---|---|---|
| 03939542 | M8 calibration sphere V2 - Standard | |
| QUAL-SPHERE-HOLDER | Calibration sphere holder | |
| 6402 | Battery charger | |
| 6409 | Programming clip | |
| 6259 | IR-RAW stick | 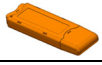 |
| LS-R-TB | Tool box, consisting of:<br>4x batteries, type IMR26650 (6401)<br>4x cleaning cloths (4297)<br>1x battery charger (6402)<br>1x programming clip (6409)<br>1x IR-RAW stick (6259)<br>1x Cylindrical pin 1.5x16 (6412)<br>1x USB 2.0 Extension 1.8 m<br>1x Storage box (6410)<br>1x USB Charger with quick charge 3.0 (H00028517) | |

### 1.10.3 Shanks

In conjunction with laser scanner LS-R-4.8, only shanks for a shaft diameter of 28 mm can be used. It is recommended to use a shank with indexing. An overview of available shanks for the laser scanner can be found in the accessories catalogue.

| ***INFORMATION*** |
|---|
| If a shank is used without indexing, a calibration must first be performed to determine the exact alignment of the system in the spindle before using the laser scanner. |

### 1.10.4 Spares

| Order Number | Description | Illustration |
|---|---|---|
| 0506 | Clamping screw | |

# 2 Operation

## 2.1 Tools, Measurement and Test Equipment

| Order Number | Description | Illustration |
|---|---|---|
| 3489 | Hexagon key AF4 mm | |
| 4297 | Optics cleaning cloth | |
| LS-R-TB# | Tool box, consisting of:<br>4x batteries, type IMR26650 (6401)<br>4x cleaning cloths (4297)<br>1x battery charger (6402)<br>1x programming clip (6409)<br>1x IR-RAW stick (6259)<br>1x Cylindrical pin 1.5x16 (6412)<br>1x USB 2.0 Extension 1.8 m<br>1x Storage box (6410)<br>1x USB Charger with quick charge 3.0 (H00028517) | |

## 2.2 Consumables for maintenance

In addition to the supplied tools, measuring and test equipment, the following auxiliary equipment and consumables can be used for cleaning. These are not part of the delivery contents and must be purchased separately if necessary.

| Activity | | Auxiliary equipment/Consumables |
|---|---|---|
| Dry cleaning | Optical windows | Clean, soft, lint-free micro-fibre cloth |
| | Calibration sphere | Clean, lint-free gloves |
| | | Clean, soft, lint-free micro-fibre cloth |
| Wet cleaning | Optical windows | Clean, soft, lint-free micro-fibre cloth |
| | | Camera lens cleaner or isopropyl alcohol |

## 2.3 Commissioning and Setup of the Scanner

### 2.3.1 Mounting/dismounting the shank

1. Dismounting the shank:
   1.1 Remove clamping screws from the shank.
   1.2 Remove shank.
2. Mounting the shank:
   2.1 Slide the shank onto the laser scanner.
   2.2 Insert the clamping screws and tighten to the torque specified in Fig. 7.
3. Calibrate the laser scanner.

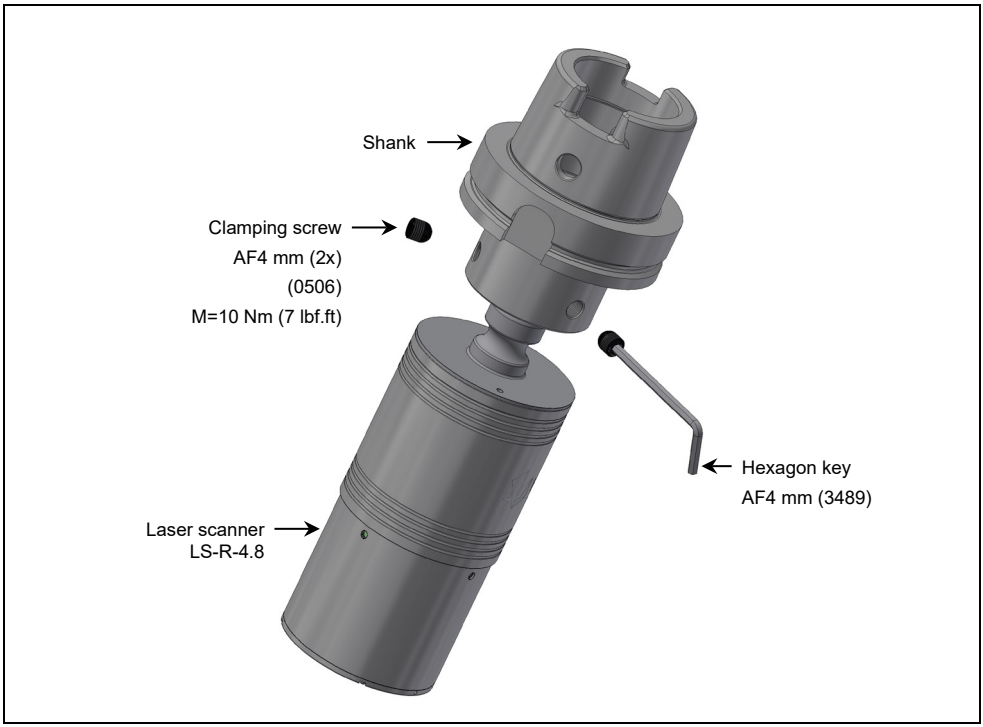


**Fig. 7 Mounting/dismounting the shank**

## 2.3.2 Inserting/Replacing the Battery

**NOTICE**

**Risk of damage to the equipment!**

- Clean and dry the laser scanner well before opening!
- Do NOT use compressed air to clean the laser scanner!
- Replace/recharge empty batteries immediately!

1. Carefully slide the battery compartment sleeve down (1./Fig. 8).

**NOTICE**

**Risk of damage to the equipment!**

The laser scanner LS-R-4.8 is protected against wrong polarity (short circuit protection). It is nevertheless necessary to pay attention to the polarity when inserting a new battery, because the device will not work with wrong polarity! The correct polarity is shown on the battery compartment by the corresponding symbols (+/-).

2. Take the used battery out of the battery compartment and insert a new battery (2./Fig. 8).

**NOTICE**

**Risk of damage to the equipment!**

- When closing the battery compartment, ensure that both O-rings are properly seated!

3. Carefully slide the battery compartment sleeve upwards as far as it will go (3./Fig. 8).

**INFORMATION**

After replacing the battery, the time for starting the laser scanner (reboot) is approx. 5 s!

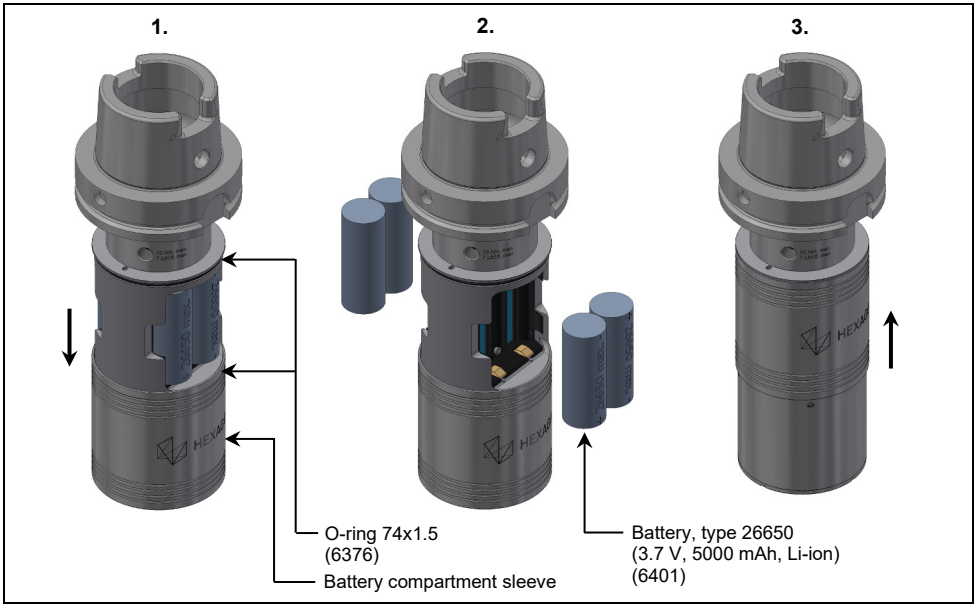


**Fig. 8 Battery replacement**

### 2.3.3 Pairing the scanner with a receiver

| ***INFORMATION*** |
|---|
| In order to pair the laser scanner with a radio-wave receiver type RC-R-100, **the radio-wave receiver must be in pairing mode** (see operating instructions RC-R-100). The required pairing information is entered in the associated PC software and then transmitted with the programming clip to the infrared interface of the LS-R-4.8 laser scanner. Afterwards, the pairing process is started. |

1. Remove the cover cap from the IR stick which is inserted in the programming clip.
2. Connect the USB port of the IR stick to the PC using the associated USB cable.
3. Start the pairing program.

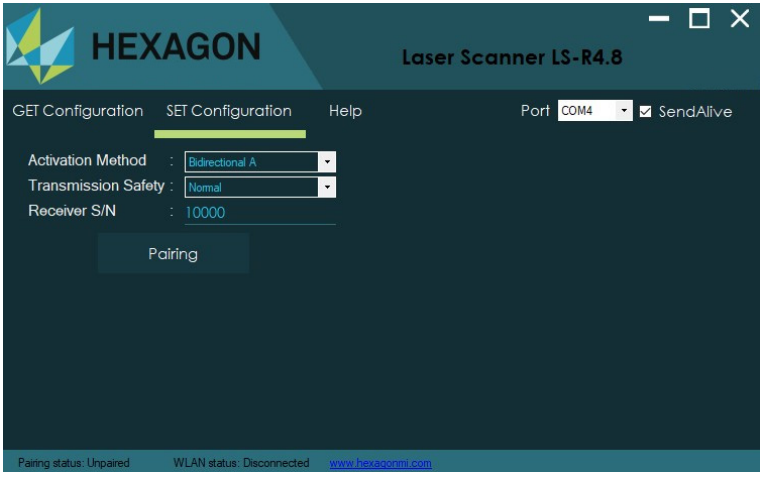


**Fig. 9 Pairing software**

4. In the **"SET Configuration"** area, enter the pairing information (activation code, transmission security and serial number of the radio-wave receiver to be paired).
5. Slide the battery compartment sleeve downwards.
6. Insert batteries as described in chapter 2.3.2.

| ***INFORMATION*** |
|---|
| After inserting the final battery, the laser scanner will be in pairing mode for approx. 5 s. During this time, the programming clip must be mounted and pairing must be started in the pairing software. The necessary preparations and settings in the pairing software must therefore be carried out before inserting the batteries. |

7. Mount the programming clip on the laser scanner so that the infrared interface on the programming clip is aligned with the infrared interface inside the battery compartment of the LS-R-4.8 laser scanner.
8. Push the battery compartment sleeve up until it closes on the programming clip.

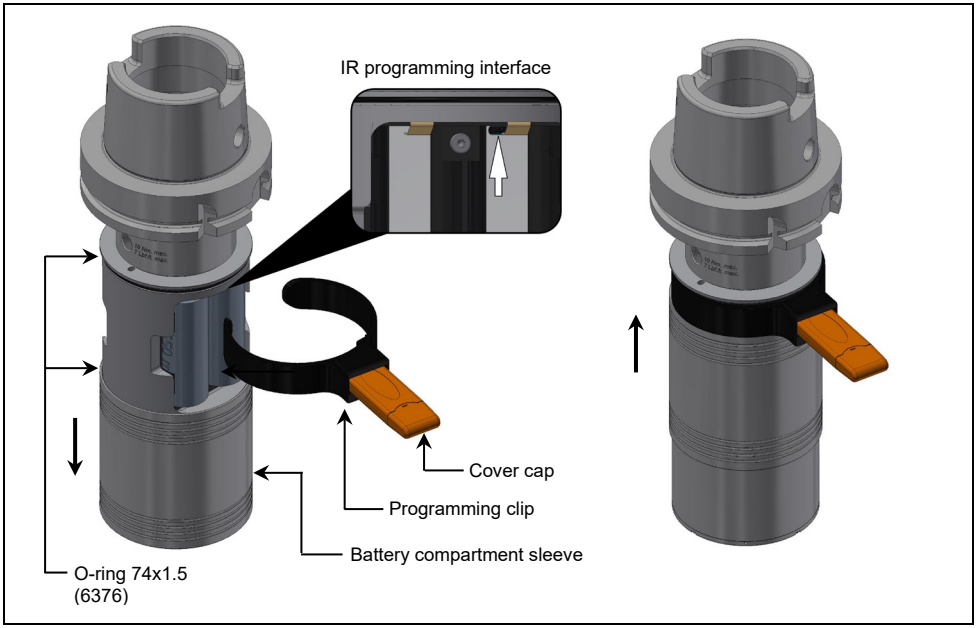


**Fig. 10 Mounting the programming clip**

9. Use the **[Pairing]** button in the pairing software to start pairing (more details on how to use the pairing software can be found in the software user manual).

| ***INFORMATION*** |
|---|
| After successful pairing, the WLAN connection is set up to transfer the scan data. This process is automatic and requires no further action by the user. |

10. After successful pairing, disconnect the USB cable from the IR stick.
11. Attach the cover cap on the IR stick.
12. Slide the battery compartment sleeve downwards and remove the programming clip from the laser scanner.
13. Carefully slide the battery compartment sleeve upwards as far as it will go.

| ***NOTICE*** |
|---|
| **Risk of damage to the equipment!**<br>• When closing the battery compartment, ensure that both O-rings are properly seated! |

### 2.3.4 Warming up the laser scanner

| ***INFORMATION*** |
|---|
| The system accuracy is considered stable after 60 minutes of use (“warm-up” time).<br>The scanner maximum location error is 30 µm after stabilization.<br>The scanner actual location error is written in the "Inspection Report" delivered with the Scanner.<br>For reference, the subsequent table shows sample data of the difference in accuracy between the actual used time and the stabilized accuracy, at an environment temperature of 23°C.<br>The system (machine with laser scanner) actual accuracy is evaluated on the machine during installation. |

| Time [min] | Offset Error [mm] | Depth Error [mm] |
|---|---|---|
| 0 | 0,024 | 0,004 |
| 1 | 0,012 | 0,010 |
| 3 | 0,011 | 0,010 |
| 5 | 0,009 | 0,005 |
| 15 | 0,006 | 0,001 |
| 30 | 0,004 | 0,003 |
| 60 | 0,000 | 0,000 |

## 2.4 Aligning the scanner for measuring

**NOTICE**

**Risk of incorrect measuring data!**

The sensor's insensitivity to extraneous light is 5000 lx. This permits measuring under diffused, artificial light. If the sensor is pointed directly at an artificial light source during operation or exposed to direct sunlight, the direct incidence of light can lead to the recording of incorrect measuring data.

- Do not point the sensor directly at light sources during operation.
- Dim or shade the direct light source if the sensor needs to be aligned directly with the light source.

### 2.4.1 Marking of the transmission window on the scanner housing

For correct alignment of the laser scanner for measuring, the scanner housing is marked on one side with an arrow directly below the laser warning symbol (see Fig. 11). The laser transmission aperture (transmission window) is located on this side.

**Fig. 11 Marking of the laser transmission window**

## 2.4.2 Measuring edges and special characteristics

| ***INFORMATION*** |
| --- |
| For the exact measuring of edges and special characteristics, the sensor must be aligned across the areas to be measured. If the sensor is aligned parallel to such workpiece geometries, there is a risk of inaccurate measurements. |

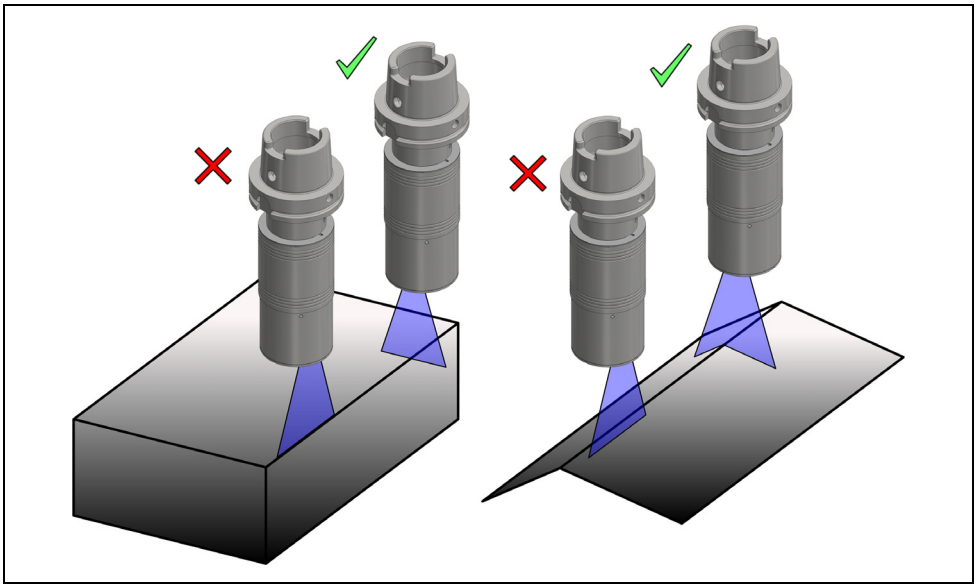

**Fig. 12 Measuring edges and special characteristics**

### 2.4.3 Interrupting the beam path

| ***INFORMATION*** |
|---|
| Depending on the profile of the object to be measured, the beam may be blocked and the beam path may be interrupted, for example, due to object edges (see Fig. 13).<br>• For optimal measuring results, always align the sensor with the profile to avoid interruptions to the beam path as far as possible. |

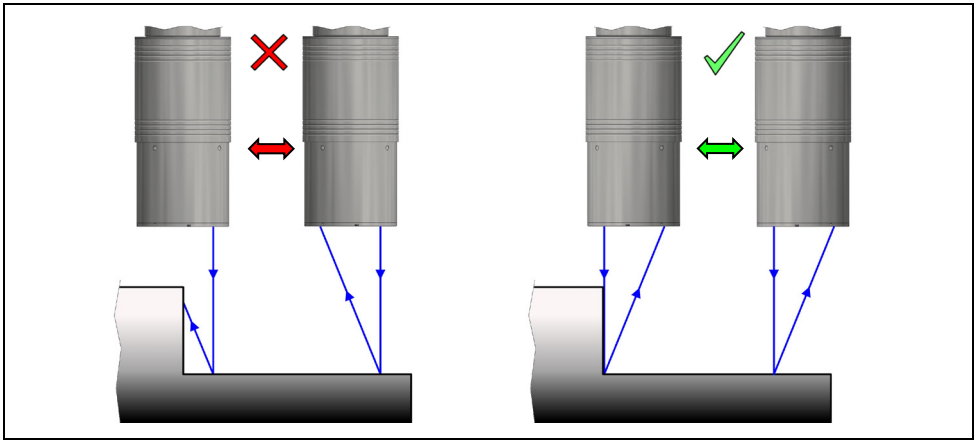

**Fig. 13 Interrupting the beam reflection**

### 2.4.4 Direct reflections

| ***INFORMATION*** |
|---|
| Depending on the profile and surface condition of the workpiece to be measured, especially in the case of shiny or polished surfaces, the laser beam can be reflected so that it directly hits the transmission window of the laser scanner. This may overload the laser scanner occasionally.<br>• To avoid direct reflections, align the sensor according to Fig. 14 . |

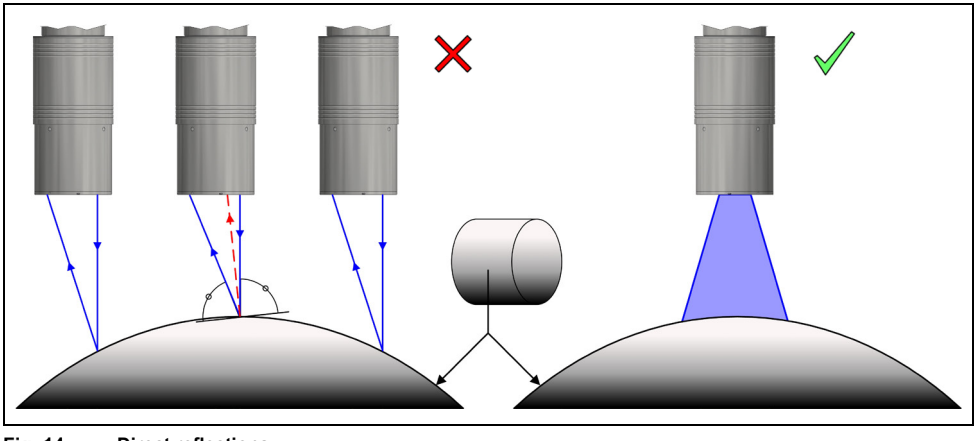

**Fig. 14 Direct reflections**

## 2.4.5 Secondary reflections

| ***INFORMATION*** |
| --- |
| Depending on the profile and surface condition of the workpiece to be measured, especially in the case of shiny or convex surfaces, secondary reflections can occur. This may mean that the measuring results are falsified.<br>• To avoid secondary reflections, align the sensor according to Fig. 15 . |

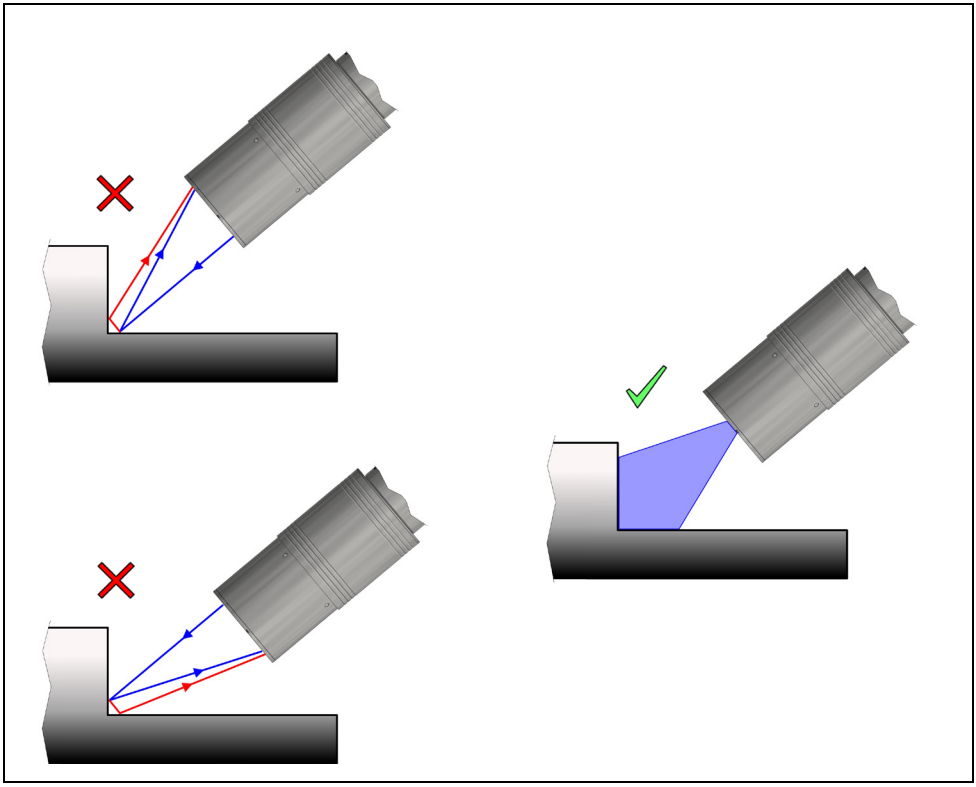

**Fig. 15 Secondary reflections**

## 2.5 Optical Status Display

The table below gives an overview of the blinking patterns of the LEDs (Fig. 16) and their meaning.

| | |
|---|---|
| **LEDs permanently blue (approx. 5 s)** | Laser scanner starts after inserting batteries |
| **LEDs blinking green** | Laser scanner is transmitting signals |
| **LEDs blinking green/red** | LOW BATTERY |
| **LEDs blinking orange** | Trigger (synchronisation signal) |
| **LEDs permanently red** | Error |

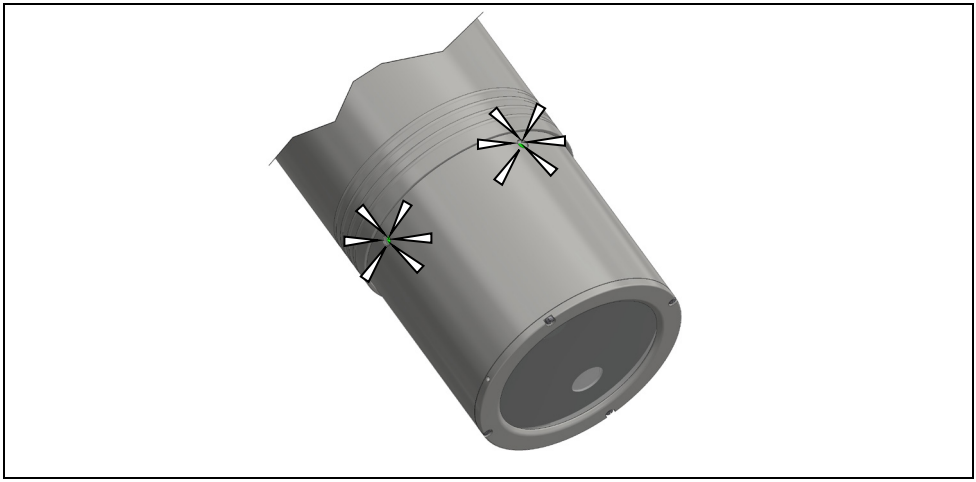

**Fig. 16 Optical Status Display**

## 2.6 Troubleshooting

| ***INFORMATION*** |
|---|
| In addition to the information in this chapter, further troubleshooting options and frequently asked questions about the operation of the laser scanner can be found at www.HxGN.biz/FAQ-Laserscanning. |

### 2.6.1 Problems with data quality

| Error | Possible cause | Solution |
|---|---|---|
| Local noisy data in the point cloud. | Dust or dirt on the workpiece amplifies the laser signal. | Clean the workpiece. |
| | Local modification of the surface properties of the workpiece. | - |
| Noisy zone in the point cloud in a certain part of the laser beam. | Highly reflective surface of the workpiece causes direct reflection back to the sensor. | Change workpiece alignment. |
| | Finger prints or dirt on the sensor windows. | Clean the optical windows (see chapter 2.7.1). |
| The sensitivity has decreased or the recommended gain factor settings (see chapter 1.8.2) do not allow the laser scanner to record measuring data. | Finger prints or dirt on the optical windows of the laser scanner. | Clean the optical windows (see chapter 2.7.1). |
| | The laser scanner is faulty. | Contact the service department at m&h Inprocess Messtechnik GmbH. |

### 2.6.2 Error during operation

| Error | Possible cause | Solution |
|---|---|---|
| Laser beam is emitted, but data cannot be recorded. | The workpiece is outside the measuring range. | Adjust the measuring distance and depth and check with a bright workpiece. |
| | The surface cannot be measured. | Increase the sensitivity of the laser scanner by setting the gain factor correctly (see chapter 1.8.2). |
| | The laser scanner is faulty. | Contact the service department at m&h Inprocess Messtechnik GmbH. |
| | Scanning speed is too high. | Switch off the quality filter in NC Measure (see chapter 1.8.3). |

## 2.7 Maintenance and Cleaning

### 2.7.1 Cleaning the optical windows of the laser scanner

**NOTICE**

**Risk of measuring errors!**

Damage to the optical windows affects the measuring accuracy of the laser scanner.

- Contact the service department at m&h Inprocess Messtechnik GmbH.

**NOTICE**

**Risk of measuring errors!**

Grease and dirt deposits on the optical windows reduces the measuring accuracy of the sensor.

- Do not touch the optical windows of the sensor with bare hands or contaminate it otherwise.
- Remove contamination from the optical windows before measuring.
- Do not use aggressive cleaning agents, as they may damage the optical windows.

1. Wipe the optical windows with a clean, soft, lint-free micro-fibre cloth or with the supplied optics cleaning cloth (4297).
2. If the contamination cannot be removed with the cloth, gently wipe the windows with a camera lens cleaner or isopropyl alcohol.
3. If the contamination cannot be removed even with a camera lens cleaner or isopropyl alcohol, contact the service department at m&h Inprocess Messtechnik GmbH.

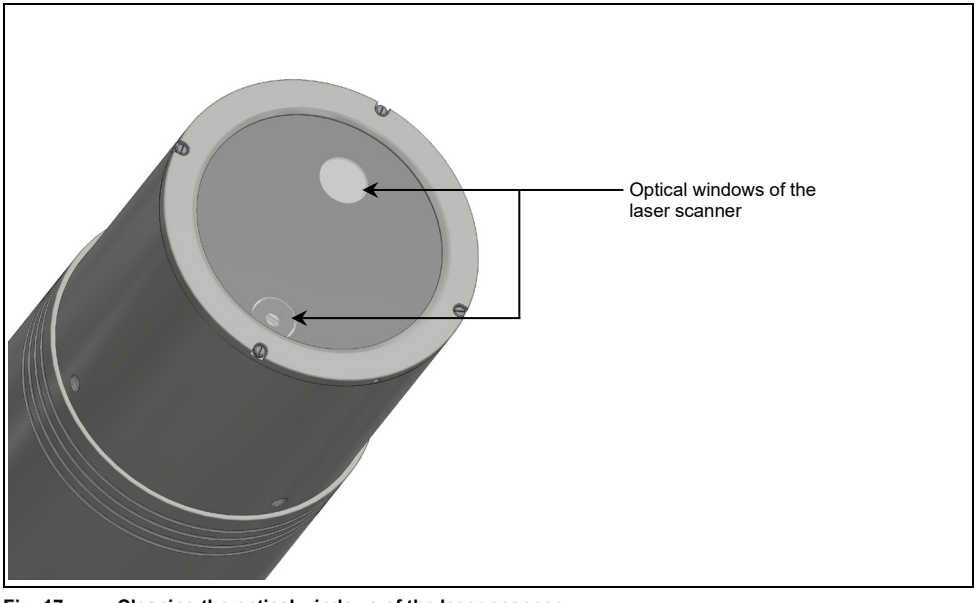


**Fig. 17 Cleaning the optical windows of the laser scanner**

## 2.7.2 Cleaning the calibration sphere

**NOTICE**

**Risk of incorrect calibration data caused by contamination**

Contamination on the calibration sphere may reduce the data quality.

- Do not touch the calibration sphere.
- If contamination is present, clean the calibration sphere before calibration.
- Do not use solvents or cleaners; they may damage the calibration sphere.

**NOTICE**

**Possible damage to the calibration sphere when cleaning**

The calibration sphere may be damaged if it comes into contact with other objects, e.g. when placed on a table. Vigorous rubbing when cleaning may damage the surface, which will affect the data quality.

- Avoid contact with other objects.
- Hold the calibration sphere only by the shaft when cleaning.
- Only rub gently when cleaning.

**Removing minor contaminants**

1. Hold the calibration sphere by the shaft with one hand.
2. Carefully wipe the calibration sphere using only light pressure with a clean, soft, lint-free micro-fibre cloth.

**Fig. 18 Dry cleaning the calibration sphere with a micro-fibre cloth**

**Removing grease deposits**

| NOTICE |
| --- |
| **Possible damage to the calibration sphere when cleaning**<br>The use of solvents or cleaners is **not** recommended, as they may damage the calibration sphere.<br>Light grease deposits can be removed with extreme care using a clean, soft, lint-free micro-fibre cloth and isopropyl alcohol.<br>However, any such cleaning is performed entirely at own risk. |

1. Moisten a micro-fibre cloth with isopropyl alcohol.
2. Hold the calibration sphere by the shaft with one hand.
3. Wipe the calibration sphere extremely carefully with the moistened cloth using only light pressure.
4. Carefully dry the calibration sphere using a dry micro fibre cloth.

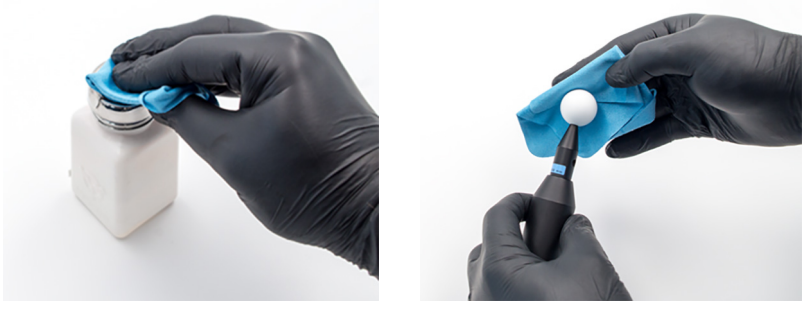

**Fig. 19 Wet cleaning the calibration sphere with isopropyl alcohol**

## 2.7.3 Inspection

A manufacturer inspection is recommended once a year. For further information, contact the service department at m&h Inprocess Messtechnik GmbH.

# EU Declaration of Conformity

This declaration of conformity is issued under the sole responsibility of m&h Inprocess Messtechnik GmbH.

| | |
|---|---|
| Manufacturer/ Representative: | **m&h Inprocess Messtechnik GmbH**<br>Am Langholz 11<br>88289 Waldburg<br>Germany |
| Product name: | **Radio-wave Laser Scanner** |
| Model / Type: | **LS-R-4.8** |

The product mentioned above meets the requirements of the following relevant directives / standards:

| Directive / Standard | Issue | Title / Section |
|---|---|---|
| 2011/65/EU | 2011 | Restriction of the use of certain hazardous substances in electrical and electronic equipment |
| 2014/53/EU | 2014 | Making radio equipment available on the market |
| 2014/30/EU | 2014 | Electromagnetic compatibility |
| 2006/25/EG | 2006 | Minimum health and safety requirements regarding the exposure of workers to risks arising from physical agents (artificial optical radiation) |
| EN 61326-1 | 2013 | Electrical equipment for measurement, control and laboratory use - EMC requirements - Part 1 |
| EN 61326-2-2 | 2013 | Electrical equipment for measurement, control and laboratory use - EMC requirements - Part 2-2 |
| EN 55011 | 2016 | Industrial, scientific and medical equipment - Radio-frequency disturbance characteristics - Limits and methods of measurement |
| ETSI EN 300328 | 2019 | Wideband transmission systems - Data transmission equipment operating in the 2,4 GHz ISM band and using wide band modulation techniques |
| ETSI EN 301489-1 | 2020 | ElectroMagnetic Compatibility (EMC) standard for radio equipment and services - Part 1 |
| ETSI EN 301489-3 | 2019 | ElectroMagnetic Compatibility (EMC) standard for radio equipment and services - Part 3 |
| ETSI EN 301489-17 | 2017 | ElectroMagnetic Compatibility (EMC) standard for radio equipment and services - Part 17 |
| EN ISO 12100 | 2010 | Safety of machinery - General principles for design - Risk assessment and risk reduction |
| EN 60825-1 | 2014 | Safety of laser products - Part 1: Equipment classification and requirements |
| EN 62368-1 | 2014 | Audio/video, information and communication technology equipment - Part 1: Safety requirements |

CE

Waldburg, 28.05.2021

Place, Date

Wolfgang Madlener, General Manager