HEXAGON

Operating Instructions EN

Touch probe with optical transmission

m&h TP-O-400

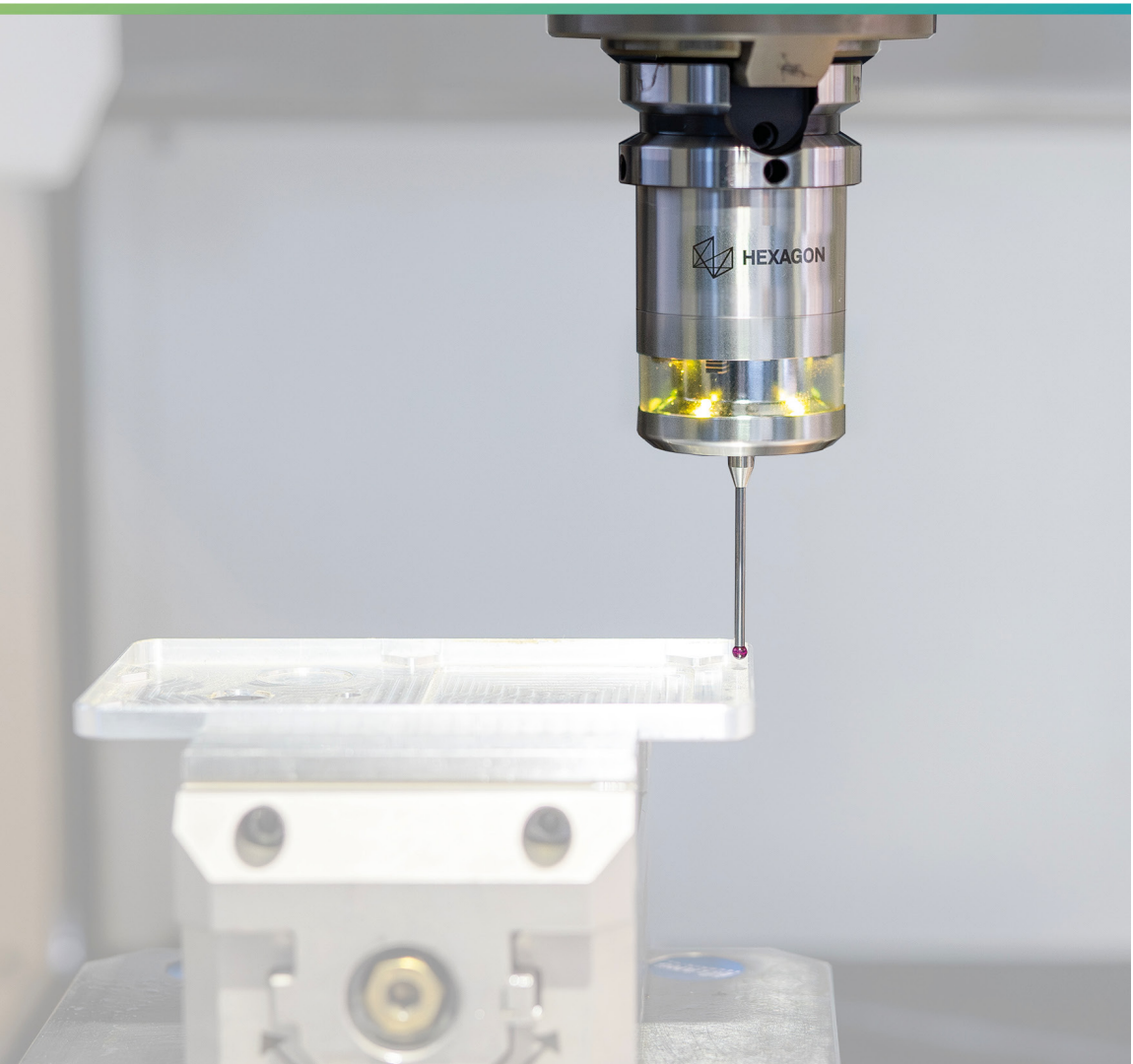

Revision REV01
Release Date 2025-02-19

Table of Contents

1 Description 4
1.1 General 4
1.1.1 Preface 4
1.1.2 Safety instructions 4
1.1.3 Validity 4
1.2 Purpose 4
1.3 Declarations and Approvals 5
1.3.1 Europe and UK (EU and UKCA Declaration of Conformity) 5
1.3.2 USA (FCC Declaration) 5
1.3.3 Canada (IC /RSS Declaration) 5
1.3.4 China 6
1.3.5 Japan 6
1.4 Maximum rated output power (EIRP) 6
1.5 System Components 7
1.6 Technical Data 8
1.7 Dimensions 9
1.8 Transmission and Reception Angles 10
1.8.1 Transmission Angles 10
1.8.2 Reception Angles 11
1.8.3 Adjusting the transmission/reception parameters 12
1.9 Delivery Contents, Accessories and Spares 13
1.9.1 Delivery contents 13
1.9.2 Styli 13
1.9.3 Tool holders 13
1.9.4 Accessories, General 13
1.9.5 Spare parts 13
2 Operation 14
2.1 Tools, Measurement and Test Equipment 14
2.2 Commissioning and Setup of the Touch Probe 15
2.2.1 Installing/Changing the Stylus 15
2.2.2 Mounting/dismounting the tool holder 16
2.2.2.1 Mounting tool holders CC11 16
2.2.2.2 Mounting tool holders Ø28 17
2.2.3 Inserting/Changing the Battery 18
2.2.4 Setting the Touch Probe and Transmitting Settings to the Receiver 19
2.2.5 Stylus runout adjustment 21
2.3 Optical Status Display 22
2.4 Maintenance and cleaning of the touch probe 23

1 Description

1.1 General

1.1.1 Preface

It is imperative that the safety information contained in these operating instructions is strictly observed to guarantee the safe and reliable operation of the touch probe and avoid personal injury and damage to property. The meaning of the symbols related to the safety instructions is described in the table below:

NOTICE	NOTICE indicates important information that, if not observed, could lead to property damage/malfunctions.
INFORMATION	INFORMATION indicates important information or helpful advices for the work with the described device.

1.1.2 Safety instructions

NOTICE

Risk of material damage!

- Manual or automatic positioning of the touch probe must be protected, in a way that the machine axis stops feeding if the probe is triggered outside the measuring process!

NOTICE

Risk of material damage!

- Feedhold or spindle-stop resulting from a trigger or ready signal from a touch probe should only happen if the probe is actually in the spindle. This safety logic prevents the spindle or feed being stopped during normal milling operations if a signal from a measuring probe is triggered due to battery replacement and subsequent functional check of the touch probe by manually switching it on.

NOTICE

Risk of material damage caused by third-party parts!

- Only use the original spare parts listed in these operating instructions to perform maintenance and repairs.

INFORMATION

The information given in this manual can be changed by the manufacturer at any time. Thus the user is responsible to regularly inquire about updated information.

1.1.3 Validity

These operating instructions are valid for the hardware available at the date of creation of these operating instructions. The manufacturer reserves the right to make technical modifications.

1.2 Purpose

The Touch Probe TP-O-400 is used for workpiece measurement, and automatic determination and compensation of deviating angular positions of workpieces. Moreover, it is used for setting zero points inside the machine tool.
The Touch Probe TP-O-400 is capable of measuring workpiece geometries like edges, bores, bosses, slots, webs, angles, corners and circular arches. It is also suitable for measuring complex geometries, like three-dimensional surfaces and for measurements involving pivot axes.
The measurement signals from the Touch Probe are transmitted to the receiver via infrared transmission.

1.3 Declarations and Approvals

All approvals were carried out with hardware H00048368 and software V01.00.

1.3.1 Europe and UK (EU and UKCA Declaration of Conformity)

The EU and UKCA Declarations of Conformity can be found at the end of these operating instructions.
If required, a copy of the signed original declarations of conformity may be requested from the address given on the back cover.

1.3.2 USA (FCC Declaration)

This equipment complies with FCC and IC radiation exposure limits set forth for an uncontrolled environment. This equipment should be installed and operated with a minimum distance of 20 cm from any body part of nearby persons.

This transmitter must not be co-located or operating in conjunction with any other antenna or transmitter.

This device complies with Part 15 of the FCC. Operation is subject to the following two conditions:

(1) This device may not cause harmful interference, and

(2) This device must accept any interference received, including interference that may cause undesired operation.

This device has been tested and found to comply with the limits for a Class A digital device, pursuant to Part 15 of the FCC Rules. These limits are designed to provide reasonable protection against harmful interference when the device is operated in a commercial environment. This device generates, uses, and can radiate radio frequency energy and, if not installed and used in accordance with the instruction manual, may cause harmful interference to radio communications. Operation of this device in a residential area is likely to cause harmful interference in which case the user will be required to correct the interference at his own expense.

Changes or modifications not expressly approved by Hexagon Metrology GmbH may void the FCC/RSS authorization to operate this equipment.

FCC ID: MFFO400

1.3.3 Canada (IC /RSS Declaration)

English:

This equipment complies with FCC and IC radiation exposure limits set forth for an uncontrolled environment. This equipment should be installed and operated with a minimum distance of 20 cm from any body part of nearby persons.

This transmitter must not be co-located or operating in conjunction with any other antenna or transmitter.

This device complies with Industry Canada licence-exempt RSS standard(s).
Operation is subject to the following two conditions:

(1) This device may not cause harmful interference, and

(2) This device must accept any interference received, including interference that may cause undesired operation.

IC: 5782A-O400

Français:

Cet équipement est conforme aux limites d’exposition aux radiations FCC et IC établies pour un environnement non contrôlé. Cet équipement doit être installé et utilisé à une distance minimale de 20 cm de toute partie du corps des personnes se trouvant à proximité.

Cet émetteur ne doit pas être installé ou fonctionner en conjonction avec une autre antenne ou un autre émetteur.

Le présent appareil est conforme aux CNR d'Industrie Canada applicables aux appareils radio exempts de licence. L'exploitation est autorisée aux deux conditions suivantes:

(1) l'appareil ne doit pas produire de brouillage, et

(2) l'appareil doit accepter tout brouillage radioélectrique subi, même si le brouillage est susceptible d'en compromettre le fonctionnement.

IC: 5782A-O400

1.3.4 China

This device has an RTA certificate (**R**adio Transmission Equipment **T**ype **A**pproval Certificate) issued by the SRRC (**S**tate **R**adio **R**egulatory **C**ommittee) for use in China.

CMIIT ID: XXXXXXXXXX

1.3.5 Japan

This device has a certificate issued by the Japanese MIC (**M**inistry of **I**nternal Affairs and **C**ommunications) for use in Japan. This certification complies with the Japanese Radio Law:

R 219-250006

1.4 Maximum rated output power (EIRP)

The maximum rated output power measured according to different regional measurement regulations can be found in the following table:

Region	Requirement	Maximum rated output power (average)
Europe	CE	13,5 dBm
USA/Canada	FCC/IC	9,5 dBm
China	RTA	?? dBm

1.5 System Components

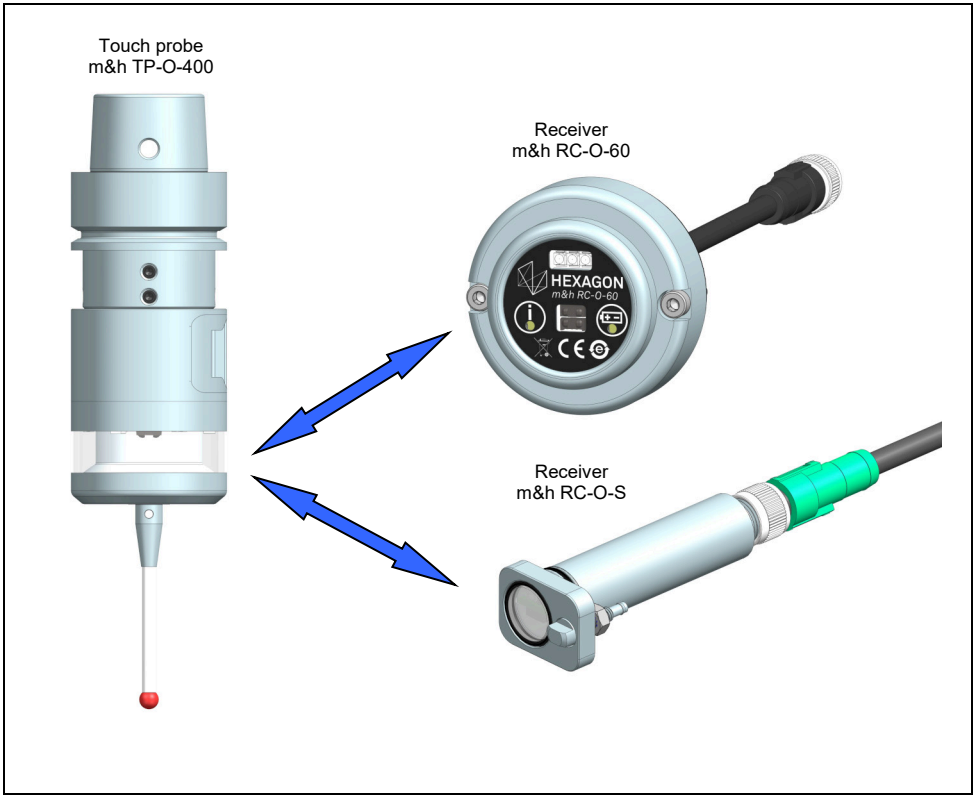

Fig. 1 System Components

1.6 Technical Data

Sensing Directions	±X; ±Y; -Z			
Max.Stylus Overtravel	XY = ±12.5°; Z = -5 mm			
Trigger Force with 50 mm Stylus	XY = 0.8 N; Z = 5.7 N			
Recommended probing feedrate	Max. 2000 mm/min			
Signal evaluation	HxPCM (Hexagon Pulse Code Modulation)			
Activation time from Standby	<100 ms			
Supply voltage	7.2 V DC			
Power supply	2x battery (3.6 V / ½ AA), standby 300 days			
Maximum battery lifetime (continuous operation)	Activation Sensitivity	Transmission Power	Probing	Battery lifetime
	High	*High*	every 2 s	800 h
	High	*Standard*	every 2 s	950 h
	High	*Eco*	every 2 s	1100 h
	Eco	*High*	every 2 s	900 h
	Eco	*Standard*	every 2 s	1050 h
	Eco	*Eco*	every 2 s	1200 h
	Eco	*Eco*	-	1300 h
Material	Stainless steel			
Weight without Tool holder	approx. 240 g			
Temperature range	Operation: 5°C - 55°C Storage: -25°C - 70°C			
Unidirectional Repeatability (deflection from one direction)	max. 0.5 µm (2 Sigma) with 50 mm stylus and 254 mm/min probing feedrate			
Sealing	IP68			
Load resonant frequency	Test passed			
Bluetooth technology	Bluetooth Low Energy (BLE)			
Bluetooth standard	BLE 1M PHY (1Mbit/s)			
Operational frequency band	2.4 GHz ISM band (2400-2483.5 MHz)			
Operational carrier frequency	2402-2480 MHz			

1.7 Dimensions

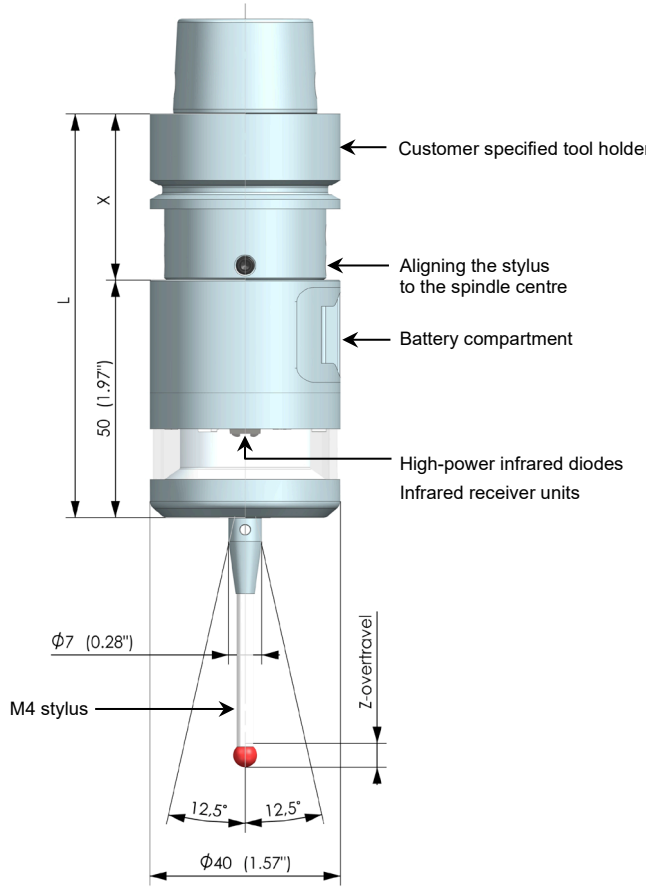

Fig. 2 **Dimensions**

INFORMATION
The dimension X for the length of the tool holder, required to calculate the total length L of the probe system, can be found in the accessories catalogue. The total length L is the sum of the probe length and the dimension X.

1.8 Transmission and Reception Angles

INFORMATION
The transmission/reception ranges shown below may be reduced by infrared proportions of ambient light.

1.8.1 Transmission Angles

INFORMATION
The transmission power of the TP-O-400 touch probe can be set in 3 levels (**"Eco"**, **"Standard"**, **"High"**) using the **"Transmission Power"** parameter (refer to chapter 2.2.4). For trouble-free operation, it is recommended to observe the specified maximum distances between touch probe and receiver (refer to Fig. 3).

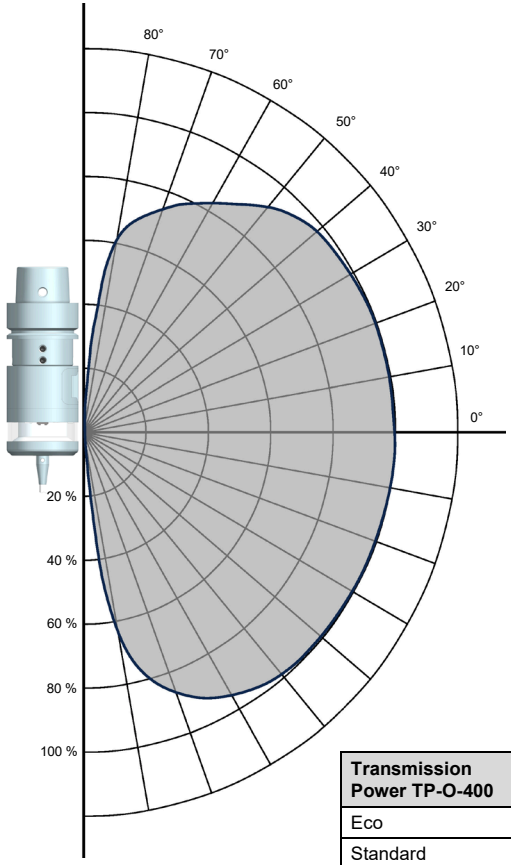

Transmission Power TP-O-400	Maximum distance (100%)
Eco	3 m
Standard	5 m
High	7 m

Fig. 3 Transmission angles of TP-O-400

1.8.2 Reception Angles

INFORMATION
The reception sensitivity of the TP-O-400 touch probe for activation/deactivation can be set in 2 levels (**"Eco"**, **"High"**) using the **"Activation Sensitivity"** parameter (refer to chapter 2.2.4). For trouble-free operation, it is recommended to observe the specified maximum distances between touch probe and receiver (refer to Fig. 4). The maximum distances depend on the receiver used.

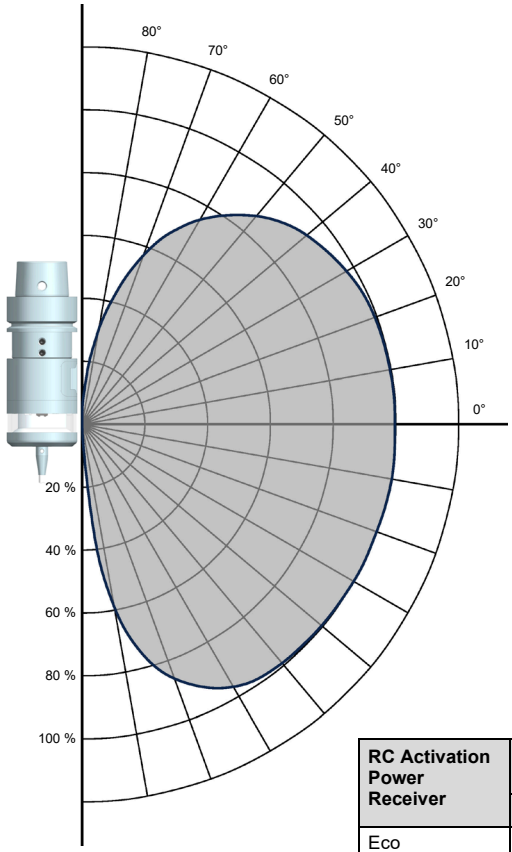

RC Activation Power Receiver	Maximum distance (100%)	
	RC-O-S	RC-O-60
Eco	2 m	3 m
Standard	4,5 m	5 m
High	6 m	7 m
If **"Activation Sensitivity = High"** is selected, the specified maximum distances increase by approx. 20%.		

Fig. 4 Reception angles of TP-O-400

1.8.3 Adjusting the transmission/reception parameters

INFORMATION
Changes to the transmission/reception parameters affect the behavior of the overall system (interference with neighbouring systems, battery lifetime, transmission behaviour) and should therefore only be carried out in case of transmission or activation problems.

The default factory settings of the transmission and reception parameters of the TP-O-400 touch probe and the associated receivers (RC-O-60 / RC-O-S) are suitable for most of the possible applications.
If adjustments are nevertheless required or desired in special cases, the settings described below can be made:

	Touch probe settings					**Receiver settings**		
	Transmission Power			Activation Sensitivity		RC Activation Power		
Need for adjustment	Eco	Standard	High	Eco	High	Eco	Standard	High
Activation/ deactivation range				o	+	-	o	+
Operation range (Status signals from touch probe)	-	o	+					
Battery lifetime	+	o	-	o	-			
Crosstalk prevention (avoiding feedback to systems in the near field)						+	o	-

o Factory setting
\+ Increase
\- Reduction

1.9 Delivery Contents, Accessories and Spares

INFORMATION
A variety of different accessories, such as extensions, styli and adapters are available for Hexagon Metrology touch probes. An overview of possible options for each system and any limitations can be found in the accessories catalogue.

1.9.1 Delivery contents

Order number	Description
TP-O-400#	Touch probe with optical transmission m&h TP-O-400

1.9.2 Styli

A variety of different styli, extensions and stylus adapters are available for Hexagon Metrology touch probes. It is possible to adapt the touch probe system to a wide range of use cases. A comprehensive overview of the possible stylus options can be found in the accessories catalogue.

1.9.3 Tool holders

A variety of different tool holders is available for Hexagon Metrology touch probes. It is possible to adapt the touch probe system to a wide range of use cases. An comprehensive overview of possible tool holders can be found in the accessories catalogue.

1.9.4 Accessories, General

Order number	Description	Illustration
H00062028	Modular adapter CC11/D28 (CC11/Ø28)	

1.9.5 Spare parts

Order number	Description	Illustration
4316	Battery (3.6 V, ½ AA)	
H00047956	Battery compartment	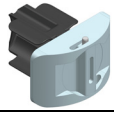
H00019529	Clamping screw M4x8 (AF2 mm)	
H00057628	Adjustment screw M4x8 (AF2 mm)	
H00048406	Service cover	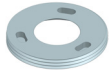
H00055079	26x1 O-ring for service cover	

2 Operation

2.1 Tools, Measurement and Test Equipment

Order number	Description	Illustration
0885	Mounting pin	
1097	Hexagon key AF2 mm	
3489	Hexagon key AF4 mm	
H00062176	Assembly key for service cover and battery cover	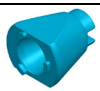
3079	Dial gauge	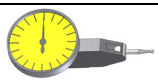
TP-O-400-TB	Tool box 2x Battery (3.6 V / ½AA) (4316) 1x Mounting pin (0885) 2x Hexagon key AF2 mm (1097) 1x Assembly key for service cover (H00062176)	Not illustrated

2.2 Commissioning and Setup of the Touch Probe

2.2.1 Installing/Changing the Stylus

1. Unscrew the stylus from the touch probe using the mounting pin.
2. Carefully screw the new stylus with mounting pin into the touch probe (Fig. 5).
3. Align the stylus to spindle center (refer to chapter 2.2.5).
4. Calibrate the touch probe.

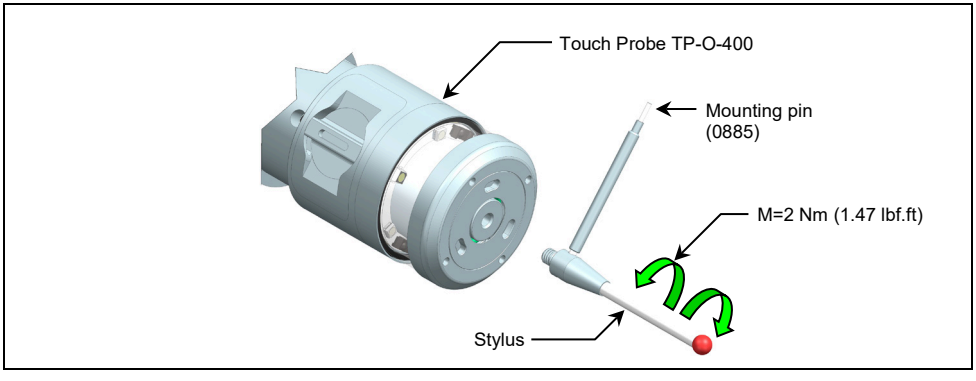

Fig. 5 Stylus Change

2.2.2 Mounting/dismounting the tool holder

2.2.2.1 Mounting tool holders CC11

1. Dismantling the tool holder:
   1.1 Loosen all screws, clamping screws and adjustment screws according to Fig. 6.
   1.2 Remove tool holder
2. Mounting the tool holder:
   2.1 Carefully slide the tool holder onto the probe.
   2.2 Insert both clamping screws and tighten lightly.
   2.3 Insert all adjustment screws and tighten lightly.
3. Align the stylus to spindle center (refer to chapter 2.2.5).
4. Calibrate the touch probe.

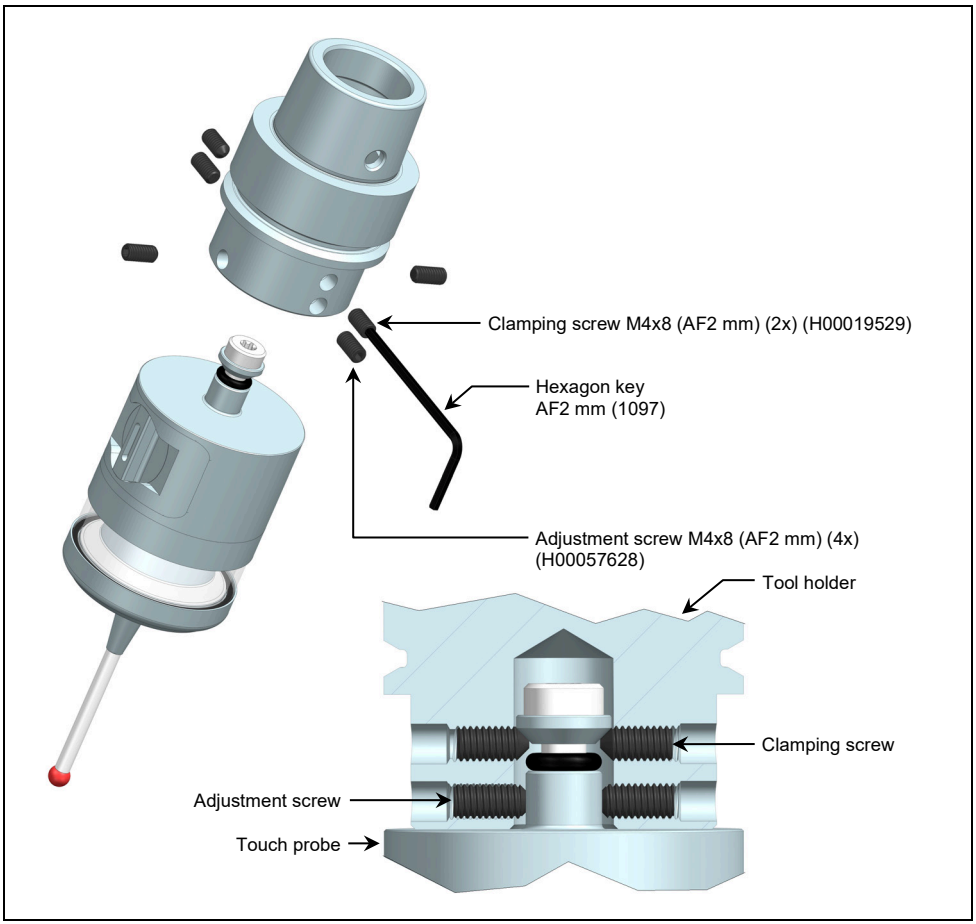

Fig. 6 Mounting/dismounting the tool holder

2.2.2.2 Mounting tool holders Ø28

1. Dismantling the tool holder:
   1.1 Remove clamping screws from the tool holder.
   1.2 Remove tool holder.
   1.3 Loosen all clamping screws and adjustment screws according to Fig. 7 in the modular adapter.
   1.4 Remove modular adapter from touch probe.
2. Mounting the tool holder:
   2.1 Carefully slide the modular adapter onto the probe.
   2.2 Insert both clamping screws and tighten lightly.
   2.3 Insert all adjustment screws and tighten lightly.
   2.4 Slide the tool holder onto the modular adapter.
   2.5 Insert the clamping screws and tighten to the torque specified in Fig. 7.
3. Align the stylus to spindle center (refer to chapter 2.2.5).
4. Calibrate the touch probe.

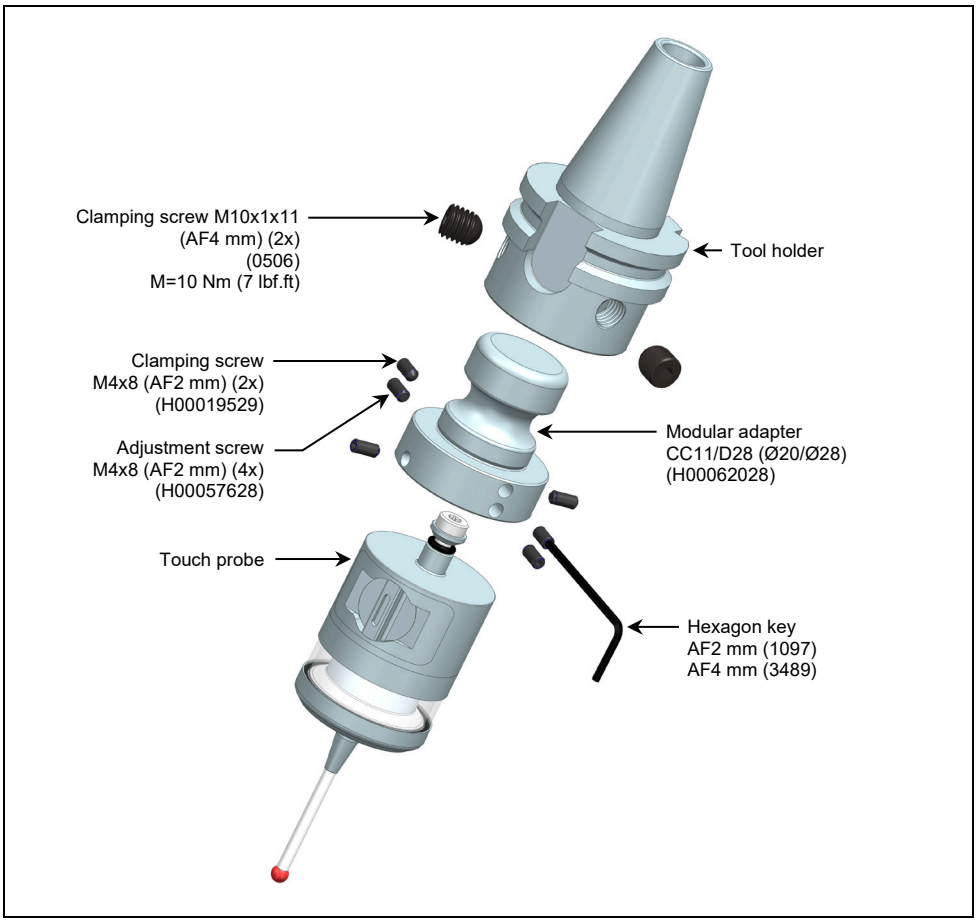

Fig. 7 Mounting/dismounting the tool holder

2.2.3 Inserting/Changing the Battery

NOTICE

Risk of damage to the equipment!

- Clean and dry the probe well before opening!
- Do not use compressed air to clean the touch probe!
- Replace empty battery immediately!

1. Turn counter-clockwise to lock the battery compartment by hand or with the assembly key for service covers and battery covers (H00062176) then remove the battery compartment from the touch probe housing.
2. Remove the used batteries.

NOTICE

Risk of damage to the equipment!

- When closing the battery compartment, ensure the O-ring is properly seated and in faultless condition!

3. Insert new batteries alternately into the battery compartment and insert the battery cover into the housing.
4. Turn the battery cover lock clockwise to lock the battery compartment.
   ▶ After insertion or replacement of the battery, the touch probe initialises for approx. 10 s. The LEDs illuminate in blue during this time.

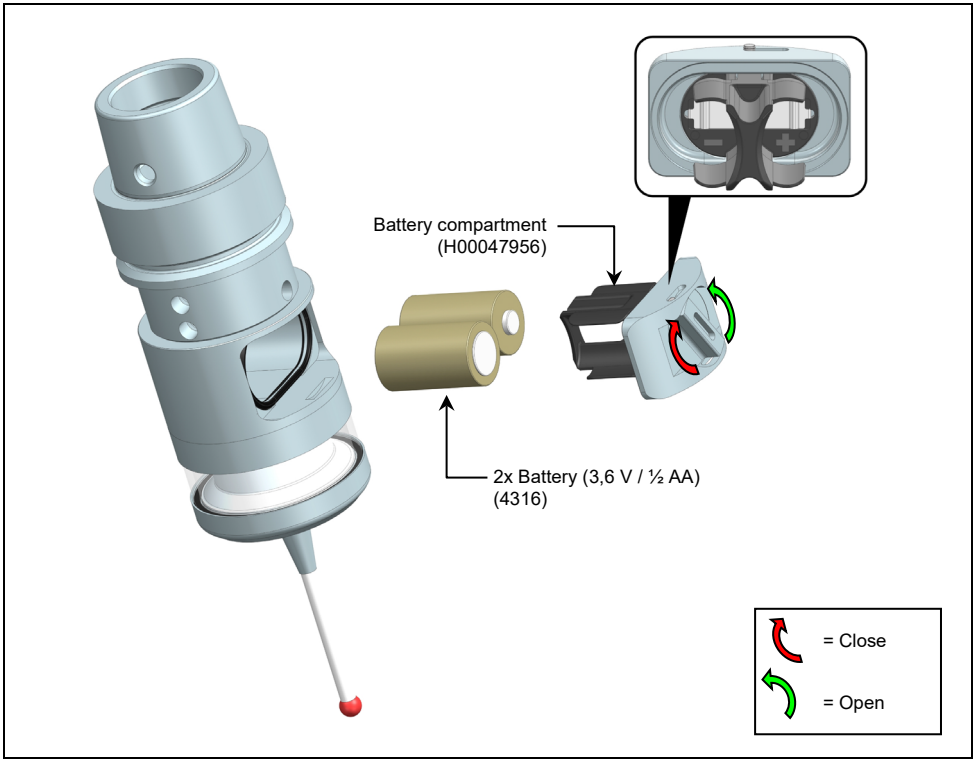

Fig. 8 Replacing batteries

2.2.4 Setting the Touch Probe and Transmitting Settings to the Receiver

All settings for the behaviour of the touch probe and the associated receiver are made via the "HexPI" application **(available in the Microsoft store)** on a PC and transmitted to touch probe TP-O-400 via Bluetooth connection.
When activating the touch probe for the first time through a type RC-O-60 or RC-O-S receiver RC-O-S using the activation code (A, B, C) set on the touch probe, these settings are transmitted to the receiver via the infrared connection.
After successful transmission of the settings, the "Status" LED on the receiver lights up blue for approx. 1 s.

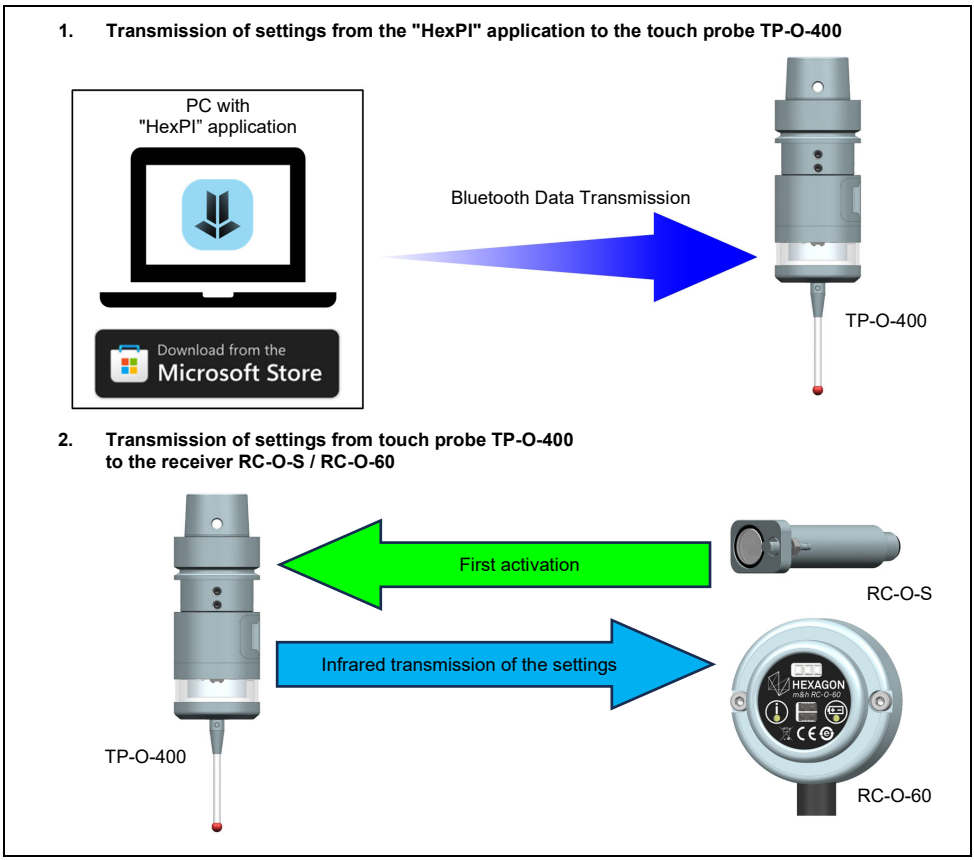

Abb. 1 Adjusting the Output Signals

Touch probe settings:

Setting	Description	Settings
Activation Code	The **"Activation Code"** setting is used to assign the activation code that will be used to activate the touch probe via the associated receiver.	A, B, C
Activation Sensitivity	The **"Activation Sensitivity"** setting is used to to adjust the reception sensitivity of the touch probe. When this parameter is set to the **"High"** value, the transmission sensitivity of the touch probe increases, but this results in a shorter battery life. By default, this setting is set to the **"Eco"** value and should only be set to **"High"** in case of activation problems.	Eco, High
Transmission Power	The **"Transmission Power"** setting is used to adjust the infrared transmission power of the touch probe. Higher transmission powers shorten the battery life of the touch probe.	Eco, Standard, High
Auto Off Time	The **"Auto Off Time"** setting is used to define the time for automatic deactivation of the touch probe when not in use (no probing signal within the specified time range).	3 min, 60 min, Off
Z Crash Display	The **"Z Crash Display"** setting is used to define whether an optical signal (LEDs flashing blue) should be displayed if the touch probe has previously had a crash in the Z probing direction and how this should be displayed. In the **"Active"** setting, a Z crash is displayed continuously when the touch probe is ready. In the **"Startup"** setting, the display appears only shortly after inserting the batteries. If the **"Off"** setting is selected, there is no optical display, but the crash is still saved in the touch probe.	Active, Startup, Off

Receiver settings:

Setting	Description	Settings
RC Activation Power	The **"RC Activation Power"** setting is used to adjust the receiver infrared transmission power for activation of the touch probe.	Eco, Standard, High
RC Output Setup	The **"RC Output Setup"** setting is used to adjust the behaviour of the output signals of the receiver to different machine controls. A detailed list of possible settings can be found in the operating instructions of the relevant receiver.	(0 … F)
RC Config Transfer	The **"RC Config Transfer"** setting is used to define whether the saved settings should be transmitted to the receiver when activating the touch probe for the first time.	Active, Off

2.2.5 Stylus runout adjustment

1. Loosen clamping screws (2x) then re-tighten with moderate force.
2. Place the dial gauge against the tip of the stylus and rotate the touch probe by hand around the stylus axis.
3. Adjust the touch probe with the adjustment screws (4x) to less than 10 µm.
4. Tighten clamping screws (2x) to the torque specified in (Fig. 9).
5. Adjust the touch probe with the adjustment screws (4x) to less than 5 µm and tighten them to the torque specified in (Fig. 9).
6. Check the alignment of the stylus.
7. Remove the dial gauge.
8. Calibrate the touch probe.

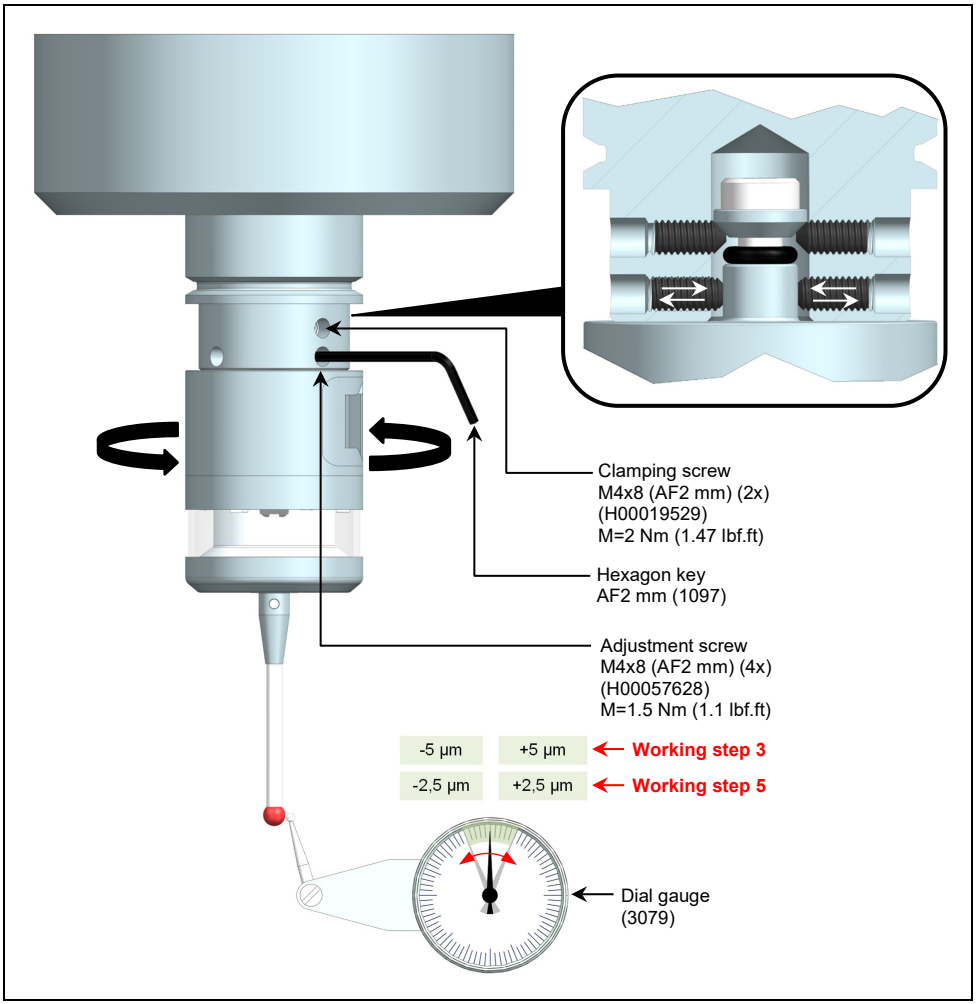

Fig. 9 **Stylus runout adjustment (T)**

2.3 Optical Status Display

The following table gives an overview of the blinking patterns of the LEDs (Fig. 10) and their meaning.

Status	Status
Initialization after inserting batteries (10 s after start)	
Touch probe is transmitting signals Status: "READY"	
Touch probe is transmitting signals + Low battery Status: "READY" + "LOW BATTERY"	
Stylus deflected Status: "PROBE"	
Stylus deflected + Low battery Status: "PROBE" + "LOW BATTERY"	
Error Status: "ERROR"	
Touch probe crash in Z probing direction (Z Crash)* Status: "READY"	
Touch probe crash in Z probing direction (Z Crash)* + Low Battery Status: "READY" + "LOW BATTERY"	

* Display of a previous collision of the touch probe in the Z probing direction if the **"Z Crash Display"** setting on the probe was set to **"Startup"** or **"Active"** (refer to chapter 2.2.4).

NOTICE

Risk of measurement inaccuracy!

After a touch probe crash in Z probing direction, the basic measuring functions continue to be available. In this case, however, the original accuracy can no longer be guaranteed. It is recommended that the touch probe is returned to the manufacturer for checking/repair after a Z crash!

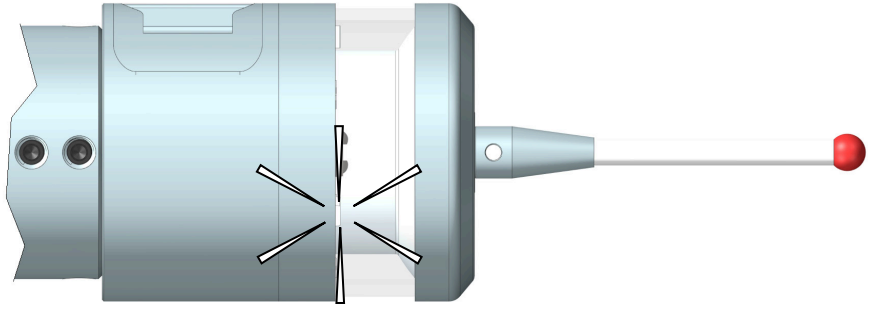

Fig. 10 Optical Status Display

2.4 Maintenance and cleaning of the touch probe

NOTICE

Risk of damage to the equipment!

- Clean and dry the probe well before opening!
- Do NOT clean with compressed air or high pressure water!
- Do NOT use any sharp tools (these could damage the inner seal)!

1. Unscrew the stylus.

INFORMATION

Dirt can collect under the service cover.

2. Unscrew the service cover using the assembly key (H00062176).
3. Clean the touch probe and components under running water.
4. Reassemble all parts.
5. Align the stylus to spindle centre.
6. Calibrate the probe!

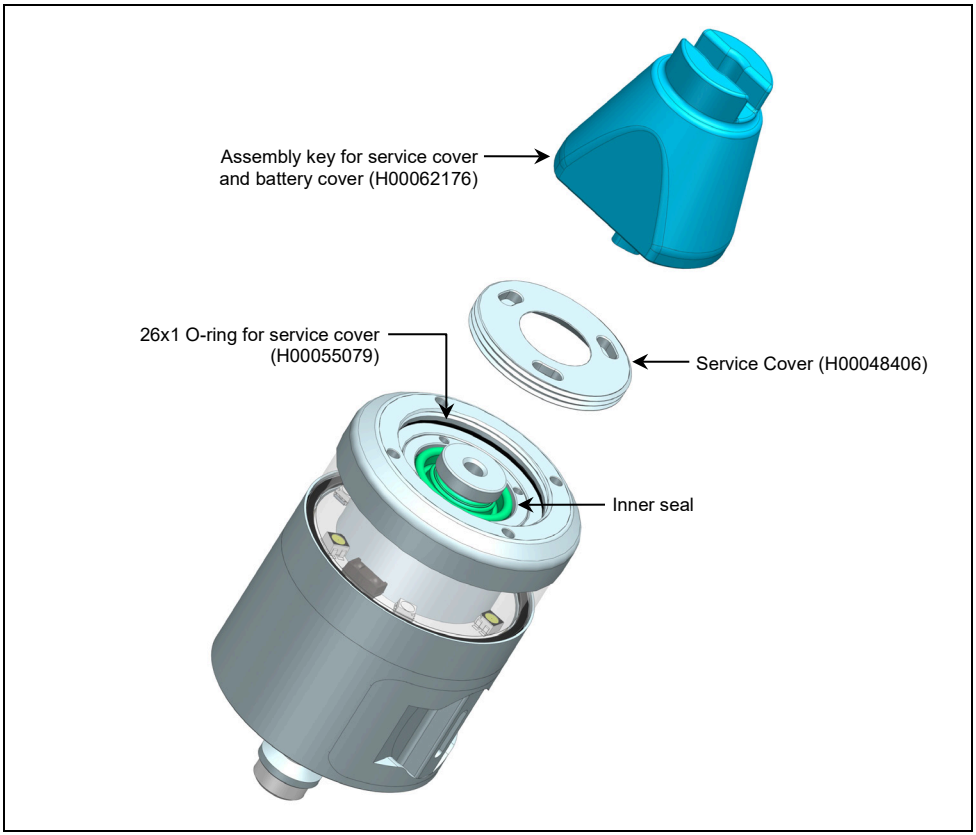

Fig. 11 Maintenance and cleaning of the touch probe TP-O-400

EU Declaration of Conformity

This declaration of conformity is issued under the sole responsibility of Hexagon Metrology GmbH.

Manufacturer/ Representative:	**Hexagon Metrology GmbH** Siegmund-Hiepe-Str. 2-12 35578 Wetzlar Germany
Product name:	**Touch probe with optical transmission**
Model / Type:	**TP-O-400**

The product mentioned above meets the requirements of the following relevant directives / standards:

Directive / Standard	**Title / Section**
2011/65/EU	Restriction of the use of certain hazardous substances in electrical and electronic equipment
2014/53/EU	Making radio equipment available on the market
EN 300328 V2.2.2	Wideband transmission systems - Data transmission equipment operating in the 2,4 GHz ISM band and using wide band modulation techniques
EN 301489-1 V2.2.3	ElectroMagnetic Compatibility (EMC) standard for radio equipment and services - Part 1 - Common technical requirements
EN 301489-17 V3.3.1	ElectroMagnetic Compatibility (EMC) standard for radio equipment and services - Part 17 - Specific conditions for Broadband Data Transmission Systems
DIN EN 62368-1: 2014 / AC:2015 / COR1:2016 / COR2:2017 / A11:2017 / AC:2017	Audio/video, information and communication technology equipment - Part 1: Safety requirements
DIN EN IEC 62311:2020-12 VDE 0848-311:2020-12	Assessment of electronic and electrical equipment related to human exposure restrictions for electromagnetic fields (0 Hz to 300 GHz)

The notified body KL-Certification GmbH with number 2784 performed the evaluation of article 3.1 and 3.2 requirements with Annex III of the directive and issued the EU-type examination certificate.

CE

Waldburg, 04.02.2025

Place, Date

Norbert Goldau, General Manager

Machine Tool Measurement
Hexagon Metrology GmbH
Operating Facility Waldburg
Am Langholz 11
88289 Waldburg
Germany

Tel. +49 (0)7529 9733 0
Fax +49 (0)7529 9733 7
sales.mtm@hexagon.com
hexagon.com