HEXAGON

Operating Instructions

m&h Radio-wave Touch Probe

TP-R-400

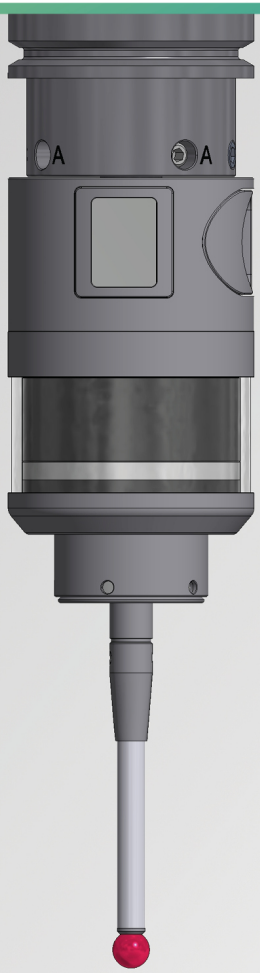

LANGUAGE	DESCRIPTION	PAGE
DE	BETRIEBSANLEITUNG	3
EN	OPERATING INSTRUCTIONS	
FR	MANUEL D’INSTRUCTION	
IT	ISTRUZIONI OPERATIVE	
ES	INSTRUCCIONES DE OPERACIÓN	

Manual Version V01.00-REV01.00
Release Date 2021-09-29

Table of Contents

1 Description ... 5
1.1 General ... 5
1.1.1 Preface ... 5
1.1.2 Safety Instructions ... 5
1.1.3 Validity ... 5
1.2 Purpose ... 6
1.3 Declarations and Approvals ... 7
1.3.1 Europe and UK (EU and UKCA Declaration of Conformity) ... 7
1.3.2 USA (FCC Declaration) ... 7
1.3.3 Canada (IC /RSS Declaration) ... 7
1.3.4 China ... 7
1.3.5 Japan ... 7
1.4 System Components ... 8
1.5 Variant Overview ... 9
1.6 Technical Data ... 10
1.6.1 Technical Data, General (all Measuring Units) ... 10
1.6.2 Technical Data with Measuring Unit MY21.00 ... 10
1.6.3 Technical Data with Measuring Unit PP41.00 ... 10
1.6.4 Technical Data with Measuring Unit HPP41.10 ... 10
1.7 Dimensions ... 11
1.7.1 Dimensions with Measuring Unit MY21.00 ... 11
1.7.2 Dimensions with Measuring Unit PP41.00 ... 12
1.7.3 Dimensions with Precision Measuring Unit HPP41.10 ... 13
1.8 Transmission and Reception Area ... 14
1.9 Delivery Contents, Accessories and Spares ... 15
1.9.1 Delivery Contents ... 15
1.9.2 Styli ... 15
1.9.3 Tool holders ... 15
1.9.4 Accessories, General ... 16
1.9.5 Spares ... 17
2 Operation ... 18
2.1 Tools, Measurement and Test Equipment ... 18
2.2 Commissioning and Setup of the Touch Probe ... 19
2.2.1 Installing/Changing the Stylus ... 19
2.2.1.1 Installing/Changing the Stylus (Measuring Unit MY21.00) ... 19
2.2.1.2 Installing/Changing the Stylus (Measuring Unit PP41.00/HPP41.10) ... 20
2.2.2 Mounting/dismounting the tool holder ... 21
2.2.2.1 Mounting tool holders Ø20 ... 21
2.2.2.2 Mounting tool holders Ø28 ... 22
2.2.3 Inserting/Changing the Battery ... 23
2.2.4 Setting the Touch Probe and pairing with a Receiver ... 24
2.2.4.1 Menu Structure ... 24
2.2.4.2 Operating the menu ... 25
2.2.4.3 Possible settings in the "Setup” menu ... 26
2.2.4.4 Setting Procedure ... 26

2.2.5 Aligning Stylus to Spindle Centre 28
2.2.6 Adjusting the touch probe in the tool holder with a 90° adapter 29
2.3 Optical Status Display 30
2.4 Replacing Measuring Unit 31
2.5 Force setting (Measuring Unit PP41.00 only) 32
2.6 Maintenance and Cleaning (Measuring Unit PP41.00 only) 33
2.7 Modular System (for Measuring Units PP41.00 and MY21.00 only) 34

1 Description

1.1 General

1.1.1 Preface

The safety instructions in this manual have to be strictly observed to guarantee a safe and reliable function of the touch probe and to avoid personal and material damage. The meaning of the symbols related to the safety instructions is described in the table below:

NOTICE	NOTICE indicates important information that, if not observed, could lead to property damage/malfunctions.
INFORMATION	INFORMATION indicates important information or helpful advices for the work with the described device.

1.1.2 Safety Instructions

NOTICE

Risk of material damage!

- Manual or automatic positioning of the touch probe must be protected, in a way that the machine axis stops feeding if the probe is triggered outside the measuring process!

NOTICE

Risk of material damage!

- Feedhold or spindle-stop resulting from a trigger or ready signal from a touch probe should only happen if the probe is actually in the spindle. This safety logic prevents the spindle or feed being stopped during normal milling operations if a signal from a measuring probe is triggered for one of the following reasons:
  - Battery replacement and subsequent functional check of the touch probe by manually switching it on.
  - Another machine with a radio-wave touch probe installed is started up and this touch probe transmits on the same channel as a touch probe previously installed.

NOTICE

Risk of material damage caused by third-party parts!

- Only use the original spare parts listed in these operating instructions to perform maintenance and repairs.

INFORMATION

The information given in this manual can be changed by the manufacturer at any time. Thus the user is responsible to regularly inquire about updated information.

1.1.3 Validity

These operating instructions are valid for the hardware available at the date of creation of these operating instructions. The manufacturer reserves the right to make technical modifications.

1.2 Purpose

The radio-wave touch probe TP-R-400 is used for workpiece measurement, and automatic determination and compensation of deviating angular positions of workpieces. Moreover, it is used for setting zero points inside the machine tool.
The radio-wave touch probe TP-R-400 is capable of measuring workpiece geometries, like edges, bores, pins, slots, webs, angles, corners and circular arches. It is also suitable for measuring complex geometries, like three-dimensional surfaces and for measurements involving picot axes.
Radio-wave transmission ensures that the measuring signals from the touch probe can be transmitted to the receiver over large distances.

1.3 Declarations and Approvals

1.3.1 Europe and UK (EU and UKCA Declaration of Conformity)

The EU and UKCA Declarations of Conformity can be found at the end of these operating instructions.
If required, a copy of the signed original declarations of conformity may be requested from the address given on the back cover.

1.3.2 USA (FCC Declaration)

This device complies with Part 15 of the FCC. Operation is subject to the following two conditions:

(1) This device may not cause harmful interference, and

(2) This device must accept any interference received, including interference that may cause undesired operation.

This device has been tested and found to comply with the limits for a Class A digital device, pursuant to Part 15 of the FCC Rules. These limits are designed to provide reasonable protection against harmful interference when the device is operated in a commercial environment. This device generates, uses, and can radiate radio frequency energy and, if not installed and used in accordance with the instruction manual, may cause harmful interference to radio communications. Operation of this device in a residential area is likely to cause harmful interference in which case the user will be required to correct the interference at his own expense.

The radiated output power of the device is far below the FCC radio frequency exposure limits. Nevertheless, the device shall be used in such a manner that the potential for human contact during normal operation is minimized.

Changes or modifications not expressly approved by m&h Inprocess Messtechnik GmbH may void the FCC/RSS authorization to operate this equipment.

FCC ID: MFFR400

1.3.3 Canada (IC /RSS Declaration)

English:

This device complies with Industry Canada licence-exempt RSS standard(s).
Operation is subject to the following two conditions:

(1) This device may not cause harmful interference, and

(2) This device must accept any interference received, including interference that may cause undesired operation.

IC: 5782A-R400

Français:

Le présent appareil est conforme aux CNR d'Industrie Canada applicables aux appareils radio exempts de licence.
L'exploitation est autorisée aux deux conditions suivantes:

(1) l'appareil ne doit pas produire de brouillage, et

(2) l'appareil doit accepter tout brouillage radioélectrique subi, même si le brouillage est susceptible d'en compromettre le fonctionnement.

IC: 5782A-R400

1.3.4 China

This device has an RTA certificate (**R**adio Transmission Equipment **T**ype **A**pproval Certificate) issued by the SRRC (**S**tate **R**adio **R**egulatory **C**ommittee) for use in China.

CMIIT ID: XXXXXXXXXX

1.3.5 Japan

This device has a certificate issued by the Japanese MIC (**M**inistry of **I**nternal Affairs and **C**ommunications) for use in Japan. This certification complies with the Japanese Radio Law:

R 202-DGJ094

1.4 System Components

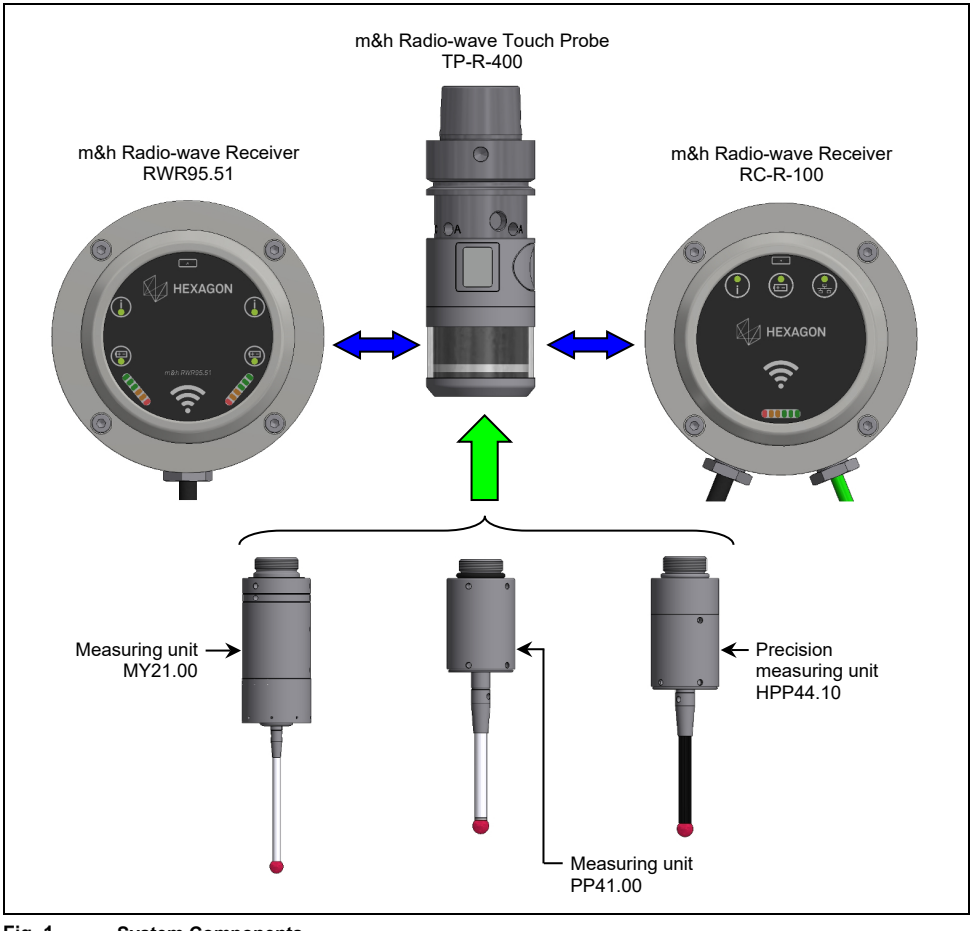

Fig. 1 System Components

1.5 Variant Overview

TP-R-400-MY#	TP-R-400-PP#	TP-R-400-HPP#
Measuring unit MY21.00	Measuring unit PP41.00	Precision measuring unit HPP44.10
		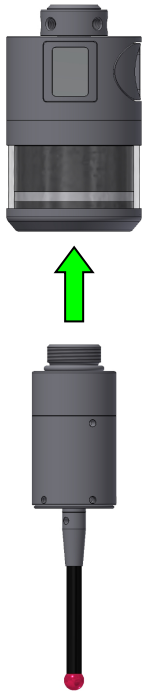

1.6 Technical Data

1.6.1 Technical Data, General (all Measuring Units)

Transmission frequency	2400-2483.5 MHz (2.4 GHz)
Transmission/reception range	Up to 18 m
Power supply	2x battery (3.6 V / ½ AA)
Material	Stainless steel, POM
Temperature range	Operation: 10°C - 50°C, Storage: -20°C - 70°C
Sealing	IP68: EN60529

1.6.2 Technical Data with Measuring Unit MY21.00

Sensing Directions	±X; ±Y; -Z
Maximum Stylus Overtravel	XY = ±14°; Z = -4.5 mm
Trigger Force with 50 mm Stylus	XY = 1 N Z = 6 N
Recommended Probing Feedrate	max. 2000 mm/min
Unidirectional Repeatability (deflection from one direction)	max. 1 µm (2 Sigma) with 50 mm stylus and 254 mm/min probing feedrate
Weight TP-R-400-MY without tool holder	approx. 365 g
Maximum Battery Life with Lithium Battery	Operation: 300 h Standby: 12 months

1.6.3 Technical Data with Measuring Unit PP41.00

Sensing Directions	±X; ±Y; -Z
Maximum Stylus Overtravel	XY = ±12.5°; Z = -6 mm
Trigger Force with 50 mm Stylus	XY = 0.3 - 1.4 N (factory setting = 1 N) Z = 2.5 - 12.5 N (factory setting = 8.5 N)
Recommended Probing Feedrate	max. 2000 mm/min
Unidirectional Repeatability (deflection from one direction)	max. 1 µm (2 Sigma) with 50 mm stylus and 254 mm/min probing feedrate
Weight TP-R-400-PP without tool holder	approx. 320 g
Maximum Battery Life with Lithium Battery	Operation: 300 h Standby: 12 months

1.6.4 Technical Data with Measuring Unit HPP41.10

Sensing Directions	±X; ±Y; -Z
Maximum Stylus Overtravel	XY = ±12.5°; Z = -5 mm
Tripping force* with 50 mm stylus	XY = 0.1 N (typical value) Z = 2.5 N (typical value)
Trigger force* with 50 mm stylus (probing feedrate 254 mm/min)	XY = 0.75 ±0.25 N Z = 7 N ±10%
Recommended Probing Feedrate	100 - 500 mm/min
Maximum Probing Feedrate	1000 mm/min
Unidirectional Repeatability (deflection from one direction)	max. 0.25 µm (2 Sigma) with 50 mm stylus and 254 mm/min probing feedrate
Weight TP-R-400-HPP without tool holder	approx. 325 g
Maximum Battery Life with Lithium Battery	Operation: 110 h Standby: 12 months
* Tripping force = Force when the probing signal is tripped at the touch point not influenced by the machine dynamics (stops without delay when the touch point is reached) Trigger force = Force after passing the touch point influenced by the machine dynamics (positioning speed, delay)	

1.7 Dimensions

1.7.1 Dimensions with Measuring Unit MY21.00

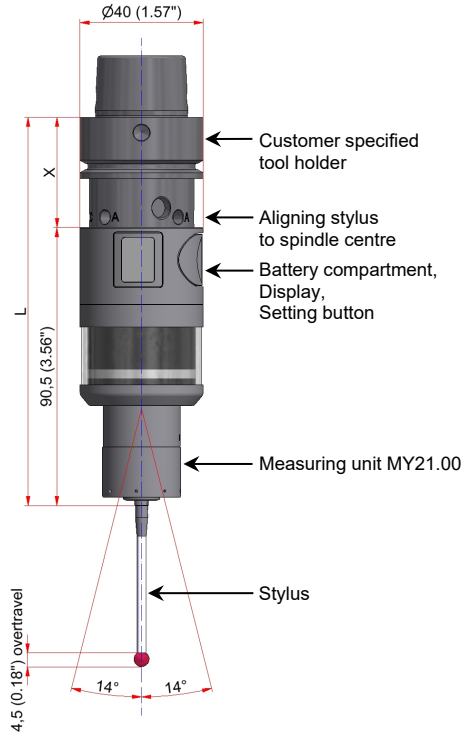

Fig. 2 Dimensions with Measuring Unit MY21.00

INFORMATION
The dimension X for the length of the tool holder, required to calculate the total length L of the probe system, can be found in the accessories catalogue. The total length L is the sum of the probe length and the dimension X.

1.7.2 Dimensions with Measuring Unit PP41.00

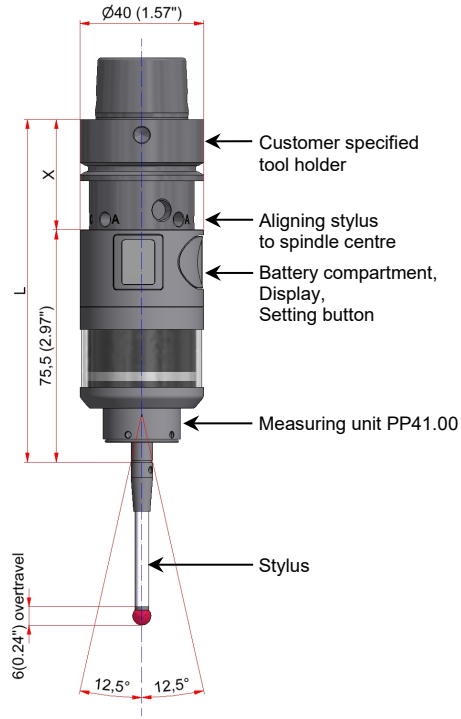

Fig. 3 Dimensions with Measuring Unit PP41.00

INFORMATION
The dimension X for the length of the tool holder, required to calculate the total length L of the probe system, can be found in the accessories catalogue. The total length L is the sum of the probe length and the dimension X.

1.7.3 Dimensions with Precision Measuring Unit HPP41.10

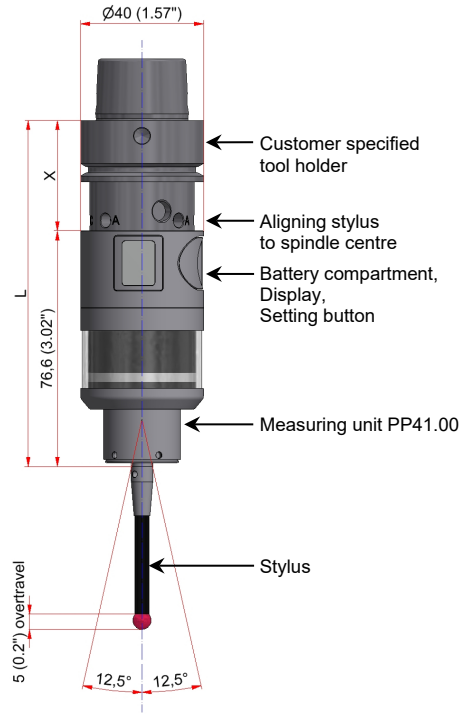

Fig. 4 Dimensions with Measuring Unit HPP41.10

INFORMATION
The dimension X for the length of the tool holder, required to calculate the total length L of the probe system, can be found in the accessories catalogue. The total length L is the sum of the probe length and the dimension X.

1.8 Transmission and Reception Area

INFORMATION

The transmission/reception ranges shown below only apply under optimum operating conditions. For a secure signal transmission probe and receiver must be located in the transmission area of the other device. The range for a secure signal transmission is up to 18 m.

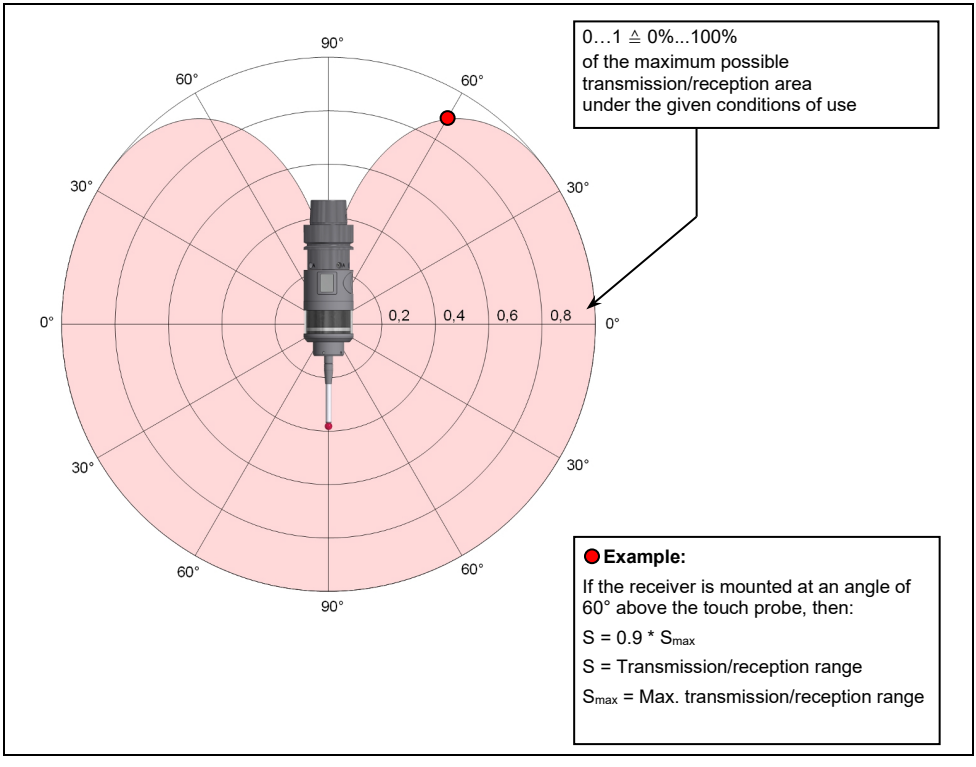

Fig. 5 Transmission and reception area (emission/reception behaviour of antenna)

1.9 Delivery Contents, Accessories and Spares

1.9.1 Delivery Contents

INFORMATION
A complete order number must contain at least the number of the touch probe and the description of the measuring unit (refer to chapter 1.5) (e.g. TP-R-400-PP).

Order Number	Description
TP-R-400-MM# **MM = Measuring unit**	**Radio-wave Touch Probe TP-R-400**

1.9.2 Styli

A variety of different styli, extensions and stylus adapters are available for m&h touch probes. It is possible to adapt the touch probe system to a wide range of use cases. A comprehensive overview of the possible stylus options can be found in the accessories catalogue.

1.9.3 Tool holders

A variety of different tool holders is available for m&h touch probes. It is possible to adapt the touch probe system to a wide range of use cases. An comprehensive overview of possible tool holders can be found in the accessories catalogue.

1.9.4 Accessories, General

Order Number	Description	Illustration
91.00-SWV-XX (on request)	Air jet with swivel screw fitting	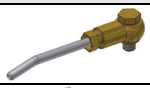
D20-VDI-90	Angle adapter for tool holder VDI	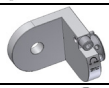
D20-MO-B	Modular adapter D20/D28 (Ø20/Ø28)	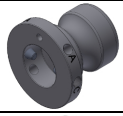
41.00-PP#	Measuring unit PP41.00	
41.10-HPP#	Precision measuring unit HPP41.10	
21.00-MY#	Measuring unit MY21.00	
41.00-KA	Cross adapter	
41.00-KA-V	Screw plug for cross adapter	
21.00-VE30	Extension (L=30 mm/1.18")	
21.00-VE50	Extension (L=50 mm/1.97")	
41.00-VE100	Extension (L=100 mm/3.94")	
41.00-VE200	Extension (L=200 mm/7.87")	

1.9.5 Spares

Order Number	Description	Illustration
4316	Battery (3.6 V, ½ AA)	
40.02-BATTERIE-DECKEL	Battery cover	
5764	Battery cover lock	
5186	20x1 Viton O-ring for battery cover	
1351	Clamping screw M5x0.5x7 (AF2.5 mm)	
1352	Adjustment screw M4x8 (AF2 mm)	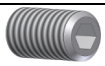
3240	Service cover	
3455	O-ring 16x1 for service cover	
2906	Metal eyelid	
2931	Conical spring	
5642	O-ring 25x2 for measuring unit holder	

2 Operation

2.1 Tools, Measurement and Test Equipment

Order Number	Description	Illustration
0227	Hexagon key AF1.3 mm	
1097	Hexagon key AF2 mm	
1346	Hexagon key AF2.5 mm	
1780	Hexagon key AF3 mm	
3489	Hexagon key AF4 mm	
5840	Assembly key for battery cover	
1665	Spanner AF4 mm	
0885	Mounting pin	
2951	C-spanner	
3079	Dial gauge	
TP-R-400-TB	Tool box, consisting of: 2x Battery (3.6 V / ½ AA) (4316) 1x Mounting pin (0885) 1x Spanner AF4 mm (1665) 2x C-Spanner (2951) 2x Hexagon key AF2 mm (1097) 2x Hexagon key AF2.5 mm (1346) 1x Hexagon key AF3 mm (1780) 2x Hexagon key AF4 mm (3489) 1x Hexagon key AF1.3 mm (0227) 1x Assembly key for battery cover (5840)	Not illustrated

2.2 Commissioning and Setup of the Touch Probe

2.2.1 Installing/Changing the Stylus

2.2.1.1 Installing/Changing the Stylus (Measuring Unit MY21.00)

NOTICE

Risk of damage to the equipment!

- Do not apply any turning force to the measuring unit!
- During replacement, always hold the stylus connection with the spanner AF4 mm!

1. Unscrew the stylus from the touch probe using the mounting pin.
1. Carefully screw the new stylus with mounting pin into the touch probe (Fig. 6).
2. Align the stylus to spindle center (refer to chapter 2.2.5).
3. Calibrate the touch probe.

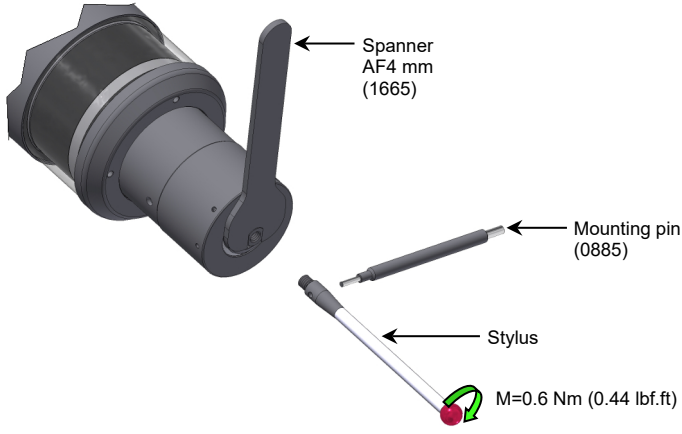

Fig. 6 Stylus change with measuring unit MY21.00

2.2.1.2 Installing/Changing the Stylus (Measuring Unit PP41.00/HPP41.10)

NOTICE

Risk of damage to the equipment!

The probe mechanic is sensitive, therefore never use excessive force when screwing in the stylus!

- The screwing torque is M=2 Nm!
- When using a break shaft adapter (91.00-S-M4/M4), only screw in the stylus with a maximal torque of 1 Nm (0.74 lbf.ft)!
- The use of a break shaft adapter (91.00-S-M4/M4) is not permitted in conjunction with precision measuring unit HPP41.10!

1. Unscrew the stylus from the touch probe using the mounting pin.
2. Carefully screw the new stylus with mounting pin into the touch probe (Fig. 7).
3. Align the stylus to spindle center (refer to chapter 2.2.5).
4. Calibrate the probe.

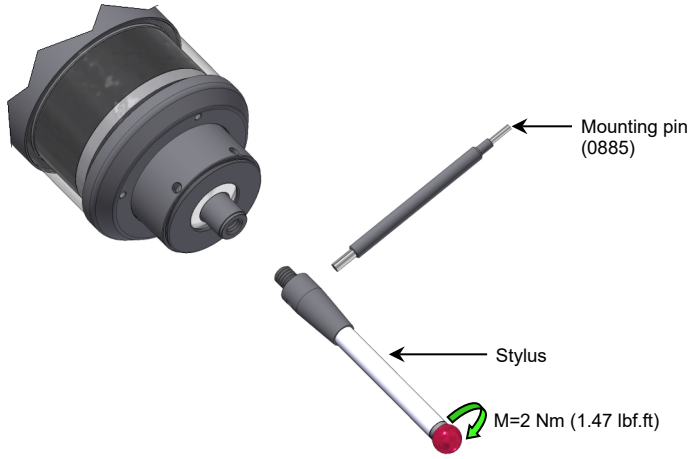

Fig. 7 Stylus change with measuring unit PP41.00/HPP41.10 (using PP41.00 as an example)

2.2.2 Mounting/dismounting the tool holder

2.2.2.1 Mounting tool holders Ø20

1. Dismounting the tool holder:
   1.1 Remove all "A" and "C" screws (refer to Fig. 8).
   1.2 Remove tool holder
2. Mounting the tool holder:
   2.1 Carefully slide the tool holder onto the probe body, adjusting thread "C" to the cone holes on the probe.
   2.2 Insert both clamping screws "C" and tighten lightly.
   2.3 Insert all adjustment screws "A" and tighten lightly.
3. Align the stylus to spindle center (refer to chapter 2.2.5).
4. Calibrate the probe.

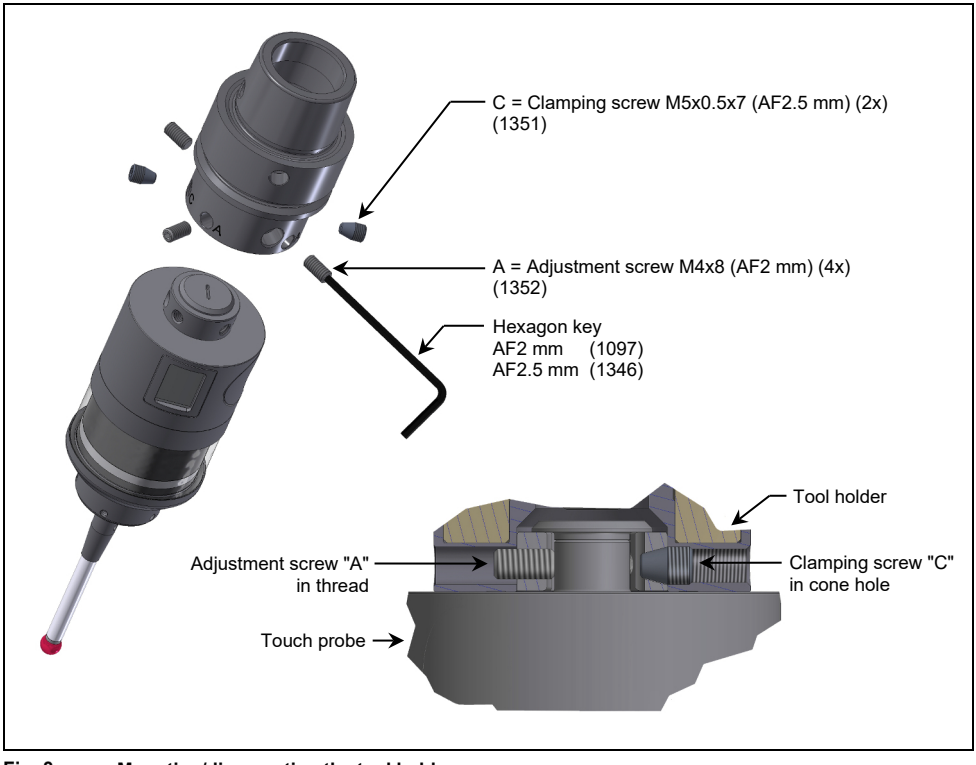

Fig. 8 Mounting/dismounting the tool holder

2.2.2.2 Mounting tool holders Ø28

1. Dismounting the tool holder:
   1.1 Remove clamping screws from the tool holder.
   1.2 Remove tool holder.
   1.3 Remove all "A" and "C" screws from the modular adapter (refer to Fig. 9).
   1.4 Remove modular adapter from touch probe.
2. Mounting the tool holder:
   2.1 Carefully slide the modular adapter onto the probe body. Align the „C“ threads with the conical bores.
   2.2 Insert both clamping screws „C“ and tighten lightly.
   2.3 Insert adjustment screws „A“ and tighten lightly.
   2.4 Slide the tool holder onto the modular adapter.
   2.5 Insert the clamping screws and tighten to the torque specified in Fig. 9.
3. Align the stylus to spindle center (refer to chapter 2.2.5).
4. Calibrate the touch probe.

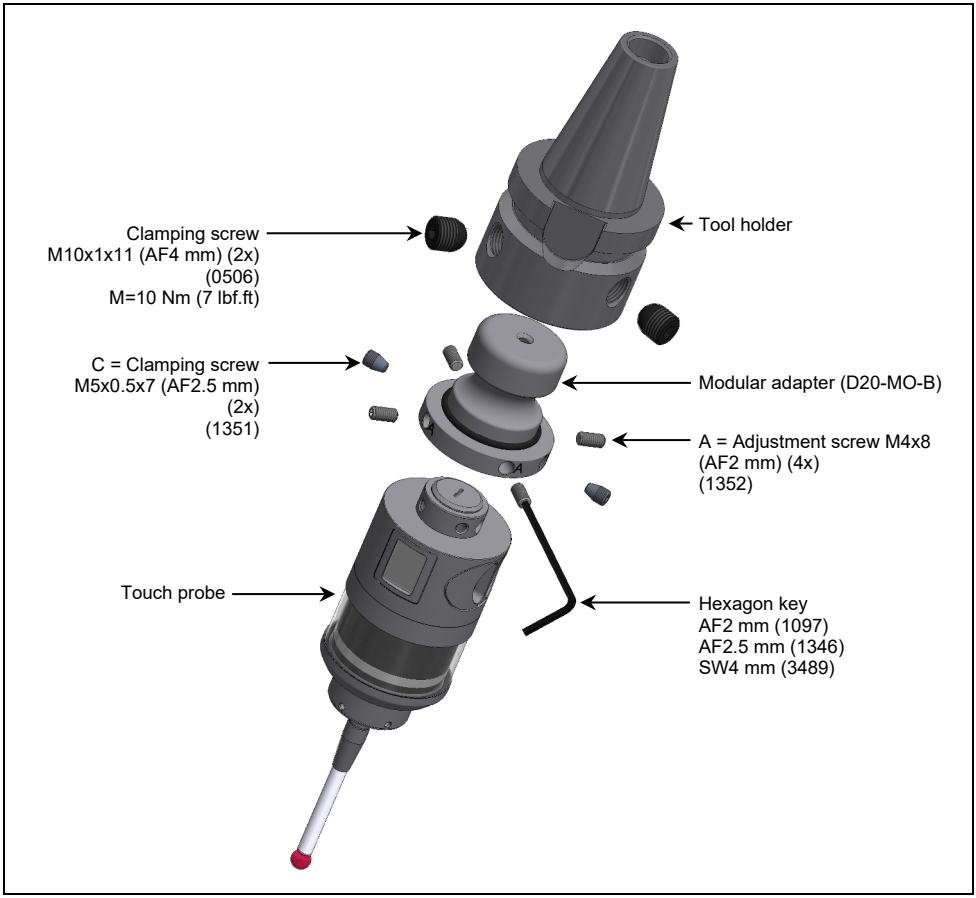

Fig. 9 Mounting/dismounting the tool holder

2.2.3 Inserting/Changing the Battery

NOTICE

Risk of damage to the equipment!

- Clean and dry the probe well before opening!
- Do not use compressed air to clean the touch probe!
- Replace empty batteries immediately!

1. Turn battery cover lock anti-clockwise and remove the battery cover to the outside of the housing of the touch probe.
2. Remove the used batteries.

NOTICE

Risk of damage to the equipment!

When closing the battery compartment, ensure the O-ring is properly seated and in faultless condition!

INFORMATION

The Touch Probe TP-R-400 is protected against wrong polarity. There is no need to pay attention to the polarity when inserting new batteries, but the batteries must always be inserted alternately into the battery compartment!

3. Insert new batteries **alternately** into the battery compartment (refer to Fig. 10) and insert the battery cover into the housing.
4. Turn the battery cover lock clockwise to lock the battery compartment.
   ► After insertion or replacement of the battery, the touch probe initialises for approx. 5 s. The LEDs illuminate in blue during this time.

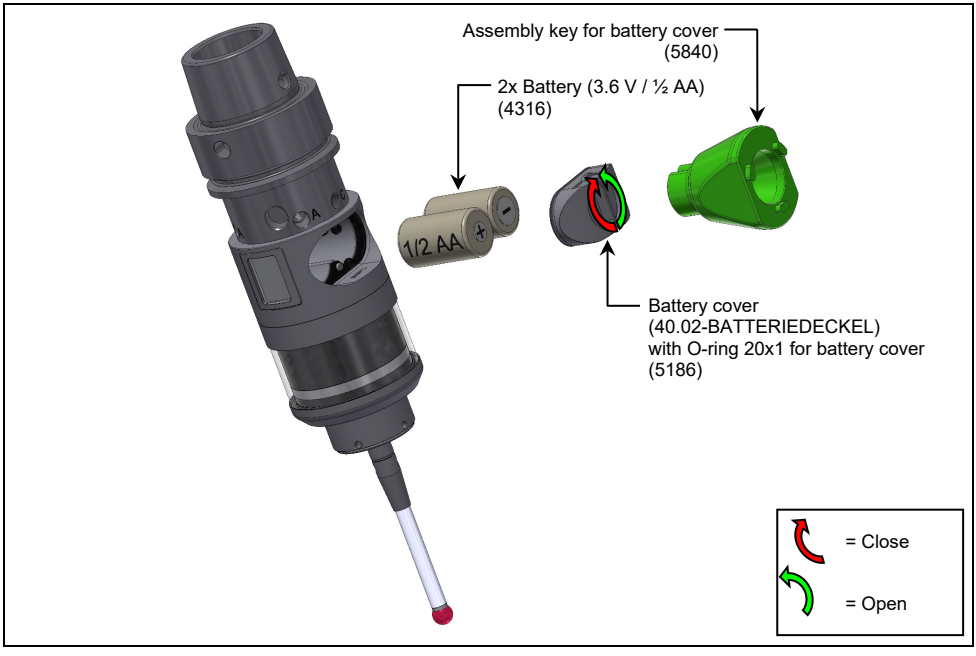

Fig. 10 Replacing batteries

2.2.4 Setting the Touch Probe and pairing with a Receiver

2.2.4.1 Menu Structure

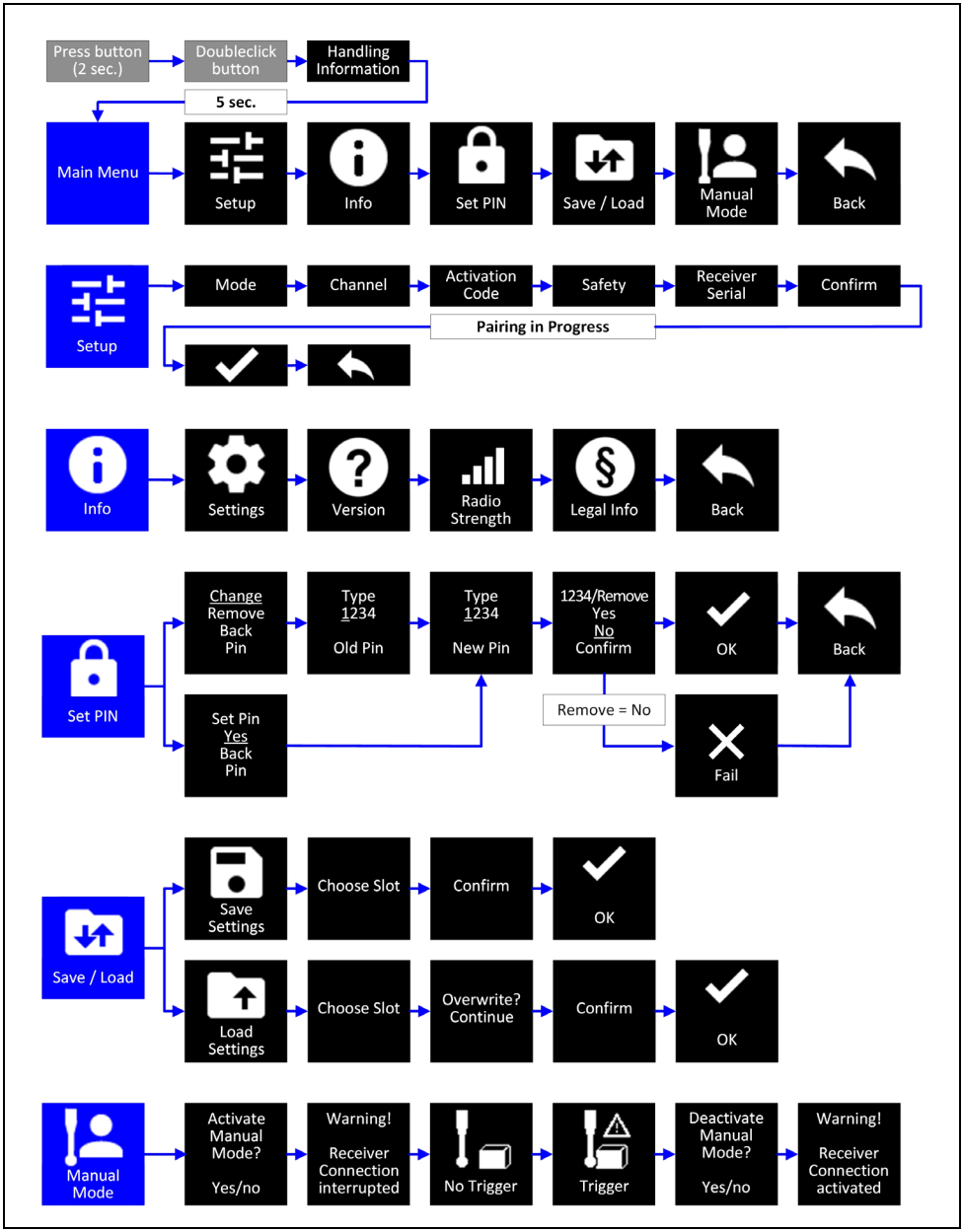

Fig. 11 **Menu Structure**

To access the touch probe menu, press the button on the back of the touch probe for approx. 2 s. Then press the button twice to confirm menu call-up. The display then shows some brief operating information and after approx. 5 s automatically opens the main menu, which consists of 5 setting levels (submenus). The following table lists these submenus with a brief description of each function.

Setting level/Submenu	Description
Setup	The **"Setup"** submenu contains all the necessary settings for setting up the touch probe and for pairing with a corresponding radio-wave receiver. The following settings can be made here individually: • **Mode:** Define whether the device is to be used as a touch probe or as a tool setter • **Channel:** Define the receiver channel to be used for transmission (only when using RWR95.51) • **Activation Code:** Define the activation codes for the touch probe • **Safety:** Define the interference safety level • **Receiver Serial:** Enter the serial number of the radio-wave receiver to be paired
Info	The **"Info"** submenu is used to display all information on the settings, power and firmware version of the touch probe. The following information can be called up here individually: • **Settings:** Display the settings defined in the **"Setup"** menu • **Version:** Display the firmware version of the touch probe • **Radio Strength:** Display the strength of the received radio-wave signal from the receiver • **Legal Info:** Display regional radio license information
Set PIN	The **"Set PIN"** submenu is used to set, change and delete a lock password (PIN). This function can be used to protect the touch probe settings against unwanted access.
Save/Load	The **"Save/Load"** submenu can be used to save the current touch probe settings and to load them at a later time. For this purpose, **3 internal memory slots** are available in the touch probe memory. Loading previously saved settings will overwrite the currently active settings.
Manual Mode	The **"Manual Mode"** submenu can be used to activate a manual touch probe mode in which the touch probe responds to stylus deflections by blinking orange with the integrated LED ring. In this mode, the connection to the receiver is disconnected and no status signals are transmitted to the control.

2.2.4.2 Operating the menu

To start the touch probe menu, it must be in"Sleep Mode" (e.g. Immediately after inserting the battery).
The menu is operated via only one button on the back of the touch probe (see also Fig. 12).
The following operating options are available:

- Press and hold the button (approx. 2 s): Start/Exit the menu/submenu (Back)
- Briefly tap the button: Scroll through a menu/submenu
- Tap the button twice: Select the menu item or open the submenu

2.2.4.3 Possible settings in the "Setup" menu

The following table shows the setting options for each parameter in the **"Setup"** menu.

Parameter	Possible Setting	Description
Mode	Probe	Using the system as a touch probe
	Toolset	Using the system as a tool setter
Channel*)	1	Receiver channel 1
	2	Receiver channel 2
Activation Code	A ⋮ H	Activation code of the touch probe
Safety	Fast	Low interference safety
	Normal	Average interference safety (Standard)
	Secu.2	High interference safety (Trigger Evaluation 2 ms)
	Secu.10	High interference safety (Trigger Evaluation 10 ms)
	Secu.20	High interference safety (Trigger Evaluation 20 ms)
Receiver Serial	XXXXX	Five-digit serial number of the receiver to be paired
*) Use of the receiver channel is only possible in conjunction with RWR95.51. For other receiver types, this setting must always be set to **"1"** .		

2.2.4.4 Setting Procedure

1. Press the button (Fig. 12) on the back of the touch probe for approx. 2 s to open the menu. Then immediately press the button twice to confirm.
   - ► The display (Fig. 12) shows brief operating information for the touch probe menu and then opens the main menu.

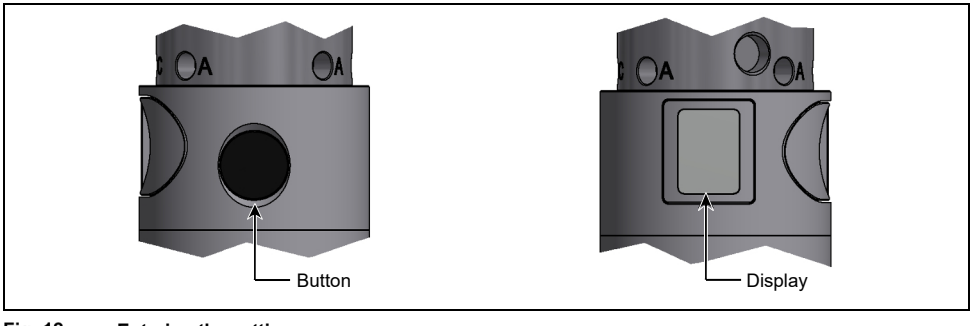

Fig. 12 Entering the settings

2. Scroll to the **"Setup"** menu item by briefly pressing the button several times and select it by pressing the button twice.

NOTICE

Risk of measuring deviations!

- The touch probe needs to be urgently recalibrated to avoid measuring deviations after the interference safety setting (parameter **"Safety"**) has been changed!

3. Set the parameters **"Mode"**, **"Channel"**, **"Activation Code"**, **"Safety"** and **"Receiver Serial"** one after the other.
   - ▶ All available parameters must be set. Scrolling between the parameters happens automatically. Briefly press the button on the touch probe to scroll through the different setting options for each parameter. When the desired setting is displayed, it can be selected/set by pressing the button twice.
4. After entering the serial number of the receiver to be paired (**"Receiver Serial"**), confirm the entry by pressing the **"Confirm"** setting twice.
   - ▶ The pairing process starts automatically via radio-wave. The recipient must be in "Standby" operation, i.e., the power supply to the receiver must be present, but no activation signal from the control and no "Ready" signal from a previously paired measuring system must be transmitted to the receiver. When pairing is successful, the symbol (✔) appears on the display. Tap the button briefly to confirm.

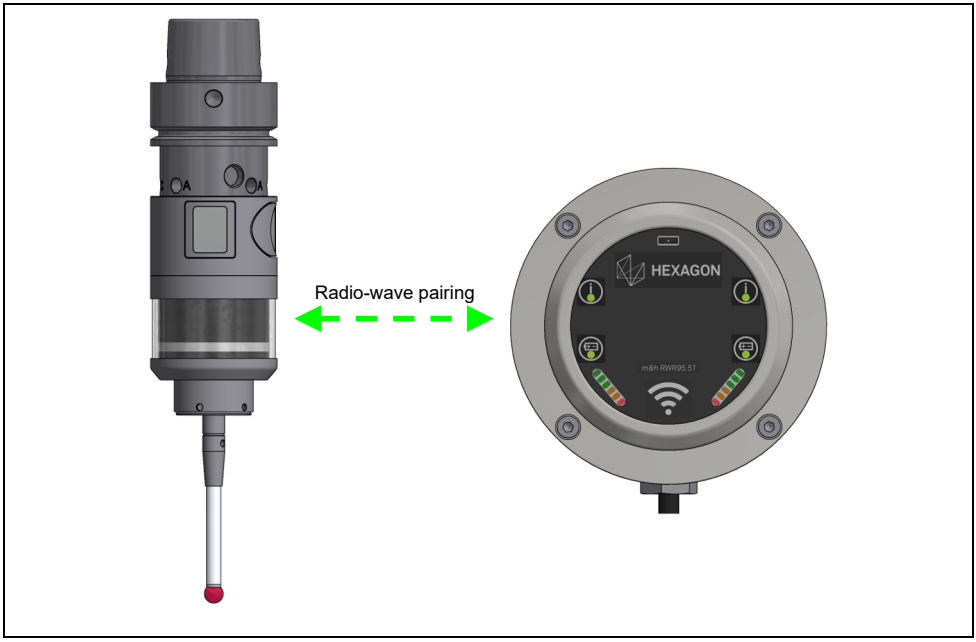

Fig. 13 Pairing

5. Press **"Back"** to exit the settings menu.
6. Press and hold the button to exit the touch probe menu.

2.2.5 Aligning Stylus to Spindle Centre

NOTICE

Risk of damage to the equipment!

- Clean and dry the probe well!
- Do not use compressed air to clean the touch probe!

1. Loosen clamping screws "C" (Fig. 14) (2x) then re-tighten with moderate force.
2. Adjust the touch probe with the adjustment screws "A" (Fig. 14) (4x) to less than 20 µm.
3. Tighten the clamping screws "C" (2x) a little more.
4. Adjust the touch probe with the adjustment screws "A" (4x) to less than 5 µm.
5. Tighten clamping screws "C" (Fig. 14) (2x) to the torque specified in Fig. 14.
6. Tighten adjustment screws "A" (Fig. 14) (4x) to the torque specified in Fig. 14 against each other.
7. Check the alignment of the stylus.
8. Calibrate the probe.

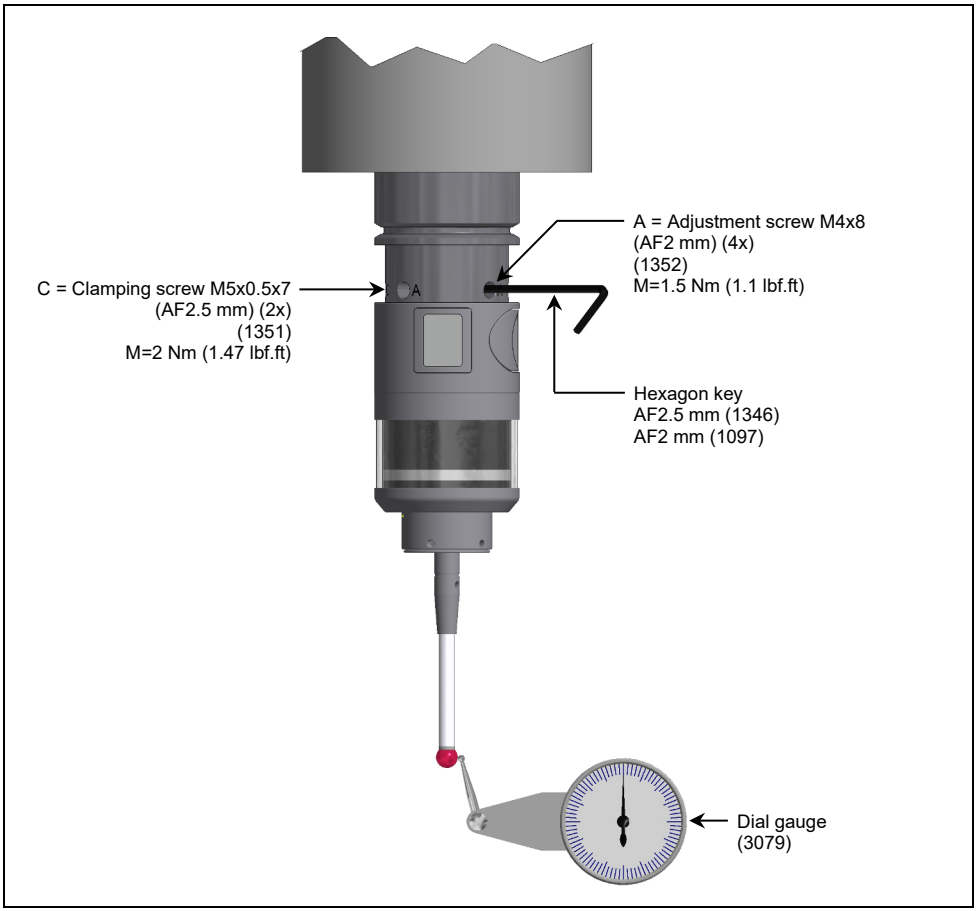

Fig. 14 Aligning Stylus to Spindle Centre

2.2.6 Adjusting the touch probe in the tool holder with a 90° adapter

1. Loosen adjustment screws "A" (4x) then re-tighten with light force.
2. Loosen clamping screws "C" (2x) then re-tighten with light force.
3. Use cap head screw AF4 to adjust the angular position of the touch probe (±5°).
4. Tighten the clamping screws "C" (2x).
5. Tighten the adjustment screws "A" (4x) against each other.
6. Calibrate the touch probe.

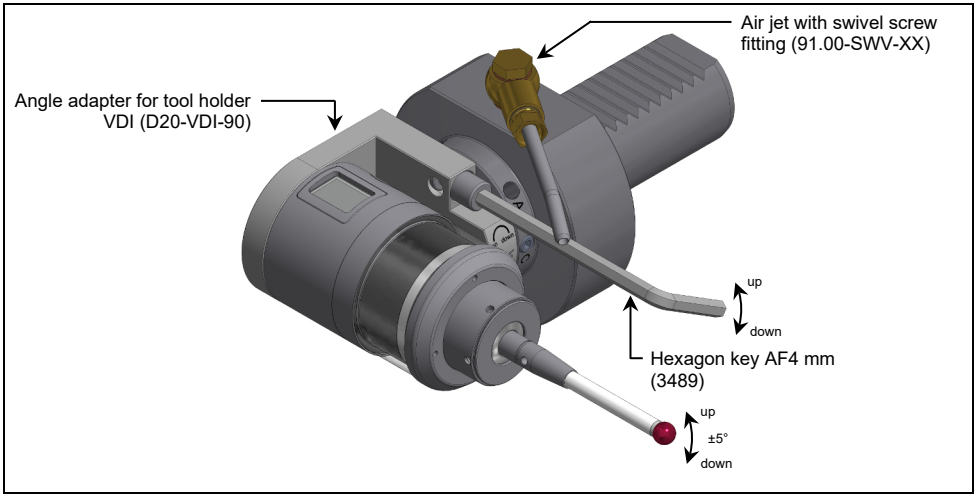

Fig. 15 Adjusting the touch probe in the tool holder with a 90° adapter

2.3 Optical Status Display

Subsequent table gives an overview of the blinking patterns of the LED ring (Fig. 16) and their meaning.

LED ring blinking green	Touch probe is transmitting signals
LED ring blinking green/red	LOW BATTERY
LED ring blinking orange	Stylus deflected
LED ring permanently red	Error
LED ring permanently blue (for 5 s after battery is inserted)	Touch probe starts (MY21.00/ PP41.00)
LED ring permanently green (for 5 s after battery is inserted)	Touch probe starts (HPP41.10)

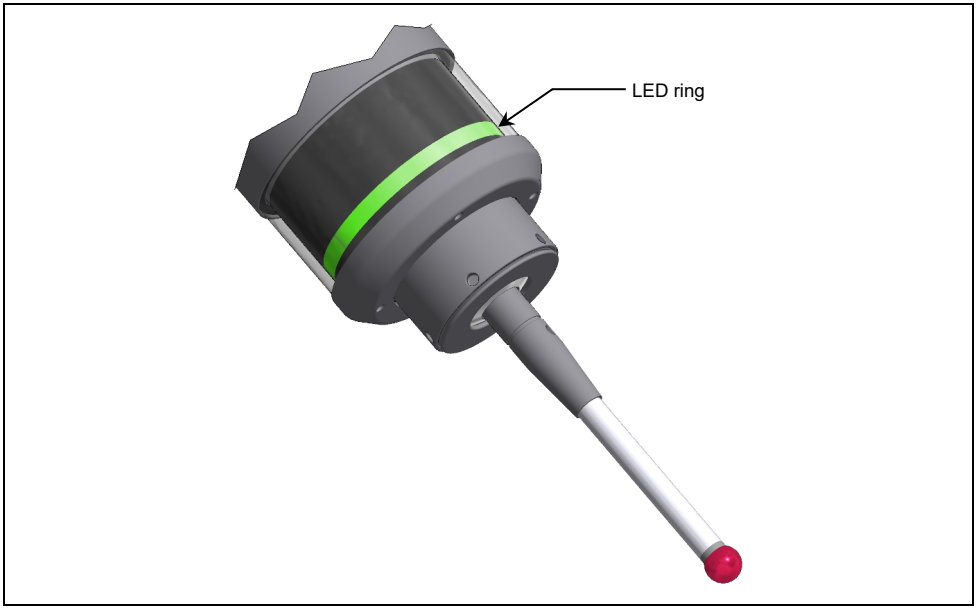

Fig. 16 Optical status display