3P607378-1A_1校_20200508

DAIKIN

Wired Remote Controller

Installation Handbook

English

Français

Español

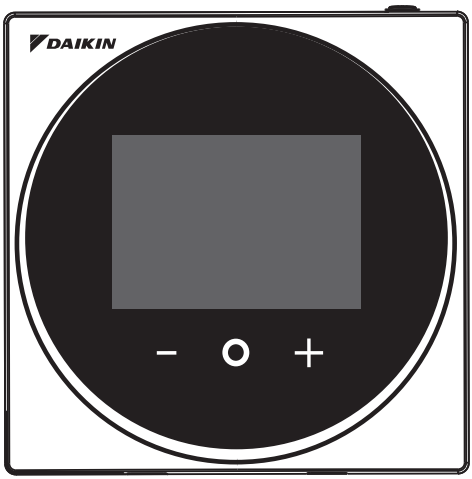

MODEL BRC1H71W

- Be sure to read before conducting the installation of this product, and conduct installation according to this manual.
- Refer to this manual together with the installation manual of the indoor unit.
- It is possible to perform settings of some functions from a smart phone app.
- For details, refer to the BRC1H71W manual on our company website.

- Assurez-vous de lire avant de procéder à l'installation de ce produit et procédez à l'installation conformément à ce manuel.
- Reportez-vous à ce manuel ainsi qu'au manuel d'installation de l'unité intérieure.
- Il est possible d'effectuer les réglages de certaines fonctions à partir d'une application pour smartphone.
- Pour plus de détails, reportez-vous au manuel BRC1H71W sur le site Web de notre société.

- Asegúrese de leerlo antes de instalar el producto y realice su instalación de acuerdo con este manual de instalación.
- Consulte este manual junto con el manual de instalación de la unidad interior.
- Algunas funciones se pueden configurar desde una aplicación de teléfono inteligente.
- Para más detalles, consulte el manual BRC1H71W en el sitio web de nuestra empresa.

3P607378-1A_1校_20200508

Contents

Safety Considerations 2

Accessories 3

Button Locations and Descriptions 4

Remote controller installation procedure 6

Field Setting 17

Certification 20

License 21

Safety Considerations

The original instructions are written in English. All other languages are translations of the original instructions.
All phases of the field-installation, including, but not limited to, electrical, piping, safety, etc. must be in accordance with manufacturer's instructions and must comply with national, state, provincial and local codes.
Read these **SAFETY CONSIDERATIONS** carefully before installing the remote controller.
After completing the installation, ensure that the remote controller operates properly during startup operation.
Train the customer to operate and maintain the remote controller. Inform customers that they should store this Installation Manual with the Operation Manual for future reference.
Always use a licensed installer or contractor to install this product. Improper installation can result in electrical shock, fire, or explosion.
Meanings of **WARNING**, **CAUTION**, and **NOTE** Symbols.

⚠ **WARNING**	Indicates a potentially hazardous situation which, if not avoided, could result in death or serious injury.
⚠ **CAUTION**	Indicates a potentially hazardous situation which, if not avoided, may result in minor or moderate injury. It may also be used to alert against unsafe practices.
⚠ **NOTE**	Indicates situations that may result in equipment or property-damage accidents only.

⚠ **WARNING**
Only qualified personnel must carry out the installation work.
Consult your Daikin dealer regarding relocation and reinstallation of the remote controller. Improper installation work may result in electric shocks or fire.
Electrical work must be performed in accordance with relevant local and national regulations and with instructions in this installation manual. Improper installation may cause electrical shocks or fire.
Use only specified accessories and parts for installation work. Failure to use specified parts may result in electric shocks, fire, or the unit falling.
Do not disassemble, reconstruct, or repair. Electric shock or fire may occur.
Make sure that all wiring is secured, that specified wires are used, and that no external forces act on the terminal connections or wires. Improper connections or installation may result in fire.
Before touching electrical parts, confirm the power is off to the unit.

⚠ **CAUTION**
Keep water out of the remote controller. To avoid electric shock due to entry of water or insects, fill the wiring through-hole with putty. Do not wash the remote controller with water as it may result in electrical shocks or fire.
Do not touch the remote controller buttons with wet fingers. Touching the buttons with wet fingers can cause an electric shock.

⚠ CAUTION

Do not install the remote controller in the following locations:

(a) Where a mineral oil mist or oil spray or vapor is produced, for example, in a kitchen.
Plastic parts may deteriorate.

(b) Where corrosive gas, such as sulfurous acid gas, is produced.

(c) Near machinery emitting electromagnetic waves.
Electromagnetic waves may disturb the operation of the control system and cause the unit to malfunction.

(d) Where flammable gas may leak, where there is carbon fiber or ignitable dust suspension in the air, or where volatile flammables such as thinner or gasoline are handled.
Operating the unit in such conditions can cause a fire.

(e) High temperature areas or areas with direct flames.
Overheating and/or fire can occur.

(f) Moist areas where there is exposure to water. If water enters the inside of the remote controller, it may cause electric shock and electrical components may fail.

⚠ NOTE

Install the control wires for the indoor unit and the remote controller at least 3.5 feet (1 meter) away from televisions or radios to prevent image interference or noise. Depending on the radio waves, a distance of 3.5 feet (1 meter) may not be sufficient to eliminate the noise.

When the remote controller's temperature sensor is used, select the installation location as per the following:

- A place where average temperature in the room can be detected.
- A place where it is not exposed to direct sunlight.
- A place where it is far away from any heat source.
- A place where it is not affected directly by outside air.

Accessories

The following accessories are included.

Drywall screw	Drywall anchor	Operation Handbook	Installation Handbook
(3 pcs.)	(3 pcs.)	(3 pcs.)	(1 pc.)

Mounting plate (Metal)	Mounting plate (Plastic)	Screw for mounting plate (M3×10)	Screw for mounting plate (M4×40)
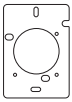 (1 pc.)	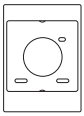 (1 pc.)	(3 pcs.)	(2 pcs.)

Button Locations and Descriptions

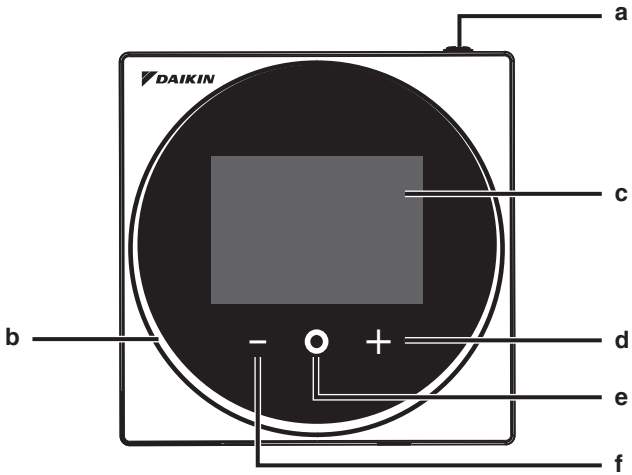

Functions items (i.e., Operation Mode, Fan Speed, and Setpoint) are set from the menu screen.

NOTICE

- Do not install the remote controller in places exposed to direct sunlight. The LCD may be damaged.
- Do not pull or twist the remote controller cord. The remote controller may be damaged.
- Do not use objects with sharp ends to press the buttons on the remote controller. Damage may result.

a ON/OFF button
- Press this button to turn on the system.
- Press this button again to turn off the system.

b Status indicator (LED)
- During operation, the light ring around the display lights up blue/red/green.
  Lights up blue: Operating, Blinks red: Error is occurring, Lights up/blinks green: Bluetooth connecting

c LCD (Refer to INFORMATION on page 5.)
- Displays the current setpoint and air conditioner operation status.

d NAVIGATE/ADJUST button
- Navigate right.
- Adjust a setting.

e SELECT/ACTIVATE /SET button
- From the home screen, enter the main menu.
- From the main menu, enter one of the submenus.
- From their respective submenu, activate an operation/ventilation mode.

f NAVIGATE/ADJUST button
- Navigate left.
- Adjust the setting.

Home screen

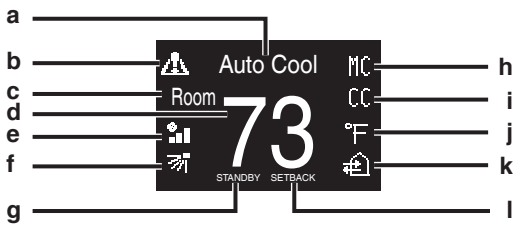

Information screen

User menu/Administrator menu/Installer menu

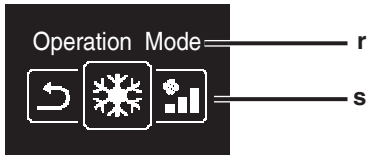

User menu

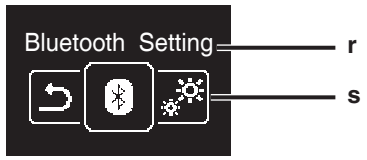

Administrator menu/Installer menu

The Bluetooth® word mark and logos are registered trademarks owned by the Bluetooth SIG, Inc. and use of such marks by Daikin industries, LTD. is under license. Other trademarks and trade names are those of their respective owners.

Screen display explanation

a Operation mode/OFF display
- Displays the operation status.

b Error/Filter/Test icon
- Error, filter and test icons are displayed.

c Room/Set
- Indicates whether it's a room temperature display (Room) or setpoint display (Set).

d Room temperature/Set temperature
- Displays the current room or setpoint temperature.

e Fan speed
- Displays the set fan speed.

f Airflow direction
- Displays the set airflow direction.

g STANDBY
- Displays during defrost/hot start.

h Changeover controlled by the master indoor unit
- Displayed when another indoor unit on the system has the authority to change the operation mode between cool and heat.

i Under centralized control
- Displayed if the system is under the management of a multi-zone controller (Optional) and the operation of the system through the remote controller is limited.

j Fahrenheit/Celsius
- Depending on the setting, Fahrenheit/Celsius display can be selected.

k Ventilation operation/Air Purify
- Displayed when a Heat Reclaim Ventilator is connected.

l Setback
- Blinks during setback operation.
- Displayed during setback setting.

m Information icon

n Clock (24 hours time display)

o MAIN/SUB remote controller sign

p Status
- Notifies the status.

q Error display
- If an error occurs, the icon, an error code and unit number are displayed.

r Settings menu name

s Settings menu icon

INFORMATION

Depending on the connected model, some items may not be displayed.
The controller is equipped with a power-saving function that darkens the display if there is no operation for a certain period of time. To make the screen light up again, press one of the buttons.
Note that pressing one of the buttons will only make the display bright again, not cause remote controller operation.

Remote controller installation procedure

Deciding where to install the remote controller

Select the installation location based on “Safety Considerations” (see page 2) and obtain consent of the customer.

Creating a wiring through-hole in the wall (when opening a hole in the wall and installing)

[Unit : inch (mm)]

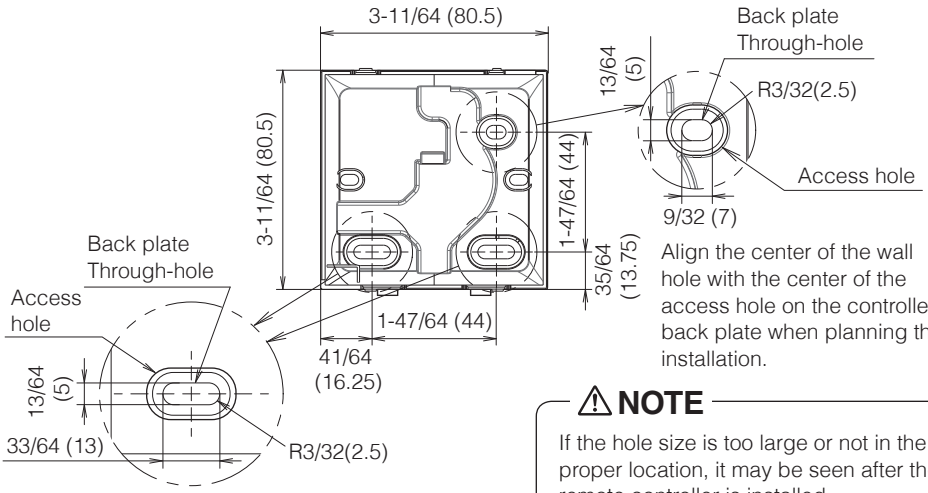

Align the center of the wall hole with the center of the access hole on the controller back plate when planning the installation.

⚠ NOTE

If the hole size is too large or not in the proper location, it may be seen after the remote controller is installed.

⚠ CAUTION

- Note that if the wiring through-hole is large or deviates from the specified position, the hole may be exposed.

Determining the wire routing direction for the back plate

Before mounting the controller, determine the wiring direction and remove a piece of the controller's back plate accordingly (i.e.: a, b, c). The wiring can be routed from the top, the left, or the bottom of the back cover. Remove a piece of the back plate according to the following figure.
After removing a thin piece with a tool such as clippers, remove burrs using a file, etc.

a Wiring from top
b Wiring from left
c Wiring from bottom

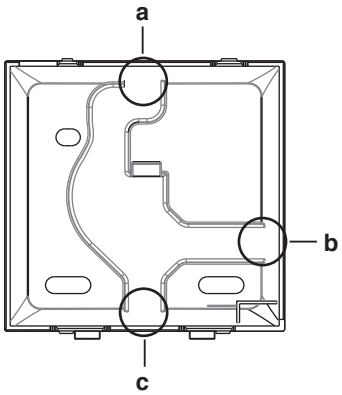

⚠ CAUTION

In case you are routing the wiring from the rear, you don't have to remove anything.
When routing the wiring from the top, rear, left, or bottom, or when installing on a mounting plate etc., be sure to route the wiring to the upper casing before securing the back plate.

Securing the back plate

Wall installation

1 : Take the drywall screws and drywall anchors out of the accessory bag.

2 : Mount the back plate to a flat surface.

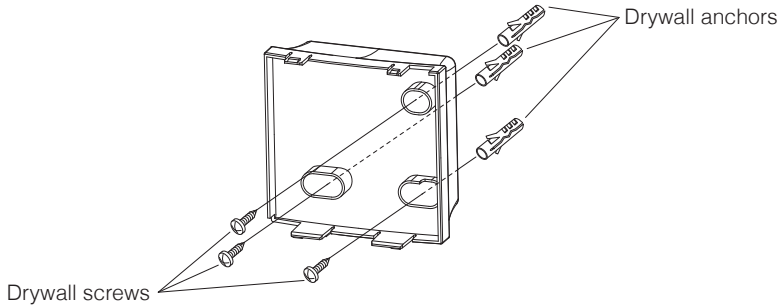

In case of installing in the electrical component box

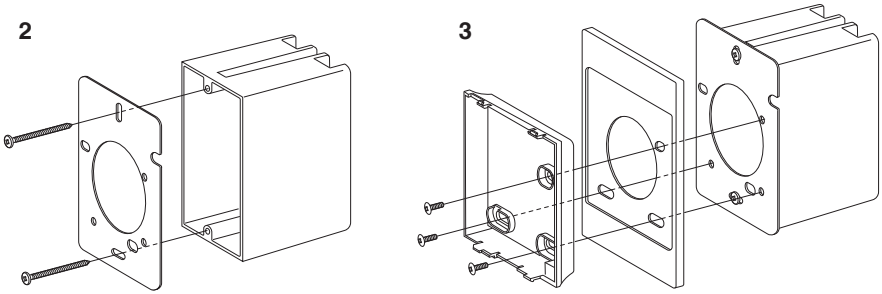

1 : Take the screws for the mounting plate (M3×10 and M4×40), and the mounting plates (metal and plastic) out of the accessory bag.

2 : Attach the mounting plate (metal) to the electrical component box with the screws for the mounting plate (M4×40).

3 : Attach the back plate and mounting plate (plastic) with the screws for mounting plate (M3×10).

⚠ CAUTION

- For the installation surface, select as flat a location as possible.
- Choose a place where there is no gap between the wall and the screw fixing part of the back plate.
- If there is an empty space between the back plate and the screw fixing part (nut part) due to the structure of the wall, install with a torque of 20 N · cm or less.
  If it is tightened too much, the back plate will be deformed and the upper casing will come off easily.
- If the upper casing comes off easily, loosen the drywall screws to lessen the deformation.
- If tightened too much, the back plate will be deformed and the upper casing will come off easily.
  If the upper casing comes off easily, loosen the screws and correct the deformation.

Connecting the electrical wiring

All wiring must comply with the following requirements:

Wire specification	Value
Wiring type	Non-shielded, 2-conductor, Stranded copper wire
Wiring size	AWG-18
Wiring length	Maximum 1640 feet (500 m)

Prepare the wiring for connection to the remote controller following these instructions:

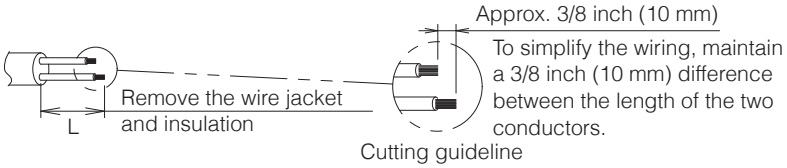

Wiring outlet	L
Top	±5.5 inch (140 mm)
Left	±4.3 inch (110 mm)
Bottom	±3.5 inch (90 mm)
Rear	No requirements

Connect the terminals (P1, P2) of the remote controller to the terminals (P1, P2) of the indoor unit. (P1 and P2 are not polarity sensitive.)

⚠ CAUTION

- Before working, shut off all power supplies.
- A mounting plate for installing the remote controller and remote controller wiring are not included.
- Do not touch the remote controller circuit board directly with your hands.

Top outlet

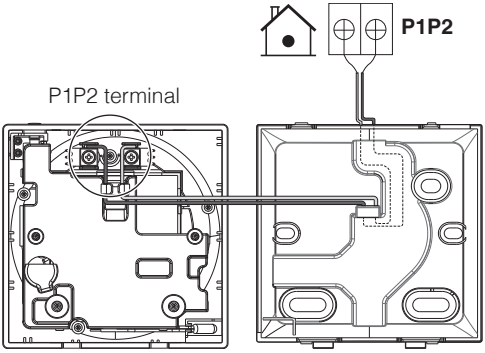

Rear outlet

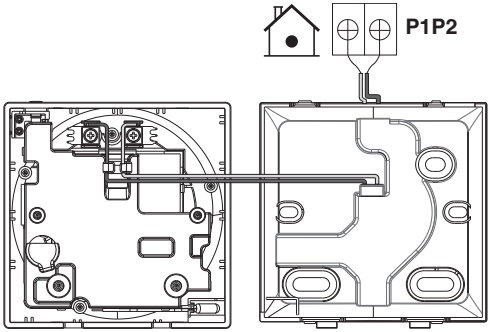

Left outlet

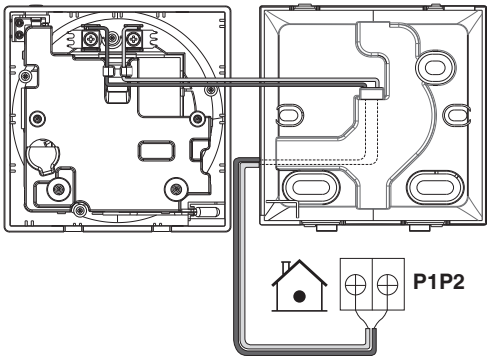

Bottom outlet

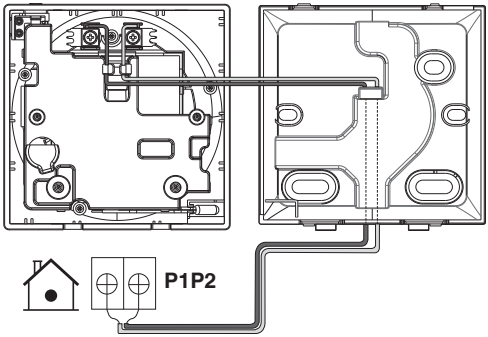

⚠ CAUTION

- Keep the wiring away from the power wire so that electrical noise (external noise) is not received.
- In order to prevent the entry of water or insects, use putty (field supply) to securely seal the wiring lead-in hole.

Closing the controller

1 : Place the top of the controller on the top of the back plate.
2 : Snap the bottom of the controller into place on the bottom of the back plate.
3 : Ensure the installation site is dust-free, before peeling the protective seal.

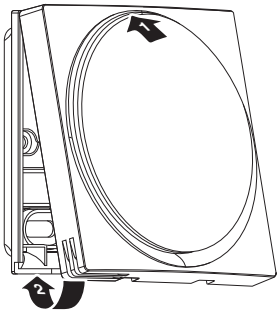

⚠ CAUTION

- Never touch the internal parts of the controller.
- When closing the controller, be careful not to pinch the wiring.
- To prevent damage, make sure the front of the controller is clicked into the back plate securely.

When removing the upper casing

Insert a flat head screwdriver into the recess in the back plate and remove the upper casing.
(2 locations)

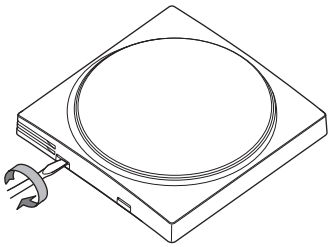

⚠ CAUTION

- The remote controller circuit board is attached to the upper casing. Be careful not to damage the circuit board and casing when removing the upper casing.
- Do not touch the remote controller circuit board directly with your hands.
- Be careful not to allow dust or moisture to adhere to the circuit board when the upper casing is removed.

Designating a controller as main or sub

Prerequisite: A remote controller is already connected to the indoor unit.

Connect a second controller.
After turning on the power, perform setting of the second controller.

Result: It will start up automatically.

▼

Home screen

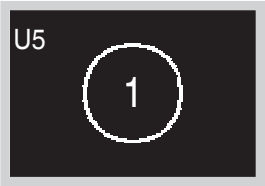

Wait for a U5, U8 error code to appear on the screen.
Screen display explanation
1 main
2 sub

▼

Home screen

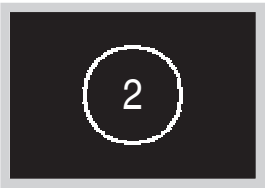

When the U5 error code appears, press ▬ and hold until "2" appears on the screen.
When the U8 error code appears, press ▬ and hold until "1" appears on the screen.

Result:
A controller displaying 1 is set as main, and a controller displaying 2 is set as sub.

INFORMATION

If sub remote controller is not set at power-on in the case of one indoor unit controlled by two remote controllers, Error Code: U5 is displayed in the connection checking screen.
If the sub remote controller does not display the home screen two minutes after its designation, turn off the power and check the wiring.

Releasing the changeover master

To change the authority to choose cooling/heating, you must first specify the remote controller with the authority, then release the authority.
Depending on the system, setting may not be available.

Prerequisite: You are in the installer menu.
You are operating the controller of the indoor unit that you want to release from being the changeover master.

Home screen

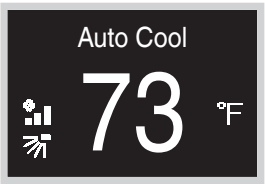

Press and hold ○ button for 5 seconds or longer.
The information screen is displayed.

Information screen

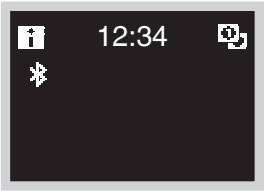

Press ○ → + → − (in that order) and hold them down for 10 seconds.
The installer menu screen is displayed.

Installer menu screen

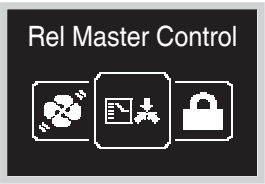

Navigate to the Rel Master Control menu.

Sub-menu screen

Press + to release the indoor unit from its authority.

Result:
- The indoor unit is released from its authority.
- The controllers of all indoor units display a blinking "MC" icon.

Setting up the changeover master

This setting is available only when none of the remote control in the system has master control.

Prerequisite: No indoor unit is yet set as the changeover master ("MC" icon blinking on all controllers).
You are operating the controller of the indoor unit that you want to set as the changeover master.

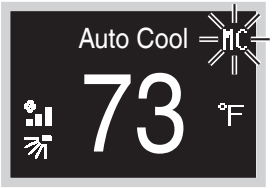

Menu screen

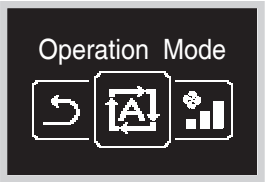

Navigate to the operation mode menu.

Sub-menu screen

Press − or +.

Result:
- The indoor unit is now the changeover master ("MC" icon not displayed).
- All sub controllers display the "MC" icon.

Field Setting

Field settings method

This section describes how to perform field setting.

Home screen

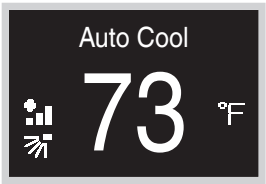

Press and hold button for 5 seconds or longer to display the information screen.

Information screen

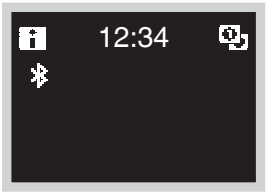

Press → → (in that order) and hold them down for 10 seconds to display the installer menu screen.

Installer menu screen

Press or button, for move to “”.
If Bluetooth is connected, performing field setting from the remote controller side is impossible.
Disconnect Bluetooth, or perform field setting from the mobile application.

Sub-menu screen

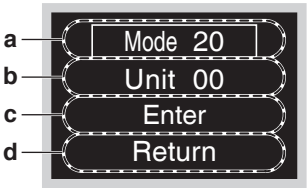

Press or button, to select Mode No. and press to enter the field setting menu.
Press or button, to scroll the desired Mode No. and press button.

a Mode No.
b Unit No.
c Enter
d Return

Sub-menu screen

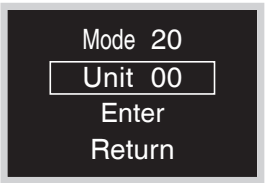

Press − or + button, to select Unit No. and press ○ button.
Press − or + button, scroll to the desired Unit No. and then press ○ button to set the selection.

Sub-menu screen

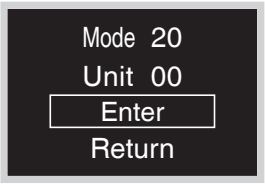

Press − or + button, to select Enter, and then press ○ button to set the selection.

Sub-menu screen

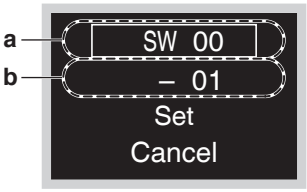

Press − or + button, select First Code No., and then press ○ button.
Press + or − button, scroll to the desired First code No. and then press ○ button to set the selection.

a First Code No.
b Second Code No.

Sub-menu screen

Press − or + button, to move Second Code No., and then press ○ button.
Press − or + button, to scroll to the desired Second Code No., and then press ○ button.

Sub-menu screen

Press − or + button, select Set, and then press ○ button to fix the setting and return to the previous screen.
If the setting is not changed, select Cancel.

Sub-menu screen

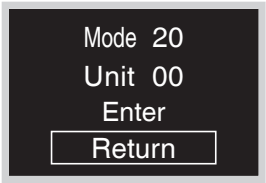

Press − or + button, move to Return, and then press ○ button to return to the installer menu.
* If the setting has been changed, the screen may return to the home screen without returning to the installer menu.

⚠ CAUTION

- The connection of optional accessories to the indoor unit might cause changes to some field settings. For more information, see the installation manual of the optional accessory.
- For details about the specific field settings of each type of indoor unit, see the installation manual of the indoor unit.
- Field settings that are not available for a connected indoor unit are not displayed.
- Field setting default values are different depending on the indoor unit model. For more information, see the service manual of the indoor units.

Certification

COMPLIANCE WITH FCC RULES AND REGULATIONS

15.21

You are cautioned that changes or modifications not expressly approved by the part responsible for compliance could void the user's authority to operate the equipment.

15.105(b)

This equipment has been tested and found to comply with the limits for a Class B digital device, pursuant to part 15 of the FCC Rules. These limits are designed to provide reasonable protection against harmful interference in a residential installation. This equipment generates, uses and can radiate radio frequency energy and if not used in accordance with the instructions, may cause harmful interference to radio communications.

However, there is no guarantee that interference will not occur in a particular installation. If this equipment does cause harmful interference to radio or television reception, the user is encouraged to try to correct the interference by one or more of the following measures:

- Reorient or relocate the receiving antenna.
- Increase or decrease the separation between the equipment and receiver.
- Connect the equipment into an outlet on a circuit different from that to which the receiver is connected.
- Consult the dealer or an experienced remote control/ TV technician for help.

This equipment has been verified to comply with the limits for a Class B computing device, pursuant to FCC Rules. The user is cautioned that changes and modifications made to the equipment without the approval of manufacturer could void the user's authority to operate this equipment.

FCC RF Radiation Exposure Statement:

To comply with the FCC RF exposure compliance requirements, this device and its antenna must not be co-located or operating in conjunction with any other antenna or transmitter.

FCC Authorization Label

This device complies with part 15 of the FCC Rules. Operation is subject to the following two conditions:

1. This device may not cause harmful interference.
2. This device must accept any interference received, including interference that may cause undesired operation.

Under Industry Canada regulations, this radio transmitter may only operate using an antenna of a type and maximum (or lesser) gain approved for the transmitter by Industry Canada.

To reduce potential radio interference to other users, the antenna type and its gain should be so chosen that the equivalent isotropically radiated power (e.i.r.p.) is not more than that necessary for successful communication.

This device complies with Industry Canada licence-exempt RSS standard(s). Operation is subject to the following two conditions: (1) this device may not cause interference, and (2) this device must accept any interference, including interference that may cause undesired operation of the device.

This Class B digital apparatus complies with Canadian ICES-003.

RF exposure:

To comply with the RF exposure compliance requirements, this device and its antenna must not be co-located or operating in conjunction with any other antenna or transmitter.

License

The following OSS is included in the remote controller.
[micro-ecc]

Copyright (c) 2014, Kenneth MacKay
All rights reserved.

Redistribution and use in source and binary forms, with or without modification, are permitted provided that the following conditions are met:
* Redistributions of source code must retain the above copyright notice, this list of conditions and the following disclaimer.
* Redistributions in binary form must reproduce the above copyright notice, this list of conditions and the following disclaimer in the documentation and/or other materials provided with the distribution.

THIS SOFTWARE IS PROVIDED BY THE COPYRIGHT HOLDERS AND CONTRIBUTORS "AS IS" AND ANY EXPRESS OR IMPLIED WARRANTIES, INCLUDING, BUT NOT LIMITED TO, THE IMPLIED WARRANTIES OF MERCHANTABILITY AND FITNESS FOR A PARTICULAR PURPOSE ARE DISCLAIMED. IN NO EVENT SHALL THE COPYRIGHT HOLDER OR CONTRIBUTORS BE LIABLE FOR ANY DIRECT, INDIRECT, INCIDENTAL, SPECIAL, EXEMPLARY, OR CONSEQUENTIAL DAMAGES (INCLUDING, BUT NOT LIMITED TO, PROCUREMENT OF SUBSTITUTE GOODS OR SERVICES; LOSS OF USE, DATA, OR PROFITS; OR BUSINESS INTERRUPTION) HOWEVER CAUSED AND ON ANY THEORY OF LIABILITY, WHETHER IN CONTRACT, STRICT LIABILITY, OR TORT (INCLUDING NEGLIGENCE OR OTHERWISE) ARISING IN ANY WAY OUT OF THE USE OF THIS SOFTWARE, EVEN IF ADVISED OF THE POSSIBILITY OF SUCH DAMAGE.

Our continuing commitment to quality products may mean a change in specifications without notice.

© 2020 **DAIKIN NORTH AMERICA LLC** · Houston, Texas · USA · www.daikincomfort.com

DAIKIN INDUSTRIES, LTD.

Head office:
Umeda Center Bldg., 2-4-12, Nakazaki-Nishi,
Kita-ku, Osaka, 530-8323 Japan

Tokyo office:
JR Shinagawa East Bldg., 2-18-1, Konan,
Minato-ku, Tokyo, 108-0075 Japan

3P607378-1A EM19A029A [2005] HT