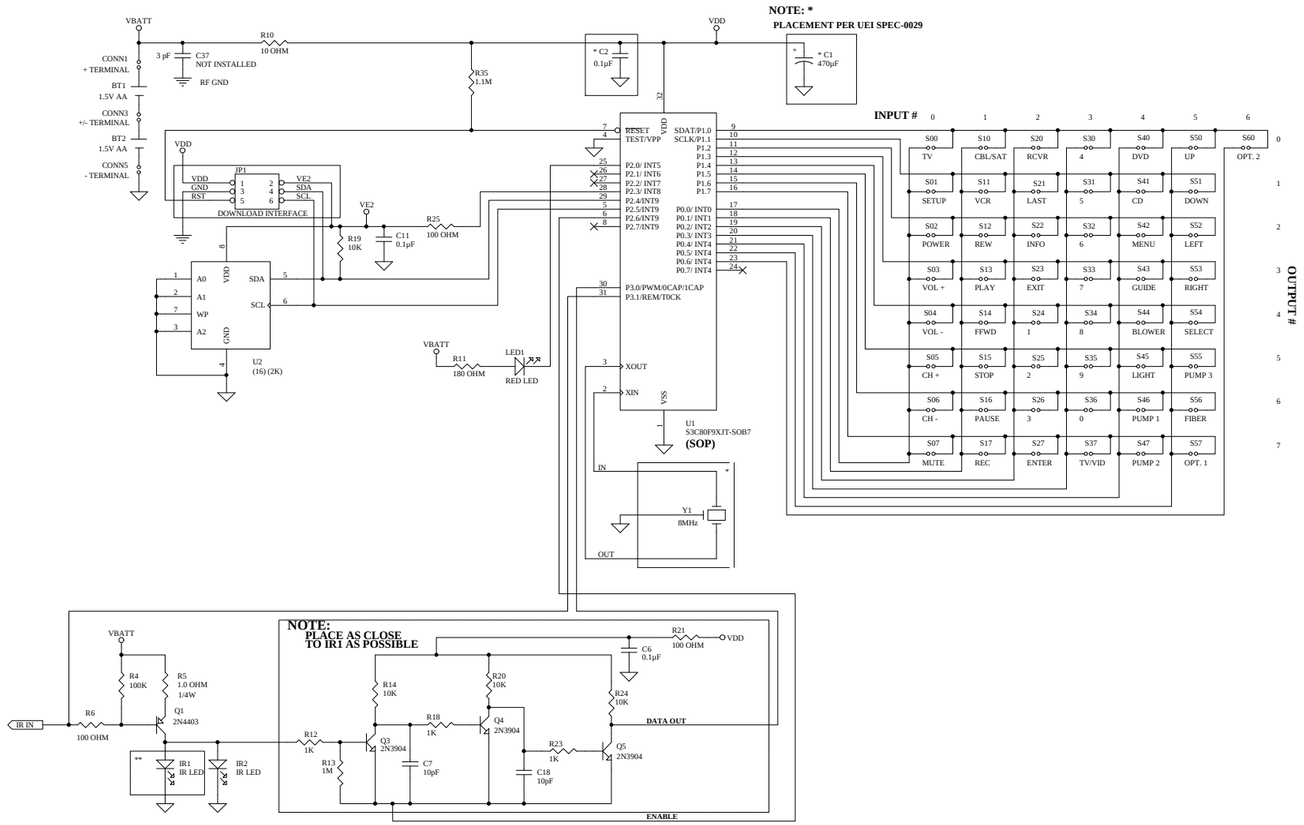

Layout Notes: **

Align IR1 with mark on plastics.

Layout Notes: àà

1.) Place Learner circuit as close to IR1 as possible.
2.) Place DATA OUT TRACE well away from the RED LED TRACE and the VBATT TRACE.

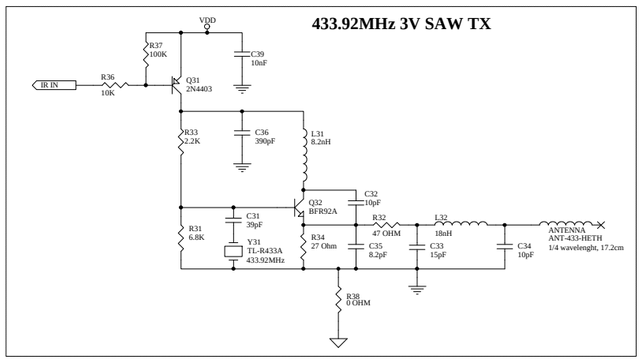

NOTE

RF GND

Vbatt - (Negative battery terminal)

CONFIDENTIAL: **This document contains information which is confidential and proprietary to Universal Electronics Inc.**

Universal Electronics Inc. UNIVERSAL ELECTRONICS Making Life of Control Simple Technology	Title *Balboa Instruments 6 Device Spa Remote URC-1033BJ0*		
6101 Gateway Drive Cypress, CA 90630 Phone 714-820-1000 FAX 714-820-1010	Size: C	Number: UEIS-10253	Revision: 1
	Design by:	Drawn By: T. Murry	
	File: C:\My Documents\Releases Packages\Balboa Instruments 6 Device Spa Remote\10253	Date: 19-Nov-2002 Time: 15:49:54	Sheet 1 of 1