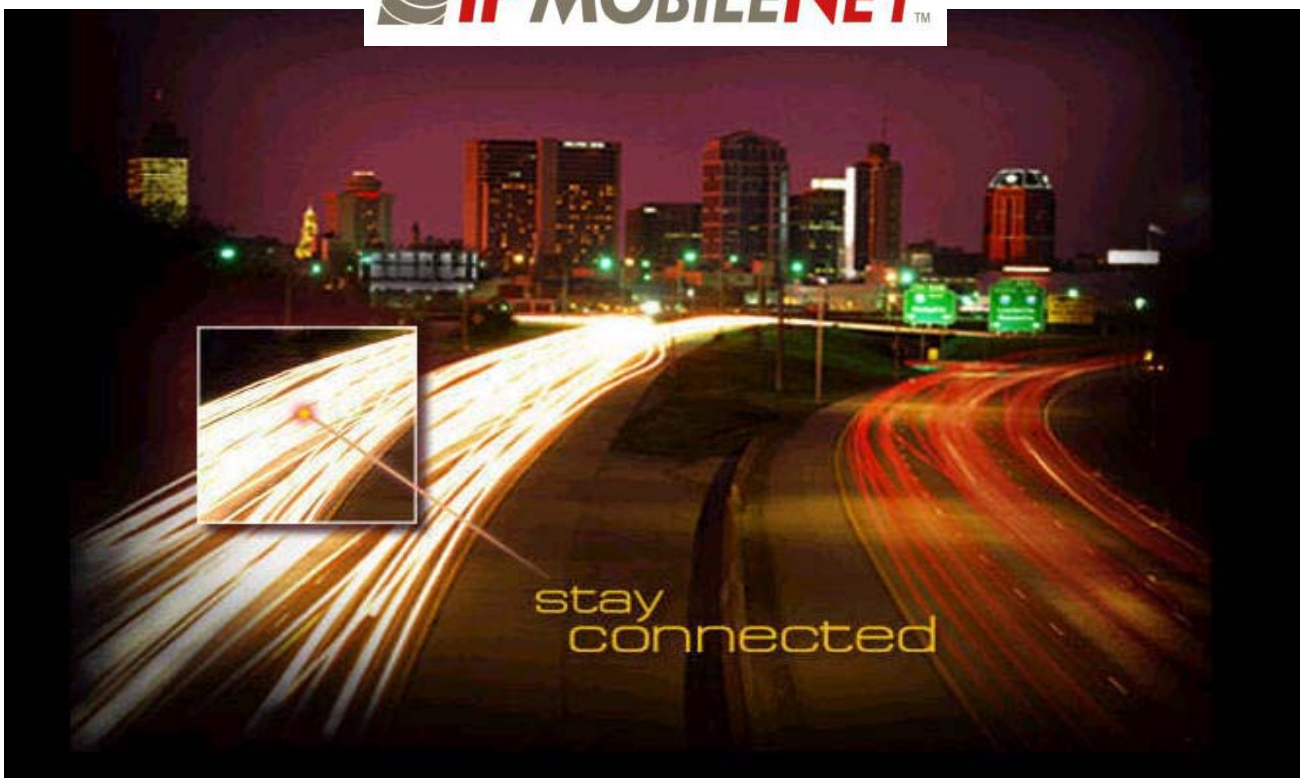

*IP*Series Mobile Radio User Manual

Released: April 8, 2003
IPMN p/n: 516.80495.UM
Revision: A

16842 Von Karman Avenue, Suite 200 Irvine, CA 92606
Voice: (949) 417-4590 Fax: (949) 417-4591
www.ipmobilenetinc.com

DOCUMENT REVISION CONTROL

Document Title: *IP*Series Mobile Radio User Manual

New Release Version: A

New Release Date	Previous Version	Action	Old Pages	*New Pages*
04/08/03	**X6**	**Release document**	**N/A**	**N/A**

COPYRIGHTS STATEMENT

The *IP*Series Mobile Radio User Manual is copyrighted to *IP*MobileNet, Inc.

All rights reserved. This document is confidential and proprietary information of *IP*MobileNet, Inc. The distribution or duplication of this document is expressly forbidden without *IP*MobileNet's prior written consent.

Disclaimer. While reasonable efforts were made to ensure that the information in this document was complete and accurate at the time of printing, *IP*MobileNet, Inc. can assume no responsibility for any inaccuracies. Changes and corrections to the information within this document may be incorporated in future releases.

TABLE OF CONTENTS

MANUAL COMPONENTS 5
Manual Purpose 5
Manual Contents 5
Manual Use 6
Audience 6

CHAPTER 1: INTRODUCTION 7
Product Description 7
Product Functionality 7
External Features 8
Product Specifications 9
Theory of Operation 10
Block Diagram Definitions 10

CHAPTER 2: BASIC NETWORK CONFIGURATIONS 12
Basic Network Connection 12
Network Connection to an Existing LAN 13
Wireless High Speed Digital IP Voice and Data (over the Internet) 14

CHAPTER 3: SETUP AND CONFIGURATION SCENARIOS 15
Mobile Radio Setup Scenarios 15
Mobile Radio-to-Mobile Computer Setup 15
Mobile Radio-to-VIU-to-Mobile Computer Setup 16

CHAPTER 4: PRODUCT INSTALLATION 17
Installation Overview 17
Installation Requirements 17
Installation Instructions 20
Pre-Installation Guidelines 20
Mounting the Mobile Radio 21
Serial Cable Connection and Routing 22
Ethernet Setup 22
Delay Time Installation 22
Carling Switch Installation 24
Mobile Radio Power Supply Installation 25
Antenna Configuration 26
Measuring Return Loss 27
Measuring Voltage Standing Wave Ratio 28
Measuring Insertion Loss 27
Voice Interface Unit Connections 28
Post Installation Checklist 30
Mobile Installation Layout Diagrams 31
Vehicle Unit Wiring Interconnection Layout 31
Mobile Antenna Distance Matrix 31
Diversity Antenna Mobile Installation Detail (Typical Installation) 32
Vehicle Unit Wiring Interconnection Layout (with Voice Interface Unit) 32
Preliminary Testing and Troubleshooting 33
Checklist of Required Materials 33
Base Station Setup for Testing 34
Preliminary Test Procedure and Troubleshooting 35

TABLE OF CONTENTS

CHAPTER 5: PROGRAMMING INSTRUCTIONS 38
Enabling Ethernet for Static IP Address Update in the Mobile Radio 38
Viewing Mobile Radio's Configuration Data 40
Changing the Mobile Radio's IP Address 40
Changing the Mobile Radio's Parameters 40
Factory Default Save and Restore 43

CHAPTER 6: CUSTOMER SUPPORT 44

APPENDIX A: Mobile Radio *IP*Message Parameters 45

FIGURE LISTING 48

GLOSSARY 49

INDEX 53

Manual Purpose

The purpose of the *IP*Series IPM Mobile Radio User Manual is to provide *IP*MobileNet dealers and customers with the necessary information required to install, operate, and troubleshoot problems with the mobile radio.

Manual Contents

This user manual contains the following sections:

- Chapter 1: Introduction

  The *Introduction* provides a description of the mobile radio as well as a general overview of its functionality, how it operates, product interfaces, package contents at shipment, and theory of operation with a block diagram and block definitions.

- Chapter 2: Basic Network Configurations

  Basic Network Configurations provides a series of network diagrams depicting possible network configurations.

- Chapter 3: Setup and Configuration Scenarios

  Setup and Configuration Scenarios provide the diagrams and information required for the two (2) possible setup methods for the mobile radio.

- Chapter 4: Product Installation

  Product Installation provides installation diagrams and instructions for installing the mobile radio and other required components.

- Chapter 5: Programming Instructions

  Programming Instructions provides programming and setup instructions for setting up the mobile radio and its interfaces.

- Chapter 5: Customer Support

  Customer Support provides instructions for ordering parts, documentation support, and reporting problems.

- Appendix A: Mobile Radio *IP*Message Parameters

- Figure Listing

- Glossary

- Index

Manual Use

Special icons appear throughout this manual to emphasize important information related to the chapter in which the icons are found. The definitions for these icons are listed below.

It is imperative that the user read this section carefully prior to continuing to the next chapter of this user manual.

TABLE 1: ICON HELPS		
ICON	**INDICATES**	**DEFINITION**
	NOTE	This icon indicates that a note follows highlighting or stressing a special point.
	PROCEDURE	This icon indicates that the section that follows contains a procedure.
	CAUTION	This icon indicates that a precautionary message follows. Carefully read the message following this icon and proceed with caution.
	TROUBLESHOOTING	This icon indicates that a troubleshooting strategy follows.

Audience

This user manual is intended for specific use by *IP*MobileNet, Inc. staff, dealers, and customers. This user manual is not to be reproduced without expressed written consent of *IP*MobileNet Management.

Product Description

✎ The content of this manual applies to all frequency ranges of the *IP*Series Mobile Radio, unless otherwise specified. This manual will note key differences when appropriate.

The *IP*Series Mobile Radios are intelligent devices designed for the challenging requirements of mobile data and voice applications. Mounted in vehicles, other intelligent devices may connect to the serial or Ethernet ports for connectivity back to the Internet Protocol Network Controller (IPNC) and other such servers. The *IP*Series Mobile Radio provides the mobile link to land-based wired networks. The mobile radio circuit boards are built using surface mount technology (SMT) and through-hole components.

Figure 1: *IP*Series Mobile Radio (Front View)

Product Functionality

The mobile radio utilizes a high-performance, 4-level Frequency-Shift Keying (FSK) wireless data modem; a multi-layered approach to signal reliability, including patented multi-receiver Intelligent Diversity Reception™; data scrambling; data interleaving; Forward Error Correction (FEC); and Viterbi soft-decision algorithms, providing up to 20 dB improvement in Signal-to-Noise Ratio (SNR) in low signal-to-noise environments. This assures a very high message success rate even while transferring large blocks of data at high vehicle speeds. The mobile radio features a low-power consumption, high performance integrated GPS receiver. Embedding this technology in the mobile radio lowers the cost of acquiring GPS data from vehicles and ensures optimal performance.

The *IP*Series Mobile Radio technology includes *IP*MobileNet's Diversity Reception (DR) capability. DR reduces the effects of fades in multi-path environment. With the use of two (2) antennas mounted at a calculated distance on the roof of the vehicle (refer to the section in Chapter 4 titled Antenna Configuration) the Diversity Reception System (DRS) minimizes the effects of fading by intelligently selecting the receiver with a better signal.

✎ Diversity is most effective when the vehicle is in motion.

External Features

As seen in Figure 2 below, the *IP*Series Mobile Radio technology is enclosed in a compact and sturdy aluminum case.

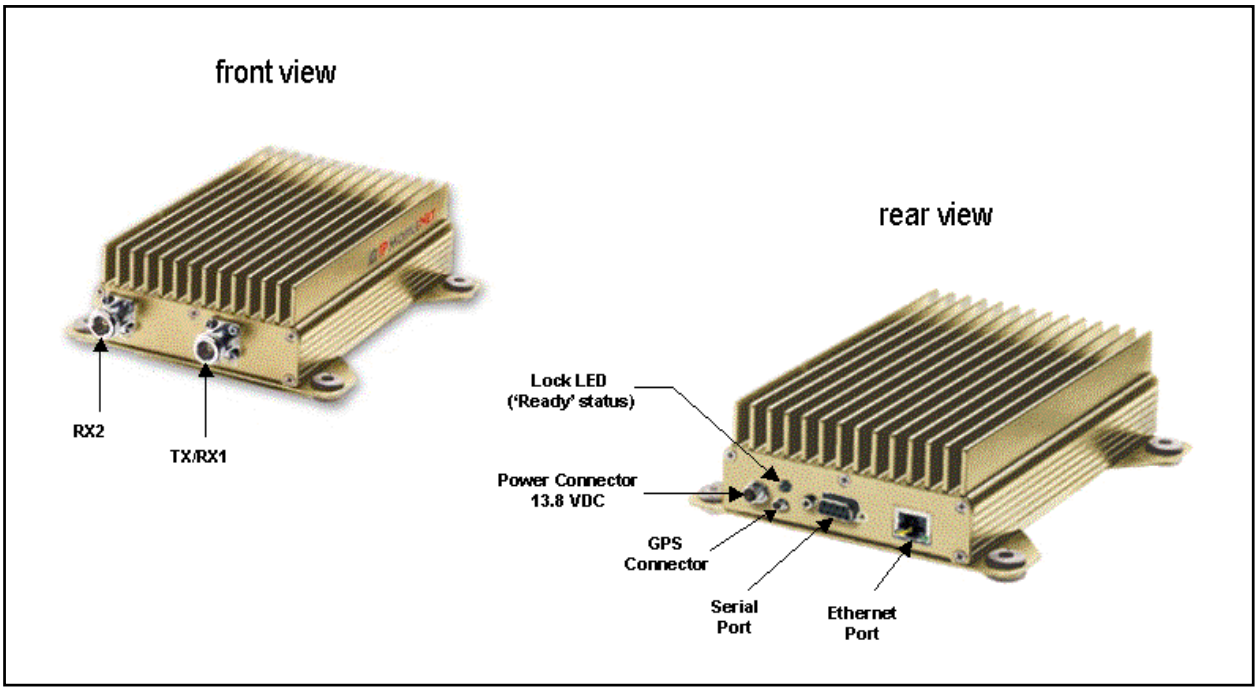

Figure 2: *IP*Series Mobile Radio (External Features)

The mobile radio external features consist of the following components:

TABLE 2: EXTERNAL FEATURES

FEATURE	DESCRIPTION
TX/RX1	Transmitter / Receiver 1 antenna connection
RX2	Receiver 2 antenna connection
Power Connector	13.8 VDC mobile radio power connector
Lock LED	Unit 'Ready' Status Indicator LED (light emitting diode)
GPS	GPS antenna (3V) connector
Serial Port	RS232 Serial Line Internet Protocol (SLIP) interface port
Ethernet Port	10 Base T Ethernet interface port

Product Specifications

TABLE 3: PRODUCT SPECIFICATIONS

GENERAL SPECIFICATIONS

PARAMETER	Model IPM1	Model IPM4	Model IPM8
Frequency range	135 to 175 MHz	400 to 512 MHz	806 to 869 MHz
channel spacing / speed	12.5 kHz / 9600 bps 25.0 kHz / 19200 bps	12.5 kHz / 9600 bps 25.0 kHz / 19200 bps	12.5 kHz / 9600 bps 25.0 kHz / 19200 bps
mode of operation	half-duplex, diversity reception	half-duplex, diversity reception	half-duplex, diversity reception
operating temperature range	-30C to +60C (-22F to +140F)	-30C to +60C (-22F to +140F)	-30C to +60C (-22F to +140F)
power supply voltage	13.8 VDC +/-20%	13.8 VDC +/-20%	13.8 VDC +/-20%
power supply	<0.2 amps receive	<0.2 amps receive	<0.2 amps receive
current consumption	16 amps transmit	13 amps transmit	8 amps transmit
number of channels	256	256	256
intelligent diversity reception	dual receiver, diversity reception	dual receiver, diversity reception	dual receiver, diversity reception
antenna connections	Two (2) type “N” jacks (tx/rx1, rx2)	two (2) type “N” jacks (tx/rx1, rx2)	two (2) type “N” jacks (tx/rx1, rx2)
interface connection	RS232 serial port connector or RJ45 Ethernet 10 Base T	RS232 serial port connector or RJ45 Ethernet 10 Base T	RS232 serial port connector or RJ45 Ethernet 10 Base T
dimensions (HxWxD / lbs)	2” X 4.5” X 8” / 2.5 lbs	2” X 4.5” X 8” / 2.5 lbs	2” X 4.5” X 8” / 2.5 lbs
Regulatory	FCC Part 90 and Part 15	FCC Part 90 and Part 15	FCC Part 90 and Part 15

***IP*SERIES MOBILE RADIO TRANSMITTER SPECIFICATIONS**

PARAMETER	Model IPM1	Model IPM4	Model IPM8
frequency stability	+/- 1.5 ppm @ operating temp	+/- 1.5 ppm @ operating temp	+/- 1.0 ppm @ operating temp
emission designator	20K0F1D	20K0F1D	20K0F1D
spurious and harmonic	-61 dBc max	-59 dBc max	-56 dBc max
transmit power	60 watts	40 watts	20 watts
transmit attack time	less than 5 ms	less than 5 ms	less than 5 ms

***IP*SERIES MOBILE RADIO RECEIVER SPECIFICATIONS**

PARAMETER	Model IPM1	Model IPM4	Model IPM8
sensitivity (voice)	12.0 dB SINAD@ -119 dB max level	12.0 dB SINAD@ -118 dB max level	12.0 dB SINAD@ -118 dB max level
distortion	less than 3% @ 1.0 kHz	less than 3% @ 1.0 kHz	less than 3% @ 1.0 kHz
spurious response	85 dBm minimum	85 dBm minimum	85 dBm minimum
intermodulation distortion	75 dB minimum	75 dB minimum	75 dB minimum

GPS RECEIVER SPECIFICATIONS

general	L1 frequency, C/A code (SPS), 8-channel continuous tracking receiver, 32 correlators
protocols	TSIP, TAIP, and NMEA 0183

Theory of Operation

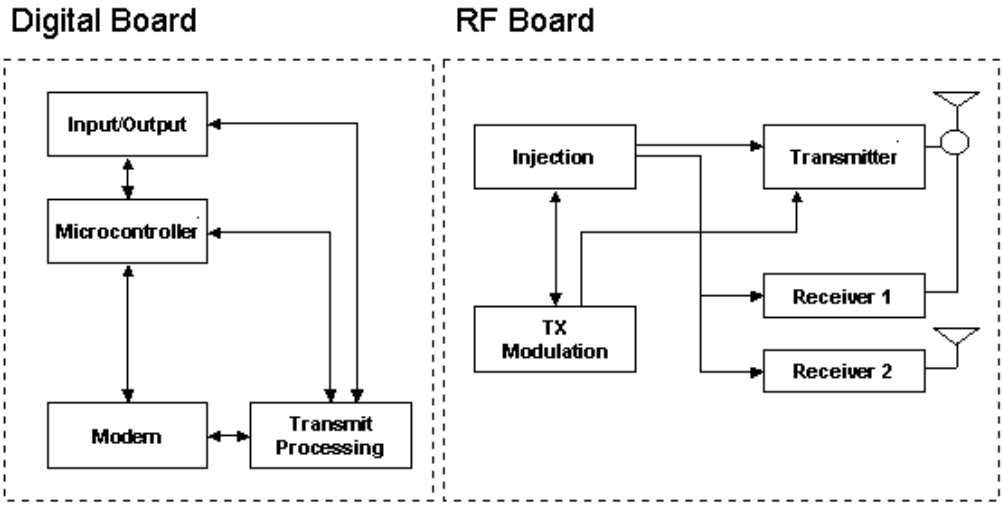

Figure 3: General Block Diagram

Block Diagram Definitions

For increased data security, the modem supports the Federal Government developed Digital Encryption Standard (DES) data encryption and decryption protocols. This capability requires installation of third party, Internet Protocol (IP) compliant DES encryption and decryption software on the system.

The *IP*Series Mobile Radio is comprised of two (2) sections, the digital section and the RF (radio frequency) section.

The digital circuit board contains the following sections:

Input/Output — Circuitry associated with the following data connectors:

- RS232 Serial Port DB9 Data Connector
- RJ45 Ethernet 10 Base T Interface Connection

For further details on the Ethernet Controller refer to the Crystal LAN™ Ethernet Controller Product Bulletin (CS8900A-EthernetCtrlr.pdf) available on the Product Documentation CD.

Microcontroller — Manages the operation of the mobile radio, the modem, and determines which receiver provides a better signal from a given transmission. Also provides transmit time-out protection in the event a fault causes the mobile radio to halt in the transmit mode.

Modem — Converts serial data into an analog audio waveform for transmission and analog audio from the receiver to serial data. Within a single chip it provides forward error detection and correction, bit interleaving for more robust data communications, and third generation collision detection and correction capabilities.

Power Supply The power supply creates the various voltages required by the digital portion of the mobile radio.

The RF circuit board contains the following sections:

Transmit Processing Circuitry that amplifies the analog audio signal from the modem and uses it to modulate the voltage-controlled oscillator (VCO) and reference oscillator in the injection synthesizer section. Modulating the VCO and reference oscillator simultaneously results in a higher quality FM signal.

Injection Synthesizer Provides programmable, ultra stable signals for the mobile radio. Synthesizer incorporates phase lock loop technology used for both receiving and transmitting.

Injection In the receive mode, the synthesizer provides a local oscillator signal of 45 MHz above or below the selected receive channel frequency.

Transmitter Consists of an exciter and power amplifier module. The transmitter covers the various frequency bands in segments. A different power amplifier module is required for each segment. The transmitter circuitry includes a T/R switch switching the antenna between transmitter and receiver 1 (TX/RX1).

Receiver 1/Receiver 2 Required to support the mobile DRS; two (2) discrete receivers are tuned to the same channel and use two (2) antennas.

The receivers are double-conversion superheterodyne with a first Intermediate Frequency (IF) of 45 MHz and a second IF frequency of 455 KHz. Each receiver consists of bandpass filters, an RF amplifier, a MMIC mixer, crystal filters, and a one-chip IF system. The injection synthesizer provides the first local oscillator signal. Outputs from each receiver include RSSI and analog audio for the baseband routing circuitry and modem.

For further details on the integrated GPS unit, refer to the Lassen GPS Unit Specification (Lassen-GPSUnitSpec.pdf) available on the Product Documentation CD.

Basic Network Configurations

This section provides basic network connection samples to help the user better understand some of the possibilities in setting up their respective systems.

Basic Network Connection

Figure 4 depicts a basic network connection for a network inclusive of one (1) Internet Protocol Network Controller (IPNC) and a range of base stations, mobile radios, VIUs (voice interface units), mobile computers, and additional components that can interface with the system.

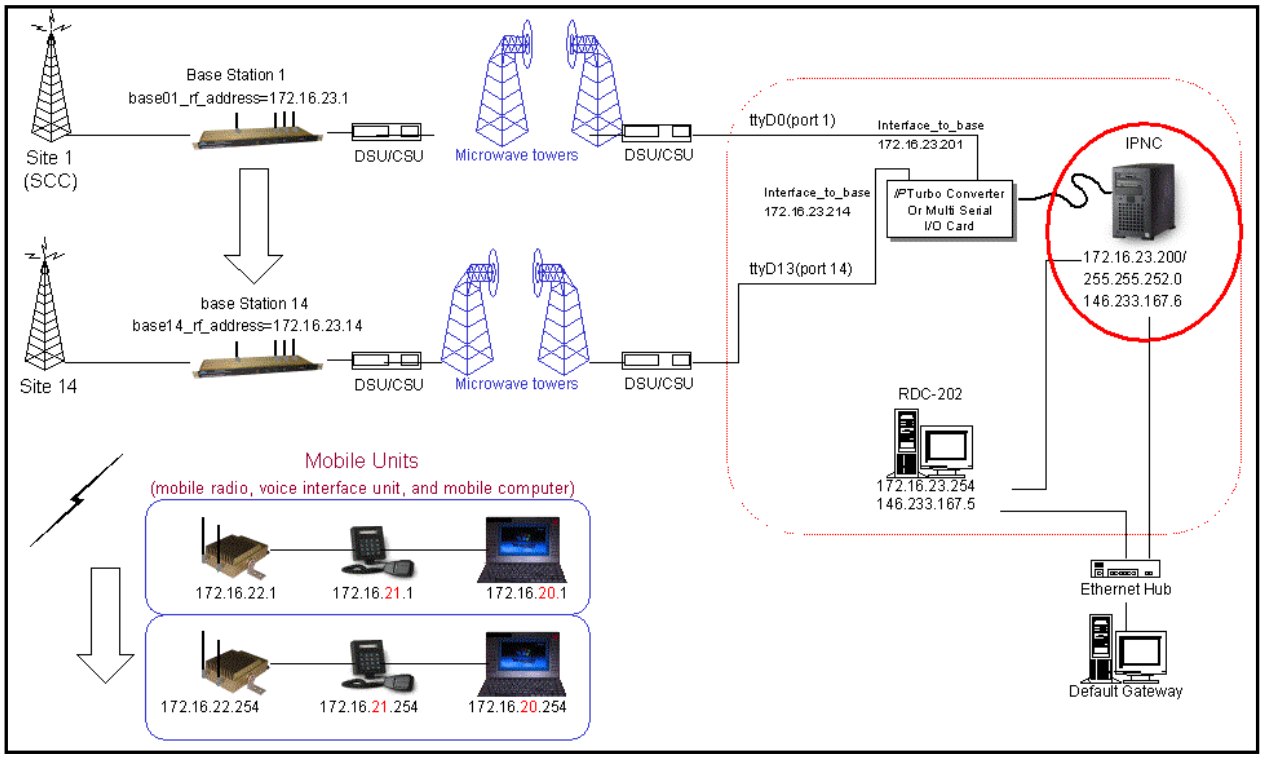

Figure 4: Basic Network Connection

Network Connection to an Existing LAN

Figure 5 depicts network connection to an existing LAN (local area network) inclusive of one (1) IPNC, one (1) base station, and a range of mobile radios, VIUs, mobile computers, and additional components that can interface with the system. This diagram also shows a LAN VIU as well as Terminal Server VIU.

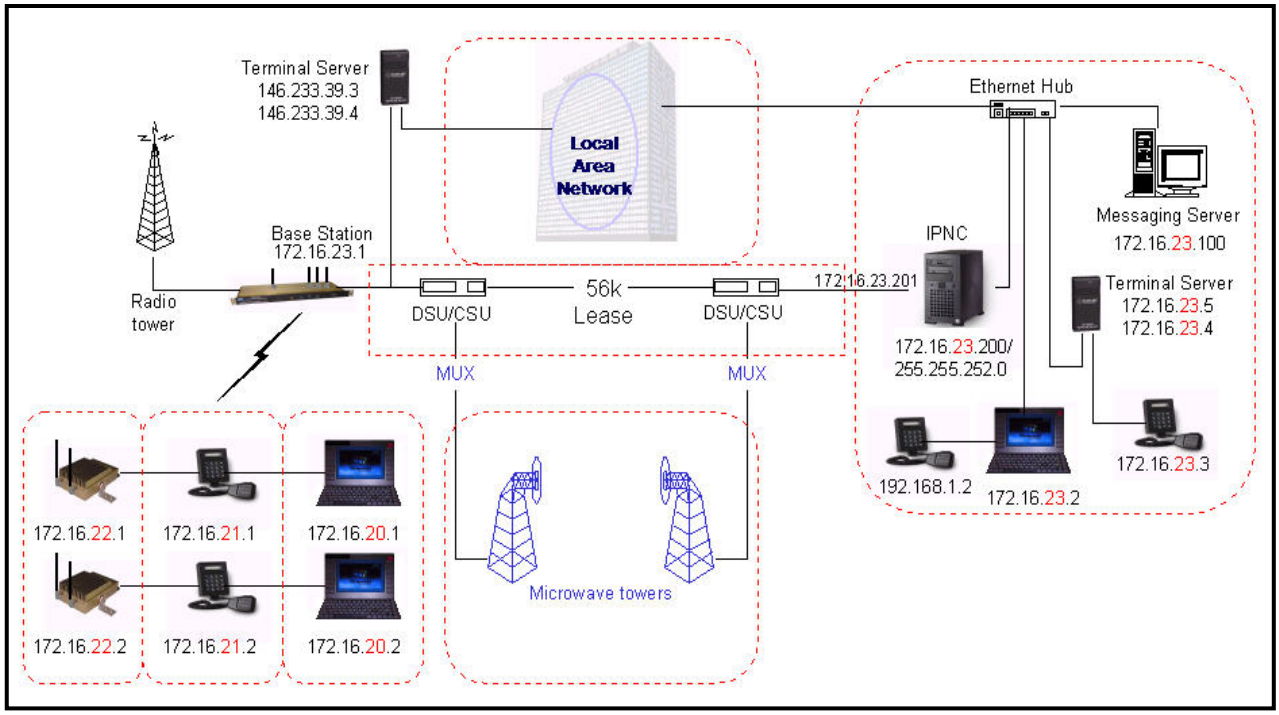

Figure 5: Network Connection to an Existing LAN

Wireless High Speed Digital IP Voice and Data (over the Internet)

Figure 6 depicts a variety of wireless data and voice networks on different frequencies.

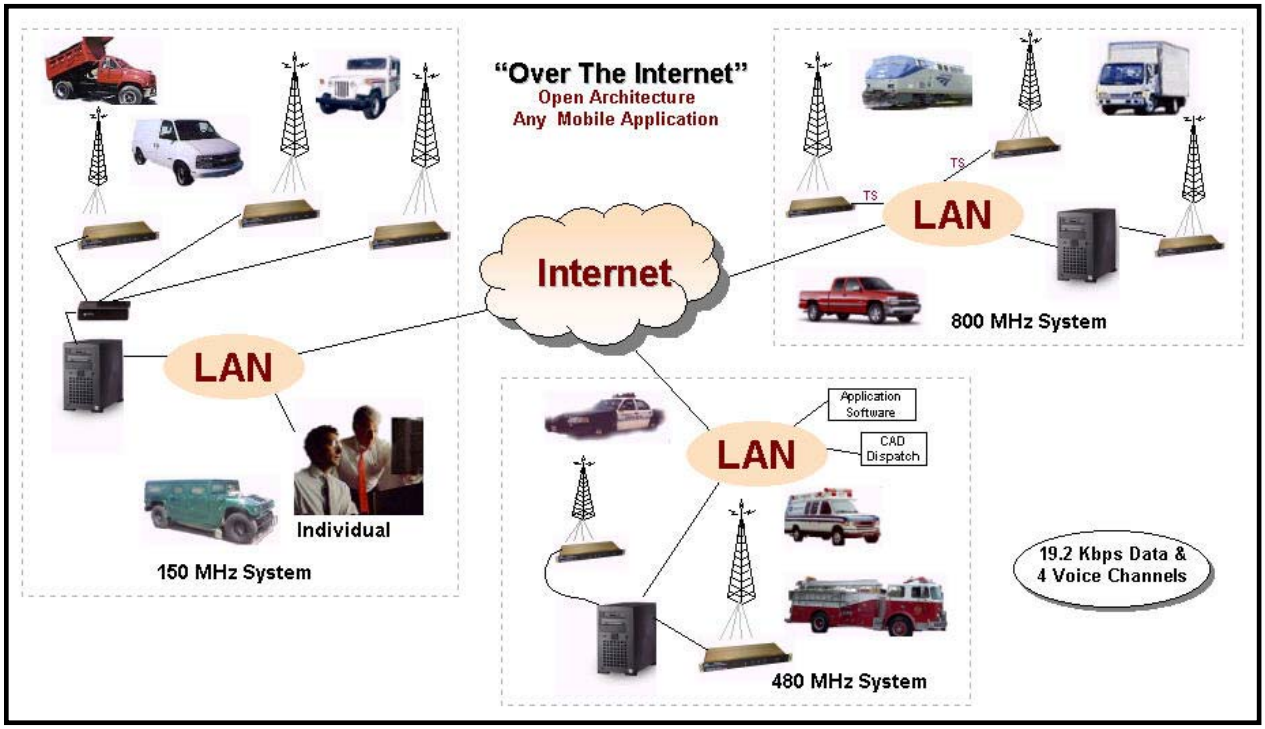

Figure 6: Wireless High Speed Digital IP Voice & Data (over the Internet)

Mobile Radio Setup Scenarios

The following describes the two (2) methods of setting up a mobile radio in a vehicle:

- Mobile Radio-to-Mobile Computer
- Mobile Radio-to-VIU-to-Mobile Computer

Mobile Radio-to-Mobile Computer Setup

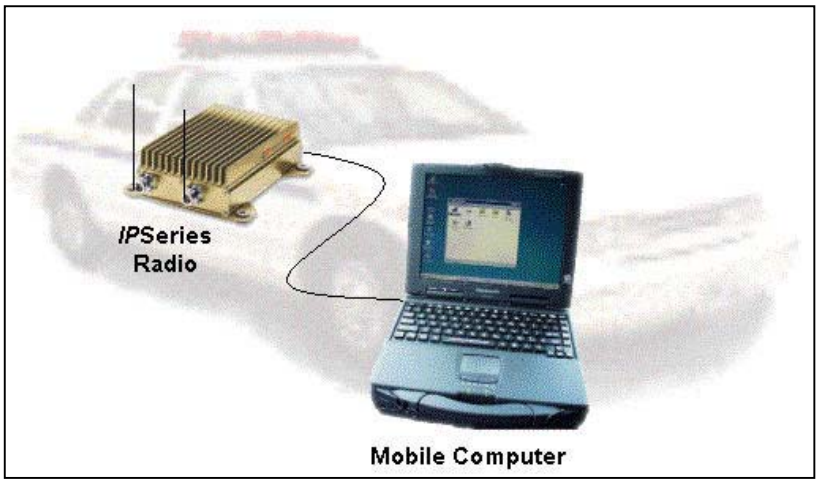

Figure 7: Mobile Radio-to-Mobile Computer Setup

To setup a mobile radio-to-mobile computer configuration, additional components are required, as listed in Table 4:

TABLE 4: MOBILE RADIO-TO-MOBLE COMPUTER COMPONENTS REQUIRED FOR INSTALLATION

QTY	DESCRIPTION
1	IPM Mobile Radio
1	Mobile Computer
1	20-foot serial cable (DB9F – DB9M)
1	Mobile Radio SLIP Port Driver Installation Diskette

✎ If using the mobile radio's Ethernet feature an Ethernet crossover cable is required to replace 20-foot serial cable.

To configure the mobile radio and computer for this type of setup, follow the instructions on pages 2 through 17 in the ***Mobile Computer Setup for Communication with the Mobile Radio Installation Guide*** (IPMN p/n: 516.80310.IG) available on the Product Documentation CD.

Mobile Radio-to-VIU-to-Mobile Computer Setup

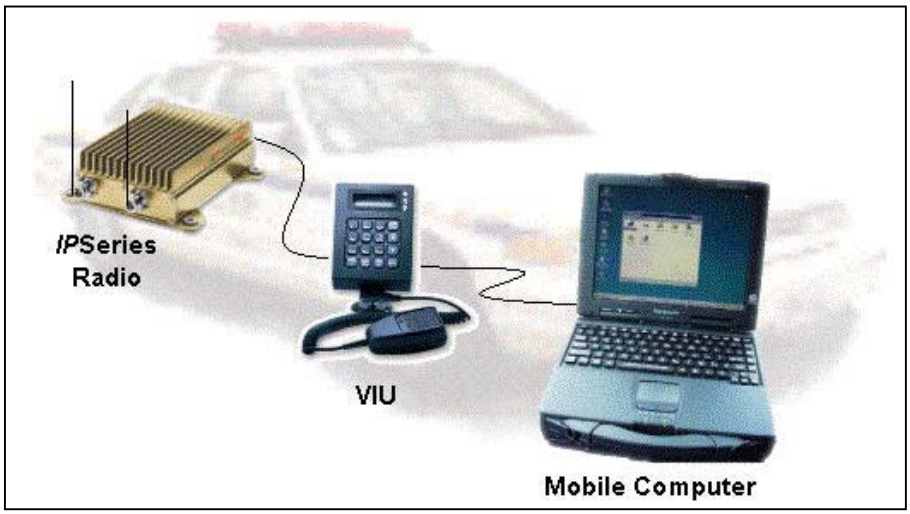

Figure 8: Mobile Radio-to-VIU-to-Mobile Computer Setup

To setup a mobile radio-to-VIU-to-mobile computer configuration, additional components are required, as listed in Table 5:

TABLE 5: MOBILE RADIO-TO-VIU-TO-MOBLE COMPUTER COMPONENTS REQUIRED FOR INSTALLATION	
QTY	**DESCRIPTION**
1	IPM Mobile Radio
1	Mobile Computer
1	Voice Interface Unit (VIU)
1	20-foot serial cable (DB9F – DB9M)
1	10-foot serial cable (DB9F – DB9M)
1	Mobile Radio SLIP Port Driver Installation Diskette

✎ To configure the mobile radio, the voice interface unit, and the mobile computer for this type of setup, follow the instructions on pages 18 and 19 in the ***Mobile Computer Setup for Communication with the Mobile Radio Installation Guide*** (IPMN p/n: 516.80310.IG) available on the Product Documentation CD.

Installation Overview

This chapter provides the basic steps involved in the installation process of an *IP*Series Mobile Radio. This chapter includes wire routing and connections between the mobile radio, other components, and the vehicle's power.

To prevent personal injury and vehicle damage, exercise extreme caution throughout the installation process and follow the reminders listed below.

- Follow safety precautions for handling wiring, tools, and a vehicle's engine.
- Handle the vehicle's battery with extreme caution to avoid burns.
- **Do not** alter the components listed in the Installation Requirements section below, unless substitutions are noted within this chapter.
- Once the antennas are installed, as directed within this user manual, all persons must maintain a distance of no less than 39 inches from the antennas.

Installation Requirements

Table 6 lists the documents required to successfully install the mobile radio and connect to the various components within the vehicle:

TABLE 6: DOCUMENTS REQUIRED FOR MOBILE RADIO INSTALLATION

DESCRIPTION	PART NUMBER
The following documents are available on the Product Documentation CD enclosed in the shipment with the mobile radio:	480.0001.001
▪ *IP*Series Mobile Radio User Manual	516.80495.UM
▪ Installation Guide for Mobile Computer Setup for Communication with the Mobile Radio	516.80310.IG
▪ Confirming Mobile Radio Receiver Sensitivity	TN01-0027

Table 7 lists the components required to perform a successful mobile radio installation and are available for purchase through *IP*MobileNet, Inc.

TABLE 7: MOBILE INSTALLATION ACCESSORIES KIT

QTY	DESCRIPTION	PART NUMBER
4	Screws, Self Tapping #10 X 5/8	37040010-10
1	EMI Filter	127-0020-002
1	Timer, 2 hours	150-0127-004
1	Relay	128-0117-001
1	Relay Socket	128-0116-001
2	Butt Connectors #8 AWG	120-0256-001
1	Terminal, Ring #8 AWG, #10 Screw Insulated	120-0127-001
4	Terminal, Ring #18-22 AWG, #10 Screws Insulated	120-0250-004
4	Terminal, Ring #10-12 AWG, #10 Screws Insulated	120-0250-005
4	Terminal, Disconnect #14-16 F	120-0244-002
18	Terminal, Disconnect #10-12 F	120-0244-003
2	Disconnect Tab, Quad Male	200-1377-001
1	Wire, 12 AWG Black, order 5 ft.	156-0242-001
1	Wire, 12 AWG Red, order 44 ft.	156-0242-003
1	Fuse, 15 AMPS ATO	122-0042-003
2	Fuse, 30 AMPS ATO	122-0042-001
3	Fuse Holder, 12 AWG	120-0253-001
1	Switch, Toggle DPST	144-0136-001
1	Diagram, Mobile Installation without VIU (*see page 31)*	502-80259
1	Diagram, Mobile Installation with VIU (*see page 32)*	502-80260

Table 8 lists the auxiliary equipment required to complete the installation process.

TABLE 8: AUXILIARY EQUIPMENT

QTY	DESCRIPTION	PART NUMBER
1	Serial Cable (DB9MF), 20 ft.	156-0245-020
1	Wire, 8 (133/29) AWG VW-1 Red, by foot, order 19.5 ft.	156-0243-003
1	Wire, 8 (133/29) AWG VW-1 Black, by foot, order 19.5 ft.	156-0243-001
2	RG58U Cable and Mount, VHF, 17 ft. (incl ¾" Brass Mount and N Male Crimp)	102-0200-001
2	RG8X Cable and Mount, UHF & 800 MHz, 17 ft. (incl ¾" Brass Mount & N Male Crimp)	102-0200-002
2	Antenna, ¼ Wave, 136-144 MHz	102-0204-001
2	Antenna, ¼ Wave, 144-152 MHz	102-0204-002
2	Antenna, ¼ Wave, 152-162 MHz	102-0204-003
2	Antenna, ¼ Wave, 162-174 MHz	102-0204-004
2	Antenna, Radome Type, 410-430 MHz, 3dB Gain (requires 1 MB8XN for ea antenna)	102-0206-001
2	Antenna, Radome Type, 430-450 MHz, 3dB Gain (requires 1 MB8XN for ea antenna)	102-0206-002
2	Antenna, Radome Type, 450-470 MHz, 3dB Gain (requires 1 MB8XN for ea antenna)	102-0206-003
2	Antenna, Radome Type, 470-490 MHz, 3dB Gain (requires 1 MB8XN for ea antenna)	102-0206-004
2	Antenna, Radome type, 806-866 MHz, 3dB Gain (requires 1 MB8XN for ea antenna)	102-0207-001
2	Antenna, Radome Type 821-896 MHz, 3dB Gain (requires 1 MB8XN for ea antenna)	102-0207-002
2	Antenna, 5/8 Wave, 406-430 MHz, 3dB Gain (requires 1 MB8XN for ea antenna)	102-0199-003
2	Antenna, 5/8 Wave, 430-450 MHz, 3dB Gain (requires 1 MB8XN for ea antenna)	102-0199-004
2	Antenna, 5/8 Wave, 450-470 MHz, 3dB Gain (requires 1 MB8XN for ea antenna)	102-0199-005
2	Antenna, 5/8 Wave, 470-490 MHz, 3dB Gain (requires 1 MB8XN for ea antenna)	102-0199-002
2	Antenna, 5/8 Wave 490-512 MHz, 3dB Gain (requires 1 MB8XN for ea antenna)	102-0199-006
2	Antenna, 5/8 Wave, 806-866 MHz, 3dB Gain (requires 1 MB8XN for ea antenna)	102-0199-001
2	Antenna, ¼ Wave, 406-430 MHz, Unity Gain (requires 1 MB8XN for ea antenna)	102-0204-005
2	Antenna, ¼ Wave, 430-450 MHz, Unity Gain (requires 1 MB8XN for ea antenna)	102-0204-006
2	Antenna, ¼ Wave, 450-470 MHz, Unity Gain (requires 1 MB8XN for ea antenna)	102-0204-007
2	Antenna ¼ Wave, 470-490 MHz, Unity Gain (requires 1 MB8XN for ea antenna)	102-0204-008
2	Antenna, ¼ Wave, 490-512 MHz, Unity Gain (requires 1 MB8XN for ea antenna)	102-0204-009
2	Antenna, ¼ Wave, 806-896 MHz, Unity Gain (requires 1 MB8XN for ea antenna)	102-0204-010

Installation Instructions

Pre-Installation Guidelines

Prior to installing new equipment, perform the following steps:

1. Remove existing equipment and all related components to include stock clips on radio wiring harness and antenna.

2. As shown in Figure 9 below, mounting of the mobile radio, delay timer, relay, and EMI filter will take place in the trunk compartment, unless installing in a vehicle without a trunk (refer to page 31 for the full drawing).

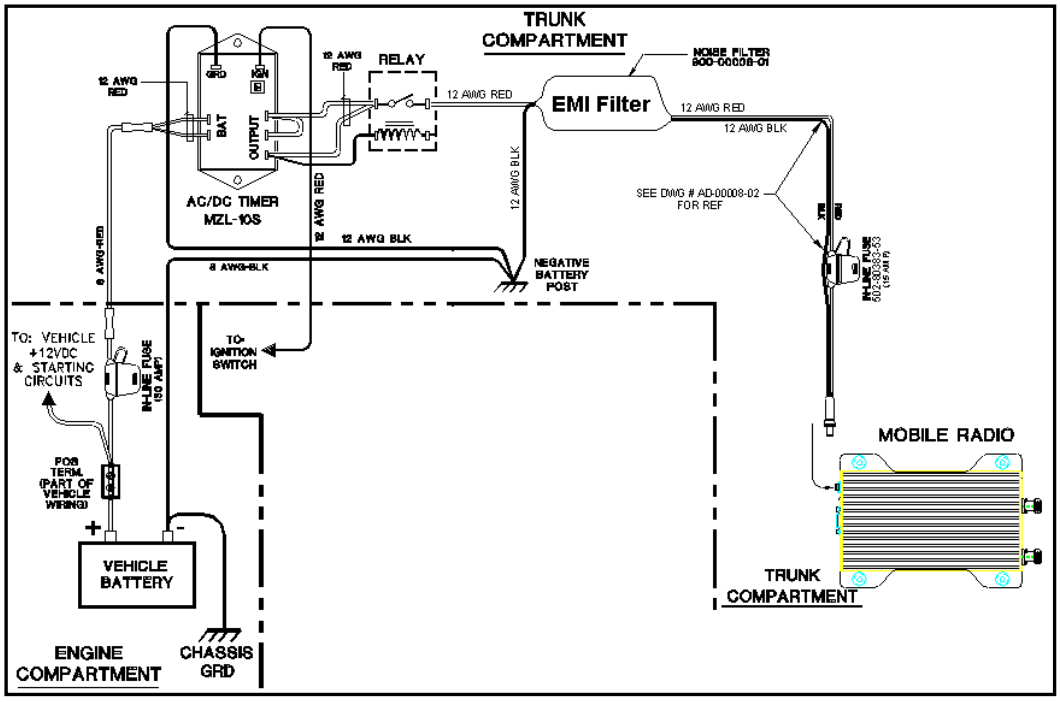

Figure 9: Trunk Compartment Installation

Removal of seats, rubber mats, and other obstructions, from inside the driver compartment, may be necessary to facilitate routing of wires to the engine and trunk compartments.

3. To ensure appropriate cable and wire routing, exercise the following precautions:

   - Route cables away from sharp edges that can penetrate cable insulation and damage wires.
   - Protect wires with silicone rubber grommets when routing through the engine compartment firewall or through other holes with sharp edges.
   - Use high-quality electrical tape when covering exposed wires in the engine compartment.
   - Avoid routing cables through areas exposed to extreme heat, such as the exhaust system.

- Keep wires routed through the engine compartment away from hot and/or moving parts.

4. Prior to drilling holes in the engine compartment firewall, inspect both sides to avoid obstructions.

5. For grounding point, use the engine block or the negative (-) terminal of the vehicle battery. Ground connection surfaces must be free of paint, rust, and other corrosion to maximize performance and avoid damage. Do not tie to the vehicle chassis.

6. To simplify troubleshooting problems, label all connecting points and wires.

Mounting the Mobile Radio

To mount the mobile radio, perform the following steps:

Step 1 As shown in Figure 10, secure the mobile radio into the trunk compartment. Insert four (4) sheet metal screws in the mobile radio brackets.

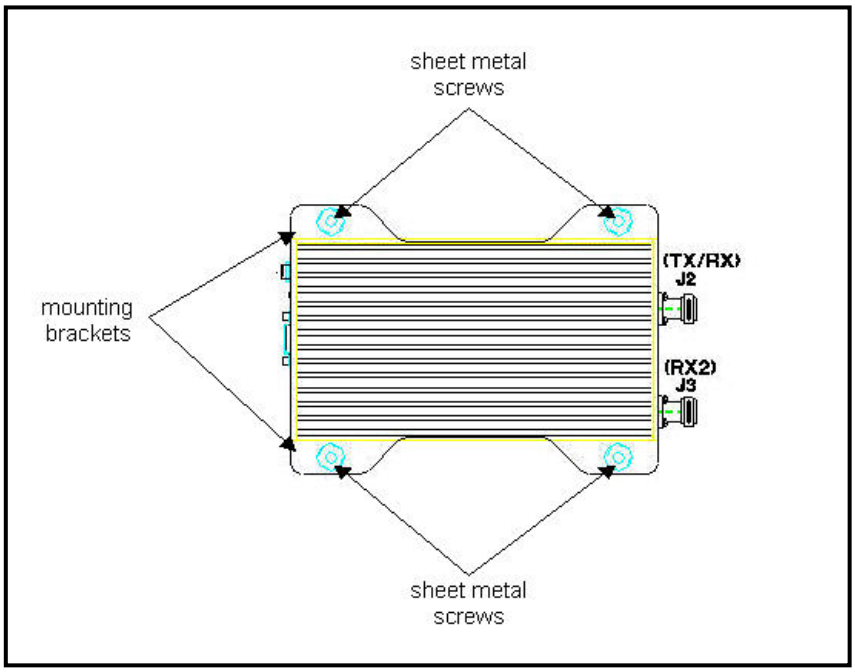

Figure 10: Mobile Radio Mounting

If less than four (4) screws are used, the mobile radio can become loose in the trunk compartment. This may cause the mobile radio not to function properly.

When inserting screws, be careful not to disturb the vehicle's gas tank.

Serial Cable Connection and Routing

The serial cable connects the mobile radio to the mobile computer located in the driver compartment.

To connect the serial cable, perform the following steps:

Step 1 Attach the 20-foot serial cable male connector (DB9M – see Figure 11) to the mobile radio.

Figure 11

Step 2 Route the female connector (DB9F – see Figure 12) to the driver compartment and connect to the serial port located on the rear of the mobile computer.

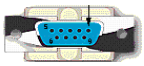
Figure 12

✎ Route the serial cable to minimize foot pressure and other potential stresses. Use split loom tubing and nylon cable ties for cable protection.

If connecting a Voice Interface Unit, see page 28 for instructions.

Ethernet Setup

The user also has the option to connect the mobile radio and the mobile computer via Ethernet.

To connect the Ethernet crossover cable, perform the following steps:

Step 1 Attach the Ethernet crossover cable (minimum 20 feet) to the Ethernet port on the rear of the mobile radio, as shown previously in Figure 2.

Step 2 Route the other end of the Ethernet crossover cable to the driver compartment and connect to the Ethernet port located on the rear of the mobile computer.

✎ Route the cable to minimize foot pressure and other potential stresses. Use split loom tubing and nylon cable ties for cable protection.

Note that if installing a Voice Interface Unit (VIU), the Ethernet setup cannot be used, as the VIU is a serial-only device.

Delay Timer Installation

To install the Delay Timer, perform the following steps:

Step 1 Secure Delay Timer to the trunk compartment of the vehicle inserting screws in the appropriate locations using care not to puncture the vehicle's gas tank.

Step 2 Route the black wire (#12 AWG) from ground connection on the Delay Timer to the vehicle chassis (see Figure 13).

Step 3 Route and wire red wire (#8 AWG) from the positive (+) terminal connection on the vehicle battery connection via the in-line fuse toward the battery connection on the Delay Timer.

Connect the red wire (#8 AWG) to the two red wires (#12 AWG). Route and wire the red (#12 AWG) wires to the two (2) battery connections on the Delay Timer.

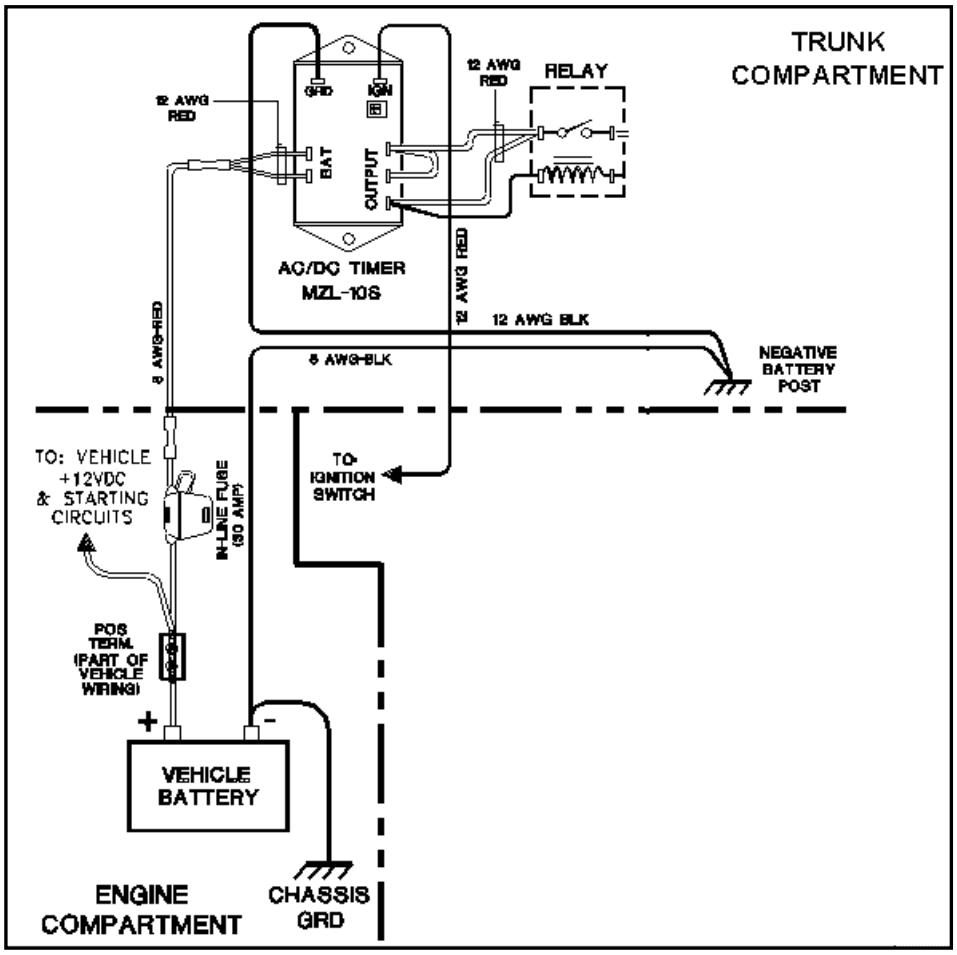

Figure 13: Delay Timer Installation

Step 4 Route a red wire (#12 AWG) from the ignition connection on the Delay Timer to the ignition switch in the driver compartment (see Figure 13). The ignition wire should be fused with 2A fuse.

Step 5 Route a red wire (#12 AWG) from the first and last output connections on the Delay Timer to the Automotive Power Relay.

Step 6 Route and wire a red (#12 AWG) wire from the second output connection on the Delay Timer to the last output connection on the Delay Timer.

Step 7 Route and wire a red (#12 AWG) wire from the last output connection on the Delay Timer to the Automotive Power Relay coil at the position shown in Figure 13.

Step 8 Route and wire a black (#8 AWG) wire from the junction (negative battery post group) in the trunk compartment to the negative (-) terminal on the vehicle battery.

Step 9 Wire the red (#12 AWG) wire to the battery input on the Delay Timer and route the black (#8 AWG) portion of the wire to the positive terminal on the battery via an in-line fuse (30 AMP).

Carling Switch Installation (DPST Heavy Duty Toggle)

To install the switch, perform the following steps:

Step 1 Mount the switch in the selected location.

Step 2 Route and wire a red wire (#12 AWG) from the switch to the Automotive Power Relay (see Figure 14).

Step 3 Ground the switch by routing and wiring a black wire from the switch to the negative battery post.

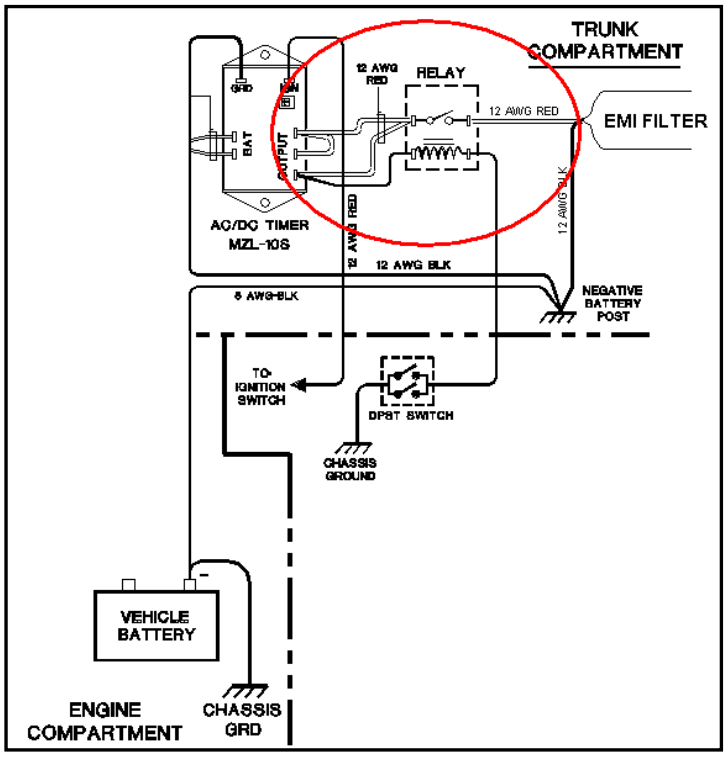

Figure 14: Carling Switch Installation

Mobile Radio Power Supply Installation

To install the mobile radio power connection, perform the following steps:

Step 1 Route and connect the power cable to the EMI filter, as shown in the figure below.

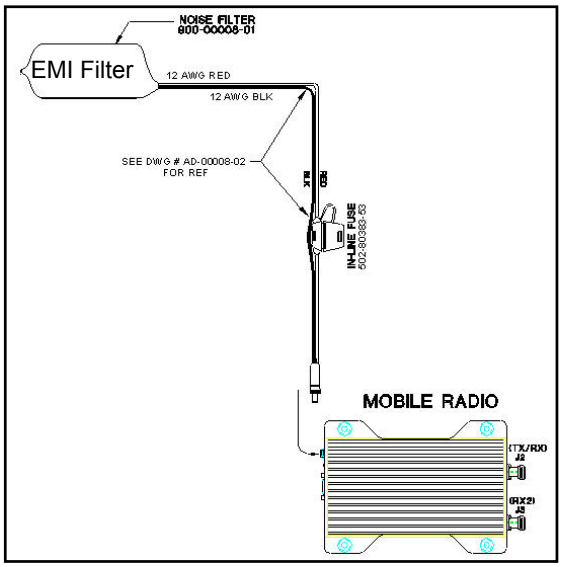

Figure 15: Power Supply Installation

Step 2 Route and connect the other end of the power cable to the rear of the mobile radio to the power connector (13.8 VDC) connection, as shown previously in Figure 2.

Antenna Configuration

Two (2) antennas are mounted and installed on the roof of the vehicle using specific measurements for distance.

To mount and install the antennas, perform the following steps:

Step 1 Install antennas (see Figure 16).

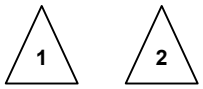

Observe correct separation between antennas (refer to Table 10: Mobile Antenna Distance Matrix). This table provides midpoint distance calculations and minimum and Near-Field Exclusion Zone (NFEZ) for proper diversity reception.

The NFEZ distance is an absolute minimum. The greater the distance between the antennas to any other surfaces will result in improved performance.

Step 2 Cut a mounting hole in the roof of the vehicle using an electric drill or hole saw.

The antenna-mounting hole provides ground connection to the antenna. Ensure that a metal-to-metal connection between the antenna shields exists.

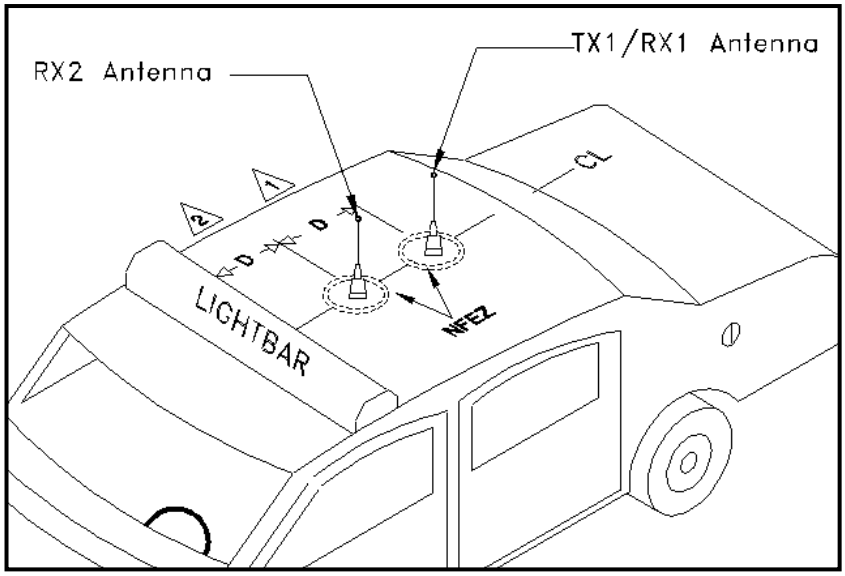

Figure 16: Antenna Distance Configuration

✎ Figure 16 represents the recommended front-to-rear antenna installation. The receiver antenna (RX2) should be the antenna nearest to the light bar.

Step 3 All antenna mounts must be environmentally tight. Install or use O-rings to seal the antenna base to the rooftop of the vehicle.

Step 4 Route the coaxial cables to the mobile radio through one of the hollow spaces in the roof supports into the trunk compartment where the mobile radio is mounted.

✎ Both antennas should be checked and tested to ensure they are functioning properly.

If these installation guidelines are followed, it is safe for persons to stand at a distance no less than 39 inches from the antennas.

Measuring Return Loss

The following test is performed without any power, thus can be performed immediately after the installation of the coax and antenna, following the installation of the N-type connector on the coax.

To measure Return Loss, perform the following steps:

Step 1 Select the appropriate Antenna Analysts to perform the test.

Step 2 Connect the antenna to be tested to the Antenna Analyst.

Step 3 Turn on the Antenna Analyst and the Return Loss (RETL) is displayed in dB to the left of the Voltage Standing Wave Ratio (VSWR) curve.

✎ The Return Loss Specification is –14 dBm or greater (with good antennas the typical range will be between –14 and –28).

Measuring Voltage Standing Wave Ratio

To measure the Voltage Standing Wave Ratio (VSWR) Reflected Power, perform the following steps:

Step 1 After selecting the appropriate Analyst and connecting the antenna to be tested, press **F1** to access the Analyst Menu.

Step 2 Press **F1** again to access the Display (DSPLY) menu, which lists the modes.

Step 3 Press **F2** to select the VSWR display mode. Plotting will resume and the VSWR value is highlighted.

✎ The VSWR Reflected Power Specification should be at a ratio of approximately 1.6 to 1.

Measuring Insertion Loss

To measure Insertion Loss of an unterminated length of coax, perform the following steps:

Step 1 Connect the antenna to be tested to the appropriate Antenna Analyst.

Step 2 Turn on the Antenna Analyst and the Return Loss is displayed in dB to the left of the VSWR curve.

✎ To switch from the RETL mode to VSWR mode, refer back to the previous set of instructions.

Step 3 Divide the result by two (2).

Voice Interface Unit Connections

If connecting a VIU, an additional 10-ft serial cable is required (IPMN p/n: 156-0245-010 included with VIU).

To connect the serial cables, perform the following steps:

Step 1 Attach 20-ft serial cable male connector (DB9M) to the mobile radio.

Step 2 Route the female connector (DB9F) to the driver compartment and connect to the serial port located on the rear of the VIU near the microphone hang up clip.

Step 3 Attach the 10-foot serial cable male connector (DB9M) to the other serial port located on the rear of the VIU.

Step 4 Route the female connector (DB9F) serial cable to the serial port located on the rear of the mobile computer.

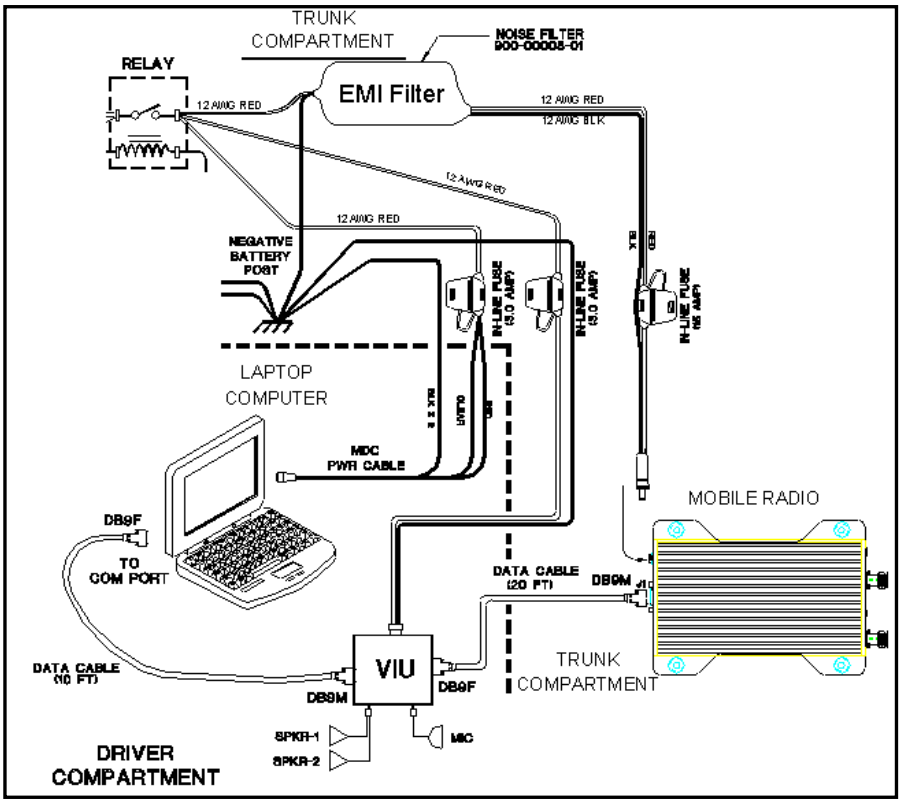

Figure 17: VIU Connections

To connect the VIU power supply, perform the following steps:

Step 1 Route the VIU's power supply cable from the driver compartment to the trunk compartment.

Step 2 Connect the red (#12 AWG) wire via an in-line fuse from the VIU power cable to the relay as shown in Figure 17 above.

Step 3 Attach the black (#12 AWG) wire of the VIU power cable to the ground connection on the vehicle chassis.

Post Installation Checklist

Table 9 lists the tasks that should be performed upon completing installation.

TABLE 9: POST INSTALLATION CHECKLIST

NO.	CHECKLIST ITEM	☑
1	Scope out the entire vehicle setup to locate any obvious problem areas.	☐
2	Check wiring for safety concerns.	☐
3	Use tie wraps to ensure that all wires routed in parallel are bundled together.	☐
4	Check to see if any wires are exposed.	☐
5	If any wires are exposed, use electrical tape to cover. ✎ When covering wires in the engine compartment, use high-quality electrical tape.	☐
6	Perform appropriate testing as described in this guide to ensure mobile radio works properly.	☐

Once installation is completed, remove all debris and restore dismantled parts and rubber mats to appropriate locations.

Mobile Installation Layout Diagrams

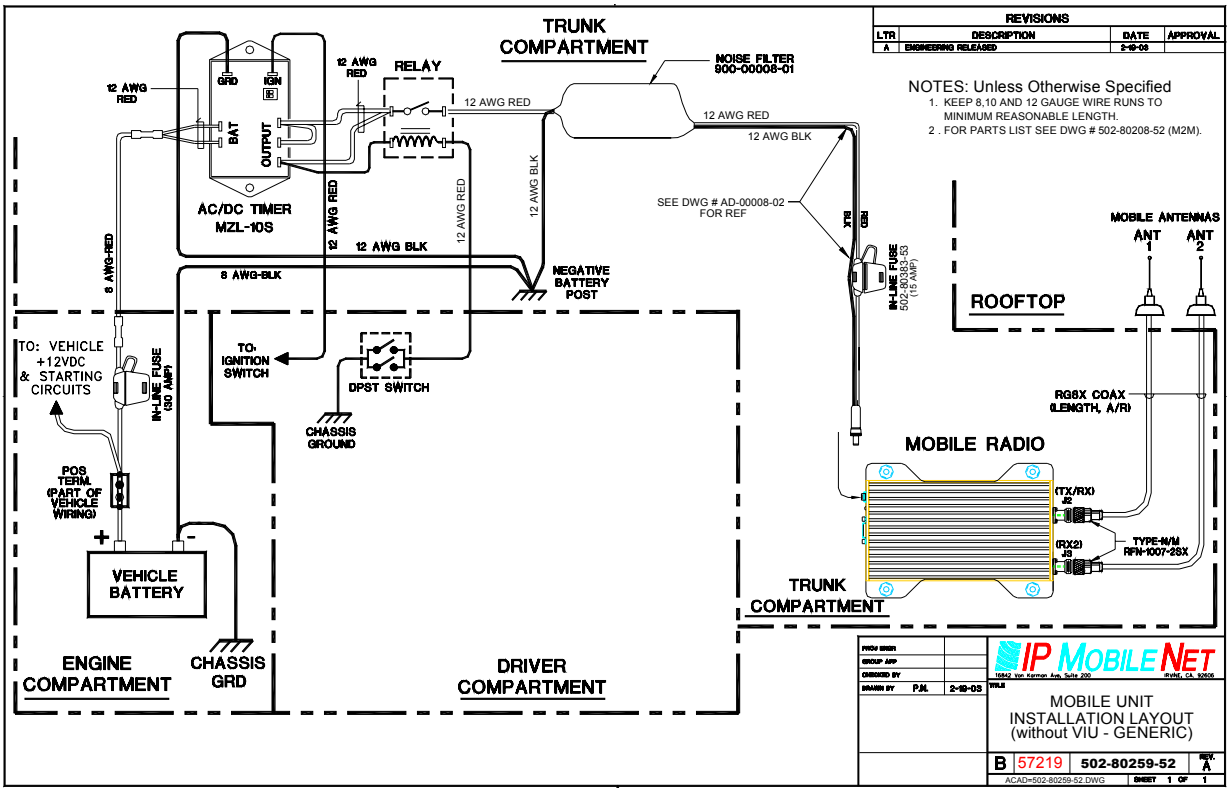

Figure 18: Vehicle Unit Wiring Interconnection Layout

Table 10 lists the mobile radio antenna distances by frequency band.

Table 10: Mobile Antenna Distance Matrix

Frequency Band in MHz	Center Frequency in MHz	Antenna Spacing for ¼ Wave Ant (inches)	Wavelength (inches)	Near-Field Exclusion Zone* (inches)	¼ Wave Length (inches)
130-140	135	65.4	87.3	10.9	21.8
140-150	145	61.2	81.4	10.2	20.4
150-160	155	57.0	76.2	9.5	19.0
160-174	167	53.1	70.7	8.9	17.7
400-430	415	21.3	28.5	3.5	7.1
430-450	440	20.1	26.8	3.4	6.7
450-470	460	19.2	25.7	3.2	6.4
470-490	480	18.6	24.6	3.1	6.2
490-512	501	17.7	23.6	2.9	5.9
806-821	814	10.8	14.5	1.8	3.6

*NFEZ = Minimum Near-Field Exclusion Zone **Round antenna spacing to the nearest ⅛”

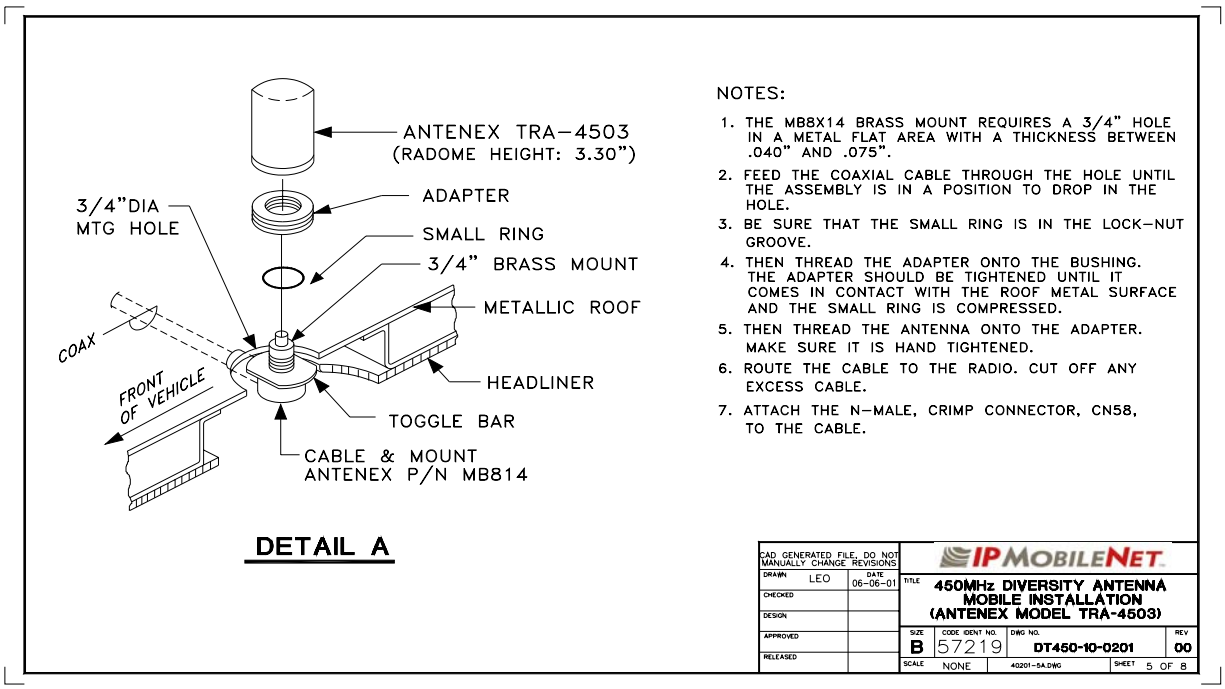

Figure 19: Diversity Antenna Mobile Installation Detail (Typical Installation)

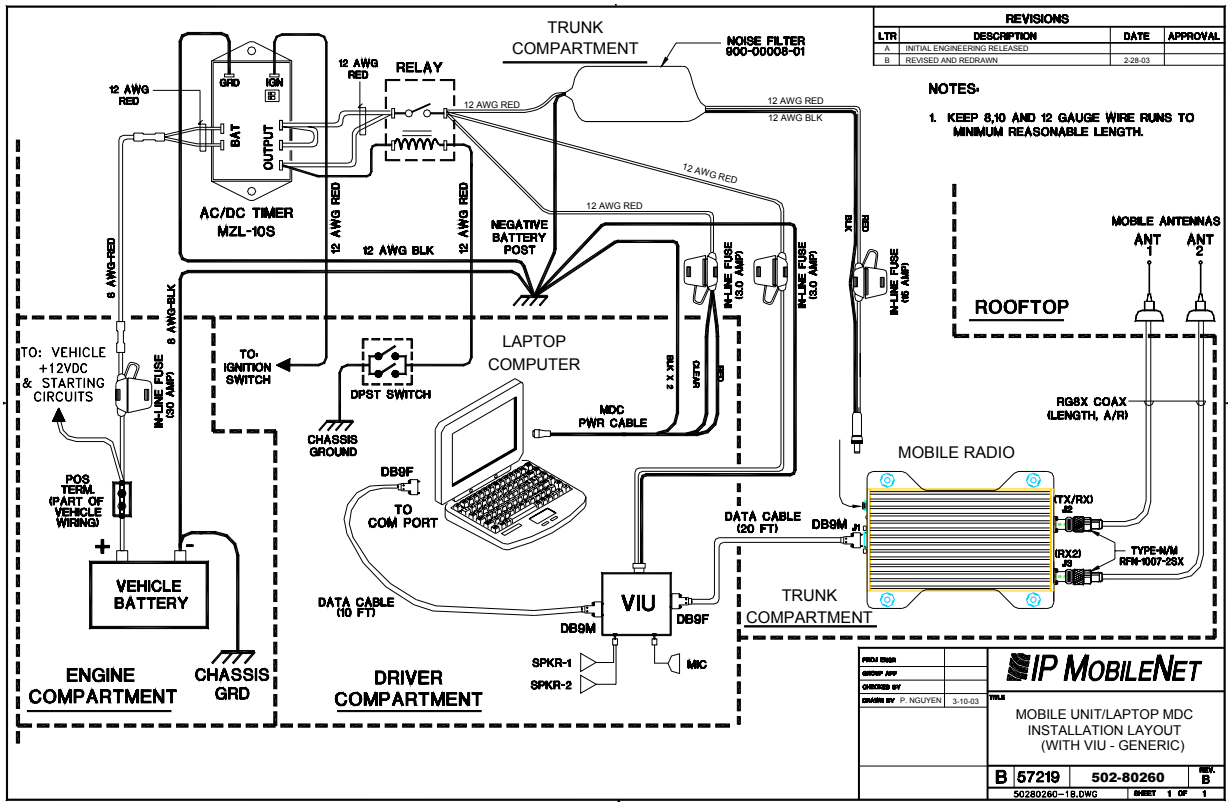

Figure 20: Vehicle Unit Wiring Interconnection Layout (with Voice Interface Unit)

Preliminary Testing and Troubleshooting

This section provides a functional preliminary test for the mobile radio once installed. It is used to determine the condition of new mobile radios before being placed into service. If the mobile radio is found to be non-functional after completing this test and the related trobuleshooting scenarios, refer to Chapter 6: Customer Support for appropriate action.

✎ This section applies to all mobile radio frequency ranges.

Checklist of Required Material

Table 11 provides a checklist of the tools and equipment required to perform the preliminary test procedure:

TABLE 11: CHECKLIST OF REQUIRED MATERIAL TO PERFORM PRELIMINARY TESTING

NO.	REQUIRED TOOLS/EQUIPMENT	☑
1	IPM mobile radio installed in the vehicle as previously described in this chapter.	☐
2	A laptop with an available serial communication port and Microsoft Windows 98 or greater installed.	☐
3	*IP*MobileNet Dial-Up Networking and *IP*Message software loaded onto the laptop (IPMN_INVADR.exe).	☐
4	DC power supply with ammeter, 13.8V, 12 amps or more (Astron VS12M or equivalent).	☐
5	Corresponding calibrated IPB base station	☐
6	Internet Protocol Network Controller (IPNC)	☐
7	Two antennas (generic mag mounts) tuned to frequency of transceiver.	☐
8	Serial cable DB9M – DB9F connectors (IPMN p/n: 156-0245-020).	☐
9	RF Attenuator 10-20 dB with appropriate wattage rating for transceiver.	☐

Base Station Setup for Testing

The system must be programmed with the customer's parameters before any tests are made on the mobile radio.

To prepare the base station to be used in the mobile radio test, perform the following steps:

Step 1 On the laptop at the Windows desktop, click on the **Start** button and select **Accessories**, **Communications**, and **HyperTerminal**.

Step 2 Power up the base station.

First-time users must enter the customer's operating parameters into the base station with *HyperTerminal* (*refer to the IPB Base Station System Manual for instructions, and the client's system documentation for parameters*).

Ensure that the calibrated base station and the mobile radio antennas are separated by at least 10 feet. If the antennas are too close, the mobile radio receivers may overload by the transmitters resulting in intermittent communications and high data errors.

Preliminary Test Procedure and Troubleshooting

✎ Prior to performing this procedure, the IP address of the IPNC must be obtained. Note taking during preliminary testing is crucial to ensure necessary information is gathered to use for additional testing or if the mobile radio needs to be submitted for repair.

To test mobile radio functionality, perform the following steps:

Step 1 Perform a visual inspection of the mobile radio and its connections. Validate that all connectors and power cables are in good condition and all chassis screws are in place.

Step 2 Connect the mobile radio as shown below in Figure 21.

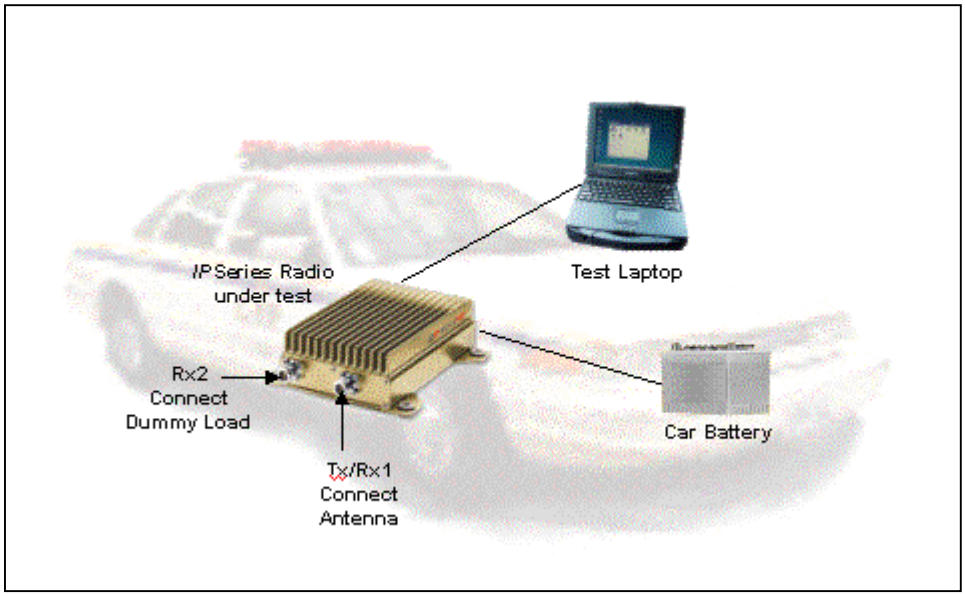

Figure 21: Mobile Radio Connection for Testing

Step 3 Power on the mobile radio and the test laptop. The power supply ammeter must read 1.0 amp or less with a 13.8 VDC output.

Step 4 At the desktop, run the dial-up connection setup to use Serial Line Internet Protocol (SLIP) by double clicking on the **IPMN_INVADR** shortcut.

✎ The IPMN_INVADR dial-up network shortcut displays as an icon on the laptop's desktop. If the IPMN_INVADR shortcut is not available on the desktop, consult the *Mobile Data Computer for Communication with the Mobile Radio Installation Guide* (IPMN p/n: 516-80310) for instructions on how to set up the connection.

Step 5 At the desktop, run the *IP*Message Utility by double clicking on the ***IP*Msg** shortcut. The *IP*Message window displays.

If a message window appears indicating the connection was unsuccessful, perform the following troubleshooting steps:

1. *Ensure the serial and power cables are properly connected.*
2. *Verify that the mobile radio lock LED (light emitting diode) is on, indicating the mobile radio has power (see Figure 2).*
3. *Ensure that the IPMN_INVADR dial-up connection is running.*
4. *If problem persists after retrying, replace the serial cable with one that is known to be working properly.*

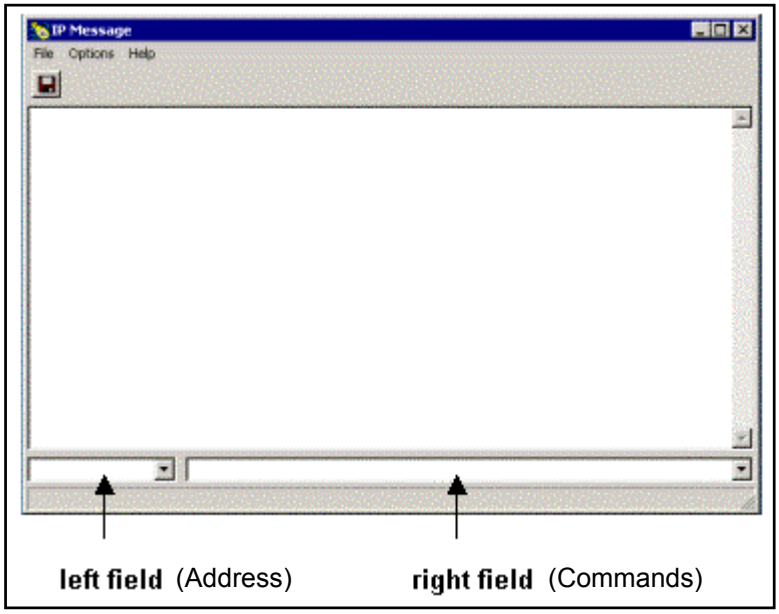

Figure 22: *IP*Message Window

Step 6 In the *IP*Message window in the left field, enter the mobile radio's IP address and press the **TAB** button. If the mobile IP address is not known, enter 255.255.255.255 in the left field.

Step 7 In the right field type a **?** and click the **ENTER** button. A list of mobile radio configuration parameters appears in the upper message window. This verifies that the IP address is correct, the mobile radio's serial interface is live, and that the mobile radio's microcontroller section is active.

*If the upper message window only displays **"To [IP address] ?"**, communication has not been established. Validate the IP address.*

Step 8 At the desktop, click on the **Start** button and select **Programs** and **MS-DOS Prompt**. The MS-DOS window displays.

Step 9 Ping the IPNC commanding the transmitter to send 25 messages of 500 characters each to the IPNC as well as a response through Receiver 1 back to the laptop or desktop PC by typing in the following command at the MS-DOS prompt replacing NNN.NNN.NNN.NNN with the IPNC IP address:

```
Ping NNN.NNN.NNN.NNN –n 25 –l 500 –w 4000
```

After entering the command, press **[ENTER]** to continue.

When entering a command, pay special attention to the spaces and the characters being typed.

If the calibrated base station does not respond, check the syntax of the Ping command and verify the IP address is correct.

If the ping command runs but high packet loss figures are shown, perform the following:

1. *Verify that the calibrated base station and mobile radio antennas are separated by at least 10 feet. If the antennas are too close, the mobile radio receivers overload by the transmitters resulting in intermittent communication and high data errors.*
2. *Verify the calibrated base station parameters are correct for the mobile radio. Such parameters include IP addresses and complementary RX/TX frequencies.*
3. *Check to ensure the data and power cables are connected correctly.*
4. *If the Ping command continues to fail, test using a mobile radio that is known to be working properly.*

Step 10 Check the test laptop and verify that the Packets Lost Percentage is zero to 1% packet loss. Greater losses may indicate a problem with the transmitter/receiver 1, or modem circuitry.

Step 11 Change the antenna on the mobile radio to the RX2 antenna input.

Step 12 Connect the RF attenuator to the mobile radio's TX/RX1 antenna input.

Step 13 Connect the second antenna to the RF attenuator. In the *IP*Message window, enter **receiver=2**. This will allow the mobile radio to only receive via Receiver 2.

Step 14 Type the following command at the MS-DOS prompt replacing NNN.NNN.NNN.NNN with the IPNC IP address:

```
Ping NNN.NNN.NNN.NNN –n 25 –l 500 –w 4000
```

After entering the command, press **[ENTER]** to continue**.**

Step 15 Check the test laptop and verify that the Packets Lost Percentage is zero to 1% packet loss. Greater losses may indicate a problem with the transmitter/receiver 1, or modem circuitry.

Enabling Ethernet for Static IP Address Update in the Mobile Radio

The following provides instruction on how to enable the Ethernet port on the mobile radio.

Requirements

This process is performed using Windows 98, 2000, or XP.

✎ The default is the Ethernet port. If Ethernet is original connection it will remain connected there. If disconnected, the connection will default back to the SLIP port connection. If the SLIP port is connected and programming is attempted, it immediately switches to the Ethernet connection.

Enabling the Ethernet Port

To enable the Ethernet port, perform the following steps:

Step 1 Press the right mouse button on the **Network Neighborhood** icon and select **Properties**.

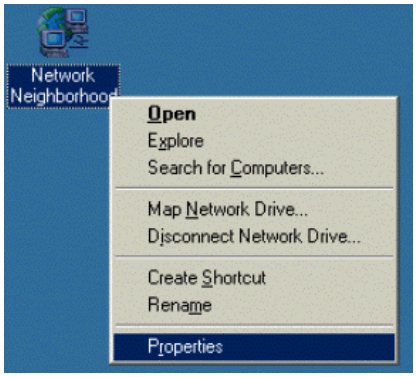

Figure 23: Properties Selection

Step 2 Select **TCP/IP → Ethernet Controller** click on the Properties button and at the TCP/IP Properties window click on the IP Address tab.

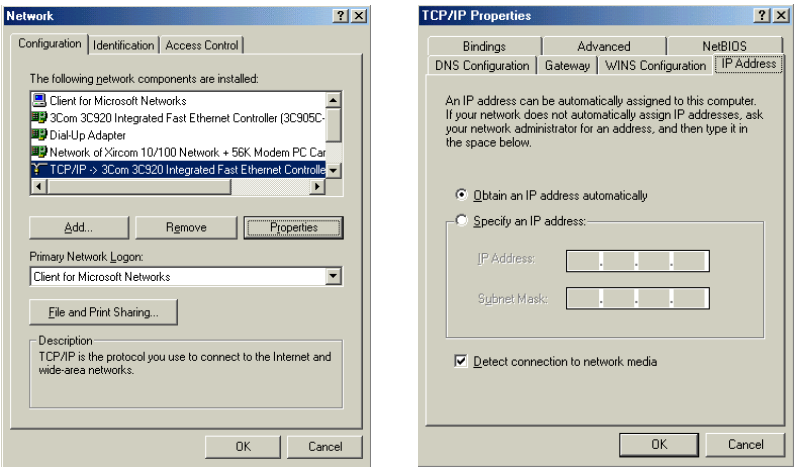

Figure 24: TCP/IP and Ethernet Controller Properties

Step 3 Select 'Specify an IP Address' and enter the IP address as needed and the Subnet Mask as needed.

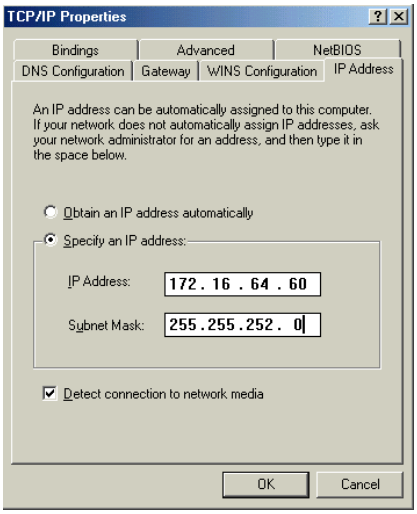

Figure 25: TCP/IP Properties

Step 4 Select the **Gateway** tab and enter the gateway (the radio's) IP address and click on **ADD**.

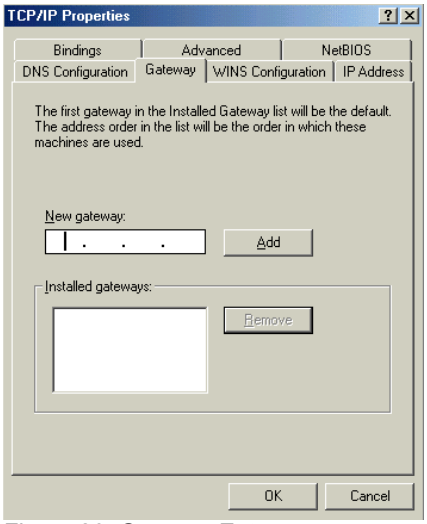

Figure 26: Gateway Entry

Step 5 Click on **OK**, then on **OK** again.

Step 6 For Windows 98, set Windows to find the CAB and System files, which can typically be accessed via the following path:

C:\WINDOWS\OPTIONS\CABS; C:\WINDOWS\SYSTEM32

Step 7 Set Windows not to install older files.

Step 8 Reboot.

Viewing the Mobile Radio's Configuration Data

To view the mobile radio's parameters, perform the following steps:

Step 1 At the desktop, run the **IPMN_INVADR** by double clicking on the dial-up network connection shortcut.

Step 2 At the desktop, run the *IP*Message Utility by double clicking on the ***IP*Msg** shortcut. The *IP*Message window displays.

Step 3 In the left field type the mobile radio's IP address and press **ENTER**.

Step 4 In the lower message area type a **?** and press **ENTER**. A list of mobile radio configuration parameters appears in the upper message window.

Changing the Mobile Radio's IP Address

To change the mobile radio's IP address, perform the following steps:

Step 1 At the desktop, run the **IPMN_INVADR** by double clicking on the dial-up network connection shortcut, as shown above.

Step 2 At the desktop, run the *IP*Message Utility by double clicking on the ***IP*Msg** shortcut, as shown above. The *IP*Message window displays.

Step 3 In the left field type the mobile radio's IP address and press **ENTER**.

Step 4 In the right field type a **?** and press **ENTER**. A list of mobile radio configuration parameters appears in the upper message window.

Step 5 In the right field type **unlock=password** (entering the appropriate password) and press **ENTER**. This command unlocks the mobile radio's Firmware and grants the user the authority to change the IP address.

✎ The password is case sensitive.

Step 6 In the right field type **ipaddress=NNN.NNN.NNN.NNN** replacing the N's with the mobile radio's new IP address.

✎ A line of text containing the mobile radio's new IP address will appear in the message window. If there is no response, repeat Steps 5 and 6.

Step 7 Write the new IP address on a label and attach the label to the mobile radio.

✎ Communication with the mobile radio will cease due to the IP address change. To resume communication with the mobile radio, type the new IP address in the left field and press **ENTER**.

Changing Mobile Radio Parameters

Perform the following steps to make changes to mobile radio parameters:

Step 1 At the desktop, run the **IPMN_INVADR** by double clicking on the dial-up network connection shortcut, as shown on the previous page.

Step 2 At the desktop, run the *IP*Message Utility by double clicking on the ***IP*Msg** shortcut, as shown on the previous page. The *IP*Message window displays.

Step 3 In the left field type the mobile radio's IP address and press **ENTER**.

Step 4 In the right field type a **?** and press **ENTER**. A list of mobile radio configuration parameters appears in the upper message window.

Step 5 In the lower message window type **unlock=password** (entering the appropriate password) and press **ENTER**. This command unlocks the mobile radio's Firmware and grants the user authority to change mobile radio parameters.

⚠ **WARNING!** Do not change mobile radio parameters unless familiar with this process. Changing a parameter to the wrong value may seriously affect the mobile radio's performance. Parameter changes should be limited to the IP address, power output, channel number, and RX/TX frequencies.

Step 6 Enter appropriate commands in the lower window with parameter changes (see examples to follow).

✎ In the following examples, the frequencies are representative of the IPM4. Replace with the appropriate frequencies if dealing with an IPM1 or IPM8

EXAMPLE 1 SCENARIO

The transmit power output is too high. The client was authorized 25 Watts. The mobile radio configuration list shows TX Power=200 (this does not mean 200 W).

Parameter Change Command: In the lower message window, type the following command, then press **ENTER**.
`TX POWER=150` Send test messages, measure the RF power output, and reenter the command with increased or decreased values until 25 watts is achieved. The mobile radio is designed for full power use. Please consult IPMN Customer service if your needs are going to be at a lower power output. TX power is not guaranteed to produce any user selectable power level.

EXAMPLE 2 SCENARIO

The mobile radio was set for the wrong RX frequency. The client was assigned 471.5500 (RX), and 474.5500 (TX). The mobile radio configuration list shows TX Freq=474.5500, and RX Freq=471.0000.

Parameter Change Command: In the lower message window, type the following command, then press **ENTER**.
`FREQUENCY=0,474.550000,471.550000` **NOTE:** This programs channel 0. The trailing zeros (0) are not required.

EXAMPLE 3 SCENARIO

The mobile radio was set for the wrong RX and TX frequencies. The client was assigned 471.6500 (RX), and 474.6500 (TX). The mobile radio configuration list shows TX Freq=474.5500, and RX Freq=471.5500.

NOTE: This programs channel 0.

Parameter Change Command: In the lower message window, type the following command, then press **ENTER**.
`FREQUENCY=0,474.650000,471.650000`

EXAMPLE 4 SCENARIO

Add another channel. The client was assigned a second channel of 474.6500 (RX) and 477.6500 (TX). The mobile radio configuration list shows Channel=0, TX Freq=474.6500, RX Freq=471.6500. There is no second channel.

Parameter Change Command: In the lower message window, type the following command, then press **ENTER**.
`FREQUENCY=1,477.650000,474.650000`

Notes on frequency changes:

- The syntax is FREQUENCY=CHANNEL NO.,TX FREQ,RX FREQ
- The channel number and both frequencies must be entered even if only changing one frequency.
- If new RX/TX frequencies are greatly different, the mobile radio may operate outside the bandpass of the receiver filters and power amplifier module deteriorating performance. The mobile radio must be replaced with one operating in the selected frequency range.
- Additional frequencies that are not active may be detrimental to the mobile radio's performance.

Step 7 If necessary, repeat Steps 5 and 6 to change the parameters.

Step 8 Verify that all parameter changes were accepted by the mobile radio. To do this, type a **?** in the right field and press **ENTER**. Compare the desired parameter changes with those appearing in the upper message window.

Step 9 Disconnect the mobile radio and return it to service.

Factory Default Save and Restore

For instructions on Factory Default Save and Restore Commands, please contact the Customer Service number provided in Chapter 6 of this document.

Ordering Parts

Replacement parts may be ordered from the following address:

Attn: Small Parts Sales
*IP*MobileNet, Inc.
16842 Von Karman Avenue, Suite 200
Irvine, CA 92606

Voice: (949) 417-4590
Fax: (949) 417-4591

Customer Support

To obtain assistance to troubleshoot problems with a product, please contact *IP*MobileNet's Customer Service Staff at (800) 348-1477.

Reporting Problems with the Documentation

To report problems or question concerning the documentation included in your shipment, please send an email to mlopez@ipmobilenetinc.com explaining the problem and the Publications Department will respond as soon as possible.

Please ensure to include the following information with your email message:

- Your company name
- Your name or other contact name
- Return email address
- Manual name
- Manual part number
- Page number(s)
- Description of the problem

Data Field	Description
hostframing=Ethernet	**Sets up Host Interface in Ethernet Mode.** A new parameter, "Ethernet", has been added to the existing "Host Framing" command. Before typing in the command, the radio must be unlocked. The command is effective immediately. When host framing is set to Ethernet, the radio will try to use the Ethernet interface first. If the Ethernet link status is bad, the radio will switch back to the SLIP interface. The radio does not support both SLIP and Ethernet interfaces concurrently. Therefore, if both the serial and Ethernet interfaces are physically connected to the host, it is very important that the SLIP2IPMN dial-up is disabled. The TCP/IP property for the Ethernet interface of the PC must be configured with an IP address different from the SLIP2IPMN's IP address. The default gateway address must be set to be the same as the mobile radio's IP address. If the PC is configured to obtain the IP address dynamically, the mobile radio's DHCP Server feature must be enabled first (see DHCP Server command below). Default Value = Ethernet, nostatus
dhcpclient=enable or dhcpclient=disable	**Enables/Disables DHCP Client.** Use this command to enable or disable DHCP. Before typing in the command, the radio must be unlocked. Once the command has been entered, the radio should be reset with the "reboot" command. When DHCP Client is enabled, upon resetting, the mobile radio will obtain the IP addresses and netmasks of the mobile radio itself, the PC and the VIU over-the-air from the IPNC. The base station where the mobile radio is connected must be configured with "dchprelayagent" enabled. Also, the IPNC DHCP server must be set-up and activated. When DHCP Client is disabled, the mobile radio's IP address and netmask must be configured manually using the "ipaddress" command. Default Value = disable
dhcpserver=enable or dhcpserver=disable	**Enables/Disables the DHCP Server.** Use this command to enable or disable the DHCP server capability of the mobile radio. Before typing in the command, the radio must be unlocked. Once the command has been entered, the radio should be reset with the "reboot" command. When DHCP Server is enabled in the mobile radio, the PC connected to the radio's Ethernet port can be set-up for dynamic IP address configuration. DHCP Server can be enabled/disabled independent of the state of DHCP Client. If DHCP Server is enabled but DHCP Client is not, the radio will generate the IP addresses for the PC and VIU according to rules of the IPNC subnet addressing described in the IPNC Installation Manual. Examples: 1. Mobile Netmask:255.255.255.0, mobile:172.16.22.10, pc:172.16.20.10, viu:172.16.21.10 2. Mobile Netmask:255.255.254.0, mobile:172.16.44.10, pc:172.16.40.10, viu:172.16.42.10 Default Value = disable
suspendtx=n	**Enable/Disable Unlicensed Frequency Restriction.** Where "n" is a decimal number range from 0 to 32767. Use this command to enable or disable the feature of prohibiting transmission on unlicensed frequency channels. Before typing in the command, the radio must be unlocked. The command is effective immediately. When the "suspendtx" parameter is set to zero, the feature is disabled. In this case, the radio is not prohibited to transmit even if it has not received anything from a base station. On the other hand, if the parameter is not zero, the radio will NOT send until it has received from a base station. Once the radio has received from the base, it will begin sending but will stop further transmissions if it has failed to receive from a base station after the period, in seconds, specified in the parameter. When "testmode" is set to 1 in the radio, "suspendtx" should be set to zero. Default Value = 0

Data Field	Description
txdelay=x	**Setting Transmission Delay.** Where "x" is number of slots, from 0 to 15, to be delayed. Use this command to delay back-to-back radio transmissions to reduce the chances of colliding with the base station downlink transmission. Before typing in the command, the radio must be unlocked. The command is effective immediately. When setting the delay to a non-zero value, the "rxinprogressmessage" in the base must be set to 1. Default Value = 2
mtu=n	**Setting MTU.** Where "n" is the desired MTU in decimal value, 1500 maximum. Use this command to change the MTU. Before typing in the command, the radio must be unlocked. The command is effective immediately. When the radio receives a packet with size greater than the MTU, it will return an ICMP packet (type=3, code=4) to the source. The original received packet will be discarded. Default Value = 1500
internalgpsinput=1 (input protocol = TSIP) internalgpsoutput=1 (output protocol = TSIP) internalgpsinput=2 (input protocol = TAIP) internalgpsoutput=2 (output protocol = TAIP) internalgpsoutput=3 (output protocol = NMEA)	**Setting Internal GPS Input/Output Default Protocol.** Use this command to configure the default protocol for the internal GPS. Before typing in the command, the radio must be unlocked. Once the command has been entered, the radio should be reset with the "reboot" command. Default Value = internalgpsinput=2, internalgpsoutput=2
tftpoptions=s,t	**Setting TFTP Packet Size and Delay between Packets.** Where "s" is the packet size in number of bytes (e.g. 512), and "t" is the delay between packet transfers in seconds (e.g. 3). Use this command to change the default over-the-air TFTP protocol options (256 bytes for packet size and 3 seconds for packet delays). These options do not apply to TFTP packets that are not sent over-the-air, which are fixed at 512 bytes and no delay. Before typing in the command, the radio must be unlocked. The command is effective on the next file transfer. Default Value = 256, 3
diversityprocessor=0	**Disable Diversity Processor.** Use this command to disable the diversity processor. The mobile Firmware automatically detects whether the diversity processor is present and enables it if it is detected. When the diversity processor is enabled, the diversity processor will handle diversity. If the diversity processor is present but is disabled with the command by the user, the main processor will handle diversity. Before typing in the command, the radio must be unlocked. The command is effective immediately. To re-enable the diversity processor, the user must reboot the radio using the 'reboot' command. Default Value = 1 if found, 0 if not found (auto-detect)

Data Field	Description
updatefirmware=filename	**Update Mobile Radio Firmware/EEPROM.** Where "filename" is the file name of the Firmware or EEPROM binary file. Use this command to update the radio Firmware or EEPROM content. The filename cannot contain the path. The file must reside in the current file path of IPMSG. Before typing in the command, the radio must be unlocked. When update is finished, the firmware will reboot the radio automatically. Alternatively, the Firmware/EEPROM can be updated using the "File | Update Firmware" pull-down menu in IPMSG. This is the preferred method, since the path (drive and directory) can be specified. Default Value = none

FIGURE LISTING

No.	Description	Page No.
1	*IP*Series Mobile Radio (Front View)	7
2	*IP*Series Mobile Radio (External Features)	8
3	General Block Diagram	10
4	Basic Network Connection	12
5	Network Connection to an Existing LAN	13
6	Wireless high Speed Digital IP Voice & Data (over the Internet)	14
7	Mobile Radio-to-Mobile Computer Setup	15
8	Mobile Radio-to-VIU-to-Mobile Computer Setup	16
9	Trunk Compartment Installation	20
10	Mobile Radio Mounting	21
11	DB9M Serial Male Connector	22
12	DB9F Serial Female Connector	22
13	Delay Timer Installation	23
14	Carling Switch Installation	24
15	Power Supply Installation	
16	Antenna Distance Configuration	27
17	VIU Connections	29
18	Vehicle Unit Wiring Interconnection Layout	31
19	Diversity Antenna Mobile Installation Detail (Typical Installation)	32
20	Vehicle Unit Wiring Interconnection Layout (with VIU)	32
21	Mobile Radio Connection for Testing	35
22	*IP*Message Window	36
23	Properties Selection	38
24	TCP/IP and Ethernet Controller Properties	38
25	TCP/IP Properties	39
26	Gateway Entry	39

4-Level FSK — A form of digital modulation in which four (4) discrete levels of carrier frequency displacement are employed to convey information.

Analog — A classification of signal in which the amplitude of the signal may take on an infinite number of values.

Bessel Filter — A filter with a linear phase response.

Broadband — A term, which implies that the equipment can be operated over a wide (broad) band of frequencies.

bps — bits per second

CMOS — Complementary Metal Oxide Semiconductor – A type of integrated circuit with low power consumption.

Collision Tolerant Modem — A specially designed modem, which can tolerate transmissions that overlap in time.

Continuous Duty — Indicates that the equipment can be operated 100% of the time.

CRC — Cyclic Redundancy Checksum – An error detection scheme in which a known algorithm is used to operate on a message both prior to transmission and after reception. The output of the operation (the checksum) is compared on both sides of the link to validate the integrity of the received message.

Data Interleaving — A technique in which the order of the individual data bits within the data to be transmitted is shifted and interleaved so as to disassociate adjacent data bits in a message. This scheme is complementary to forward error correction (FEC) algorithms.

Data Scrambling — A technique used to ensure no repeating patterns exist in the transmitted data stream, a method of ensuring the data is reasonable random in nature.

Digital — A classification of signal in which the amplitude of the signal may take a discrete number of values.

Diversity Reception — A reception system using multiple antennas and/or multiple receivers to combat multi-path fading.

Dynamic Range — The range of amplitudes over which a receiver or amplifier will operate within specifications.

EIA Electronic Industries Association

EMI Electromagnetic Interference

Ethernet A local area network (LAN) architecture, which uses a bus or star topology and supports data transfer rates of 10 Mbps.

Exciter An exciter is that part of a radio, which creates the transmit RF carrier and performs the process of modulation.

FEC Forward Error Correction – A methodology used to correct errors, which may occur in wireless transmission systems. With FEC, additional data is added to each message prior to transmission, at the receiving end, this additional information can be used to correct errors in the received message.

FM Frequency Modulation – A form of modulation where the carrier is shifted an amount proportional to the modulating signal's amplitude at a rate proportional to the modulating signal's frequency.

Frequency Stability A measure of the stability of a frequency with respect to temperature, usually expressed in ppm (parts per million) over a specified temperature range.

FSK Frequency Shift Keying – Digital modulation (a form of FM) where the carrier frequency is shifted above and below the operating frequency (in discreet steps) in response to a digital data input.

Full Duplex A dual frequency mode of operation in which transmission and reception occur simultaneously.

GFSK Gaussian Filtered Frequency Shift Keying – A form of digital modulation in which the baseband modulation signal is filtered by a low-pass filter with a Guassian response prior to modulating the carrier signal.

GPS Global Positioning System

Image Frequency An unwanted frequency, which will produce an on-frequency IF (Intermediate Frequency) signal.

Injection An injection signal is a signal used in frequency conversion circuits, it is normally mixed with another signal to produce a third signal (which is a sum or difference or the original signal and the injection signal).

Half Duplex A dual frequency mode of operation, which inhibits simultaneous transmission and reception.

LO Local Oscillator – An on-board oscillator used in frequency conversion circuits.

Modular Design A design in which the major functional components are separated into distinct modules.

Multipath A radio propagation situation in which multiple RF (radio frequency) signals paths exists between a transmitter and receiver. These multiple paths or multi-path situations can create significant distortion in the received signal.

NFEZ Near-Field Exclusion Zone

Noise Figure The "Figure of Merit" of an amplifier. Specifically, noise figure is a measure of the degradation in SNR (signal-to-noise ratio) between the input and output ports of a network.

PCB Printed Circuit Board

Phase Linearity Implies a linear relationship between the phase of a signal and the frequency of that signal. A linear phase response ensures constant input to output delays regardless of frequency, import for wireless communication systems.

Phase Noise A measure of the purity of a discreet frequency (expressed in –dBc/Hz at some offset frequency).

PLL Phase Locked Loop - A circuit configuration used to lock the frequency of a VCO (voltage controlled oscillator) to a high stability reference oscillator.

ppm Parts Per Million

RF Radio Frequency

RFI Radio Frequency Interference

SINAD The ratio of Signal + Noise + Distortion to Noise + Distortion.

Sensitivity The measure of a receiver's ability to capture and faithfully reproduce weak signals.

SMT	Surface Mount Technology – electronic components, which make electrical contact on the surface layer of a PCB (as opposed to thru-hole components). SMT devices provide reduced size and increase performance.
SNR	Signal-to-Noise Ratio
TCVCXO	Temperature Compensated Volated Controlled Crystal Oscillator
TIA	Telecommunications Industry Association
Transmit Attack Time	The elapsed time from transmit key assertion to 90% rated RF power is achieved.
VCO	Voltage Controlled Oscillator – An oscillator whose frequency can be adjusted by a DC control voltage.

A

antenna · 7, 8, 9, 11, 19, 20, 26, 27, 28, 31, 37

C

Carling Switch · 3, 22, 24, 48

D

Delay Timer · 25, 26, 48
Diversity · 3, 7, 32, 46, 48, 49

E

EMI Filter · 3, 18, 22, 23, 48
Ethernet · 4, 7, 8, 9, 10, 38, 45, 50

F

Features · 3, 8, 48

G

GPS · 7, 9, 11, 46, 50

I

*IP*Message · 4, 5, 33, 35, 36, 40, 41
IPMN_INVADR · 15, 16, 33, 35, 36, 40, 41

M

mobile radio · 5, 7, 8, 10, 11, 15, 16, 17, 18, 20, 21, 22, 23, 27, 28, 30, 31, 33, 34, 35, 36, 37, 38, 40, 41, 42, 45

P

Parameters · 4, 5, 41
Programming · 4

R

receiver · 7, 9, 10, 11, 27, 37, 42, 49, 51

S

Serial Cable · 3, 19, 22
Specifications · 3, 9

T

Testing · 3, 33, 34, 35, 36, 48
trunk · 20, 21, 22, 25, 26, 27, 29

V

Vehicle Unit Wiring · 3, 31, 32, 48
VIU · 3, 13, 15, 16, 18, 28, 29, 45, 48