Enfora Enabler II-G Assisted GPS Integration Guide

Version 0.1

Enfora L.P.
661 E. 18th Street Plano Texas 75074
www.enfora.com

Document Title:	Enfora Enabler II-G Assisted GPS Integration Guide
Version:	0.1
Date:	03/31/06
Status:	PRELIMINARY
Document Control ID:	MLG0208PB001

PRELIMINARY

General

All efforts have been made to ensure the accuracy of material provided in this document at the time of release. However, the items described in this document are subject to continuous development and improvement. All specifications are subject to change without notice and do not represent a commitment on the part of Enfora L.P. Enfora L.P. will not be responsible for any loss or damages incurred related to the use of information contained in this document.

This product is not intended for use in life support appliances, devices or systems where a malfunction of the product can reasonably be expected to result in personal injury. Enfora L.P. customers using, integrating, and/or selling this product for use in such applications do so at their own risk and agree to fully indemnify Enfora L.P. for any damages resulting from illegal use or resale.

Copyright

Complying with all applicable copyright laws is the responsibility of the user. Without limiting the rights under copyright, no part of this document may be reproduced, stored in or introduced into a retrieval system, or transmitted in any form or by any means (electronic, mechanical, photocopying, recording or otherwise), or for any purpose, without the express written permission of Enfora L.P.

Enfora may have patents, patent applications, trademarks, copyrights or other intellectual property rights covering subject matter in this document. Except as expressly provided in any written license agreement from Enfora, the furnishing of this document does not give you any license to these patents, trademarks, copyrights or other intellectual property.

©2002, 2003, 2004, 2005 Enfora L.P. All rights reserved.

Enabler and Spider are either registered trademarks or trademarks of Enfora L.P. in the United States.

1.0 Safety Precautions 4
1.1 Important Safety Information 4
2.0 Regulatory Compliance FCC 4
2.1 Integration Considerations and Installation Requirements 4
2.2 Disclaimer 7
3.0 Manual Overview 8
3.1 Revision History 8
3.2 Reference Documents 9
4.0 Introduction 11
4.1 Product Overview 11
4.2 Key Features of the Assisted GPS Module 11
4.3 Providing Multi-Band Operation 12
4.4 Wireless Data Application Possibilities 12
4.5 GSM/GPRS System Overview 13
Assisted GPS System Overview 14
4.6 Summary of Features for the Enabler II-G A-GPS Module 16
5.0 Technical Specifications 19
5.1 Enabler II-G A-GPS Module Block Diagram 19
5.2 Detailed Product Specifications 21
5.3 Operating Power 23
6.0 Physical Interfaces 25
6.1 Physical Layout 26
6.2 Enabler II-G A-GPS Module Mounting Reference 29
6.3 Module Pin Orientation Reference 30
6.3 Connectors 30
6.4 Circuit Protection 32
Circuit Protection ..... **Error! Bookmark not defined.**
6.5 Control Connector Signal Descriptions and Functions 34
6.6 Subscriber Identity Module (SIM) Carrier 49
7.0 GSM/GPRS Modes of Operation 51
7.1 Enabling the Transmission Modes for the GSM/GPRS Services 51
7.2 Voice Communication 51
7.3 Circuit-Switched Data 51
7.4 SMS: Short Message Services 52
8.0 GPS Modes of Operation 53
8.1 Autonomous 53
8.2 Mobile Assisted 53
8.3 Enhanced Autonomous 53
9.0 SIM Operation 55
9.1 Provisioning the SIM 55
9.2 GSM Services Supported by the Enfora Enabler II-G A-GPS Module 55
9.3 GPRS Services Supported by the Enfora Enabler II-G A-GPS Module 55
9.4 Selecting the GSM Modes of Operation 55
10.0 Software Interface 56
10.1 Software Interface 56
10.2 Format for the AT Commands 57
10.3 Enfora AT Command Set 58
10.4 Enfora Packet Application Programming Interface 58
10.5 Enfora Modem Control Library Architecture 60
11.0 Setup and Initialization 63
11.1 General Setup 63
11.2 GSM/SMS Examples 68
11.3 GPRS Packet Examples 68
11.4 GPS Examples 68
12.0 Integration and Testing 70

PRELIMINARY

12.1 Integrating the Enfora Enabler II-G A-GPS Module 70
13.0 APPENDIX A - Warranty Repair and Return Policy 73
14.0 APPENDIX B - Regulations and Compliance 75
14.1 GCF Approval (Formerly FTA) 75
14.2 Electromagnetic Compatibility (EMC) and Safety Requirements 75
14.3 EMC/Safety Requirements for the USA 75
14.4 Human Exposure Compliance Statement 76
14.5 Compliance with FCC Regulations 76
14.6 Unintentional Radiators, Part 15 77
14.7 Intentional Radiators, Part 24 77
14.8 Instructions to the Original Equipment Manufacturer (OEM) 78
14.9 Nationally Recognized Testing Laboratory (NRTL) Approval 82
14.10 EMC/Safety Requirements for the Countries of the European Union (EU) 83
14.11 EMC/Safety Requirements for Other Countries 83
15.0 APPENDIX C - Glossary and Acronyms 84
16.0 APPENDIX D – Tables and Figures 86
17.0 APPENDIX E - Contacting Enfora 89

PRELIMINARY

1.0 Safety Precautions

1.1 Important Safety Information

The following information applies to the devices described in this manual. Always observe all standard and accepted safety precautions and guidelines when handling any electrical device.

- Save this manual: it contains important safety information and operating instructions.
- Do not expose the Enfora Enabler II-G A-GPS product to open flames.
- Ensure that liquids do not spill into the devices.
- Do not attempt to disassemble the product: Doing so will void the warranty. With the exception of the Subscriber Identification Module (SIM), this product does not contain consumer-serviceable components.

2.0 Regulatory Compliance FCC

2.1 Integration Considerations and Installation Requirements

The Enabler II-G A-GPS modem is designed for use in a variety of host units, "enabling" the host platform to perform wireless data communications and GPS location. However, there are certain criteria relative to integrating the modem into a host platform such as a PC, laptop, handheld or PocketPC®, monitor and control unit, etc. that must be considered to ensure continued compliance with FCC compliance requirements.

- In order to use the Enabler II-G A-GPS modem without additional FCC certification approvals, the installation must meet the following conditions:
  - For the transmitter to meet the MPE categorical exclusion requirements of 2.1091, the ERP must be less than 1.5 watts for personnel separation distance of at least 20 cm (7.9 in). Therefore, the maximum antenna gain cannot exceed +3.3dBi. If greater than 1.5 watts exists, then additional testing and FCC approval is required.
  - If used in a "portable" application such as a handheld device with the antenna less than 20 cm (7.9 in.) from the human body when the device is operating, then the integrator is responsible for passing additional "as installed" testing:
    - SAR (Specific Absorption Rate) testing, with results submitted to the FCC for approval prior to selling the integrated unit. If unable to meet SAR requirements, then the host unit must be restricted to "mobile" use (see below).
    - Unintentional emissions, FCC Part 15; results do not have to be submitted to the FCC unless requested, although the test provides substantiation for required labeling (see below).

PRELIMINARY

- If used in a "mobile" application where the antenna is normally separated at least 20 cm (7.9 in) from the human body during device operation, then an appropriate warning label must be placed on the host unit adjacent to the antenna. The label should contain a statement such as the following:

WARNING
RF exposure. Keep at least 20 cm (7.9 in) separation distance from the antenna and the human body.

- Host unit user manuals and other documentation must also include appropriate caution and warning statements and information.

- If the FCCID for the modem is not visible when installed in the host platform, then a permanently attached or marked label must be displayed on the host unit referring to the enclosed modem.

For example, the label should contain wording such as:

Contains GSM/GPRS modem transmitter module
FCC ID: MIVMLG0208
This device complies with Part 15 of the FCC Rules. Operation is subject to the following two conditions: (1) This device may not cause harmful interference, and (2) This device must accept any interference received, including interference that may cause undesired operation.

OR

Contains FCC ID: MIVMLG0208
This device complies with Part 15 of the FCC Rules. Operation is subject to the following two conditions: (1) This device may not cause harmful interference, and (2) This device must accept any interference received, including interference that may cause undesired operation.

- Any antenna used with the modem must be approved by the FCC or as a Class II Permissive Change (including MPEL or SAR data as applicable). The "professional installation" provision of FCC Part 15.203 does not apply.

- The transmitter and antenna must not be co-located or operating in conjunction with any other antenna or transmitter. Violation of this would allow a user to plug another transmitter in to the product and potentially create an RF exposure condition.

WARNING
The transmitter and antenna must not be collocated

PRELIMINARY

or operating in conjunction with any other antenna or transmitter. Failure to observe this warning could produce an RF exposure condition.

PRELIMINARY

2.2 Disclaimer

The information and instructions contained within this publication comply with all FCC, GCF, PTCRB, RTTE, IMEI and other applicable codes that are in effect at the time of publication. Enfora disclaims all responsibility for any act or omissions, or for breach of law, code or regulation, including local or state codes, performed by a third party.

Enfora strongly recommends that all installations, hookups, transmissions, etc., be performed by persons who are experienced in the fields of radio frequency technologies. Enfora acknowledges that the installation, setup and transmission guidelines contained within this publication are guidelines, and that each installation may have variables outside of the guidelines contained herein. Said variables must be taken into consideration when installing or using the product, and Enfora shall not be responsible for installations or transmissions that fall outside of the parameters set forth in this publication.

Enfora shall not be liable for consequential or incidental damages, injury to any person or property, anticipated or lost profits, loss of time, or other losses incurred by Customer or any third party in connection with the installation of the Products or Customer's failure to comply with the information and instructions contained herein.

The Enabler II-G A-GPS platform is designed with features to support a robust connection. There are instances where the module performance is beyond the control of the intended design. Integrated designs that require 24 by 7 operation must implement power control via an external circuit or by implementing power management as specified within this design guide.

PRELIMINARY

3.0 Manual Overview

This document describes the hardware interface of the Enabler II-G Assisted GPS (A-GPS) modem. The purpose of this document is to define the electrical, mechanical and software interfaces while providing detailed technical information in order to streamline the process of hardware and system integration.

3.1 Revision History

Date	Rev	Author	Description
10/12/05	1.00	Matt Glover	Initial Release
01/26/06	1.01	Eric King	FCC ID added, Updated Mechanical drawings, update Block Diagram to include GPS chipset, updated serial UART architecture for GPS support, and added new GPS spec for module.

PRELIMINARY

3.2 Reference Documents

3.2.1 Enfora Enabler II-G Product Documentation

Overview
- GSM2000PB001MAN - Enfora Integrated GPS Module Overview

Manuals
- GSM0102PB001MAN - Enfora GSM/GPRS OEM Module AT Command Set Reference
- GSM0102PB002MAN - Enfora GSM-GPRS Family UDP-API Reference
- GSM0000PB006MAN - Enfora GSM-GPRS Family Modem Control Library Reference
- GSM2000PB001MAN - Enfora GSM-GPRS-Assisted GPS AT Command Set

Application Notes
- GSM0000AN001 - Enabler-G PPP Configuration for Windows 98
- GSM0000AN002 - Enabler-G PPP Configuration for Windows 2000
- GSM0000AN003 - Enabler-G Data Circuit Switched Call Configuration and Use
- GSM0000AN004 - Enabler-G SMS Configuration and Use
- GSM0000AN005 - Enabler-G Automated Network Connection Configuration and Use
- GSM0000AN006 - Enabler-G Module Status Query
- GSM0000AN007 - Enabler-G Status Reporting
- GSM0000AN008 - Enabler-G PPP Configuration for Windows XP
- GSM0000AN009 - Dynamic IP Assignment Support
- GSM0000AN010 - Enabler-G PPP Configuration for PocketPC 2002
- GSM0000AN011 - PAD Configuration and Use
- GSM0000AN012 - Network Transparency Configuration for PAD
- GSM0000AN013 - Enabler-G Sleep Mode Configuration and Use
- GSM0000AN014 - Anytime PPP API Access
- GSM0000AN015 - Event Monitor and Reporting Overview
- GSM0000AN016 - How to Send SMS Messages to an E-Mail Address
- GSM0000AN017 - SMTP Mail Access via TCP PAD
- GSM0000AN018 - USNO NTP Network Time Service TCP PAD

Technical Notes
- GSM0000TN001 - Enabler-G Firmware Upgrade
- GSM0000TN002 - Enabler-G PPP Negotiation Sequence
- GSM0000TN006 - UDP Wakeup Message Header Decoding
- GSM0000TN007 - Enabler-G 3-Wire Serial Interface Requirements
- GSM0000TN008 - Enabler Power Supply Requirements
- GSM0000TN009 - Server Application Design Considerations for Dynamic IP

White Papers
- GSM0000WP001 - Enabler-G Differentiation Features
- GSM0000WP002 - Using Enfora UDP API Versus CMUX Protocol

3.2.2 GSM and PCS Device Specifications
- GSM 11.10-1 (GSM 850, 900, and 1800 MHz devices)
- PCS 11.10 (PCS 1900 MHz devices)

PRELIMINARY

3.2.3 US Government

3.2.4 Federal Communications Commission (FCC)

Internet: **http://www.fcc.gov/**

- FCC Rules, Part 24
  - 47 CFR Subpart E--Broadband PCS
  - 47 CFR § 24.52, sections 1.1307(b), 2.1091, and 2.1093
- FCC Rules, Part 22 for GSM 850
- FCC Rules, Part 15
- FCC Rules, Part 2
  - Subpart J--Equipment Authorization Procedures
  - Section 2.925

3.2.5 FCC Office of Engineering and Technology (OET)

Internet: **http://www.fcc.gov.oet/**

- Bulletin Number 65 "Evaluating Compliance with FCC Guidelines for Human Exposure to Radio Frequency Electromagnetic Fields"
- Supplement C "Additional Information for Evaluating Compliance of Mobile and Portable Devices with FCC Limits for Exposure to Radio Frequency Emissions"

3.2.6 Environmental Regulations

- National Environmental Policy Act (NEPA) of 1969 (Part 1, Subpart 1)

3.2.7 Mechanical Specifications

- ASTM D999
- ASTM D775
- IEC 68-2-27
- Bellcore Gr-63-CORE
- ETS 300 019-1-1 Class 1.2
- ETS 300 019-1-2 Class 2.1
- ETS 300 019-1-3 Class 3.1

3.2.8 RF and EMI Specifications

- ETSI Standards
- EN 61000-4-6
- EN 61000-4-3
- GSM 11.10, Section 12.2
- EN 55022 Class B

PRELIMINARY

4.0 Introduction

4.1 Product Overview

Enfora Enabler II-G A-GPS modem is a compact, wireless OEM module that utilizes the Global System for Mobile Communications (GSM) and GPRS (General Packet Radio Services) international communications standard to provide two-way wireless capabilities via GSM services. The modem also includes an integrated GPS receiver that can provide Assisted GPS functionality for enhanced GPS location performance. The Enfora Enabler II-G A-GPS module is a fully Type-approved GSM/GPRS device, enabling application-specific, two-way communication and control along with GPS location capability. The Enfora Enabler II-G A-GPS module is available in both triple and quad band versions.

The small size of the Enfora Enabler II-G A-GPS module allows it to be integrated easily into the application and packaging.

4.2 Key Features of the Assisted GPS Module

The following table summarizes the main features of the Enfora Enabler II-G Radio Module.

Interface	Data input/output interface	60 position
	Primary serial port	V.24 protocol, 3V levels
	Secondary serial port	V.24 protocol, 3V levels
	Voice	Supports three vocoder modes: full-rate (FR), and enhanced full-rate (EFR), and half-rate (HR)
	Antenna Interface	ultra Miniature Coaxial Interconnect
	Command protocol	Enfora Packet API, GSM AT command set
	Subscriber Identification Module (SIM)	Optional 3 V mini-SIM carrier and interface on board
	Optional remote SIM	Accessible via the 60-pin connector
Power	Electrical power	3.3 to 4.5 Vdc
	Peak currents and average power dissipation	Refer to the Operating Power table in the Technical Specifications for peak currents and average power dissipation for various modes of operation.
Radio Features	Frequency bands	EGSM 900, DCS 1800, and PCS 1900 capability. Quad band version adds GSM 850 capability.
	GSM/GPRS features supported	Provides for all GSM/GPRS authentication, encryption, and frequency hopping algorithms. GPRS Coding Schemes CS1-CS4 supported. Multi-Slot Class 10 (4RX/2TX, Max 5 Slots).
Regulatory	Agency approvals	• GCF Type Approval • PTCRB Type Approval • FCC Certification (Part 24) • RTTE • CE (European Community Certification) • IC (Industry Canada) Approval

PRELIMINARY

GSM/GPRS Functionality	• Mobile-originated and mobile-terminated SMS messages: up to 140 bytes or up to 160 GSM 7-bit ASCII characters. • Reception of Cell Broadcast Message • SMS Receipt acknowledgement • Circuit Switched Data (Transparent & Non-transparent up to 9.6 Kbps) • Voice (EFR, FR, HR) • Supports Unstructured Supplementary Service Data (USSD) • Multi-Slot Class 10 Supported (4Rx/2TX), (5 Slot Max) • PBCCH/PCCCH Supported
GPS Functionality	12 Channel GPS receiver Embedded Global Locate Assisted GPS functionality
SIM	3 V Mini-Subscriber Identity Module (SIM) compatible

Table 1 - Enabler II-G Key Features

4.3 Providing Multi-Band Operation

The Enfora Enabler II-G A-GPS module provides multi-band operation, with the operating frequency selectable by AT Command:

- The 1900 MHz Enfora Enabler II-G module is available for integration and deployment for use worldwide, with 1900 MHz support primarily in North America and regions where the 1900 MHz Personal Communication Services (PCS) band is allocated. The GSM0308 Quad-Band module also supports GSM 850 for use in North America.

- The 900/1800 MHz Enfora Enabler II-G modules are available for deployment in Europe and the rest of the world.

4.4 Wireless Data Application Possibilities

A variety of applications can use the Enfora Enabler II-G A-GPS module for transmitting/receiving data/voice and providing integrated GPS location capability, such as:

- Automated Meter Reading (AMR)
- Point of Sale Applications
- E-mail and Internet access
- Automated Vehicle Location (AVL)
- Telematics
- Telemetry
- Wireless Security
- Location-Based Services (LBS)
- Proximity detection

PRELIMINARY

4.5 GSM/GPRS System Overview

The Enfora Enabler G-II module is shown in Figure 1 is designed for easy integration with other components and packaging by leveraging the existing GSM networks. Compare the Enfora Enabler G II to systems that require construction, operation, maintenance, and expense of a private network.

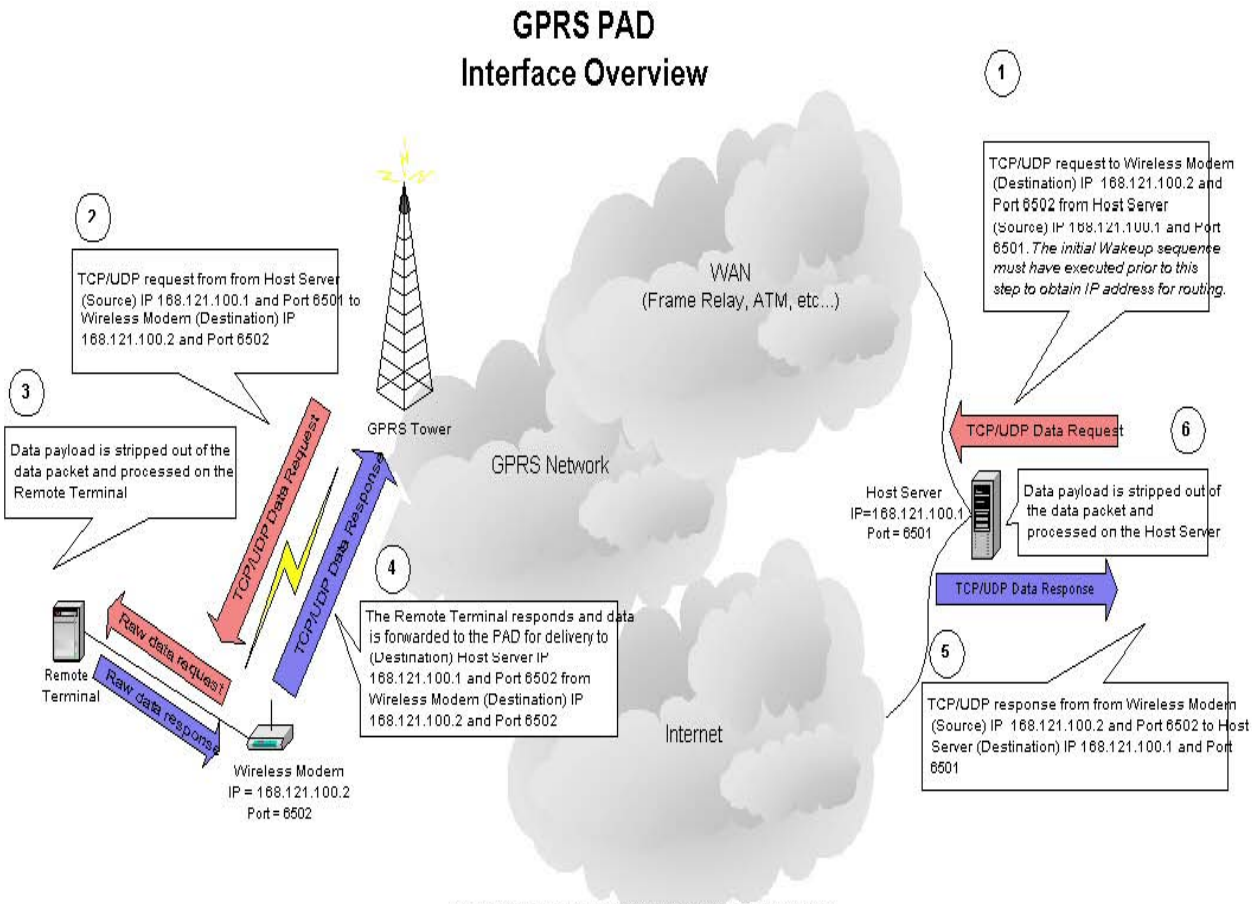

Wireless Modem Packet Assembler/Disassembler (PAD)
Configuration Parameters

AT$HOSTIF	= 1 (Establish a UDP PAD session upon ATD command) 2 (Establish a TCP PAD session upon ATD command)
AT$PADDST	= "168.121.100.1",6501 (Destination IP address and port)
AT$PADSRC	= 6502 (Source port)
AT$PADBLK	= 100 (Amount of data, in bytes, to be buffered before sending) UDP PAD Only
AT$PADCMD	= 1B (Bitwise parameter that controls PAD operation features) UDP PAD Only
AT$PADFWD	= 0D (Data forwarding character) UDP PAD Only
AT$PADTO	= 50 (Inter-Character-Timeout. Amount of time before sending data buffer) UDP PAD Only
AT$ACTIVE	= 1 (Active, Client TCP PAD mode of operation) TCP PAD Only 0 (Passive, Server TCP PAD mode of operation) TCP PAD Only
AT$CONNTO	= 60 (TCP PAD Connection Timeout. Amount of time to attempt TCP PAD connection) TCP PAD Only
AT$IDLETO	= 60 (TCP PAD Idle Timeout. Amount of idle time to wait before disconnecting the TCP PAD connection) TCP PAD Only

Figure 1 - PAD Architecture

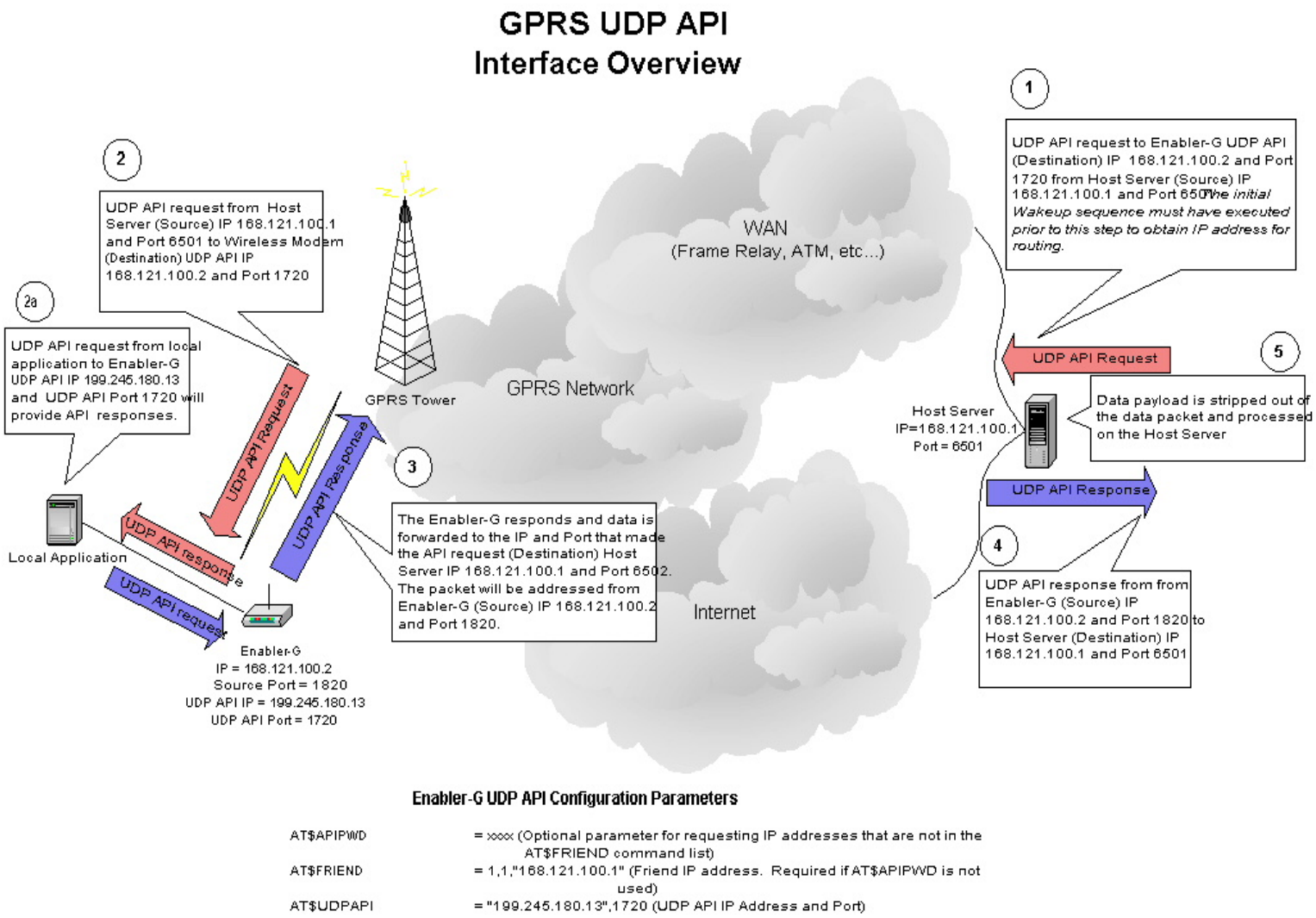

Figure 2 – UDP API Architecture

Assisted GPS System Overview

The Enfora Enabler II-G A-GPS module provides a compelling, integrated module approach to providing Assisted GPS, and GPRS packet data solutions in a single module. This implementation provides various alternatives from simple autonomous GPS processing to Assisted GPS solutions. The integration of the GPS chipset inside the Enabler modem reduces the complexity of system integration when location aware solutions are being developed. This allows for smaller sizes, faster updates, and lower overall system cost. The following diagram demonstrates the Assisted GPS architecture using Enfora Enabler II-G A-GPS module. For additional detail regarding the various GPS alternatives available, see *GSM2000PB001MAN - Enfora Integrated GPS Module Overview.*

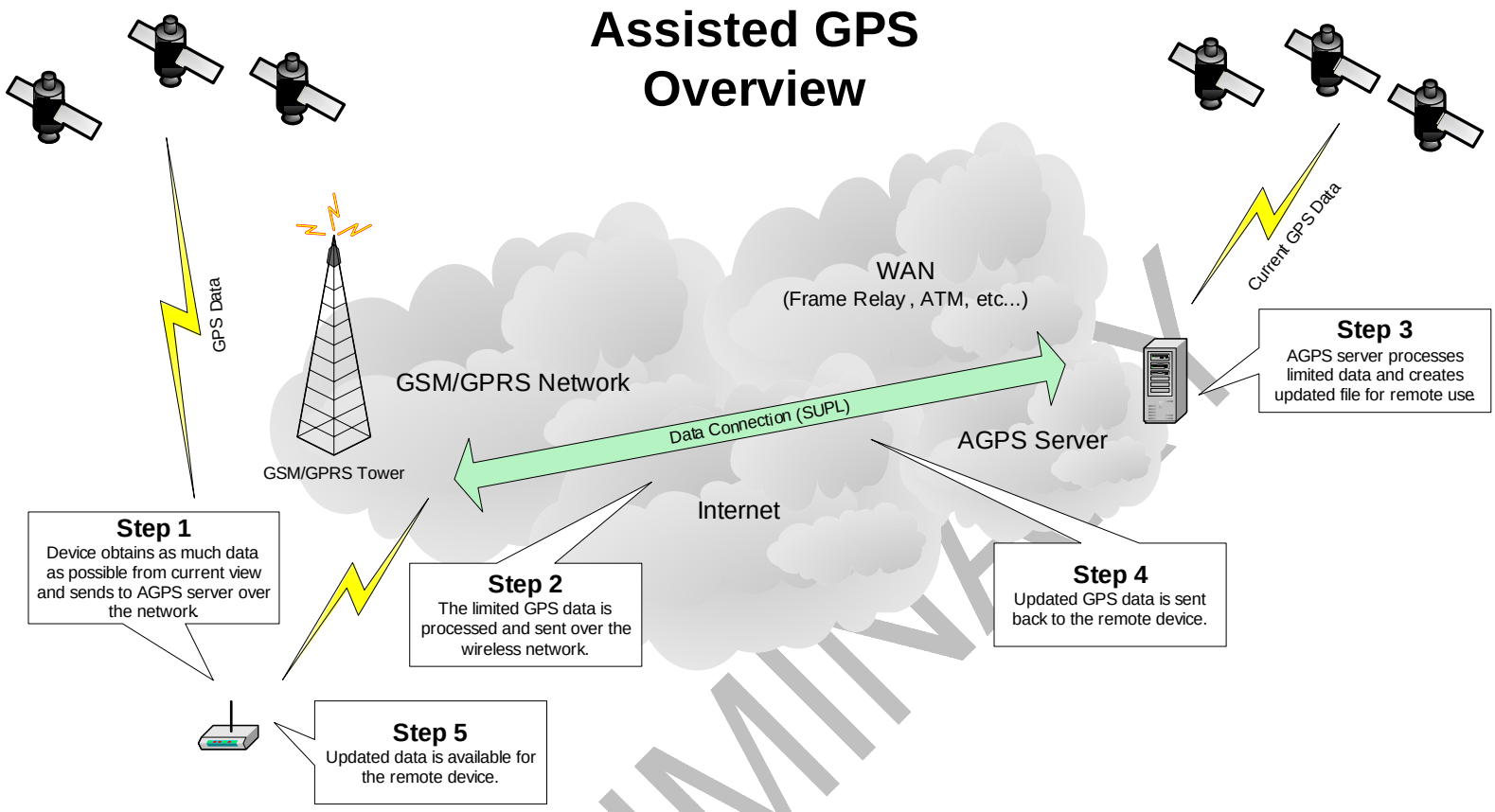

Figure 3 - Assisted GPS Architecture

PRELIMINARY

4.6 Summary of Features for the Enabler II-G A-GPS Module

The following summarizes the main features of the Enfora Enabler II-G A-GPS Module.

Mechanical

Dimensions.....46.3 mm x 30.2 mm x 3.1 mm
Weight..... < 10g

Packet Data Transfer:

Protocol GPRS Release 97 and 99 (SMG 31)
Coding Schemes CS1-CS4
Multi-Slot Capability: (Demonstrated @MS10) MS10 (4RX/2TX) (Max 5 Slots)
Packet Channel Support.....PBCCH/PCCCH

Circuit Switched Data Transfer:

V110 .....300 bps/1200 bps/2400 bps/4800 bps/9600 bps/14,400 bps
Non-Transparent.....300 bps/1200 bps/2400 bps/4800 bps/9600 bps/14,400 bps

Short Message Services:

GSM SMS.....MO, MT, CB, Text and PDU Modes
GPRS SMS.....MO, MT, CB, Text and PDU Modes

Voice Capability:

Speech Codec .....EFR, FR, HR, AMR

GPS Capability:

Receiver.....12 Channel
Output .....NMEA 183 data
Modes Supported .....Autonomous, Mobile Based, Enhanced Autonomous

GSM/GPRS Radio Performance Multi-Band:

GSM0308 Radio Frequencies .....850 (GSM), 900 (EGSM), 1800 MHz (DCS), or 1900 MHz (PCS)
Sensitivity.....-106 dBm (Typical GPRS CS1)
850 & 900 MHz Transmit Power...Class 4 (2 W)
1800 & 1900 MHz Transmit Power Class 1 (1 W)

GPS Radio Performance Multi-Band:

GPS Radio Frequencies.....1.5 GHz
Sensitivity.....-150 dBm (Typical)

System Requirements:

Host Interface .....Serial Interface
DC Voltage .....3.3 to 4.5 Vdc

PRELIMINARY

Application Interface:

Host Protocol ..... Status API and AT Commands
Internal Protocols..... UDP stack, TCP/IP stack, PPP, PAD, and CMUX
Physical Interface ..... (2) Serial 16550 – Default rate 115,200 baud
Audio Interface..... 1 Headset w/Mic & Bias, 1 Mic w/Bias, 1 Earphone

SIM Interface:

Remote SIM Option 3-Volt SIM Capability

Environmental:

Operating Temperature ..... -30 °C to 70 °C (Fully Spec Compliant)
Design Goal..... -40 °C to 85 °C
Storage Temperature..... -40 °C to 85 °C
Humidity..... 5 to 95% non-condensing

EMC:

Emissions ..... FCC Parts 15 & 24, Class B
GSM 11.10, Section 12.2
EN 55022 Class B
FCC Part 22 for GSM 850

Susceptibility..... Per ETSI ETS 300 342-1
EN 61000-4-3
ESD 4 kV contact, 8 kV air discharge
EN 61000-4-6

Operating Power (TYPICAL):

GSM Operation

GSM 850/900 (1 RX/1 TX, full power)…….254 mA average, 1.6 A peak
DCS 1800 (1 RX/1 TX, full power) ……212 mA average, 1.2 A peak
PCS 1900 (1 RX/1 TX, full power) ……200 mA average, 1.4 A peak
Idle ..... …….. < 5 mA
Shutdown..... ……≈ 10 uA

GPRS Operation Power

EGSM 850/900 (4 RX/1 TX, full power)……290 mA average, 1.6 A peak
EGSM 850/900 (2 RX/2 TX, full power)……...422 mA average, 1.6 A peak
DCS 1800 (4 RX/1 TX, full power)……244 mA average, 1.2 A peak
DCS 1800 (2 RX/2 TX, full power) ……350 mA average, 1.2 A peak
PCS 1900 (4 RX/1 TX, full power) ……232 mA average, 1.4 A peak
PCS 1900 (2 RX/2 TX, full power) ……325 mA average, 1.4 A peak
Idle ..... ……< 5 mA
Shutdown..... ……≈ 10 uA

PRELIMINARY

GSM Transmit Power

1800/1900 MHz .....GSM Power Class 1 (30 dBm ± 2 dB @ antenna connection)

850/900 MHz .....GSM Power Class 4 (33 dBm ± 2 dB @ antenna connection)

GSM/GPRS Receiver Sensitivity (Typical)

1800/1900 MHz .....-106 dBm, GPRS Coding Scheme 1 (CS1)

850/900 MHz .....-106 dBm, GPRS Coding Scheme 1 (CS1)

GPS Operation Power

Tracking .....……325 mA average, 1.4 A peak

Acquisition .....……325 mA average, 1.4 A peak

Idle .....……. < 5 mA

Shutdown …… .≈ 10 uA

GPS Receiver Sensitivity (Typical)

1.5 GHz.....-150 dBm, Tracking

1.5 GHz.....-160 dBm, Acquisition

PRELIMINARY

5.0 Technical Specifications

5.1 Enabler II-G A-GPS Module Block Diagram

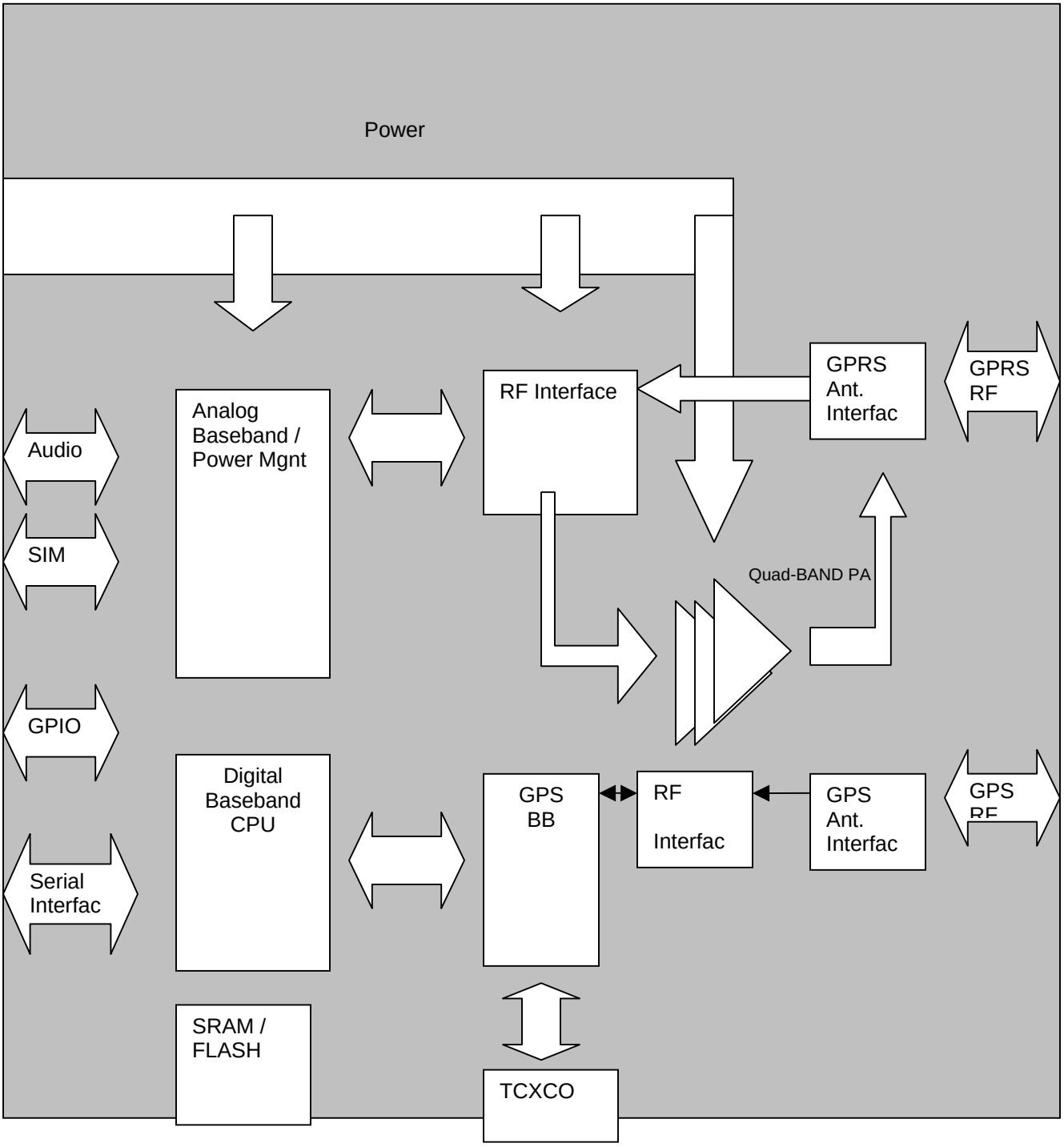

Figure 4 Enabler II-G A-GPS Module Block Diagram

PRELIMINARY

5.2 Detailed Product Specifications

5.2.1 Physical Dimensions and Weight	
Size (L x W x H)	46.3 mm x 30.2 mm x 3.1 mm
Weight	(Less than 10 g.)

5.2.2 Climatic: Operational	
Operating temperature	-30°C to +70°C **(-40°C to +85°C Design Goal)**
Relative humidity	5 - 95%
Solar radiation	Not Applicable
Air pressure (altitude)	70 kPa to 106 kPa (-400 m to 3000 m)

5.2.3 Climatic: Storage and ansportation	
Duration	24 months
Ambient temperature	-40C to +85C
Relative humidity	5% to 95%, non condensing (at 40C)
Thermal shock	-50C to +23C, +70C to +23C; < 5 min
Altitude	-400 m to 15,000 m

5.2.4 Mechanical: Operational	
Operational vibration, sinusoidal	3.0 mm disp, 2 to 9 Hz; 1 m/s^2, 9 to 350 Hz
Operational vibration, random	0.1 m^2/s^3, 2 to 200 Hz

5.2.5 Mechanical: Storage and ansportation	
Transportation vibration, packaged	ASTM D999
Drop, packaged	ASTM D775 method A, 10 drops
Shock, un-packaged	150 m/s^2, 11 ms, half-sine per IEC 68-2-27
Drop, un-packaged	4-inch drop per Bellcore GR-63-CORE

5.2.6 Mechanical: Proposed Standards	
Transportation	ETSI Standard ETS 300 019-1-2 Class 2.3 Transportation
Operational	ETSI Standard ETS 300 019-1-3 Class 3.1 Operational
Storage	ETSI Standard ETS 300 019-1-1 Class 1.2 Storage

5.2.7 Electromagnetic Emissions	
Radiated spurious	FCC Part 24 / Part 15 Class \ B GSM 11.10 Section 12.2 EN 55022 Class B

5.2.8 Electromagnetic Immunity **5.2.9 (per ETSI ETS 300 342-1)**	
Radio Frequency (RF) Electromagnetic Field	3 V/m 800 – 1000 MHz; 1 kHz 80% EN 61000-4-3
Electrostatic discharge (ESD)	Contact discharge to coupling planes: ±2 kV, ±4 kV Air discharge to coupling planes: ±2 kV, ±4 kV, ±8 kV
RF common mode	3 V rms (Level 2) 150 kHz – 80 MHz EN 61000-4-6

PRELIMINARY

5.3 Operating Power

The Enfora Enabler II-G A-GPS module requires an input voltage of 3.3 Vdc to 4.5 Vdc.

5.3.1 GSM Operating Power

Enfora Enabler II-G (@ 3.76 Volts)			Typical Current (mAmps)	Typical Peak Current (Amps)
GSM 850 **EGSM 900**	**GSM**	1 TX 1 RX 1 RX Idle	254 mA 104 mA < 5 mA	1.6 A @ 32.5 dBm
DCS 1800	**GSM**	1 TX 1 RX 1 RX Idle	212 mA 104 mA < 5 mA	1.2 A @ 29.5 dBm
PCS 1900	**GSM**	1 TX 1 RX 1 RX Idle	200 mA 104 mA < 5 mA	1.4 A @ 29.5 dBm

5.3.2 GPRS Operating Power

Enfora Enabler II-G (@ 3.76 Volts)			Typical Current (mAmps)	Typical Peak Current (Amps)
GSM 850 **EGSM 900**	**GPRS**	1 TX /1RX 2 TX/ 2RX 1 TX/ 2RX 1 TX/ 3RX 1 TX/ 4RX 1 RX Idle	240 mA 422 mA 253 mA 270 mA 290 mA 104 mA < 5 mA	1.6 A @ 32.5 dBm
DCS 1800	**GPRS**	1 TX /1RX 2 TX/ 2RX 1 TX/ 2RX 1 TX/ 3RX 1 TX/ 4RX 1 RX Idle	196 mA 350 mA 207 mA 224 mA 244 mA 104 mA < 5 mA	1.2 A @ 29.5 dBm
	GPRS	1 TX /1RX 2 TX/ 2RX 1 TX/ 2RX 1 TX/ 3RX 1 TX/ 4RX 1 RX Idle	183 mA 325 mA 195 mA 212 mA 232 mA 104 mA < 5 mA	1.4 A @ 29.5 dBm

5.3.3 GSM Transmit Power

Enfora Enabler II-G module	Power Class	Transmit Power
1900 MHz **1800 MHz**	GSM Power Class 1	1-W conducted power maximum (30 dBm +/- 2 dB), measured at the antenna port
850 MHz **900 MHz**	GSM Power Class 4	2-W conducted power maximum (33 dBm +/- 2 dB), measured at the antenna port

5.3.4 GSM Receiver Sensitivity

Enfora Enabler II-G A-GPS module	Sensitivity	Mode
1900 MHz **1800 MHz**	-106 dBm (typical)	**GPRS Coding Scheme 1 (CS1)**
900 MHz **850 MHz**	-106 dBm (typical)	**GPRS Coding Scheme 1 (CS1)**

5.3.5 GPS Operating Power

Enfora Enabler II-G (@ 3.76 Volts)	Typical Current (mAmps)	Typical Peak Current (Amps)
Tracking **Acquisition** **Sleep** **Shutdown**	240 mA 422 mA 253 mA ~ 10 uA	

5.3.6 GPS Receiver Sensitivity

Enfora Enabler II-G A-GPS module	Sensitivity	Mode
1500 MHz	–106 dBm (typ)	**Autonomous Mode**

5.3.7 Enabler Remote On (Pin 24)

Low is modem OFF. High is modem ON.

Radio Power/Reset	Parameter/Conditions	MIN	TYP	MAX	UNIT
V_{IL}	Input Voltage - Low	**-0.5**		**0.9**	**Vdc**
V_{IH}	Input Voltage - High	**2.0**		**3.4**	**Vdc**

PRELIMINARY

6.0 Physical Interfaces

PRELIMINARY

6.1 Physical Layout

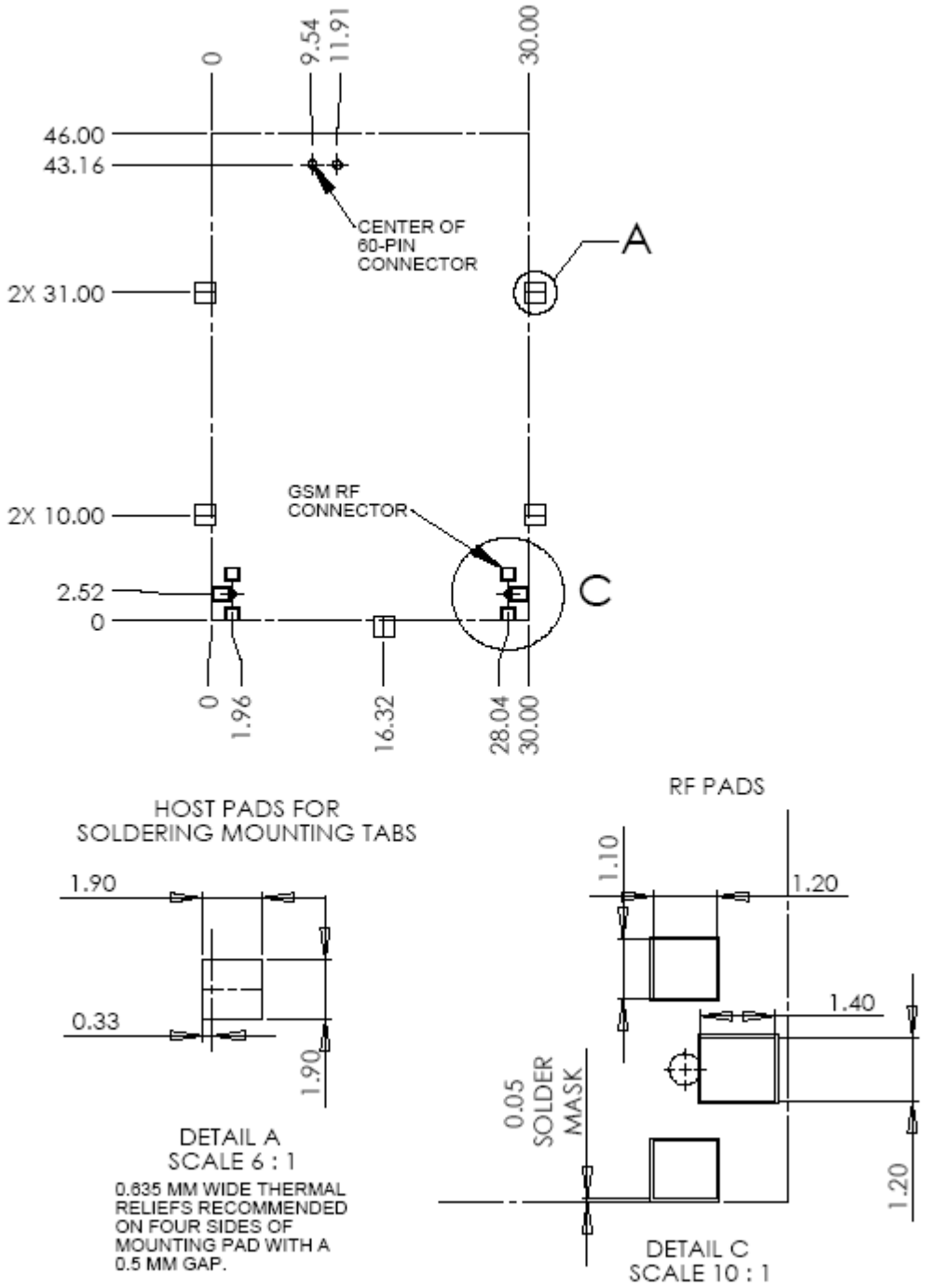

Figure 5 Enabler II-G Package Dimensions (without integrated SIM carrier)

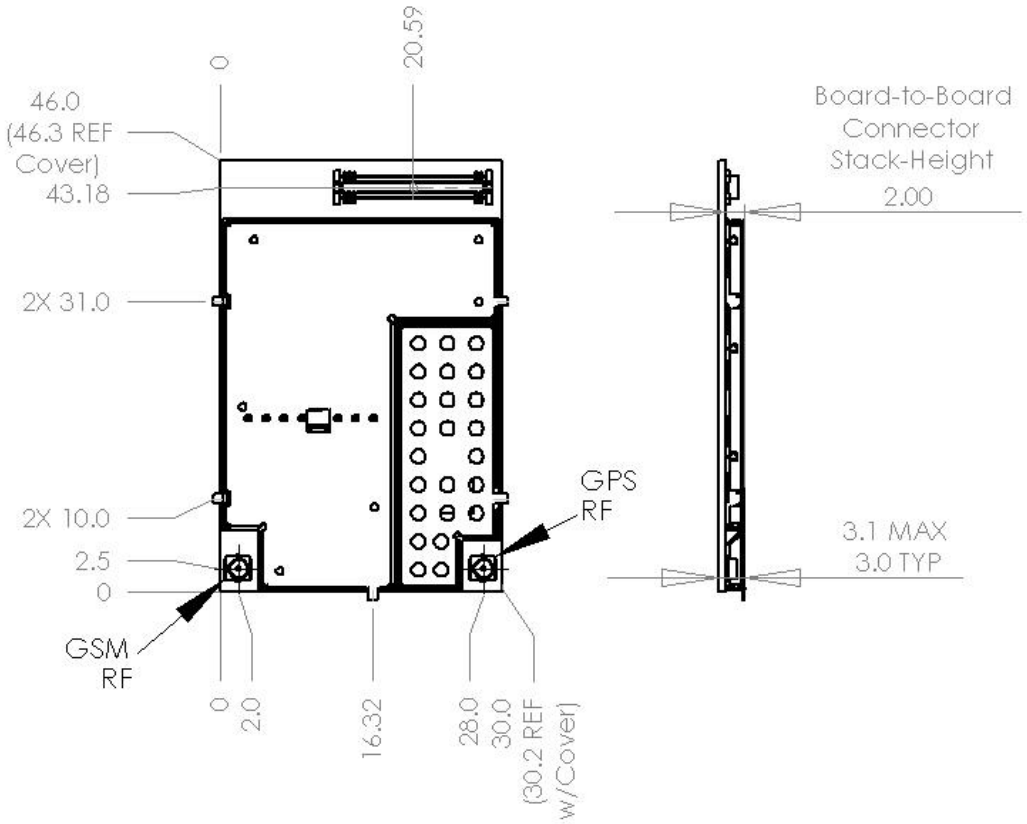

Figure 6 Enabler II-G Package Dimensions (with integrated SIM carrier)

- Use 46.3 X 30.2 X 3.1 as overall module dimension
- Mated 60-pin I/O connector stack height is 2.0 MM
- If mounting screw is used, a nylon washer is recommended at board interface. A maximum diameter of 4.00 should be used for all fastening hardware.
- Antenna direct connect solder pad is 1.02 mm wide X 2.54 mm high.
- Antenna ground pads are 2.03 mm wide X 2.54 mm high.

PRELIMINARY

6.2 Enabler II-G A-GPS Module Mounting Reference

Figure 7 Provides Enabler II-G A-GPS module vertical mounting information.

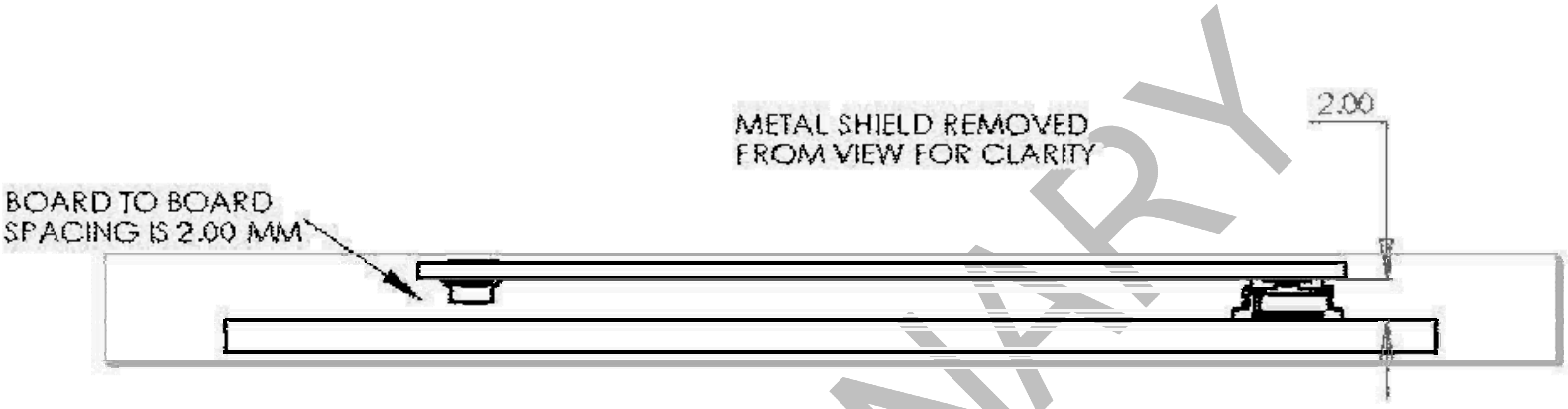

Figure 7 Vertical Enabler II-G Mounting

The Enabler II-G A-GPS module provides mounting tabs that can be soldered to a PCB. These tabs provide circuit grounding for the module and their use is recommended. Figure 8 provides mounting tab reference for PCB integration.

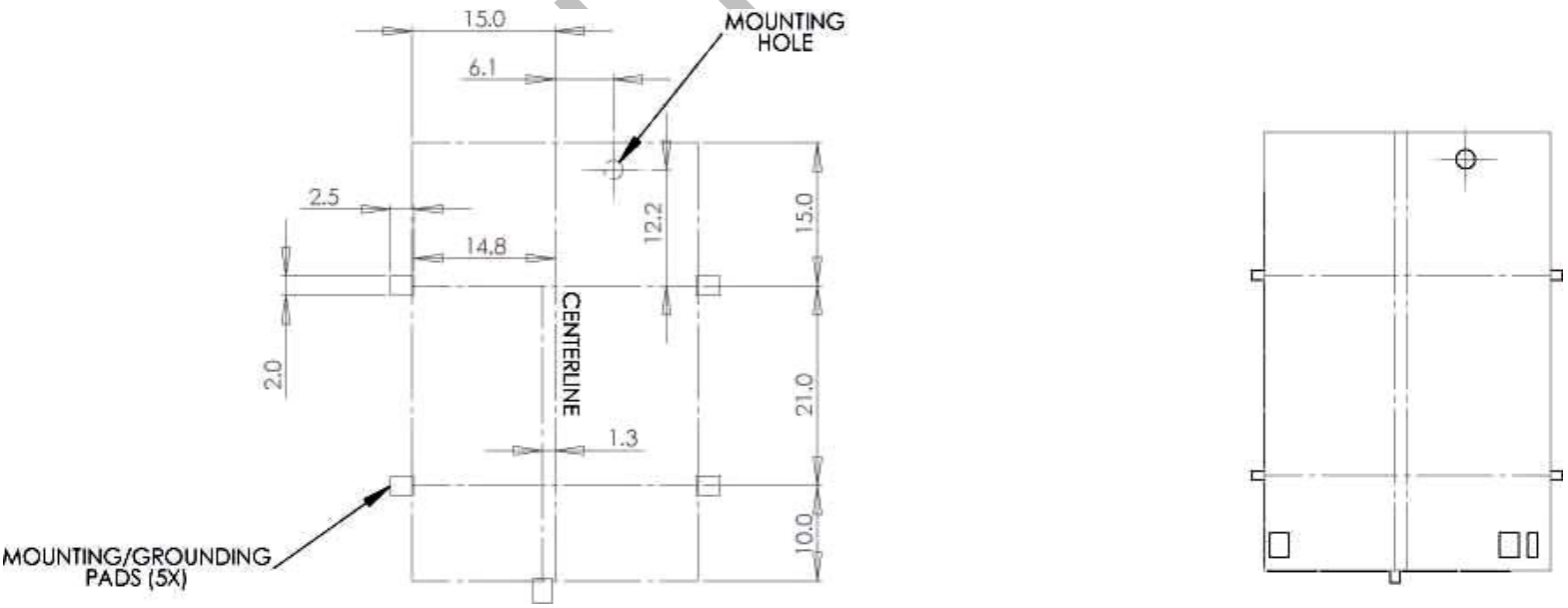

Figure 8 Enabler II-G Mounting Tabs

PRELIMINARY

6.3 Module Pin Orientation Reference

59	.	.	.	.	.	.	25	23	21	19	17	15	13	11	9	7	5	3	1
60	.	.	.	.	.	.	26	24	22	20	18	16	14	12	10	8	6	4	2

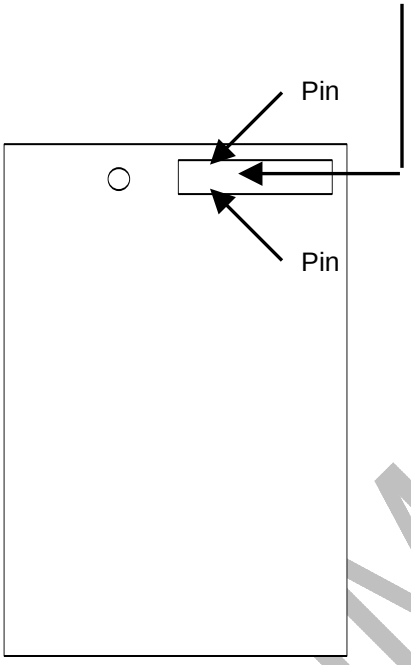

Figure 9 Module Pin Orientations

PRELIMINARY

6.3 Connectors

6.3.1

6.3.2 Enabler II-G A-GPS I/O Control Connector

The connector used to interface to the host is a 60-pin, SMT, Dual Row, Vertical Stacking: .50MM (.020") Pitch Plug; Molex part number 53729-0604.

6.3.3 PCB Integration I/O Control Connector

The mating connector for a board mount application is a 60-pin, SMT, Dual Row, Vertical Stacking: .50MM (.020") Pitch Receptacle; Molex part number 52974-0604 or 52974-0608.

6.3.4 I/O Signal Connector on the Enfora Enabler II-G A-GPS Module

The Enfora Enabler II-G A-GPS module communicates with the carrier board of the application via the 60-pin I/O signal connector. The following table describes the pin assignments for the connector, sorted by pin number.

6.3.5 I/O Connector Pin Assignments

The following table shows the pin assignments for the input/output connector. The pin assignments are shown in order of functionality.

Table 2 - Enabler II-G A-GPS Pin Assignments

PIN #	FUNCTION	Serial Pin	I/O	ENABLER II-G A-GPS	Description/Comments
1	Power Input		P	Batt/Vcc	Electrical power input to Enabler II-G A-GPS module.
2	Power Input		P	Batt/Vcc	Electrical power input to Enabler II-G A-GPS module.
3	Power Input		P	Batt/Vcc	Electrical power input to Enabler II-G A-GPS module.
4	Power Input		P	Batt/Vcc	Electrical power input to Enabler II-G A-GPS module.
5	Power Input		P	Batt/Vcc	Electrical power input to Enabler II-G A-GPS module.
6	Power Input		P	Batt/Vcc	Electrical power input to Enabler II-G A-GPS module.
7	Ground		R	GND	Electrical power return for digital and analog grounds.
8	Ground		R	GND	Electrical power return for digital and analog grounds.
9	Handset Speaker (-)		O	INTERNAL_SPK(-)	Handset speaker output (negative).
10	Power Input		P	Batt/Vcc	Electrical power input to Enabler II-G A-GPS module.
11	Ground		R	GND	Electrical power return for digital and analog grounds.
12	Power Input		P	Batt/Vcc	Electrical power input to Enabler II-G A-GPS module.
13	Handset Speaker (+)		O	INTERNAL_SPK(+)	Handset speaker output (positive).
14	GPIO-1		I/O	GPIO-1	General-purpose Input/Output.
15	Ground		R	GND	Electrical power return for digital and analog grounds.
16	Ground		R	GND	Electrical power return for digital and analog grounds.
17	Microphone Bias		O	VMIC	Microphone Bias.
18	GPO-5		O	GPO-5	General-purpose Output.
19	Ground		R	GND	Electrical power return for digital and analog grounds.
20	Reserved				Reserved for future use.
21	Handset Microphone (-)		I	INT_MIC(-)	Handset microphone input (negative).
22	Radio Power/Reset		I	RADIO_PWR/RST	Radio power/reset.
23	Ground		R	GND	Electrical power return for digital and analog grounds.
24	Power Control Signal		I	PWR_CTL_SIGNAL	Power Control Signal.
25	Handset Microphone (+)		I	INT_MIC(+)	Handset microphone input (positive).
26	Reserved				Reserved for future use.
27	GPIO-3		I/O	GPIO-3	General-purpose Input/Output.
28	GPIO-2		I/O	GPIO-2	General-purpose Input/Output.
29	Reserved				Reserved for future use.
30	GPIO-4		I/O	GPIO-4	GPIO/MCSI TX.
31	Reserved				Reserved for future use.
32	GPIO-6		I/O	GPIO-6	GPIO/MCSI RX.
33	Ground		R	GND	Electrical power return for digital and analog grounds.
34	GPIO-7		I/O	GPIO-7	GPIO/MCSI CLK.
35	DAC		O	DAC	Digital-to-Analog Output. 0.3 to 2.0 Vdc minimum range
36	RTC Power		I	V_{BAK}	Modem backup power for real-time clock.
37	Reserved				Reserved for future use.
38	Headset Earphone (+)		O	HEADSET_SPK(+)	Headset Earphone (positive).
39	GPIO-8		I/O	GPIO-8	GPIO/MCSI FSNC.
40	Headset Microphone (-)		I	HEADSET_MIC(-)	Headset Microphone (negative).
41	Ground	5	R	GND	Electrical power return for digital and analog grounds.
42	Headset Microphone (+)		I	HEADSET_MIC(+)	Headset Microphone (positive).
43	Serial Receive Data	2	O	RXD_RADIO	Serial Data to Host.
44	Ground		R	GND	Electrical power return for digital and analog grounds.
45	Data Set Ready	6	O	DSR_RADIO	DSR Signal to Host.
46	ADC2		I	ADC2	Analog-to-Digital Converter Input 2. 0 – 1.75 Vdc range. 1.709 mV resolution. 10 bit.
47	Data Carrier Detect	1	O	DCD	DCD Signal.
48	SIM Clock		O	SIM_CLK	SIM Clock.
49	Ring Indicator	9	O	RI	RING Indicator.

50	Ground		R	GND	Electrical power return for digital and analog grounds.
51	Serial Transmit Data	3	I	TXD_RADIO	Serial Data from Host.
52	SIM I/O		I/O	SIM_IO	SIM I/O Data.
53	Request To Send	7	I	RTS_RADIO	RTS Signal from Host.
54	SIM Reset		O	SIM_RST	SIM Reset.
55	Clear To Send	8	O	CTS_Radio	CTS Signal to Host.
56	ADC1		I	ADC1	Analog-to-Digital Converter Input 1. 0 – 1.75 Vdc range. 1.709 mV resolution. 10 bit.
57	Data Terminal Ready	4	I	DTR_RADIO	DTR Signal to Host.
58	SIM Power		O	SIM_VCC	SIM Power.
59	Ground		R	GND	Electrical power return for digital and analog grounds.
60	Ground		R	GND	Electrical power return for digital and analog grounds.

I=Input into Enabler; **O**=Output from Enabler; **P**=Power Input to Enabler; **R**=Power Return from Enabler; **I/O**=Input/Output into/from Enabler

NOTE: *There is a functionality change on Pin 18 from the GSM0108-xx. Pin 18 is now General Purpose Output. In prior modules, Pin 18 has been a General Purpose I/O pin.*

Reserved for future use

NO CONNECT if on-board SIM holder is used

6.4 Circuit Protection

Other than the basic low level ESD protection within the module's integrated circuits (typically 2000 V), the Enabler II-G A-GPS module does not have any protection against ESD events or other excursions that exceed the specified operating parameters.

The only exception is that the remote SIM lines on the main I/O connector do have additional ESD protection that should handle standard human-model contact ESD events.

Generally, ESD protection (typically TVS/Transzorb devices) should be added to all signals that leave the host board. This includes V_{BAT}/V_{CC}.

Series resistors (typically 47 Ω) can also be added in series with data lines to limit the peak current during a voltage excursion.

Caution – It is the Integrator's responsibility to protect the Enabler II-G A-GPS module from electrical disturbances and excursions, which exceed the specified operating parameters.

6.5 Antenna

A custom quad-band antenna can be attached via the on-board connector or soldered directly to the modem. Each antenna direct connect solder pad is 1.02 x 2.54 MM. A passive GPS antenna can also be used to connect to the on-board connector or soldered directly to the modem.

PRELIMINARY

However, if the GPS antenna is more than 10 cm away from the module (a very likely scenario), one should consider using an active GPS antenna. An active antenna has an integrated low noise amplifier (LNA). Active antennas need power supplied to them. The power is usually routed the coax cable.

One should also take care in selecting the active antenna. The LNA gain maybe too large and saturate the input to the GPS receiver. A LNA gain of about 15 dB should be sufficient to drive coax cables of 5 meters. A gain greater than 15dB may damage the GPS device. Please check the design to see if you need to provide external power to the active antenna.

6.5.1 Antenna Solder Pads

Pads are provided to solder a cable or antenna directly to the Enabler II-G A-GPS board.

PRELIMINARY

6.5.2 RF Connector

The Enabler II-G A-GPS module utilizes an ultra Miniature Coaxial Interconnect from Sunridge (MCB-ST-00T) as the on-board antenna connector. A compatible mating connector is the Sunridge MCB2-xx-xx-xxx-x series component. The cable assembly is made to order. Maximum stack height of cable connector and PCB connector is 2.0 mm.

6.5.3 GPS Antenna Connector

The Enabler II-G A-GPS module utilizes an ultra Miniature Coaxial Interconnect from Sunridge (MCB-ST-00T) as the on-board GPS antenna connector. A compatible mating connector is the Sunridge MCB2-xx-xx-xxx-x series component. The cable assembly is made to order. Maximum stack height of cable connector and PCB connector is 2.0 mm.

6.6 Control Connector Signal Descriptions and Functions

6.6.1 Input Power

The Enfora Enabler II-G A-GPS module uses a single voltage source of VCC=+3.3V to 4.5V. (The exact values of the uplink currents are shown in Tables5.3.1 GSM Operating Power and 5.3.2 GPRS Operating Power). The V_{CC} lines (pins 1 to 6) should be connected on the application board.

The uplink burst will cause strong ripple on the voltage lines and should be effectively filtered. It is recommended that 1000 to 2000 µF of capacitance be placed as close to the modem I/O connector as possible.

It should be noted that the input voltage level should not drop below the minimum voltage rating under any circumstances, especially during the uplink burst period.

PRELIMINARY

6.6.2 Ring Indicate

The Enabler II-G A-GPS module is capable of using the Ring line to discern the type of incoming call. The indicator can be monitored via a hardware line available on the 60-pin I/O signal connector. The Ring Indicator pin is #49.

The function of the Ring line depends on the type of the call received.

When the module is receiving a *voice call,* the Ring line goes low for 1 second and high for another 2 seconds. Every 3 seconds the ring string is generated and sent over the Receive (Data Out) (Rx) line. If there is a call in progress and call waiting is activated for a connected handset or hands free device, the Ring pin switches to ground in order to generate acoustic signals that indicate the waiting call.

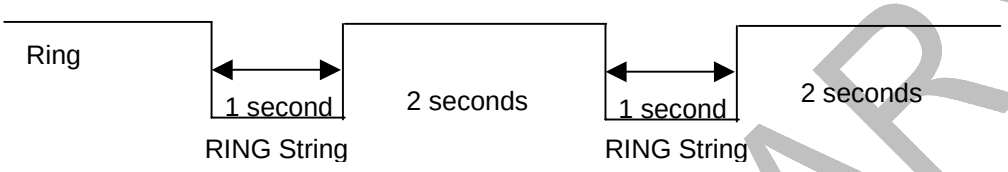

When a *Fax* or *data call* is received, Ring goes low and will remain low. Every 3 seconds a ring string is generated and sent over the Receive (Data Out) (Rx) line.

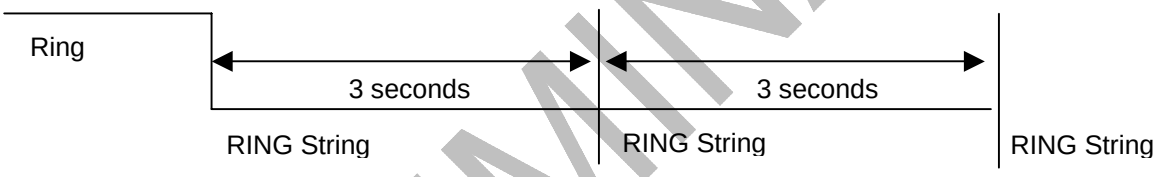

An incoming *SMS* can be indicated by an Unsolicited Result Code (URC) which causes the Ring line to go low for 1 second only. Using the AT+CNMI command, the Enabler II-G A-GPS module can be configured to send or not to send URCs upon the receipt of SMS. See Enfora ***GSM/GPRS OEM Module AT Command Set Reference - GSM0102PB001MAN***.

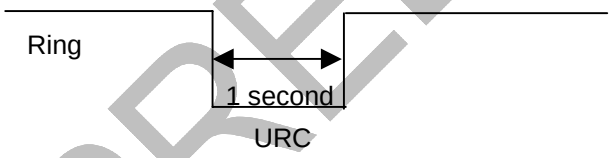

Figure 10 Ring Indicate Timing

6.6.3

PRELIMINARY

6.6.4 Radio Power/Reset (Pin 22)

A pulse on this Active-High input resets/restarts the module. This input has a "weak pull-down" resistor internal to the module and can be left open-circuit or grounded if it is not going to be used. To initiate a reset, provide a high-pulse of at least 50 ms duration.

PARAMETER	PARAMETER / CONDITIONS	MIN	TYP	MAX	UNIT
V_{IL}	Input Voltage – Low or float	0		0.3 x V_{BAT}	Vdc
V_{IH}	Input Voltage – High	0.7 x V_{BAT}		V_{BAT}	Vdc
I_{PD}	Internal Pull-Down Resistor	-40		-2	µA
Pulse Duration	High Pulse Duration	50			mS

6.6.5 Using the Power Control Signal

6.6.6

Figure 11 shows a typical connection to the MLG0208 module in a machine-to-machine application using the external **PWR_CTL_SIGNAL** solution, where there is no external processor controlling the I/O, serial, or power on/off states. RTC deep sleep functions will **NOT** function since the **PWR_CTL_SIGNAL** pin is tied low, the processor will never stay in a "RTC Sleep" mode. To reset the module, power (**BATT**) must be cycled. **VBAK** must be connected to an uninterruptible power source if RTC time is to be retained.

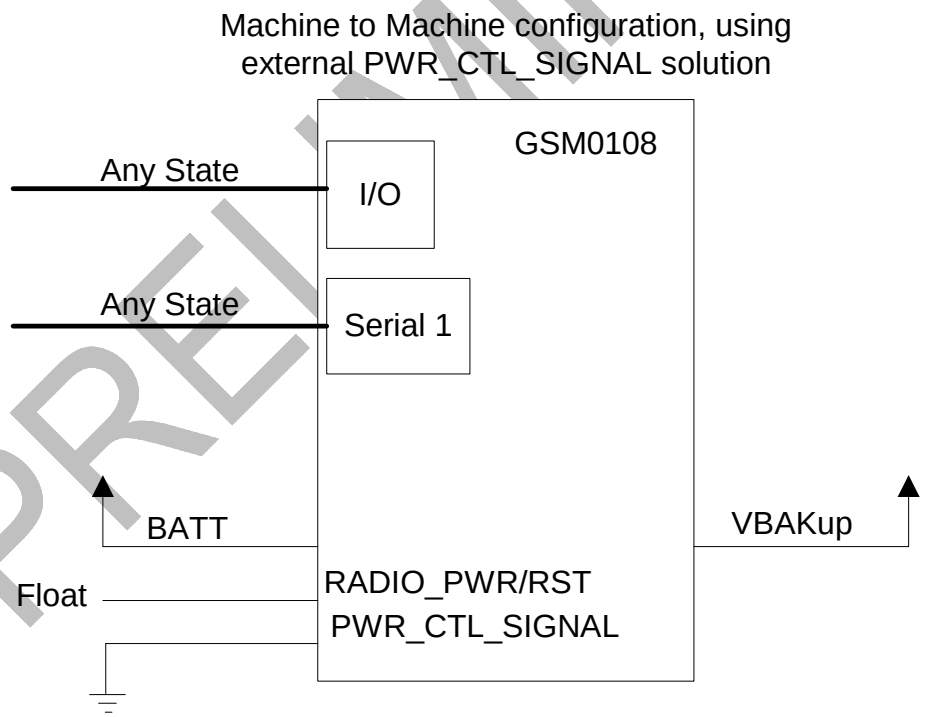

Figure 11 External Power Control Signal (no external processor)

PRELIMINARY

Figure 12 shows a variation of the connection in Figure 11 External Power Control Signal (no external processor) by using an external RC circuit to generate a pulse that will allow the processor to enter the RTC deep sleep modes. This will keep the **PWR_CTL_SIGNAL** signal low for at least 50ms during startup. To reset the module, power (BATT) must be cycled, and power must be removed long enough for the RC to discharge.

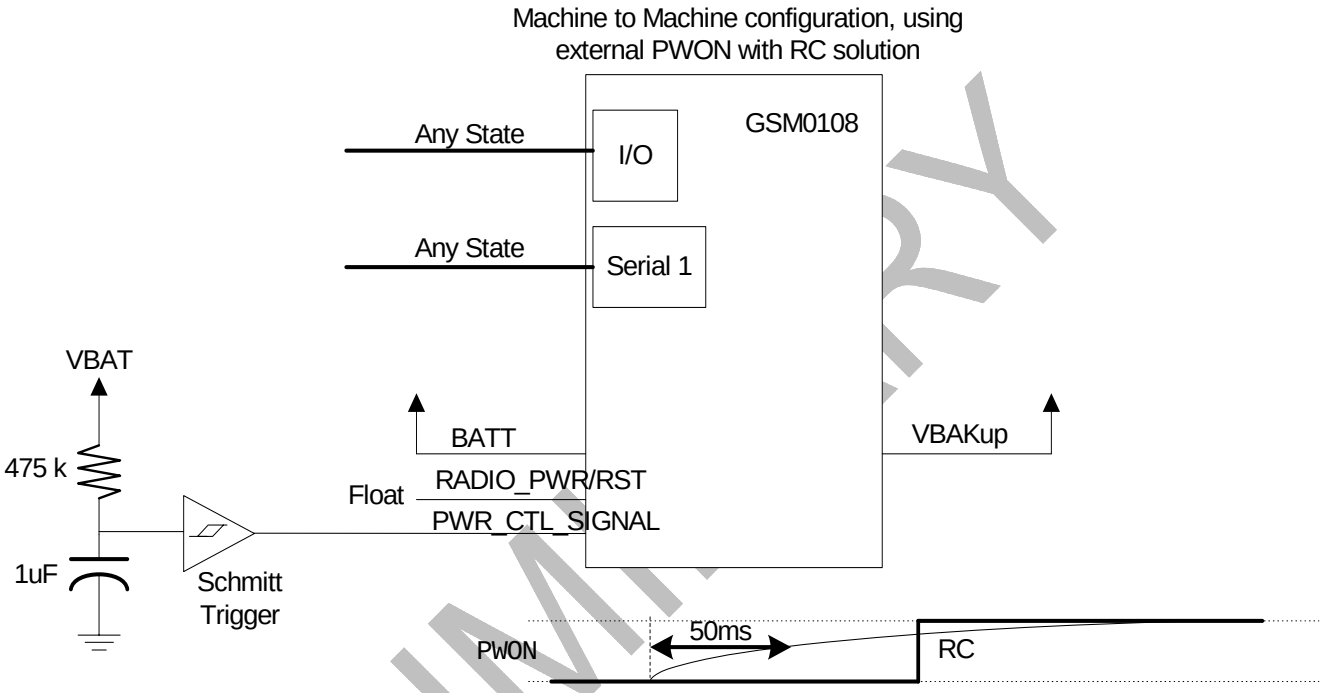

Figure 12 External Power Control Signal (using external RC circuit)

PRELIMINARY

Figure 13 shows a typical connection from an external processor to the MLG0208 module, using the external **PWR_CTL_SIGNAL** solution. The MLG0208 can be powered on by using the **PWR_CTL_SIGNAL** signal. When using **PWR_CTL_SIGNAL**, the I/O or serial lines can be at any voltage state desired. It is suggested that the I/O and serial lines be tri-stated or set low when the MLG208 is shutdown for an extended period of time to conserve power.

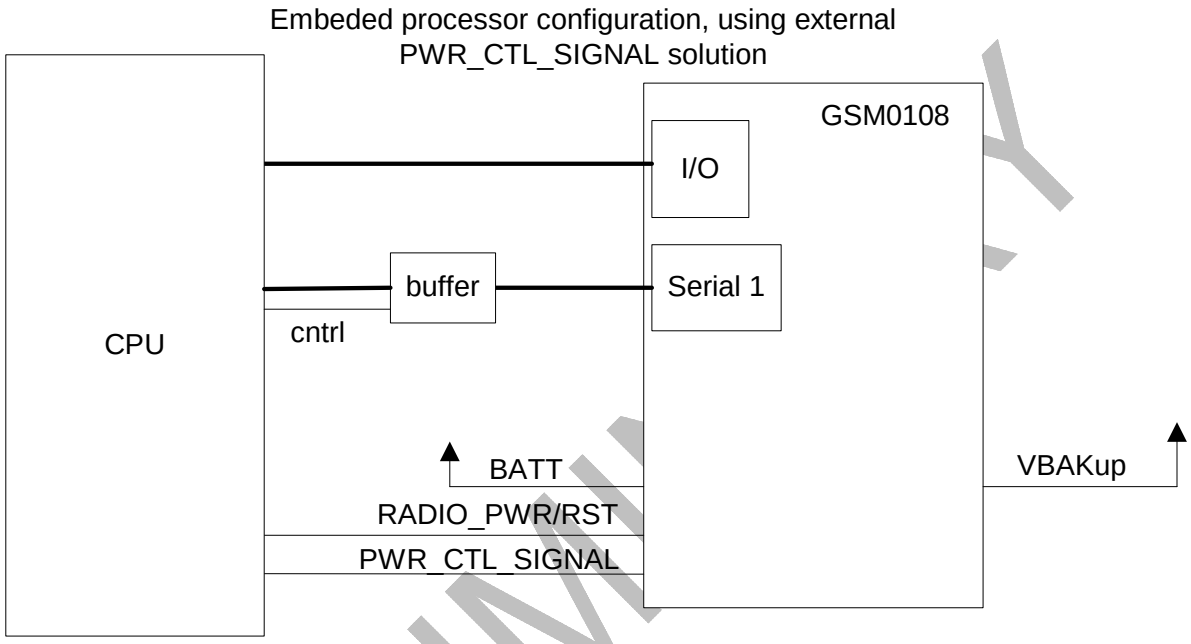

Figure 13 Power Control Signal (using external processor)

PRELIMINARY

Figure 14 shows a typical power on sequence for the CPU to MLG0208 interface. Note that **RADIO_PWR/RST** is not used, and the I/O and serial voltage levels are not a concern.

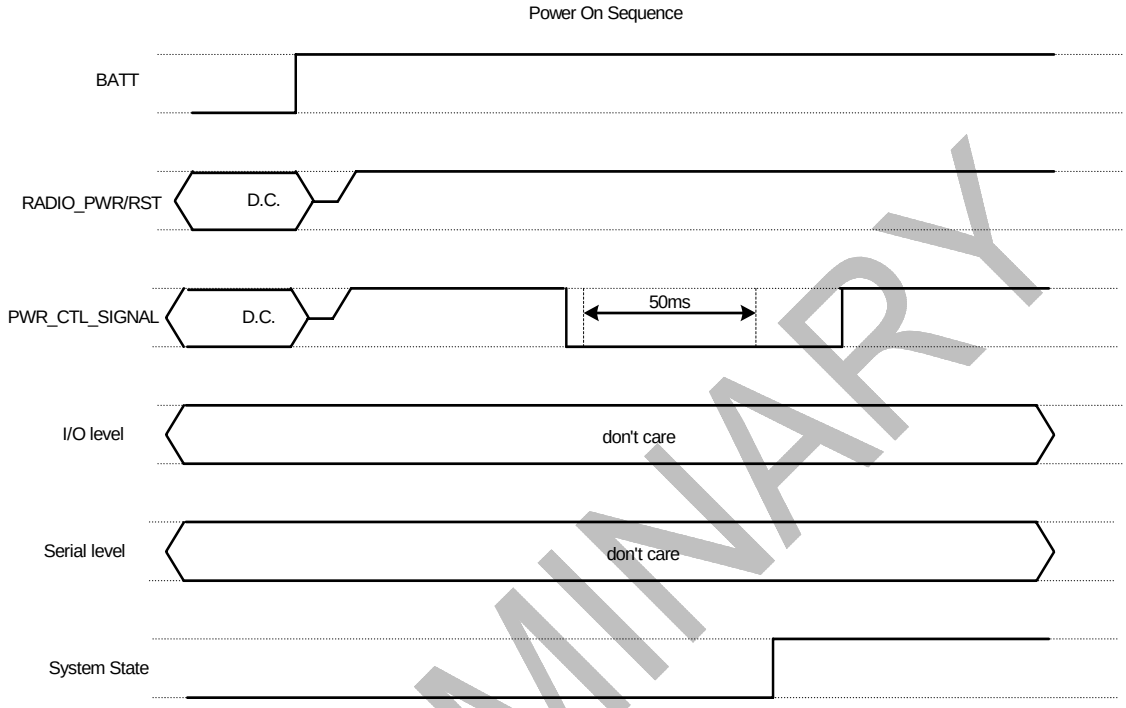

Figure 14 Typical Power On Sequence (using external processor)

PRELIMINARY

Figure 15 shows a Reset, or power down sequence using the **RADIO_PWR/RST** signal with the CPU to MLG0208 interface. Note that the I/O and serial lines MUST be either tri-stated or pulled to GND. If this is not done, it cannot be guaranteed that **RADIO_PWR/RST** will reset the MLG0208.

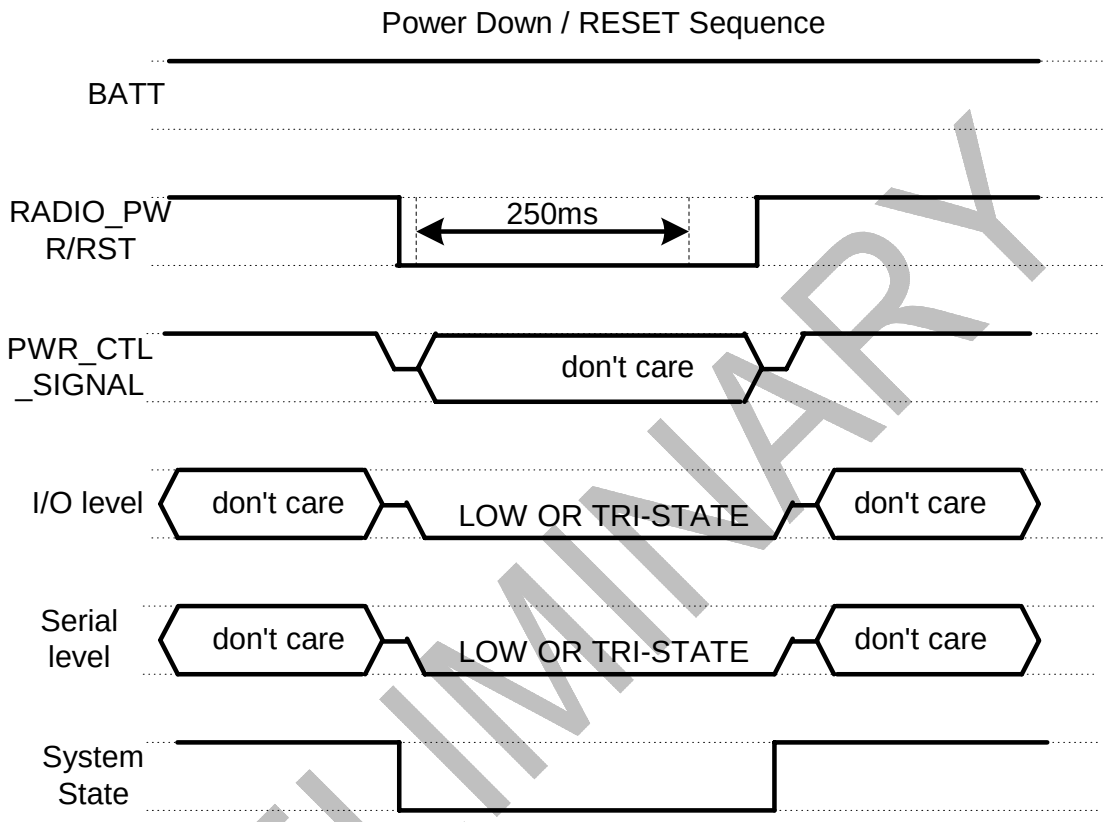

Figure 15 Power Down/Reset (using external processor)

PARAMETER	PARAMETER / CONDITIONS	MIN	TYP	MAX	UNIT
V_{IL}	Input Voltage – Low or float	**0**		**0.3 x V_{BAT}**	**Vdc**
V_{IH}	Input Voltage – High	**0.7 x V_{BAT}**		**V_{BAT}**	**Vdc**
I_{PU}	Internal Pull-Up Resistor	**-20**		**-2**	**µA**
ON Pulse Duration		**100**			**mS**
OFF Pulse Duration	Programmable	**1000**		**10000**	**mS**

PRELIMINARY

6.6.7 Using VBAK

VBAK is a backup voltage that can maintain the RTC clock and alarm functions. If **VBAK** is not present in the system (intentionally or not) and **RADIO_PWR/RST** is active low, the RTC clock may still be powered if leakage voltage exists on VCC. Otherwise the RTC clock will loose power and be reset when VCC is restored.

PARAMETER	PARAMETER / CONDITIONS	MIN	TYP	MAX	UNIT
Backup Voltage (Real-Time-Clock)					
V_{BACKUP}	Backup Voltage for Real-Time-Clock	2.7	3.0	4.5	Vdc
I_{BACKUP}	Input Current (V_{BACKUP} = 3.2 V, V_{BAT} = 0 V, No Load on GPIO or Serial Port)		3.0	6.0	µAdc

VBAK had been tested in the above scenarios and does not contribute to leakage. It will properly provide backup power to the RTC clock.

6.6.8 Serial Interface for UART and GPS

The modem provides a standard 16550 UART serial interface to the host. The data interface operates at CMOS level. The Enabler II-G A-GPS module is designed to be used like a DCE device or can also mux the serial port to share the port between serial data and GPS NMEA information. Below are descriptions of the various serial architectures used to interface with the GPS chipset integrated into the module.

This serial interface data may contain 7 or 8 data bits, 1 or 2 stop bits, even/odd/no parity bits. The baud rate may be adjusted to 75, 150, 300, 1200, 2400, 4800, 9600,19200, 38400, 57600, or 115200 bits per second.

Default settings are 8 data, 1 stop, no parity, and 115200 baud. DTR may be used to force the modem into AT command mode from online data mode (See AT Command Document, command AT&D). RTS and CTS may be used for hardware handshaking. DSR is always active (connected to ground) while the modem is on. RING may be used to alert the host to a variety of incoming calls.

For a minimal implementation, connect RxData and TxData to the COM port serial data lines, connect DTR and RTS to GND.

The electrical characteristics for the I/O lines are the same as the General Purposes Input/Output (GPIO) lines.

6.6.9 Dedicated Serial Interface

This architecture provides dedicated serial ports for exclusive processing of GPS and network data. One port would be dedicated to communication with the wireless module and the other would be dedicated to the GPS receiver. Integrators would choose the serial interface(s) that they would like to use and process data accordingly. An example diagram illustrating the architecture is shown below:

PRELIMINARY

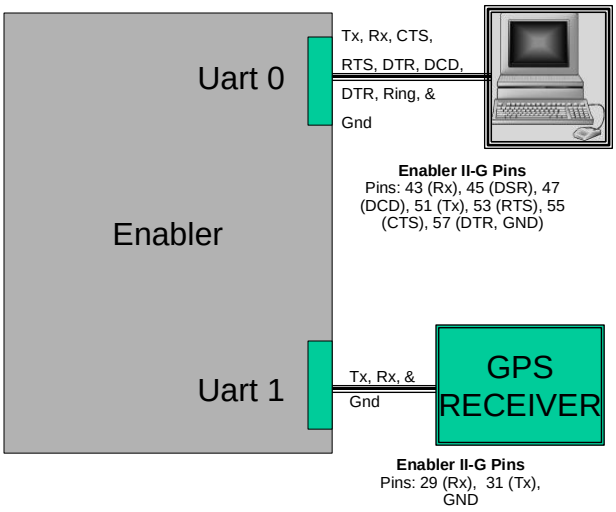

Figure 16 Enabler II-G A-GPS Module Serial Interface with Dedicated Serial Port and GPS Port

The one tradeoff with this architecture is the loss of the modem debug port. This configuration does allow one to debug issues with the GPRS modem in the development phase.

6.6.9.1 Single Serial Port with Debug port

The implementation of a single serial port would utilize a multiplexing architecture combining both GPS and network data over a single PPP connection. The other serial port would remain a debug port, as it exists today in the current module architecture. The integrator would have to write the supporting application/driver that would reside on the target modem to handle the muxing of the network data and the GPS data. An example diagram illustrating the architecture is shown below:

PRELIMINARY

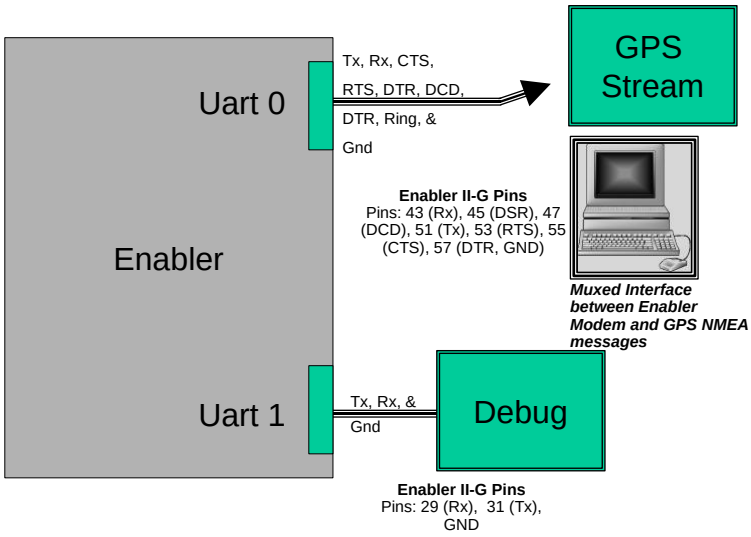

Figure 17 Enabler II-G A-GPS Module Serial Interface with Mux Serial Port and Debug

The tradeoff with this architecture is the complexity of the modem between serial data and the GPS information. The software complexity increases, but one gains the debug port to assist in the development process.

6.6.9.2 Single Serial Port with Debug port

The implementation of a single serial port would utilize a multiplexing architecture combining both GPS and network data over a single PPP connection. The other serial port would remain a debug port, as it exists today in the current module architecture. The integrator would have to write the supporting application/driver that would reside on the target modem to handle the muxing of the network data and the GPS data. An example diagram illustrating the architecture is shown below:

PRELIMINARY

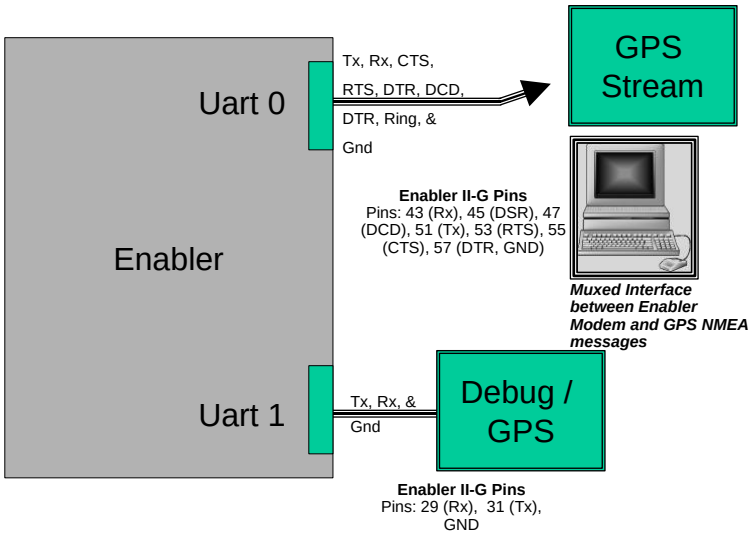

Figure 18 Enabler II-G A-GPS Module Serial Interface with Mux Serial Port and Debug

The tradeoff with this architecture is the complexity of the modem between serial data and the GPS information. The software complexity increases, but one gains the debug port to assist in the development process.

6.6.10 Analog-To-Digital Input

Eight general-purpose signals are provided. Each of these signals may be selected as inputs or outputs. They may be used independently as a user-specified function, or may be used to provide modem control and status signals. Several examples of modem control signals are: power shutdown command, register/deregister on network command, and transmitter disable. Several examples of modem status signals are: registration status and ready-for-power-down status to be used with power shutdown command signal.

I/O Lines	Parameter/Conditions	MIN	TYP	MAX	UNIT
V_{IL}	Input Voltage – Low	-0.5		0.9	Vdc
V_{IH}	Input Voltage – High	2.0		3.4	Vdc
V_{OL}	Output Voltage – Low			0.64	Vdc
V_{OH}	Output Voltage – High	2.4		3.0	Vdc
I_{IL} / I_{IH}	Input Leakage Current	-1		1	µA
I_{OL} / I_{OH}	Rated Output Current			2	mA

6.6.11 Analog-To-Digital Input

Analog-To-Digital Input	Parameter/Conditions	MIN	TYP	MAX	UNIT
ADC_{BRES}	ADC Binary Resolution		10		Bits
ADC_{REF}	ADC Reference Voltage		1.75		Vdc

PRELIMINARY

V_{ADC}	ADC Range	**0**	**1.75**	**Vdc**
Z_{ADC}	ADC Input Impedance	**100**		**kΩ**

PRELIMINARY

6.6.12 Digital-To-Analog Output

Digital-To-Analog Output	Parameter/Conditions	MIN	TYP	MAX	UNIT
DAC_{BRES}	DAC Binary Resolution		10		Bits
T_S	Settling Time		10		µS
V_{OMAX}	Output Voltage with Code Maximum	2.0	2.2	2.4	Vdc
V_{OMIN}	Output Voltage with Code Minimum	0.18	0.24	0.3	Vdc

6.6.13 Handset Microphone Input

Parameter	Conditions	MIN	TYP	MAX	UNIT
Maximum Input Range – Mic(+) to Mic(-)	Inputs 3 dBm0 (Max. digital sample amplitude when PGA gain set to 0 dB)		32.5		mVrms
Nominal Ref. Level – Mic(+) to Mic(-)			-10		dBm0
Differential Input Resistance – Mic(+) to Mic(-)			100		kΩ
Microphone Pre-Amplifier Gain			25.6		dB
Bias Voltage on Mic(+)	2.0 or 2.5 V	2.0		2.5	Vdc
Mic Bias Current Capability		0		0.5	mA

6.6.14 Handset Speaker Output

Parameter	Conditions	MIN	TYP	MAX	UNIT
Maximum Swing – Ear(+) to Ear(-)	R_L = 32 Ω & 5% distortion	1.2	1.5		V_{pp}
Maximum Capacitive Load – Ear(+) to Ear(-)				100	pF
Amplifier Gain			1		dB
Amplifier State in Power Down	High Z				

Enfora recommends an external audio amplifier for loads of less than 16 Ω or if volume is inadequate.

6.6.15 Headset Microphone Input

Parameter	Conditions	MIN	TYP	MAX	UNIT
Maximum Input Range – Mic(+) to Mic(-)	Inputs 3 dBm0 (Max. digital sample amplitude when PGA gain set to 0 dB)		32.5		mVrms
Nominal Ref. Level – Mic(+) to Mic(-)			-10		dBm0
Differential Input Resistance – Mic(+) to Mic(-)			100		kΩ
Microphone Pre-Amplifier Gain			25.6		dB
Bias Voltage on Mic(+)	2.0 or 2.5 V	2.0		2.5	Vdc
Mic Bias Current Capability		0		0.5	mA

6.6.16 Headset Speaker Output

PRELIMINARY

Parameter	Conditions	MIN	TYP	MAX	UNIT
Maximum Swing – HS Spkr (+) to (-)	R_L = 32 Ω & 5% distortion	**1.6**	**1.96**		**V_{pp}**
Maximum Capacitive Load – HS Spkr (+) to (-)				**100**	**pF**
Amplifier Gain		**-7**		**-5**	**dB**
Amplifier State in Power Down	High Z				

The headset speaker output is a single ended output. Enfora recommends an external audio amplifier for loads of less than 32 Ω or if volume is inadequate.

PRELIMINARY

6.6.17 Audio Design Note

Speaker and microphone PCB traces should be run in pairs and buried between two ground planes for best results. The following figure provides a sample circuit design for connection of Mic and Speaker pins.

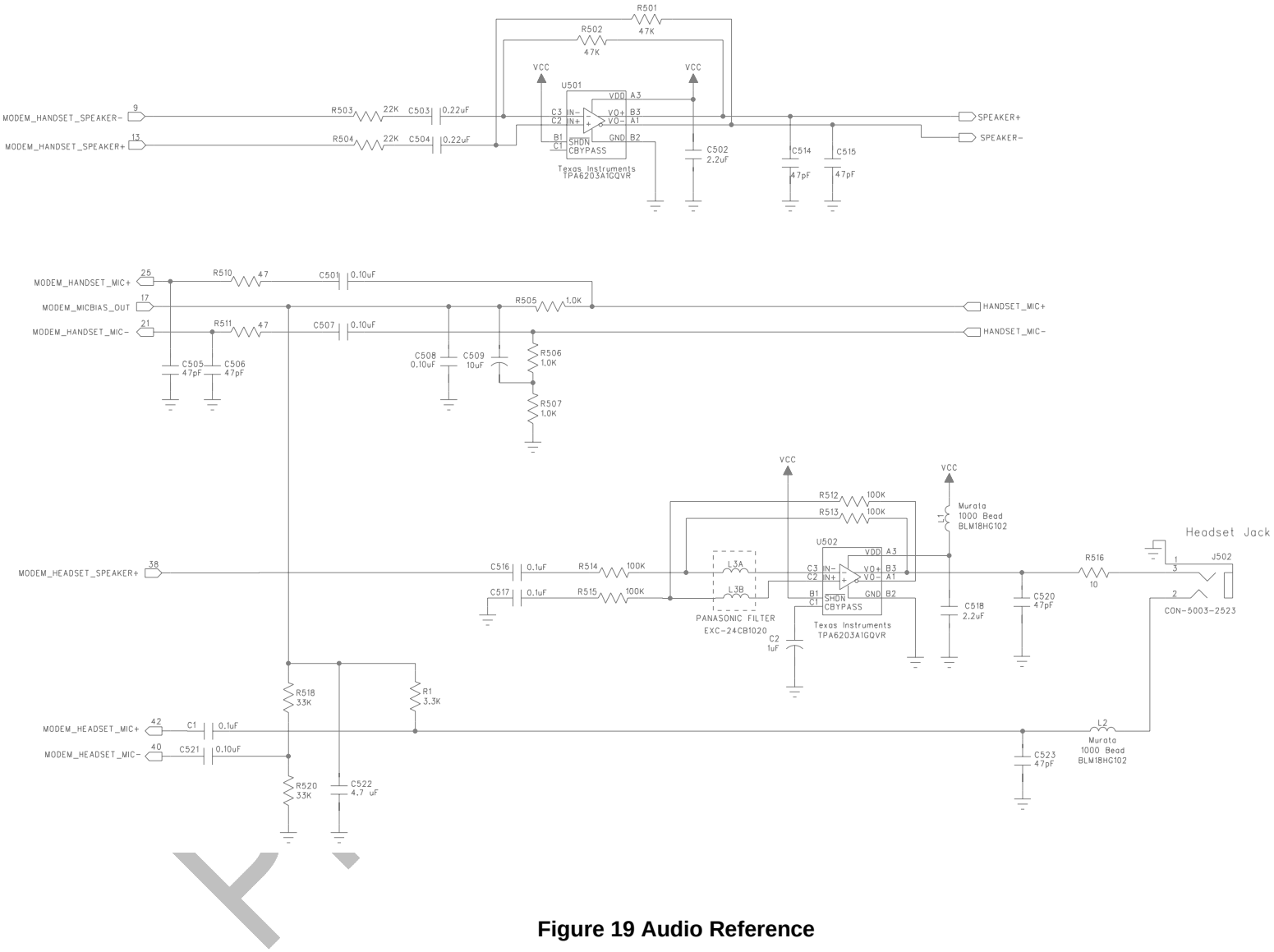

Figure 19 Audio Reference

(Please note that this schematic can be zoomed to read the detail)

6.7 Subscriber Identity Module (SIM) Carrier

The SIM, an integral part of any GSM terminal device, is a “smart card” that is programmed with subscriber information:

- The user information consists of an International Mobile Subscriber Identity (IMSI) number, which is registered with the GSM provider, and an encryption Ki (pronounced "key"). This information consists of a microprocessor and memory installed on a plastic card.

Note: The SIM is not provided with the Enfora Enabler II-G A-GPS module. The SIM must be obtained from the GSM service provider and must be provisioned by the operator for data and/or voice. Always take care to protect the SIM: the GSM terminal will not operate without the SIM installed.

The SIM provides the IMSI for authentication. To gain access to the GSM network, the network
must recognize the IMSI number, and the terminal must be able to properly decrypt the data sent by the network. The SIM also serves as a buffer for SMS messages, storing the message for transmission until a radio link is available and buffering received messages until retrieved.

6.7.1 SIM Integration for the Enfora Enabler II-G A-GPS Module

The Enabler II-G A-GPS module default configuration does not include an on-board SIM carrier. Enfora provides a separate product SKU for the Enabler II-G A-GPS module with the integrated SIM carrier.

6.7.2 Using a Remote SIM with the Enfora Enabler II-G A-GPS Module

The Enabler II-G A-GPS module default configuration does not include an on-board SIM carrier. If the module is going to be integrated using a remote SIM, the following guidelines are provided:

- To utilize a remote SIM, the integrator must provide a suitable SIM connector on the Application.
- The maximum distance from the Enabler II-G A-GPS module to the remote SIM connector must not exceed 25.4 cm (10 inches).

PRELIMINARY

Remote SIM Power	Parameter/Conditions	MIN	TYP	MAX	UNIT
V_{DD}	Remote SIM Supply Voltage 3 V Mode	2.7		3.3	Vdc
I_{DD}	Remote SIM Supply Current – 3V Modes			10	mA

Remote SIM Line	Description
SIM_VDD	Remote SIM power supply
SIM_RST	Remote SIM reset
SIM_CLK	Remote SIM clock
SIM_I/O	Remote SIM serial data interface

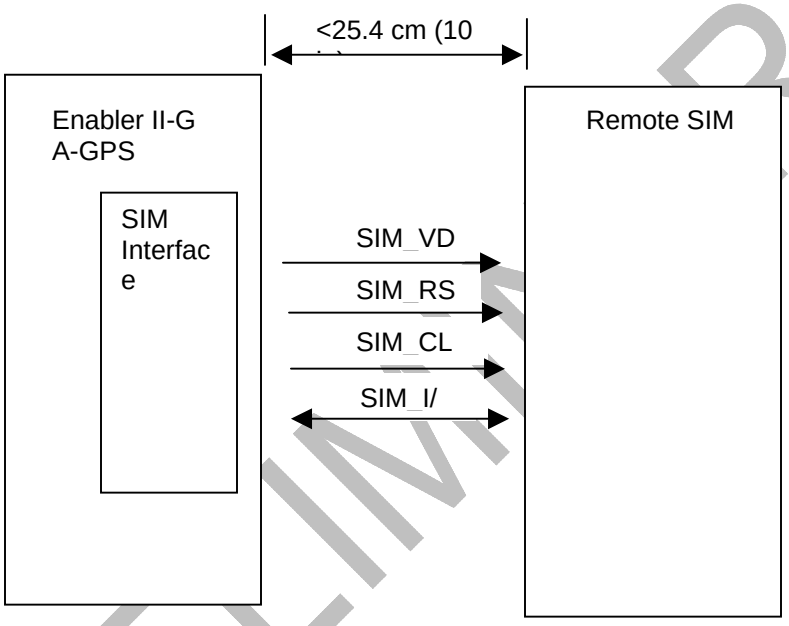

Figure 20 Remote SIM Interface

- ESD Protection
- 15 kV Air Discharge
- 8 kV Contact Discharge

6.7.2.1 Remote SIM Component Information

A SIM carrier compatible for use on the Enabler II-G A-GPS module is a JAE Plug-In SIM Card carrier with hinge; JAE part number SF7W006S1BE1000. JAE Plug-in SIM Card with hinge cover SF7 Series.

PRELIMINARY

7.0 GSM/GPRS Modes of Operation

GSM/GPRS supports many optional services and modes. The Enfora Enabler II-G A-GPS module supports the following GSM/GPRS services:

- Circuit-switched data
- Short-Message Services (SMS)
- Class B GPRS Functionality
- Voice communication

7.1 Enabling the Transmission Modes for the GSM/GPRS Services

Each of the GSM/GPRS services has two modes that can be enabled separately:

- Mobile-originated (MO): allows the making of a service request (such as, making a telephone call or sending an SMS)
- Mobile-terminated (MT): allows receiving a service request (such as receiving a telephone call or an SMS)

Note: Contact your local GSM operator to ensure that the services and modes have been provisioned for the SIM.

7.2 Voice Communication

The Enfora Enabler II-G A-GPS module has full voice capabilities, provided the necessary connections have been made for the speaker and microphone pins on the 60-pin I/O connector. The Enfora ***Enabler-G AT Command Set Reference - GSM0102PB001MAN*** has the entire list of commands that can be used to control the voice functionality. The quick start guide in this manual provides a basic command set that can be used to initialize and test the voice functionality.

The Enfora Enabler II-G A-GPS module supports three vocoder compression algorithms for voice communication: Full-Rate (FR), Enhanced Full-Rate (EFR), and Half-rate (HR).

7.3 Circuit-Switched Data

In this mode, the Enfora Enabler II-G A-GPS module supports both of the connection modes of transmission that are provided by GSM:

- Non-Transparent mode delivers a constantly low error rate but with a non-guaranteed throughput or delay. The Non-Transparent service provides a performance that is closest to using a modem over a fixed Public Switched Telephone Network (PSTN) line.

Note: All GSM service providers may not support Transparent mode. In those cases, the Enfora Enabler II-G A-GPS module can be configured to switch automatically to Non-Transparent mode. This capability depends on the settings in the AT+CBST command.

PRELIMINARY

7.4 SMS: Short Message Services

- Short Message Services (SMS) is a feature-rich GSM service. The Enfora Enabler II-G A-GPS module can perform the following tasks:
  - Sending and receiving binary messages of up to 160 characters (7-bit characters)
  - Sending and receiving text messages of up to 140 bytes (8-bit data)
  - Submitting a SMS Protocol Data Unit (PDU) to a SMSC (Short Message Service Center) and storing a copy of the PDU until either a report arrives from the network or a timer expires
  - Receiving a SMS PDU from a SMSC
  - Returning a delivery report to the network for a previously received message
  - Receiving a report from the network
  - Notifying the network when the module has sufficient memory capacity available to receive one or more SMS messages (after the module had previously rejected a message because its memory capacity was exceeded)

PRELIMINARY

8.0 GPS Modes of Operation

The Enabler II-G A-GPS module provides a number of GPS features that can be used in a number of different manners. The following modes of operation are supported in the module:

Autonomous, Mobile Assisted, and enhanced Autonomous

8.1 Autonomous

This mode of operation is when the GPS receiver operates in real-time. The receiver obtains the ephemeris data form the satellite constellation when it is able to attain a valid signal. Minimum signal strength is required in order for the receiver to accurately decode the ephemeris data. The data is transmitted via a serial port in NMEA sentences. The NMEA sentences give information like location, speed, course, and other location services depending on the NMEA sentence. This mode of operation is a mode supported as a standard within the industry. Below is an outline describing how autonomous mode works.

1. GPS receiver scans the sky for satellites in view of the GPS receiver. The amount of time for receiving data will vary depending upon view of the sky, time of last update, and other factors.

2. GPS data is received from a constellation of satellites in view of the module. The GPS is data is transmitted to the GPS receiver on the GPS chipset. The GPS chipset will then translate this information into NMEA sentence that can be streamed out of the serial port.

3. The GPS data is read out of the Enfora module by the terminal device as defined by the AT statement AT$GOPMD. The terminal device will respond to this GPS data in a predefined manner and perform certain functions on the platform device.

8.2 Mobile Assisted

This mode uses a remote server to process position information. The receiver will obtain various data points like doppler, position, etc…and send the information over a data link to a server. The server will use that data in conjunction with their current information to obtain data that is sent back to the receiver. This is a mode supported as a standard within the industry.

8.3 Enhanced Autonomous

Mobile-Based mode is implemented when limited data is present at the GPS receiver and data cannot be processed accurately. This condition can happen when the view of the sky is obstructed, high multi-path reflection (i.e. in a downtown area with lots of skyscrapers) or atmospheric conditions. The limited data is sent via a data connection to an A-GPS server. The A-GPS server takes this data and uses it in combination with accurate GPS data that is collected continuously. The limited data is updated with information that is more accurate. This information is then sent to the mobile device. The mobile device will be responsible for processing the location data in detail. It will also be responsible for presentation to an application and/or user.

PRELIMINARY

Using this data, the device can accurately detect its position faster. In this mode, the device can accurately detect its position in low signal strength areas such as buildings. This mode will speed up Time to first fix (TTFF). Figure 2 below describes the Mobile Based mode of operation in detail.

For additional information and details on the different modes of operation, see *GSM????PB001MAN - Enfora Integrated GPS Module Overview.*

PRELIMINARY

9.0 SIM Operation

9.1 Provisioning the SIM

The SIM can support optional features or services. Most operators typically configure the SIM to send/receive voice calls and to receive SMS; however, some may require an additional tariff to enable the SIM to send SMS. The transmission of circuit switched and GPRS data are also additional services that may be required to allow the service:

- Mobile-originated (MO): allows making a service request (such as, making a call or sending an SMS)
- Mobile-terminated (MT): allows receiving a service request (such as, receiving a phone call or an SMS)

It is imperative for the Enfora Enabler II-G A-GPS module that the SIM be configured for the optional services that are required for the application.

9.2 GSM Services Supported by the Enfora Enabler II-G A-GPS Module

The Enfora Enabler II-G A-GPS module supports four GSM services (modes of operation) that must be enabled by the operator:

- Voice calls (MO and MT): requires a telephone number
- SMS (MO and MT): uses the telephone number for Voice
- Circuit-switched data calls (MO and MT): requires a telephone number
- The GSM SIM can have multiple telephone numbers.

9.3 GPRS Services Supported by the Enfora Enabler II-G A-GPS Module

The Enfora Enabler II-G A-GPS module supports the following GPRS (modes of operation) that must be enabled by the operator:

- GPRS Packet Connectivity (MO and MT) with Both Dynamic and Static IP option
- GPRS SMS (MO and MT): uses the IP (Dynamic or Static) set by the operator
- Multiple APN Setting
- Quality of Service Options
- Multi-slot 10 Class of Service

9.4 Selecting the GSM Modes of Operation

When provisioning the SIM for the Enfora Enabler II-G A-GPS module, enable the following modes of operation:

- Voice calls: configure the SIM for both MO and MT service (to send and receive)

PRELIMINARY

- SMS: configure the SIM either for MT alone (to receive) or for both MO and MT (to send and receive)

- Circuit Switched Data: configure the SIM either for MO alone (to send) or for both MO and MT (to send and receive)

Voice	SMS	CS Data	GPRS	Function
MO/MT	MT	MO		Voice calls, receive SMS, make data calls
MO/MT	MO/MT	MO		Voice calls, receive / send SMS, make data calls
MO/MT	MO/MT	MO/MT		Voice calls, receive / send SMS, make / receive data calls (requires an additional data telephone number)

10.0 Software Interface

10.1 Software Interface

The application sends commands to the Enfora Enabler II-G A-GPS module via the 60-pin I/O signal connector. These commands use the Enfora AT Command Set and/or Enfora's Packet API.

The Enfora Enabler II-G A-GPS module operates in one of the following modes:

- Command mode: Used for configuring the Enfora Enabler II-G A-GPS module, for interrogating the GSM network, and for placing and receiving calls. It uses the AT command set via the serial port for communication.

- On-line mode: Used after a circuit-switched data call has been established. Data is passed between the Enfora Enabler II-G A-GPS module and the controlling application without command interpretation. The only AT command that is interpreted in On-line mode is the +++ command. (This command places the Enfora Enabler II-G A-GPS module in Command mode but does not terminate the circuit-switched data call.)

- IP Packet /API Mode: Used to read/write modem parameters, interrogate network information, and place and receive calls in real-time, multi-tasking mode. The Packet API mode is facilitated over a PPP connection and the packets can be constructed according to the information provided in the *Enfora GSM-GPRS Family UDP-API Reference GSM0102PB002MAN*. *Enfora GSM-GPRS Family Modem Control Library Reference GSM0000PB006MAN* provides detail of the UDP Modem Control Library that has three levels: port , messaging, and modem libraries. Each of the three levels contains one or more libraries. For example, the port libraries layer has UDP PPP Port, UDP Socket Port, and COM Port libraries. All libraries are provided as a part of the Enfora Enabler II-G Assisted GPS Module Integration Toolkit.

- GPS only mode: Used for configuring the Enfora Enabler II-G A-GPS module, for interrogating the GPS satellite network and sending NMEA data. It uses the AT command set via the serial port for communication.

The AT command driver of the Enfora Enabler II-G A-GPS module never exits the Command state, that is, it never enters the On-line mode. Although the host interface may not be able to access the AT command interpreter, it is always running and is available via the API Mode over a PPP connection and/or via the RF interface.

PRELIMINARY

- In the Command state, characters that are received from the Customer Premise Equipment (CPE) are treated as AT commands by the Enfora Enabler II-G A-GPS module.
- In response to the commands received from the CPE, the Enfora Enabler II-G A-GPS module sends characters (AT commands) to the CPE.
- Various events can also trigger the Enfora Enabler II-G A-GPS module to send characters (AT commands) to the CPE.

10.2 Format for the AT Commands

The general format of the command line is: **<prefix> <command> <CR>**

<prefix>	AT
<command>	See AT Command Manual
<CR>	0X0D

The prefix AT obtains synchronization, identifies the character parameters, and indicates that a command may be in the following characters.

AT commands are not case sensitive: use either capital letters or lower-case letters for the AT command.

> **Note:** Some AT Command parameter values ***ARE*** case sensitive and are documented in the Enfora ***Enabler-G AT Command Set Reference - GSM0102PB001MAN***.

PRELIMINARY

10.3 Enfora AT Command Set

For a full description of the AT commands, refer to the Enfora ***Enabler-G AT Command Set Reference - GSM0102PB001MAN***.

Note: A command description that includes an *asterisk denotes that the GSM service provider must enable supplementary services functionality before the command is available.

10.4 Enfora Packet Application Programming Interface

10.4.1 UDP-API Architecture

The following information provides an overview of the Enfora UDP-based API architecture. Full details are provided in the *Enfora GSM-GPRS Family UDP-API Reference GSM0102PB002MAN*.

Figure 21 provides the general structure for the UDP-API.

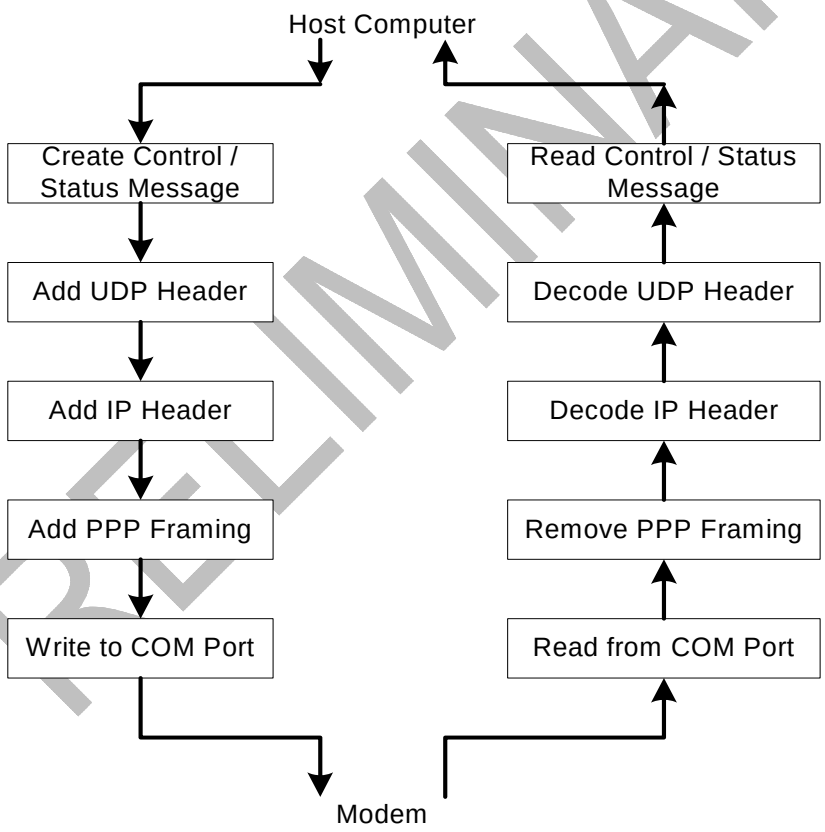

Figure 21 UDP-API Structure

PRELIMINARY

The following provides information related to the general construction of the UDP-API packet. Other command structures are available and can be found in the API reference manual.

All AT commands listed in the *GSM0102PB001MAN* document are supported via this method. To send an AT command via DUN or OTA, the user has to follow the following message structure. This message structure sends the ATI command to the modem and receives Enfora L.P. response from the modem.

Bytes	Data Description	Comments
0 – 19	IP Header	
20 – 27	UDP Header	
28	0x00	Sequence Number
29	0x01	
30	0x04	AT Command Read/Write
31	0x00	Reserved
32	0x41	AT Command (ATI)
33	0x54	
34	0x49	

Following data will be returned by the modem:

Bytes	Data Description	Comments
0 – 19	IP Header	
20 – 27	UDP Header	
28	0x00	Sequence Number
29	0x01	
30	0x05	AT Command Response
31	0x00	Reserved
32	0x0D	AT Command Response (Enfora L.P.)
33	0x0A	
34	0x45	
35	0x6E	
36	0x66	
37	0x6F	
38	0x72	
39	0x61	
40	0x2C	
41	0x20	
42	0x49	
43	0x6E	
44	0x63	
45	0x2E	
46	0x0D	
47	0x0A	

PRELIMINARY

10.5 Enfora Modem Control Library Architecture

The following information provides an overview of the Enfora Modem Control Library architecture. Full details are provided in the *Enfora GSM-GPRS Family Modem Control Library Reference GSM0000PB006MAN.*

Figure 22 provides the general embedded architecture for the Enabler II-G A-GPS modem. There are various levels of access provided to allow complete application design flexibility. ***SLIP access is not currently available.***

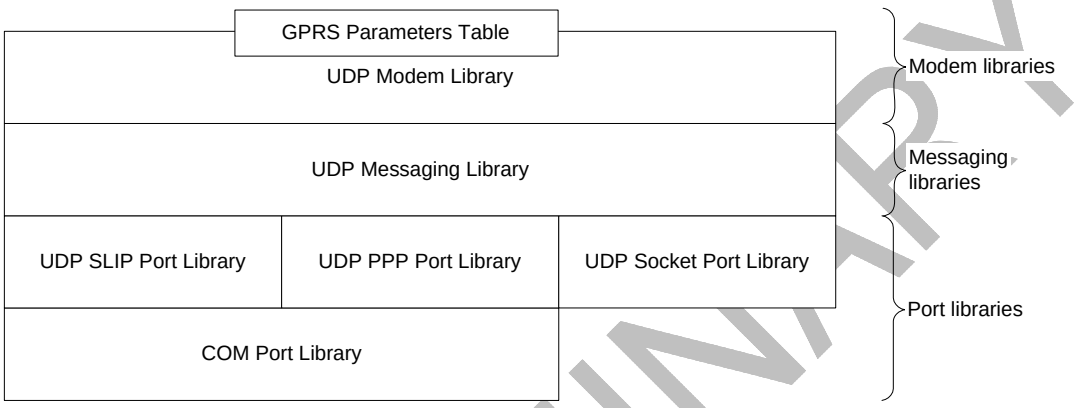

Figure 22 Library Layout

The table below can be used to help decide which library configuration is the best for a project. ***SLIP access is not currently available.***

	UDP SLIP Port Library	UDP PPP Port Library	UDP Socket Port Library	UDP Messaging Library with	UDP Messaging Library with	UDP Messaging Library with	UDP Modem Library with	UDP Modem Library with	UDP Modem Library with
Benefits									
Allows dynamic IP assignment		●	●		●	●		●	●
Allows multiple application to access the modem			●			●			●
Allow AT Commands	●	●		●	●		●	●	
Allows modem control message	●	●	●	●	●	●	●	●	●
Provide modem control message formatting				●	●	●	●	●	●
Provides modem parameters database service							●	●	●
Suitable for microcontroller programming	●	●	●	●	●	●			
Requirements									

PRELIMINARY

Requires TCP/IP stack			●			●			●
Memory usage	Low	Low	Low	Low	Low	Low	High	High	High

Table 3 - Modem Library Configurations

10.5.1 Using Port Library

Figure 23 provides the architecture for Port Library access.

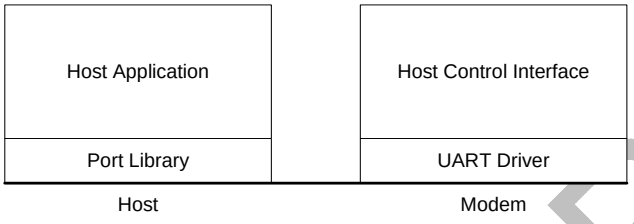

Figure 23 Using Port Library

Port Libraries provide the most basic modem access services. It converts modem control messages to either UDP SLIP or UDP PPP, and vice versa. ***SLIP access is not currently available.***

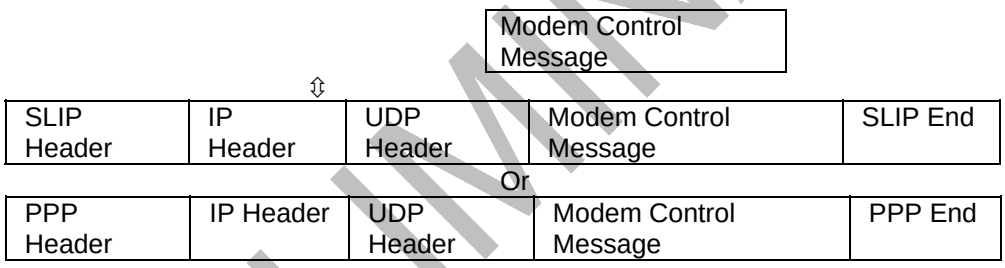

10.5.2 Using Messaging Library

Figure 24 provides the architecture for Messaging Library access.

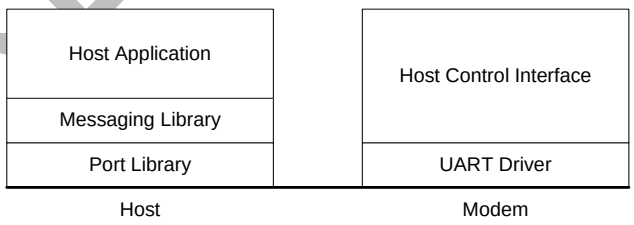

Figure 24 Using Messaging Library

PRELIMINARY

Messaging Library provides some important modem access services. It builds a modem control message and converts the message to either UDP SLIP or UDP PPP before sending the data to the modem. It also parses the modem control messages from the modem. ***SLIP access is not currently available.***

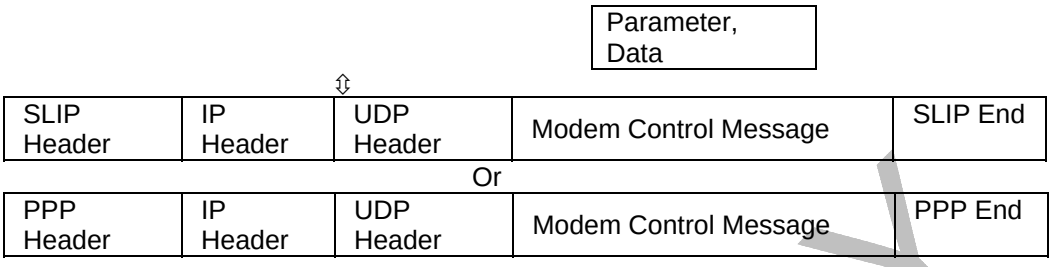

PRELIMINARY

10.5.3 Using Modem Library

Figure 25 provides the architecture for Modem Library access.

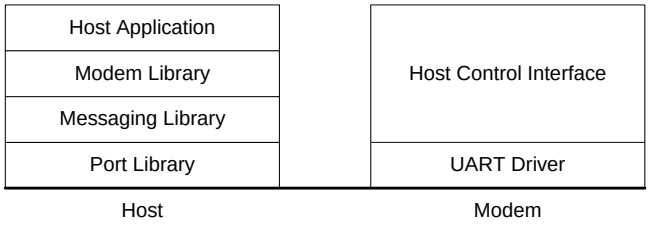

Figure 25 Using Modem Library

Modem Library provides the most complete modem access services. In addition to the features already provided by the Messaging Library, the modem library maintains a modem parameter database. In order to maintain the parameter database, the modem library requires more memory than the other libraries. This makes the library unsuitable for some of the micro controller programming. However, it is a good library to use by applications in a personal computer or a PDA. It allows the programmer to develop host applications for the modem quickly.

11.0 Setup and Initialization

11.1 General Setup

The GPRS modem is controlled through the Modem RS232 port on the development board. Connect a nine pin straight through serial cable from the Modem RS232 connector to the serial port on the controlling computer.

Hook up power supply, connect antenna, and install SIM into modem.

11.1.1 HyperTerminal Configuration for Enabler II-G A-GPS module

The following provides an example for setting up a Windows HyperTerminal session that can be used to experiment with various configurations on the Enabler II-G A-GPS module for controlling computer:

PRELIMINARY

1. Select the connection interface, Direct to Com 1 (or whatever port is the serial port).

Figure 26 HyperTerminal Definition

PRELIMINARY

2. Configure the COM port as displayed below.

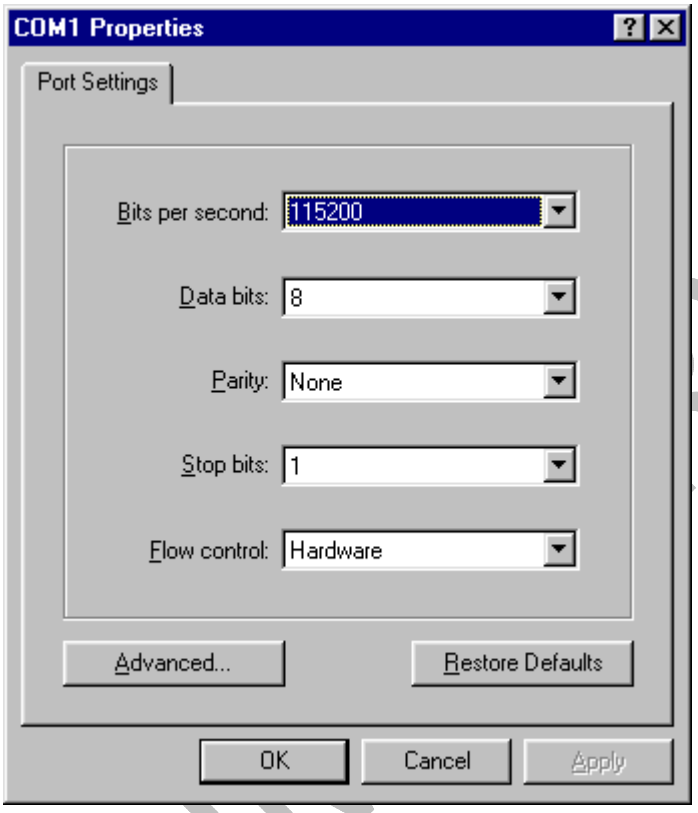

Figure 27 COM Port Settings

11.1.2 Initialization (AT Command Interface)

In the GSM vocabulary, a call from GSM mobile to the PSTN is called a "mobile-originated call" or "outgoing call". A call from the fixed network to a GSM mobile is called a "mobile-terminated call" or "incoming call."

In the following examples, “Entry” refers to the application. The following convention describes the direction of the data exchange:

- The data exchange from the customer application to the Enfora Enabler II-G A-GPS module is designated as:

  Entry

- The data exchange from the Enfora Enabler II-G A-GPS module to the customer application is designated as:

  Response

  Note: With the exception of the +++ command (Online Escape Sequence), all commands must be preceded by the AT attention code (or command prefix) and terminated by pressing the <CR> character.

In the following examples, the <CR> and <CR><LF> are intentionally omitted for clarity and space.

11.1.3 Initial Response to the AT Command

After power is applied to the Enfora Enabler II-G A-GPS module, the module performs a power-up self-test. The self-test completes within one (1) second. When queried with the AT command, the Enfora Enabler II-G A-GPS module responds with one of the following result codes:

- OK signifies that the Enfora Enabler II-G A-GPS module is ready, that it correctly interprets the AT command, and that it has executed the command.
- ERROR signifies that the Enfora Enabler II-G A-GPS module does not understand the command or that the command is invalid.

Entry	AT	
Response	OK	Command valid: module is ready

The Enfora Enabler II-G A-GPS module must be in AT Command mode (please refer to section 11.3 GPRS Packet Examples for packet mode initialization and setup) when any command is entered (with the exception of the online escape sequence). Commands entered when the module is in On-line mode are treated as data, and are transmitted as such to the receiving module. i.e. If the module is in PPP or SLIP mode, AT commands cannot be entered.

11.1.4 Sending an Initialization String to the Enfora Enabler II-G A-GPS Module

The following example provides the sample AT commands and responses for the following initialization tasks:

- Reset the module to the factory defaults
- Disable character echo
- Transmit Result Codes
- Set the module to Verbose mode (to display result codes as words)
- Set the DCD to match the state of remote modem
- Ignore the DTR

Entry	AT&FE0Q0V1&C1&d0	Initialization string
Response	OK	Command is valid
Entry	ATSO=1	Auto answer on 1st ring
Response	OK	Command is valid

PRELIMINARY

11.1.5 Setting Up the Communication Mode for the Enfora Enabler II-G A-GPS Module

The following example sequence provides the AT command and response for setting the Enfora Enabler II-G A-GPS module for full phone functionality, automated operator selection, 9600 baud, non-transparent mode.

Entry	AT+CFUN=1	FULL phone functionality
Response	OK	Command is valid
Entry	AT+COPS=0	Automatic operator selection
Response	OK	Command is valid
Entry	AT+CBST=7,0,1	9600 baud, non-transparent mode
Response	OK	Command is valid

PRELIMINARY

11.1.6 Querying the Status of the Enfora Enabler II-G A-GPS Module

This topic is addressed in the Enfora Application Note ***GSM0000AN006 – Enabler-G Module Status Query***.

11.1.7 Setting Module Reporting Parameters for GSM and GPRS

This topic is addressed in the Enfora Application Note ***GSM0000AN007 - Enabler-G Status Reporting***.

11.2 GSM/SMS Examples

11.2.1 Initialize the Enfora Enabler II-G A-GPS Module to Send and Receive SMS Text Messages

This topic is addressed in the Enfora Application Note ***GSM0000AN004 - Enabler-G SMS Configuration and Use***.

11.2.2 Managing SMS Messages

This topic is addressed in the Enfora Application Note ***GSM0000AN004 - Enabler-G SMS Configuration and Use***.

11.2.3 Data Call Configuration

This topic is addressed in the Enfora Application Note ***GSM0000AN003 - Enabler-G Data Circuit Switched Call Configuration and Use***.

11.2.4 Voice Call Configuration

This topic is addressed in the Enfora Application Note ***GSM0000AN003 - Enabler-G Data Circuit Switched Call Configuration and Use***.

11.3 GPRS Packet Examples

11.3.1 GPRS ATTACH and ACTIVATE

This topic is addressed in the Enfora Application Note ***GSM0000AN005 - Enabler-G Automated Network Connection Configuration and Use***.

11.3.2 Windows PPP Setup

The Enabler II-G A-GPS module can be used in a Windows operating system environment as a standard serial modem device. The required setup and configuration process is contained in Enfora Application Notes ***GSM0000AN001 - Enabler-G PPP Configuration for Windows 98*** and ***GSM0000AN002 - Enabler-G PPP Configuration for Windows 2000***.

11.4 GPS Examples

11.4.1 Autonomous Mode

This topic is addressed in the Enfora Application Note ***GSM????AN??? - Enabler-G Automated Network Connection Configuration and Use***.

PRELIMINARY

11.4.2 Mobile Based Mode

This topic is addressed in the Enfora Application Note ***GSM????AN??? - Enabler-G Automated Network Connection Configuration and Use***.

11.4.3 Enhanced Autonomous Mode

This topic is addressed in the Enfora Application Note ***GSM????AN??? - Enabler-G Automated Network Connection Configuration and Use***.

PRELIMINARY

12.0 Integration and Testing

The Enfora Enabler II-G A-GPS module has been designed to minimize the amount of time required for integration and testing the application. By being fully certified by the appropriate bodies, the Enfora Enabler II-G A-GPS module provides seamless integration into the GSM network.

The integration issues for the application can be narrowed to the utilization of the AT commands and the use of the GSM functionality. Coverage and signal quality may be evaluated by using the RSSI commands. Additional network information can be determined by using AT commands.

Integration of the GPRS Packet capabilities is more complicated than using AT command sequences to initiate the connection and begin transferring data. The following Application Notes should be used to integrate the GPRS packet capabilities:

GSM0000AN001 - Enabler-G PPP Configuration for Windows 98

GSM0000AN002 - Enabler-G PPP Configuration for Windows 2000

GSM0000AN008 - Enabler-G PPP Configuration for Windows XP

GSM0000AN010 - Enabler-G PPP Configuration for PocketPC 2002

GSM0000AN005 - Enabler-G Automated Network Connection Configuration and Use

12.1 Integrating the Enfora Enabler II-G A-GPS Module

Note: Generally, all interfaces that are externally available to the end user need to be ESD-conditioned and terminated in some way. Many of these interfaces should not be connected with power applied.

At the highest level, this is done using some type of GSM test equipment (such as, Racal 6103E), a computer, and a serial interface tester. The GSM test equipment must be able to simulate a GSM call and measure the key parameters related to the module.

Additionally, the serial interfaces and some minimal SIM functionality can be verified by sending AT commands to the Enfora Enabler II-G A-GPS module.

All of these conditions need to be verified at ambient as well as extreme conditions.

PRELIMINARY

As part of integration, each of the following interfaces must be verified:

Information	Recommendations
SIM	The maximum line length of the SIM interface is 25.4 cm (10 inches). The Enfora Enabler II-G A-GPS module takes care of the signal conditioning As a minimum, an external application with a remote SIM will require a standard SIM carrier. Filter the SIM VCC signal with a 10 uf / 10 V capacitor to help with the line length.
Primary and secondary serial Interfaces	The Enfora Enabler II-G A-GPS module uses a 3 V digital interface. The RS-232 signals must be level-shifted to get standard levels. These signals must be ESD-protected.
Reset Interface	Resets the Enfora Enabler II-G A-GPS module when tied low.
Audio/Microphone Interface	Preliminary balancing on Enfora Enabler II-G A-GPS module. Maximum length TBD

PRELIMINA

Testing the following parameters verifies the RF parameters that may be affected by such things as RF path loss, power supply noise, and external interference.

Functionality	Parameters to be Tested
Transmitter	Frequency Error Phase Error PA Ramp Modulation Spectrum RF Power Steps Timing Advance
Receiver	BER Based RX Tests (RXQUAL RXLEV) BER Based Sensitivity

Testing the following GSM functionality verifies proper network communication.

Functionality	Parameters to be Tested
Transmitter	Frequency Error Phase Error PA Ramp Modulation Spectrum RF Power Steps Timing Advance
Receiver	BER Based RX Tests (RXQUAL RXLEV) BER Based Sensitivity

Testing the following GSM functionality verifies proper network communication.

Functionality	Parameters to be Tested
Network Function	Synchronization and registration Call set-up and call termination (both MT and MO calls) SMS and/or data calls

PRELIMINARY

13.0 APPENDIX A - Warranty Repair and Return Policy

ENFORA L.P. 12-MONTH LIMITED WARRANTY

Enfora warrants to the original purchaser of the product that, for a period of one (1) year from the date of product purchase, the product hardware, when used in conjunction with any associated software (including any firmware and applications) supplied by Enfora, will be free from defects in material or workmanship under normal operation. Enfora further warrants to such original purchaser that, for a period of ninety (90) days from the date of product purchase, any software associated with the product will perform substantially in accordance with the user documentation provided by Enfora, and any software media provided with the product will be free from defects in material or workmanship under normal operation. Enfora does not warrant that the product hardware or any associated software will meet the purchaser's requirements or that the operation of the product hardware or software will be uninterrupted or error-free. This limited warranty is only for the benefit of the original purchaser and is not transferable.

During the warranty period applicable to the product hardware, Enfora, at its expense and in its sole discretion, will repair or replace the product if it is determined to have a covered hardware defect, provided that the purchaser first notifies Enfora of any such defect, furnishes Enfora with a proof of purchase, requests and obtains a return merchandize authorization (RMA) number from Enfora, and returns the product, shipping charges prepaid, to Enfora under that RMA. If, upon reasonable examination of the returned product, Enfora does not substantiate the defect claimed by purchaser, or determines that the defect is not covered under this limited warranty, Enfora will not be required to repair or replace the product, but may instead reship the product to the purchaser, in which case purchaser shall be responsible for paying Enfora's usual charges for unpacking, testing, and repacking the product for reshipment to purchaser. Purchaser shall bear the risk of loss or damage in transit to any product returned by purchaser to Enfora, or any returned product not found to be defective or covered under this warranty and reshipped by Enfora to purchaser. In the event Enfora repairs or replaces a defective product, the repaired or replacement product will be warranted for the remainder of the original warranty period on the defective product. If Enfora is unable to repair or replace a defective product, the purchaser's exclusive remedy shall be a refund of the original purchase price. Any returned and replaced product, or any product for which Enfora has refunded the original purchase price, becomes the property of Enfora.

During the warranty period applicable to the software or its media, Enfora, at its expense, will replace any defective software or media if purchaser gives written notification of the defect to the technical support department at Enfora during the applicable warranty period. Enfora shall not have any obligation to provide any software bug fixes, upgrades or new releases except as necessary to correct any covered defect of which purchaser notifies Enfora during the applicable warranty period.

Enfora shall have no obligation under this limited warranty for (a) normal wear and tear, (b) the cost of procurement of substitute products or (c) any defect that is (i) discovered by purchaser during the warranty period but purchaser does not notify or request an RMA number from Enfora, as required above, until after the end of the warranty period,

PRELIMINARY

(ii) caused by any accident, misuse, abuse, improper installation, handling or testing, or unauthorized repair or modification of the product, (iii) caused by use of any software other than any software supplied by Enfora, or by use of the product other than in accordance with its documentation or (iv) the result of electrostatic discharge, electrical surge, fire, flood or similar causes.

ENFORA'S SOLE RESPONSIBILITY AND PURCHASER'S SOLE REMEDY UNDER THIS LIMITED WARRANTY SHALL BE TO REPAIR OR REPLACE THE PRODUCT HARDWARE, SOFTWARE OR SOFTWARE MEDIA (OR IF REPAIR OR REPLACEMENT IS NOT POSSIBLE, OBTAIN A REFUND OF THE PURCHASE PRICE) AS PROVIDED ABOVE. ENFORA EXPRESSLY DISCLAIMS ALL OTHER WARRANTIES OF ANY KIND, EXPRESS OR IMPLIED, INCLUDING WITHOUT LIMITATION ANY IMPLIED WARRANTIES OF NON-INFRINGEMENT, MERCHANTABILITY, SATISFACTORY PERFORMANCE AND FITNESS FOR A PARTICULAR PURPOSE. IN NO EVENT SHALL ENFORA BE LIABLE FOR ANY INDIRECT, SPECIAL, EXEMPLARY, INCIDENTAL OR CONSEQUENTIAL DAMAGES (INCLUDING WITHOUT LIMITATION LOSS OR INTERRUPTION OF USE, DATA, REVENUES OR PROFITS) RESULTING FROM A BREACH OF THIS WARRANTY OR BASED ON ANY OTHER LEGAL THEORY, EVEN IF ENFORA HAS BEEN ADVISED OF THE POSSIBILITY OR LIKELIHOOD OF SUCH DAMAGES.

Some jurisdictions may require a longer warranty period than specified above and, accordingly, for products sold in those jurisdictions the applicable warranty period shall be extended as required under the law of those jurisdictions. Furthermore, some jurisdictions may not allow the disclaimer of implied warranties or the exclusion or limitation of incidental or consequential damages, so the above disclaimer, limitation or exclusion may not apply to products sold in those jurisdictions. This limited warranty gives the purchaser specific legal rights and the purchaser may have other legal rights that vary from jurisdiction to jurisdiction.

In some instances, certain aspects of the product warranty may also be covered in a separate written agreement between Enfora and the distributor or reseller, if any, from whom purchaser purchased the product. That agreement may provide, for example, a longer warranty period or a different product return procedure that may also be available to purchaser (e.g., the product may be returned to Enfora through the distributor or reseller).

This limited warranty shall be governed by the laws of the State of Texas, United States of America, without regard to conflict of laws principles. This limited warranty shall not be governed in any respect by the United Nations Convention on Contracts for the International Sale of Goods.

PRELIMINARY

14.0 APPENDIX B - Regulations and Compliance

This section summarizes the responsibilities and actions required of manufacturers and integrators who incorporate OEM versions of the Enfora Enabler II-G AGPSA-GPS module into their products. In certain situations and applications, these products will require additional FCC, CE, GCF, PTCRB or other regulatory approvals prior to sale or operation. Appropriate instructions, documentation and labels are required for all products. For more information concerning regulatory requirements, please contact Enfora.

14.1 GCF Approval (Formerly FTA)

The Enfora Enabler II-G A-GPS module is type approved in accordance with the requirements of and through the procedures set forth by the GSM industry association. The relevant conformance specification is GSM 11.10-1 for GSM 850, 900, and 1800 MHz devices. For PCS 1900 MHz devices, the relevant standard is PCS 11.10, a version of GSM 11.10-1 that has been modified as appropriate for the North American GSM market. For applications that use an unmodified version of the Enfora Enabler II-G A-GPS module, further testing in this area may not be required. Any OEM changes in the SIM interface, antenna port, software or the physical makeup of the unit may require an incremental FTA to ensure continued compliance with the above-mentioned standards. For more information concerning type approval, please contact Enfora.

14.2 Electromagnetic Compatibility (EMC) and Safety Requirements

The Enfora Enabler II-G A-GPS module has been tested and approved for application in the United States of America (US) and the European Union (EU). The compliance details for each of these markets follow. For other markets, additional or alternative regulatory approvals may be required. Always ensure that all rules and regulations are complied with in every country that the OEM application is to be operated. Regardless of the country or market, the OEM must comply with all applicable regulatory requirements.

14.3 EMC/Safety Requirements for the USA

Compliance to the US rules and regulations falls under two categories:

- Radio approvals: Federal Communications Commission (FCC)
- Transmitter: FCC Rules, Part 24
- Unintentional emission: FCC Rules, Part 15
- Product safety approvals: NRTL by an OSHA-approved Nationally Recognized Testing Laboratory (NRTL)

Although the Enfora Enabler II-G A-GPS module has been authorized by the FCC and listed as a component by an NRTL, products and applications that incorporate the Enfora Enabler II-G A-GPS module will require final verification of EM emission and product safety approval.

Note: Particular attention should be made to the following statements regarding RF Exposure:

PRELIMINARY

14.4 Human Exposure Compliance Statement

MGL0208-xx Quad-Band A-GPS Module

Enfora certifies that the Enfora Enabler II-G A-GPS 850/900/1800/1900 MHz GSM Radio Module (FCC ID: MIVMLG0208) complies with the RF hazard requirements applicable to broadband PCS equipment operating under the authority of 47 CFR Part 24 (and Part 22 for GSM 850), Subpart E of the FCC Rules and Regulations. This certification is contingent upon installation, operation and use of the Enfora Enabler II-G A-GPS module and its host product in accordance with all instructions provided to both the OEM and end used. When installed and operated in a manner consistent with the instructions provided, the Enfora Enabler II-G A-GPS module meets the maximum permissible exposure (MPE) limits for general population / uncontrolled exposure at defined in Section 1.1310 of the FCC Rules and Regulations.

Note: Installation and operation of this equipment **must** comply with all applicable FCC Rules and Regulations, including those that implement the National Environmental Policy Act of 1969 (Part 1, Subpart I), with specific regard to antenna sitting and human exposure to radio frequency radiation. For further guidance, consult the FCC Rules, your service provider, or Enfora.

14.5 Compliance with FCC Regulations

The Federal Communications Commission (FCC) is the agency of the Federal Government that oversees all non-governmental radio frequency transmitters that operate within the United States. Unintentional emissions from digital devices are regulated by Part 15 of the FCC Rules and Regulations, which distinguishes between the environments in which these devices may operate. Intentional radiators operating as a PCS-1900 radio transmitter are regulated under Part 24, Subpart E—Broadband PCS of the FCC Rules and Regulations.

PRELIMINARY

14.6 Unintentional Radiators, Part 15

Equipment designated as Class A is intended for use in a commercial, industrial or business environment. The Enfora Enabler II-G A-GPS module has been tested and found to comply with the limits for a Class A digital device and can be integrated into equipment or applications intended for use in commercial, industrial or business environments.

The following statement must be included in the user manual for such products:

This equipment has been tested and found to comply with the limits for a Class A digital device, pursuant to part 15 of the FCC rules. These limits are designed to provide reasonable protection against harmful interference when the equipment is operated in a commercial environment. This equipment generates, uses, and can radiate radio frequency energy and, if not installed and used in accordance with the instruction manual, may cause harmful interference to radio communications. Operation of this equipment in a residential area is likely to cause harmful interference in which case the user will be required to correct the interference at his own expense.

Equipment intended for use in a residential environment (not-withstanding use in commercial, industrial or business environments) is designated as Class B. The Enfora Enabler II-G A-GPS module has been tested and found to comply with the limits for a Class B digital device and can be integrated into equipment or applications intended for use in residential environments.

The following statement must be included in the user manual for such products:

This equipment has been tested and found to comply with the limits for a Class B digital device, pursuant to part 15 of the FCC rules. These limits are designed to provide reasonable protection against harmful interference in a residential installation. This equipment generates, uses, and can radiate radio frequency energy and, if not installed and used in accordance with the instructions, may cause harmful interference to radio communications. However, there is no guarantee that interference will not occur in a particular installation. If this equipment does cause harmful interference to radio or television reception, which can be determined by turning the equipment off and on the user is encouraged to try to correct the interference by one or more of the following measures:

- Reorient or relocate the receiving antenna.
- Increase the separation between the equipment and receiver.
- Connect the equipment into an outlet on a circuit different from that to which the receiver is connected.
- Consult the dealer or an experienced radio/TV technician for help.

14.7 Intentional Radiators, Part 24

Products incorporating the Enfora Enabler II-G A-GPS transceiver operate as Personal Communications Services(PCS) devices under the authority of Part 24, Subpart E—Broadband PCS, of the FCC Rules and Regulations. All such transmitters must be authorized by the FCC through its Certification process, as detailed in Part 2, Subpart J - Equipment Authorization Procedures. Through the Certification process, the FCC verifies that the product complies with all applicable regulatory and technical requirements, including those that address human exposure to radio frequency radiation. In general, radio frequency transmitters cannot be sold or operated in the US prior to FCC approval.

PRELIMINARY

14.8 Instructions to the Original Equipment Manufacturer (OEM)

To comply with the requirements of the National Environmental Policy Act (NEPA) of 1969, operation of an FCC-regulated transmitter may not result in human exposure to radio frequency radiation in excess of the applicable health and safety guidelines established by the FCC. Further information on RF exposure issues may be found in the FCC's Office of Engineering and Technology (OET) Bulletin Number 65, "Evaluating Compliance with FCC Guidelines for Human Exposure to Radio Frequency Electromagnetic Fields" and Supplement C, "Additional Information for Evaluating Compliance of Mobile and Portable devices with FCC Limits for Human Exposure to Radio Frequency Emissions." Both of these documents are available via the Internet at the OET web site: **http://www.fcc.gov/oet**

The Enfora Enabler II-G A-GPS products are GSM radio transceivers, which operate under the authority of 47 CFR Part 24, Subpart E of the FCC Rules and Regulations. When installed and operated in accordance with the instructions provided in this manual, these devices comply with current FCC regulations regarding human exposure to radio frequency radiation.

The following installation and operation restrictions apply to all Enfora Enabler II-G A-GPS products:

- This device may only be used in fixed and mobile applications.
- Portable applications, as defined by the FCC, are prohibited.
- The use of this device for desktop and other applications where the antenna can easily be relocated are considered by the FCC to be mobile applications.
- A separation distance of at least 20 cm (7.87 inches) between the antenna and the body of the user and other persons must be maintained at all times
- In FIXED applications, *antenna gain* is limited to a maximum of 7 dBi, with a corresponding Equivalent Isotropic Radiated Power (EIRP) of 37 dBm / 5 W.
- In MOBILE applications, *antenna gain* is limited to a maximum of 3 dBi, with a corresponding EIRP of 33 dBm / 2 W.
- End products must provide instructions to ensure compliance with radio frequency radiation exposure requirements.
- A warning label visible to all persons exposed to the antenna and identical to that described in this manual must be displayed on or next to the antenna.
- Separate FCC approval for RF exposure compliance is required for end products that do not meet these conditions.

Antenna gain is defined as gain in dBi (dB referenced to an isotropic radiator) minus cabling loss.

PRELIMINARY

Note: Additional care must be taken by the installer and/or user of the Enfora Enabler II-G A-GPS products to ensure proper antenna selection and installation. Adherence to the above conditions is necessary to comply with FCC requirements for safe operation regarding exposure to RF radiation.

Depending upon the application and type of product into which the Enfora Enabler II-G A-GPS module has been incorporated, specific OEM actions and responsibilities required to meet these conditions vary. However, in all cases the primary concern is to ensure compliance with current FCC guidelines and regulations that limit human exposure to radio frequency radiation.

Definitions

For the purpose of determining compliance with current FCC rules addressing human exposure to radio frequency radiation, the FCC has established the following three categories of transmitting devices:

- Portable Devices – devices where the antenna is located within 20 cm (7.87 inches) of any person, including the user, if applicable. Portable devices operating under the authority of Part 24 (broadband PCS) are limited to a maximum of 2 W EIRP.

- Mobile Devices – devices designed to be used in other than fixed locations and generally such that the antenna is located at a minimum of 20 cm (7.87 inches) from any person, including the user, if applicable. Mobile devices operating under the authority of Part 24 (broadband PCS) are limited to a maximum of 2 W EIRP.

- Fixed devices – devices in which the antenna, either integral to the product or remotely located, is physically secured at one location and is not able to be easily moved to another location.

PRELIMINARY

14.8.1 OEM Responsibilities for All Products Containing the Enabler II-G A-GPS module

In addition to any other regulatory requirements, OEMs and integrators must include or provide the following information, instructions, warnings and labels with any device or product into which the Enfora Enabler II-G A-GPS PCS-1900 GSM transceiver has been incorporated:

Information	Description	
Detailed Operating Instructions for ensuring compliance with current FCC guidelines which limit human exposure to radio frequency radiation	The OEM must provide an operating/installation manual with the final product which clearly indicates that these operating conditions and restrictions must be observed at all times to ensure compliance with current FCC guidelines which limit human exposure to radio frequency radiation. 20 cm (7.87 inch) separation distance between the antenna and all persons must be maintained at all times for all fixed and mobile products and applications Portable devices and applications are prohibited unless such devices and products are specifically authorized by the FCC Maximum antenna gain is limited to 3 dBi* in mobile products and applications Maximum antenna gain is limited to 7 dBi* in fixed products and applications. Modifications and/or additions to the Enfora Enabler II-G A-GPS GSM transceiver, including use of antennas with higher gain than those authorized by the FCC, are prohibited *dBi = antenna gain in dB relative to an isotropic radiator	
Antenna Avoidance Label	Attach the following warning label directly to or displayed next to the antenna. Furthermore, this label must be visible to and easily readable by all persons in the immediate vicinity of the antenna	**WARNING** **To comply with FCC RF exposure requirements, a separation distance of 20 cm (7.87”) or more must be maintained between this antenna and all persons**
Human Exposure Compliance Statement	Include the following statement in the instruction / operation manual.	Enfora certifies that the Enfora Enabler II-G A-GPS ™ MHz GSM Radio Module (FCC ID: MIVMLG0208) complies with the RF hazard requirements applicable to broadband PCS equipment operating under the authority of 47 CFR Part 24, Subpart E of the FCC Rules and Regulations. This certification is contingent upon installation, operation and use of the Enfora Enabler II-G A-GPS module and its host product in accordance with all instructions provided to both the OEM and end used. When installed and operated in a manner consistent with the instructions provided,

		the Enfora Enabler II-G A-GPS module meets the maximum permissible exposure (MPE) limits for general population / uncontrolled exposure at defined in Section 1.1310 of the FCC Rules and Regulations.

PRELIMINARY

14.8.2 Specific OEM Responsibilities for Portable Products and Applications

Each device or product, into which the Enfora Enabler II-G A-GPS PCS-1900 GSM transceiver has been incorporated, and which is intended to be used in an application that meets the definition of "portable" MUST be separately authorized by the FCC for the purposes of determining compliance with current FCC guidelines limiting human exposure to radio frequency radiation.

Portable devices must be evaluated for RF exposure based on Specific Absorption Rate (SAR) limits; further information on such evaluations are available from the FCC via the Internet.

14.8.3 Specific OEM Responsibilities for Mobile Products and Applications

Separate or additional FCC approvals are NOT required for devices or products, into which the Enfora Enabler II-G A-GPS PCS-1900 GSM transceiver has been incorporated, that are used in applications that meet the definition of "mobile."

For all end products, the OEM or integrator must provide instructions, warnings and labels to ensure that the product complies with current FCC guidelines limiting human exposure to radio frequency radiation.

Current FCC regulations limit the EIRP of mobile devices to 2 W. Because the nominal RF output power of the Enfora Enabler II-G A-GPS PCS-1900 GSM transceiver is 1.0 W (30 dBm), antenna gain for mobile products and applications cannot exceed 3 dBi.

14.8.4 Specific OEM Responsibilities for Fixed Products and Applications

Separate or additional FCC approvals are not required for devices or products, into which the Enfora Enabler II-G A-GPS GSM transceiver has been incorporated, that are used in applications that meet the definition of "fixed."

For all end products, the OEM or integrator must provide the instructions, warnings and labels to ensure that the product complies with current FCC guidelines limiting human exposure to radio frequency radiation.

Separate or additional FCC approvals are required for devices or end products used in fixed applications where antenna gain in excess of 7dBi is desired.

14.9 Nationally Recognized Testing Laboratory (NRTL) Approval

The Enfora Enabler II-G A-GPS module has been tested by an NRTL and approved as a component for incorporation into OEM products. The final product and application that incorporates the Enfora Enabler II-G A-GPS module will require separate verification of product safety approval.

PRELIMINARY

14.10 EMC/Safety Requirements for the Countries of the European Union (EU)

The European Union (EU) is comprised of fifteen countries that follow a harmonized set of standards, utilizing the CE mark as a uniform mark of acceptance. The member countries are:

- Austria
- Belgium
- Denmark
- Finland
- France
- Germany
- Greece
- Ireland
- Italy
- Luxembourg
- The Netherlands
- Portugal
- Spain
- Sweden
- United Kingdom

14.11 EMC/Safety Requirements for Other Countries

In most other countries that have not been listed above there are similar rules and regulations that must be met for importing the Enfora Enabler II-G A-GPS module. Each may require a different mark of approval (for example, the CB Scheme) as an acceptance requirement. For each of these cases the country should identified, and the appropriate steps should be taken to meet the requirements set forth in the intended market.

PRELIMINARY

15.0 APPENDIX C - Glossary and Acronyms

A-GPS	Assisted GPS
API	Application Programming Interface.
App Application	Refers to the Application which sends or receives commands/responses from the Enfora Enabler II-G A-GPS Module
AT Command Set	Commands issued by intelligent device to a modem to perform functions, such as to initiate call, to answer call, or to transmit data.
BER **Bit Error Rate**	Bit Error Rate
CMUX	Multiplexer protocol that operates between an MS and a TE and allows a number of simultaneous sessions over a normal serial asynchronous interface
CPE **Customer Premise Equipment**	A terminal in fixed location on the customer's premises.
CSD **Circuit Switched Data**	Data link from a terminal through the network allowing real-time, duplex connectivity at 9600 bytes/second.
Dbi	Decibels referenced to an isotropic radiator
DCE **Data Communications Equipment**	Data Communications Equipment
DCS **Digital Cellular System**	A collection of services and capabilities providing flexibility of access and mobility through a combination of wireless and wire-line networks, utilizing the 1800 MHz bandwidth.
DTE **Data Terminal Equipment**	Data Terminal Equipment
EFR **Enhanced Full Rate**	Voice (vocoder) compression algorithms which offer the highest quality voice communication.
EIR **Equipment Identity Register**	A database used to store International Mobile Equipment Identity (IMEI) of a locally issued terminal.
EIRP **Equivalent Isotropic Radiated Power**	In a given direction, the gain of a transmitting antenna multiplied by the net power accepted by the antenna from the connected transmitter.
EMC **Electromagnetic Compatibility**	The ability of a device to function satisfactorily in its electromagnetic environment without inducing intolerable disturbance to that environment (or to other devices)
ESD **Electrostatic Discharge**	Static electricity that can damage electronic equipment.
EU **European Union**	An organization of 15 European states whose purpose is to organize relations between the Member States and between their peoples.
FTA **Full Type Approval**	GSM Full Type Approval
GPRS **General Packet Radio Service**	Standard for packet communications utilizing Global Standard for Mobility (GSM) infrastructure.
GPS	Global Positioning System
GSM **Global System for Mobile Communications**	Standard for digital communications. Allows consistent communications in various parts of the world despite variations in RF spectrum allocations. Transferring the SIM (see below) permits users to roam by changing terminal equipment.
HLR **Home Location Register**	Stores the identity and user data for all subscribers belonging to the area of the related MSC.

PRELIMINARY

IMEI **International Mobile Equipment Identity**	A unique number for each GSM Terminal tracked by the GSM operators in their Equipment Identity Register (EIR) database.
IMSI **International Mobile Subscriber Identification**	A unique number identifying the subscriber stored in the SIM card. Number is used in conjunction with the network for call routing.
Ki	A secret code used in authentication and encryption by the terminal.
MO **Mobile Originated**	Any GSM/GPRS service originated at the mobile terminal.
MT **Mobile Terminated**	Any GSM/GPRS service originated from or routed through the network and sent to the mobile terminal.
MSC **Mobile Switching Center**	The central switch of the GSM network. Performs call routing, collects call detail records for billing, and supervises system operations.
Non-Transparent Mode	Delivers a constantly low error rate but with a non-guaranteed throughput or delay. The Non-Transparent service provides a performance that is closest to using a modem over a fixed PSTN line.
NRTL **Nationally Recognized Test Laboratory**	OSHA-approved Nationally Recognized Testing Laboratory
OEM	Original Equipment Manufacturer.
PA	Power Amplifier.
Packet	A collection of data transmitted over a digital network in a burst.
PCS	Personal Communication Services.
PDA	Personal Digital Assistant.
PDU	Packet Data Unit.
PPP	Point-To-Point Protocol.
SIM	Subscriber Identity Module.
SMS	Short Message Service.
SMSC	Short Message Service Center.
UDP	User Datagram Protocol.

PRELIMINARY

16.0 APPENDIX D – Tables and Figures

TABLES

Table 1 - Enabler II-G Key Features 12
Table 2 - Enabler II-G A-GPS Pin Assignments 31
Table 3 - Modem Library Configurations 61

FIGURES

Figure 1 - PAD Architecture 13
Figure 2 – UDP API Architecture 14
Figure 3 - Assisted GPS Architecture 15
Figure 4 Enabler II-G A-GPS Module Block Diagram 20

PRELIMINARY

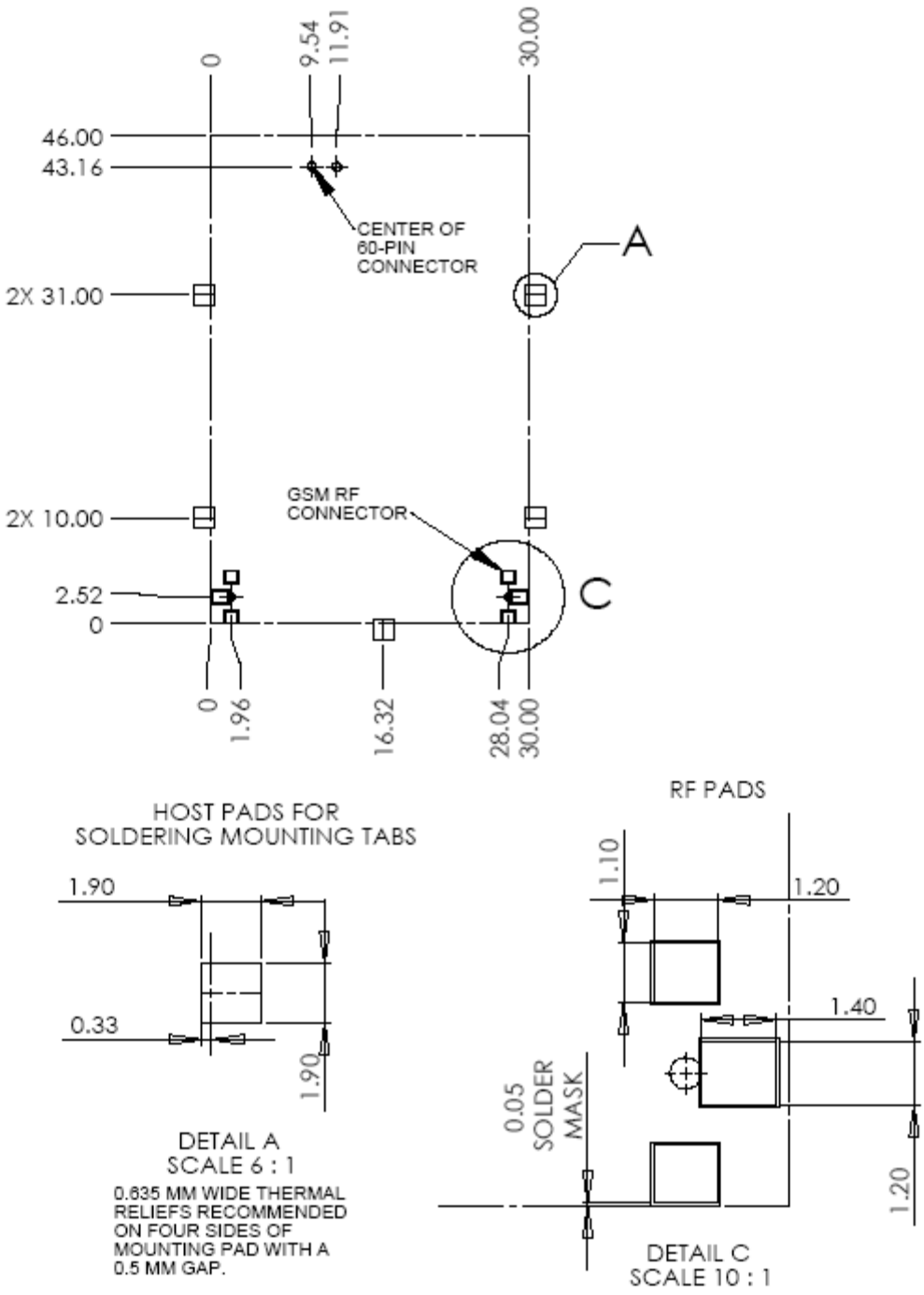

Figure 5 Enabler II-G Package Dimensions (without integrated SIM carrier) 26
Figure 6 Enabler II-G Package Dimensions (with integrated SIM carrier) 27
Figure 7 Vertical Enabler II-G Mounting 29
Figure 8 Enabler II-G Mounting Tabs 29

Figure 9 Module Pin Orientations 30
Figure 10 Ring Indicate Timing 35
Figure 9 External Power Control Signal (no external processor) 36
Figure 10 External Power Control Signal (using external RC circuit) 37
Figure 11 Power Control Signal (using external processor) 38
Figure 12 Typical Power On Sequence (using external processor) 39
Figure 13 Power Down/Reset (using external processor) 40
Figure 11 Enabler II-G A-GPS Module Serial Interface with Dedicated Serial Port and GPS Port42
Figure 12 Enabler II-G A-GPS Module Serial Interface with Mux Serial Port and Debug 43
Figure 13 Enabler II-G A-GPS Module Serial Interface with Mux Serial Port and Debug 44
Figure 14 Audio Reference 48
Figure 15 Remote SIM Interface 50
Figure 16 UDP-API Structure 58
Figure 17 Library Layout 60
Figure 18 Using Port Library 61
Figure 19 Using Messaging Library 61
Figure 20 Using Modem Library 63
Figure 21 HyperTerminal Definition 64
Figure 22 COM Port Settings 65

PRELIMINARY

17.0 APPENDIX E - Contacting Enfora

For technical support and customer service dealing with the modem itself, contact the company where you purchased the product. If you purchased the product directly from Enfora, visit the SUPPORT page on the Enfora website: http://www.enfora.com.

PRELIMINARY