RF TEST REPORT

Applicant	TAKAYA Corporation
FCC ID	MK4IN-M-RST
Product	HYBRID Resetter
Model	IN-M-RST
Report No.	R2311A1307-R1V1
Issue Date	April 9, 2024

TA Technology (Shanghai) Co., Ltd. tested the above equipment in accordance with the requirements in **FCC CFR47 Part 15C (2023).** The test results show that the equipment tested is capable of demonstrating compliance with the requirements as documented in this report.

Liu Wei

Prepared by: Liu Wei

Fan Guangchang

Approved by: Fan Guangchang

TA Technology (Shanghai) Co., Ltd.

Building 3, No.145, Jintang Rd, Pudong Shanghai, P.R.China

TEL: +86-021-50791141/2/3

FAX: +86-021-50791141/2/3-8000

TABLE OF CONTENT

1. Test Laboratory 5
1.1. Notes of the Test Report 5
1.2. Test facility 5
1.3. Testing Location 5
2. General Description of Equipment Under Test 6
2.1. Applicant and Manufacturer Information 6
2.2. General Information 6
3. Applied Standards 7
4. Test Case Results 8
4.1. Occupied Bandwidth 8
4.2. Radiates Emission 10
4.3. Conducted Emission 16
5. Main Test Instruments 18
ANNEX A: The EUT Appearance 19
ANNEX B: Test Setup Photos 20

This report shall not be reproduced except in full, without the written approval of TA Technology (Shanghai) Co., Ltd.

Version	Revision Description	Issue Date
Rev.0	Initial issue of report.	March 4, 2024
Rev.1	Update information.	April 9, 2024
Note: This revised report (Report No.: R2311A1307-R1V1) supersedes and replaces the previously issued report (Report No.: R2311A1307-R1). Please discard or destroy the previously issued report and dispose of it accordingly.		

This report shall not be reproduced except in full, without the written approval of TA Technology (Shanghai) Co., Ltd.

Summary of Measurement Results

Number	Test Case	Clause in FCC rules	Verdict
1	Occupied Bandwidth	§2.1049 §15.215	PASS
2	Radiated Emissions Measurement	§15.201(a), §15.205(a), §15.209(a), §15.215(a)	PASS
3	AC Conducted Emissions	§15.207(a)	NA
Date of Testing: December 13, 2023 ~ December 25, 2023 Date of Sample Received: December 4, 2023			
Note: NA = Not Applicable. PASS: The EUT complies with the essential requirements in the standard. FAIL: The EUT does not comply with the essential requirements in the standard. All indications of Pass/Fail in this report are opinions expressed by TA Technology (Shanghai) Co., Ltd. based on interpretations and/or observations of test results. Measurement Uncertainties were not taken into account and are published for informational purposes only.			

This report shall not be reproduced except in full, without the written approval of TA Technology (Shanghai) Co., Ltd.

1. Test Laboratory

1.1. Notes of the Test Report

This report shall not be reproduced in full or partial, without the written approval of **TA Technology (Shanghai) Co., Ltd.** The results documented in this report apply only to the tested sample, under the conditions and modes of operation as described herein .Measurement Uncertainties were not taken into account and are published for informational purposes only. This report is written to support regulatory compliance of the applicable standards stated above.

1.2. Test facility

FCC (Designation number: CN1179, Test Firm Registration Number: 446626)

TA Technology (Shanghai) Co., Ltd. has been listed on the US Federal Communications Commission list of test facilities recognized to perform measurements.

A2LA (Certificate Number: 3857.01)

TA Technology (Shanghai) Co., Ltd. has been listed by American Association for Laboratory Accreditation to perform electromagnetic emission measurement.

1.3. Testing Location

Company:	TA Technology (Shanghai) Co., Ltd.
Address:	Building 3, No.145, Jintang Rd, Pudong Shanghai, P.R.China
City:	Shanghai
Post code:	201201
Country:	P. R. China
Contact:	Fan Guangchang
Telephone:	+86-021-50791141/2/3
Fax:	+86-021-50791141/2/3-8000
Website:	https://www.eurofins.com/electrical-and-electronics
E-mail:	Jack.Fan@cpt.eurofinscn.com

This report shall not be reproduced except in full, without the written approval of TA Technology (Shanghai) Co., Ltd.

2. General Description of Equipment Under Test

2.1. Applicant and Manufacturer Information

Applicant	TAKAYA Corporation
Applicant address	661-1 Ibara-cho,Ibara-shi,Okayama, Japan
Manufacturer	Hangzhou Century Co., Ltd.
Manufacturer address	528 Xingqi Road,Yuhang Economic Development Area, Hangzhou, P.R.China

2.2. General Information

EUT Description	
Model	IN-M-RST
SN	23000296
Hardware Version	19044P01-PWB-V11
Software Version	19044S01-V14
Power Supply	Battery
Antenna Type	Internal Antenna
Operating Frequency Range(s)	114.3 kHz (Tx only)
	21.5 kHz (Rx only)
State DC voltage	3 V
Note: 1. The EUT is sent from the applicant to TA and the information of the EUT is declared by the applicant.	

This report shall not be reproduced except in full, without the written approval of TA Technology (Shanghai) Co., Ltd.

3. Applied Standards

According to the specifications of the manufacturer, it must comply with the requirements of the following standards:

Test standards:

FCC CFR47 Part 15C (2023) Radio Frequency Devices

ANSI C63.10-2013

This report shall not be reproduced except in full, without the written approval of TA Technology (Shanghai) Co., Ltd.

4. Test Case Results

4.1. Occupied Bandwidth

Ambient Condition

Temperature	Relative humidity	Pressure
15°C ~ 35°C	20% ~ 80%	86 kPa ~ 106 kPa

Method of Measurement

The EUT was connected to the spectrum analyzer through space. RBW is set to 1 kHz; VBW is set to 3 kHz on spectrum analyzer.
Dector=Peak, Trace mode=max hold.

Test Setup

Measurement Uncertainty

The assessed measurement uncertainty to ensure 95% confidence level for the normal distribution is with the coverage factor k = 2, U= 936 Hz.

This report shall not be reproduced except in full, without the written approval of TA Technology (Shanghai) Co., Ltd.

Test Results:

Test frequency (kHz)	99% bandwidth (kHz)	Conclusion
114.3	5.014	PASS

This report shall not be reproduced except in full, without the written approval of TA Technology (Shanghai) Co., Ltd.

4.2. Radiates Emission

Ambient Condition

Temperature	Relative humidity	Pressure
15°C ~ 35°C	20% ~ 80%	86 kPa ~ 106 kPa

Method of Measurement

The test set-up was made in accordance to the general provisions of ANSI C63.10. The Equipment Under Test (EUT) was set up on a non-conductive table in the semi-anechoic chamber. The test was performed at the distance of 3 m between the EUT and the receiving antenna. The radiated emissions measurements were made in a typical installation configuration.
Sweep the whole frequency band through the range from 9 kHz to the 10th harmonic of the carrier, and the emissions less than 20 dB below the permissible value are reported.

During the test, below 30MHz, the center of the loop shall be 1 meters; above 30MHz, the height of receive antenna shall be moved from 1 to 4 meters, and the antenna shall be performed under horizontal and vertical polarization. The turntable shall be rotated from 0 to 360 degrees for detecting the maximum of radiated spurious signal level. The measurements shall be repeated with orthogonal polarization of the test antenna. The data of cable loss and antenna factor has been calibrated in full testing frequency range before the testing.
Set the spectrum analyzer in the following:
Below30MHz
RBW=9 KHz, VBW=30 KHz,
detector; The measurements employing a CISPR quasi-peak detector except for the frequency bands 9-90 kHz, 110-490 kHz and above 1000 MHz. Radiated emission limits in these three bands are based on measurements employing an average detector.

Test setup

9kHz ~ 30MHz

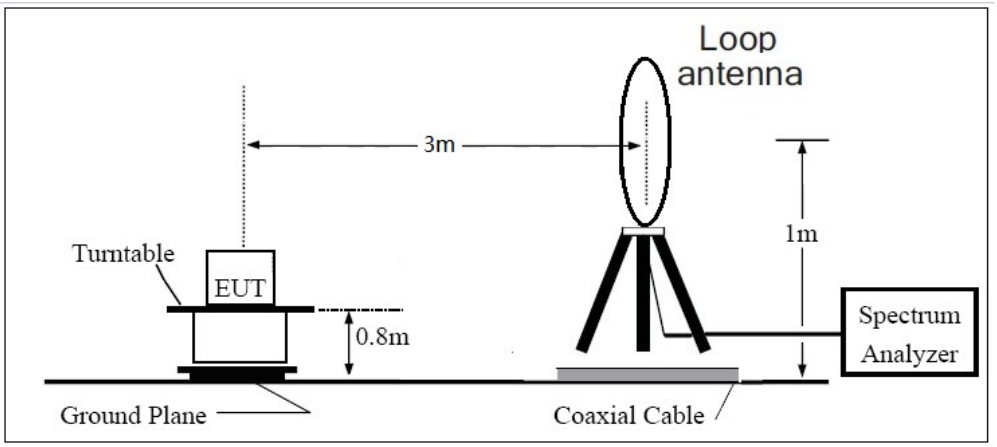

This report shall not be reproduced except in full, without the written approval of TA Technology (Shanghai) Co., Ltd.

Limits

Rule Part 15.247(d) specifies that "In addition, radiated emissions which fall in the restricted bands, as defined in § 15.205(a), must also comply with the radiated emission limits specified in § 15.209(a) (see § 15.205(c))."

Limit in restricted band

Frequency of emission (MHz)	Field strength(μV/m)	Field strength(dBμV/m)
0.009–0.490	2400/F(kHz)	/
0.490–1.705	24000/F(kHz)	/
1.705–30.0	30	/
30-88	100	40
88-216	150	43.5
216-960	200	46
Above960	500	54

§15.35(b)

There is also a limit on the radio frequency emissions, as measured using instrumentation with a peak detector function, corresponding to 20 dB above the maximum permitted average limit.

Peak Limit=74 dBμV/m

Average Limit=54 dBμV/m

Spurious Radiated Emissions are permitted in any of the frequency bands listed below:

MHz	MHz	MHz	GHz
0.090 - 0.110	16.42 - 16.423	399.9 - 410	4.5 - 5.15
[1]0.495 - 0.505	16.69475 - 16.69525	608 - 614	5.35 - 5.46
2.1735 - 2.1905	16.80425 - 16.80475	960 - 1240	7.25 - 7.75
4.125 - 4.128	25.5 - 25.67	1300 - 1427	8.025 - 8.5
4.17725 - 4.17775	37.5 - 38.25	1435 - 1626.5	9.0 - 9.2
4.20725 - 4.20775	73 - 74.6	1645.5 - 1646.5	9.3 - 9.5
6.215 - 6.218	74.8 - 75.2	1660 - 1710	10.6 - 12.7
6.26775 - 6.26825	108 - 121.94	1718.8 - 1722.2	13.25 - 13.4
6.31175 - 6.31225	123 - 138	2200 - 2300	14.47 - 14.5
8.291 - 8.294	149.9 - 150.05	2310 - 2390	15.35 - 16.2
8.362 - 8.366	156.52475 - 156.52525	2483.5 - 2500	17.7 - 21.4
8.37625 - 8.38675	156.7 - 156.9	2690 - 2900	22.01 - 23.12
8.41425 - 8.41475	162.0125 - 167.17	3260 - 3267	23.6 - 24.0
12.29 - 12.293	167.72 - 173.2	3332 - 3339	31.2 - 31.8
12.51975 - 12.52025	240 - 285	3345.8 - 3358	36.43 - 36.5
12.57675 - 12.57725	322 - 335.4	3600 - 4400	([2])
13.36 - 13.41			

Measurement Uncertainty

The assessed measurement uncertainty to ensure 95% confidence level for the normal distribution is with the coverage factor k = 1.96.

Frequency	Uncertainty
9KHz-30MHz	3.55 dB

This report shall not be reproduced except in full, without the written approval of TA Technology (Shanghai) Co., Ltd.

Test Results:

The following graphs display the maximum values of horizontal and vertical by software.

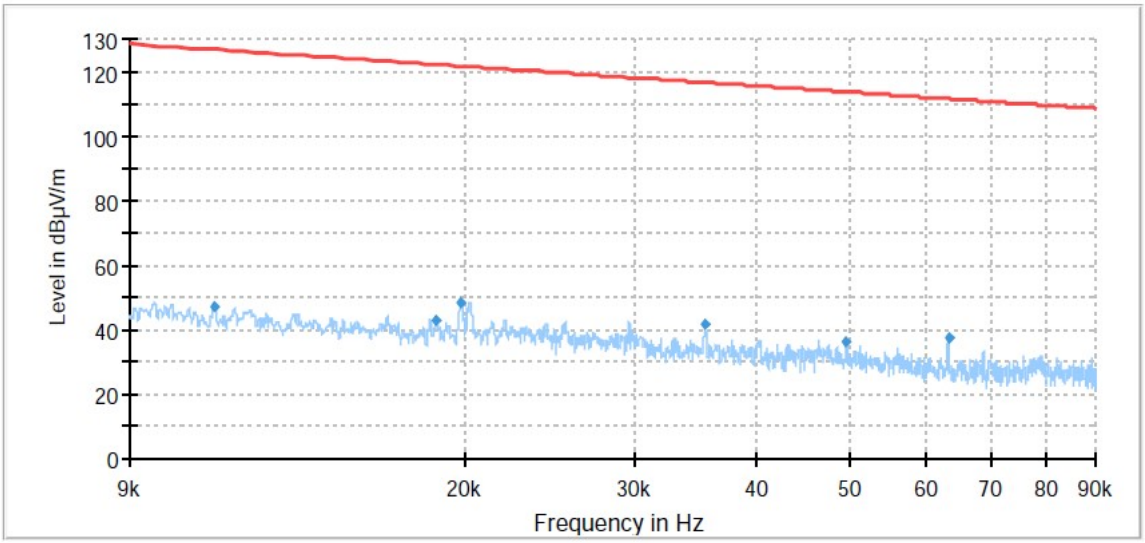

Radiates Emission from 9kHz to 90kHz

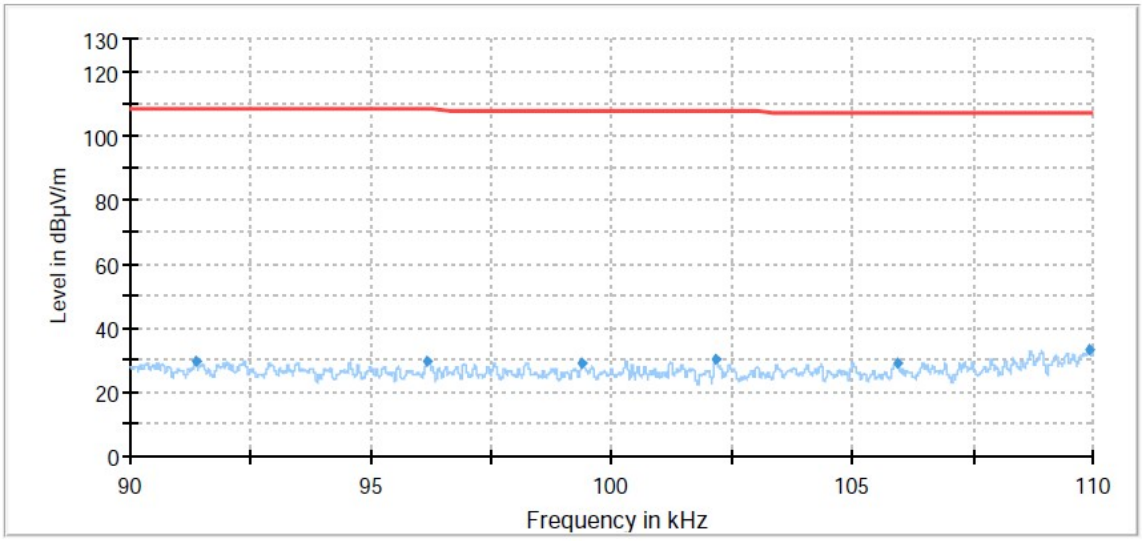

Radiates Emission from 90kHz to 110kHz

This report shall not be reproduced except in full, without the written approval of TA Technology (Shanghai) Co., Ltd.

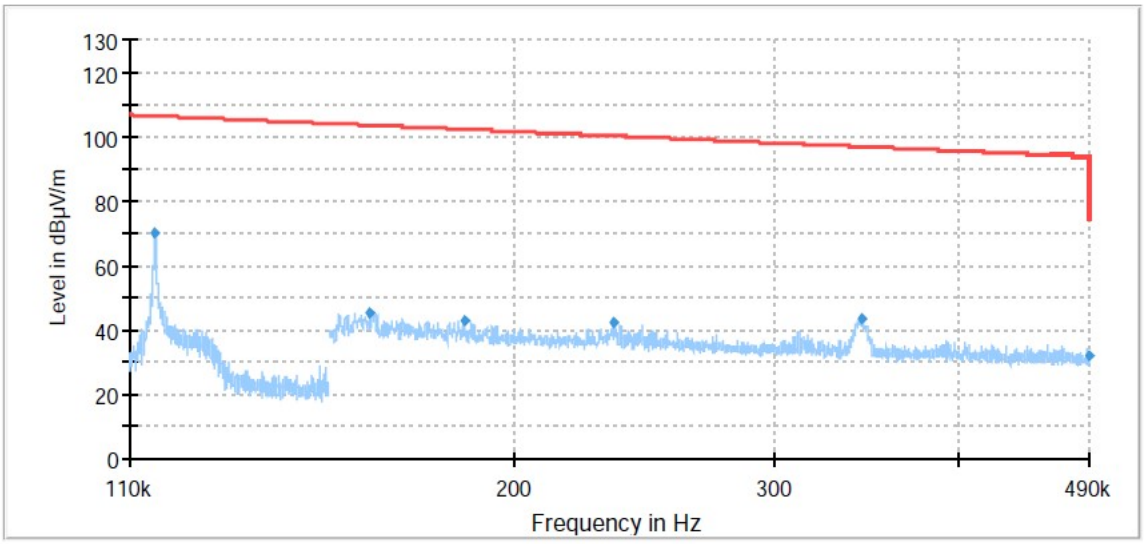

Radiates Emission from 110kHz to 490kHz

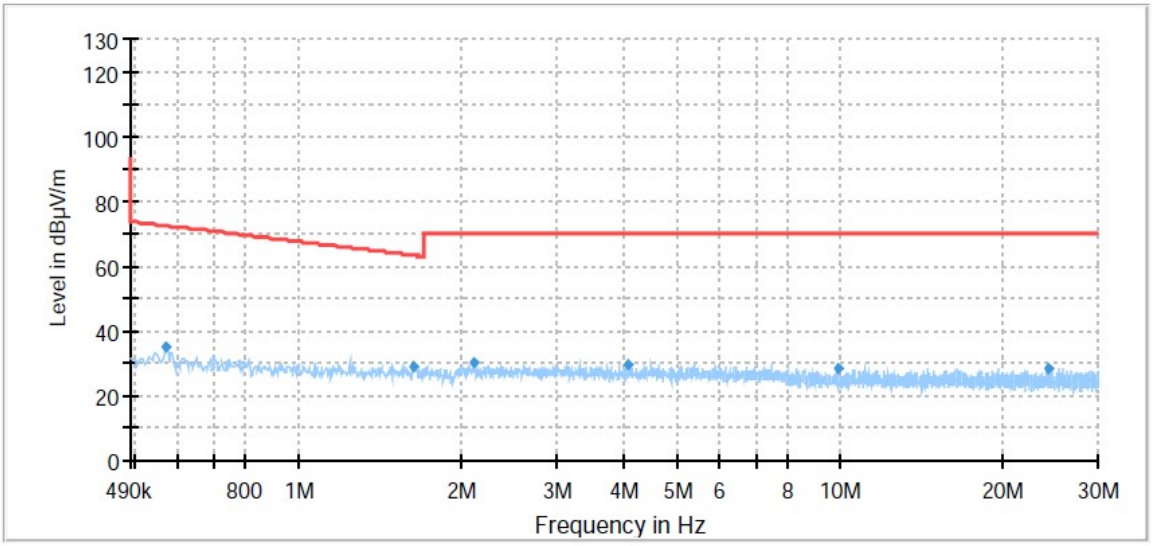

Radiates Emission from 490kHz to 30MHz

This report shall not be reproduced except in full, without the written approval of TA Technology (Shanghai) Co., Ltd.

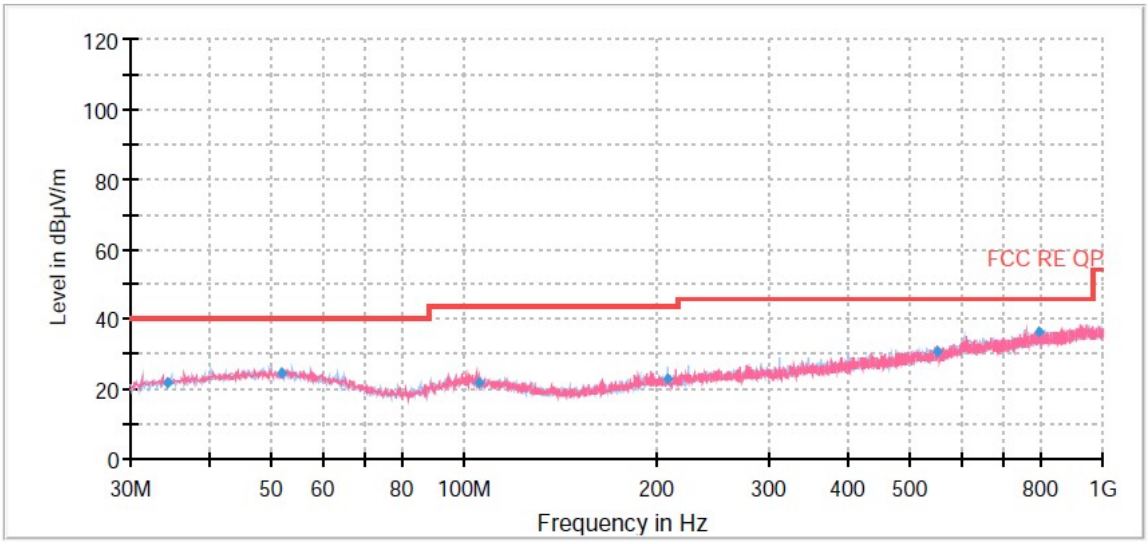

Radiates Emission from 30MHz to 1GHz

Frequency (MHz)	Average (dBµV/m)	Limit (dBµV/m)	Margin (dB)	Height (cm)	Polarization	Azimuth (deg)	Correct Factor (dB)
34.32	21.86	40.00	18.14	210.0	V	44.00	18
51.79	24.29	40.00	15.71	184.0	H	348.00	20
105.10	21.97	43.50	21.53	100.0	H	180.00	19
207.68	22.85	43.50	20.65	123.0	H	98.00	18
549.96	30.50	46.00	15.50	222.0	V	108.00	27
792.78	36.04	46.00	9.96	103.0	V	324.00	30

Remark: 1. Correction Factor = Antenna factor + Insertion loss (cable loss + amplifier gain)
2. Margin = Limit –Average

This report shall not be reproduced except in full, without the written approval of TA Technology (Shanghai) Co., Ltd.

Band Edge

A symbol (dBµV/) in the test plot below means (dBµV/m)

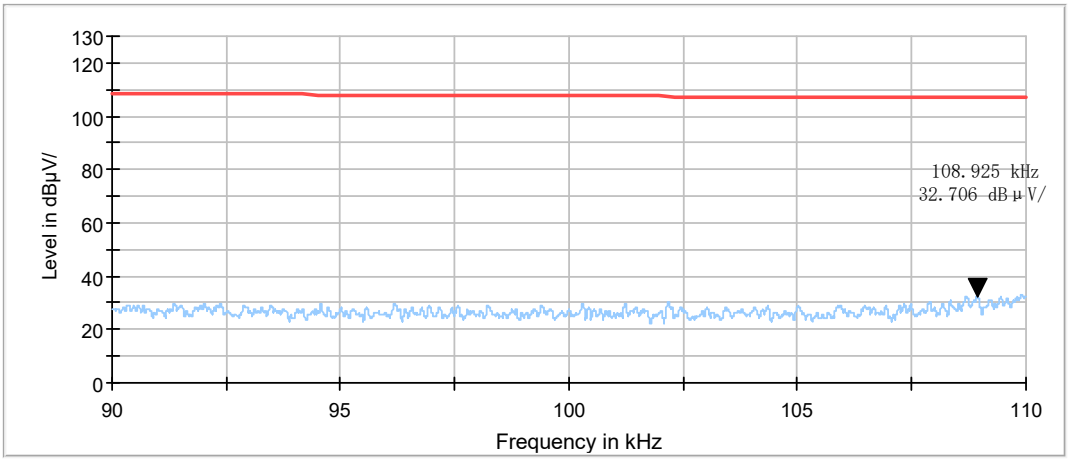

Band Edge from 9kHz to 90kHz

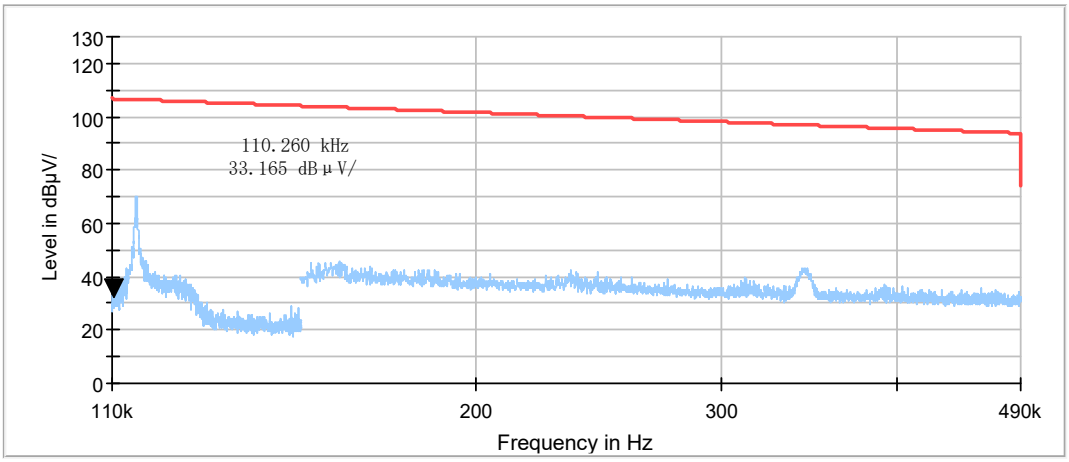

Band Edge from 110kHz to 160kHz

This report shall not be reproduced except in full, without the written approval of TA Technology (Shanghai) Co., Ltd.

4.3. Conducted Emission

Ambient Condition

Temperature	Relative humidity	Pressure
15°C ~ 35°C	20% ~ 80%	86 kPa ~ 106 kPa

Methods of Measurement

The EUT is placed on a non-metallic table of 80cm height above the horizontal metal reference ground plane. During the test, the EUT was operating in its typical mode. The test method is according to ANSI C63.10. Connect the AC power line of the EUT to the L.I.S.N. Use EMI receiver to detect the average and Quasi-peak value. RBW is set to 9 kHz, VBW is set to 30kHz.
The measurement result should include both L line and N line.
The test is in transmitting mode.

Test Setup

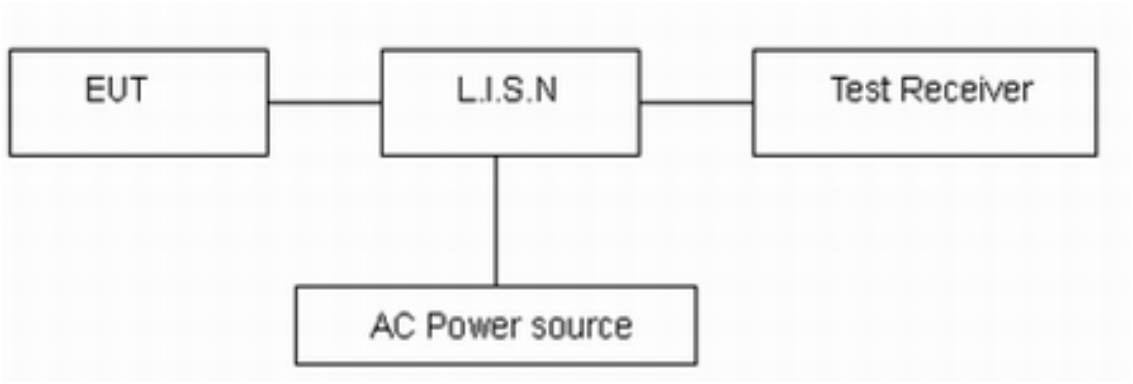

Note: AC Power source is used to change the voltage 110V/60Hz.

Limits

Frequency (MHz)	Conducted Limits(dBμV)	
	Quasi-peak	Average
0.15 - 0.5	66 to 56 *	56 to 46*
0.5 - 5	56	46
5 - 30	60	50
*: Decreases with the logarithm of the frequency.		

Measurement Uncertainty

The assessed measurement uncertainty to ensure 95% confidence level for the normal distribution is with the coverage factor k = 1.96, U= 2.69 dB.

This report shall not be reproduced except in full, without the written approval of TA Technology (Shanghai) Co., Ltd.

Test Results:

The equipment doesn't connect to public network, therefore this requirement does not apply.

This report shall not be reproduced except in full, without the written approval of TA Technology (Shanghai) Co., Ltd.

5. Main Test Instruments

Name	Manufacturer	Type	Serial Number	Calibration Date	Expiration Date
EMI Test Receiver	R&S	ESCI3	100948	2023-05-12	2024-05-11
Loop Antenna	SCHWARZBECK	FMZB1519	1519-047	2023-04-16	2026-04-15
TRILOG Broadband Antenna	SCHWARZBECK	VULB 9163	1023	2023-07-14	2026-07-13
Software	R&S	EMC32	9.26.01	/	/

This report shall not be reproduced except in full, without the written approval of TA Technology (Shanghai) Co., Ltd.

ANNEX A: The EUT Appearance

The EUT Appearance are submitted separately.

This report shall not be reproduced except in full, without the written approval of TA Technology (Shanghai) Co., Ltd.

ANNEX B: Test Setup Photos

The Test Setup Photos are submitted separately.

******** END OF REPORT ********

This report shall not be reproduced except in full, without the written approval of TA Technology (Shanghai) Co., Ltd.