FCC CRF47 PART15 CERTIFICATION
CLASS II PERMISSIVE CHANGE
TEST REPORT

For

2.4GHz 802.11B CLIENT RADIO
DIRECT SEQUENCE SPREAD SPECTRUM DATA TRANSCEIVER
WITH ALTERNATE AC-DC ADAPTER

FCC ID: MKZAZY2411BT

MODEL NO: AirEZY-2411-BT

REPORT NO: 02U1499-1

ISSUE DATE: SEPTEMBER 5, 2002

Prepared for
OTC WIRELESS, INC.
48507 MILMONT DRIVE
FREMONT, CA. 94538 USA

Prepared by
COMPLIANCE CERTIFICATION SERVICES
561F MONTEREY ROAD,
MORGAN HILL, CA. 95037, U.S.A.
TEL: (408) 463-0885

LAB CODE:200065-0

TABLE OF CONTENTS PAGE

1. VERIFICATION OF COMPLIANCE 3

2. DESCRIPTION OF EQUIPMENT UNDER TEST (EUT) 4

3. DESCRIPTION OF CLASS II PERMISSIVE CHANGE 4

4. TEST LOCATION 5

5. LABORATORY ACCREDITATIONS AND LISTINGS 6

6. SUPPORT/ TEST EQUIPMENT 7

SUPPORT EQUIPMENT 7
TEST EQUIPMENT 7
I/O CABLE CONFIGURATION 8
TEST CONFIGURATION DIAGRAM 9

7. TEST PROCEDURES AND TEST RESULTS 10

AC LINE CONDUCTED EMISSIONS TEST REQUIREMENT: 15.207 10

8. TEST SETUP PHOTO 13

CONDUCTED EMISSION SETUP PHOTOS 13

1. VERIFICATION OF COMPLIANCE

COMPANY NAME	:	OTC WIRELESS, INC. 48507 MILMONT DRIVE FREMONT, CA 94538
EUT DESCRIPTION	:	2.4GHz 802.11b CLIENT RADIO DIRECT SEQUENCE SPREAD SPECTRUM DATA TRANSCEIVER WITH ALTERNATE AC-DC ADAPTER
MODEL NAME	:	AirEZY-2411-BT
DATE TESTED	:	8/27/02

LIMIT APPLY TO: FCC PART 15 SECTION 15.247	
TECHNICAL LIMITS	**Status**
LIMIT APPLY TO: FCC PART 15 SECTION 15.207	
AC Line Conducted Emission	Tested

The above equipment was tested by Compliance Engineering Services Inc. for compliance with the requirements set forth in CFR 47 PART 15 SUBPART C. The equipment in the configuration described in this report show that the measured emission levels emanating from the equipment do not exceed the specified limit.

Tested By:

THANH NGUYEN
EMC TECHNICIAN
COMPLIANCE CERTIFICATION SERVICES

Approved & Released For CCS By:

THU CHAN
SENIOR EMC ENGINEER
COMPLIANCE CERTIFICATION SERVICES

COMPLIANCE CERTIFICATION SERVICES DOCUMENT NO: CCSUP4010B
561F MONTEREY ROAD, MORGAN HILL CA 95037 TEL:(408)463-0885 FAX:(408)463-0888

This report shall not be reproduced except in full, without the written approval of CCS.

2. DESCRIPTION OF EQUIPMENT UNDER TEST (EUT)

CHASSIS TYPE	**PLASTIC**
Frequency Range	**2412-2462 MHz**
Local Osc./Location	**20.0MHz Main / 24.7 MHz Top**
Channel Spacing	**5 MHz**
Transmit Power	**25mW**
Modulation Technique	**CCK**
Radio Technique	**Direct Sequence Spread Spectrum**
Number of Channels	**11**
Operating Mode	**Point-to-Point**
Air Data Rate	**11Mbps**
Antenna	**Permanently Attached (2dBi Gain)**
DC voltage	**5V Power Adaptor**
External Interface	**RJ45**
Emission Type	**F2D**

3. DESCRIPTION OF CLASS II PERMISSIVE CHANGE

The only change filed under this application is:

Change #1: Added an alternate AC-DC Adapter with the same electrical Rating, but different Manufacturer. The Manufacturer is Delta and Model Name ADP-10SB. The AC Input: 100-240Vac, 50-60Hz, 0.4A. The DC Output is +5V, 2A.

Therefore, it is the engineering justification to test only for FCC Rule 15.207 for this type of change.

COMPLIANCE CERTIFICATION SERVICES DOCUMENT NO: CCSUP4010B
561F MONTEREY ROAD, MORGAN HILL CA 95037 TEL:(408)463-0885 FAX:(408)463-0888
This report shall not be reproduced except in full, without the written approval of CCS.

4. TEST LOCATION

All emissions tests were performed at:

Compliance Engineering Services, Inc.
561F Monterey Road
Morgan Hill, CA 95037

CCS has site descriptions on file with the FCC for 10 and 3 meter site configurations. CCS is a NVLAP accredited facility.

Measurement Uncertainty.

Where relevant, the following measurement uncertainty levels have been estimated for tests performed on the apparatus:

Radiated Emission	
30MHz – 200 MHz	+/- 3.3dB
200MHz – 1000MHz	+4.5/-2.9dB
1000MHz – 2000MHz	+4.6/-2.2dB
Power Line Conducted Emission	
150kHz – 30MHz	+/-2.9

This report shall not be reproduced except in full, without the written approval of CCS.

5. LABORATORY ACCREDITATIONS AND LISTINGS

Country	Agency	Scope of Accreditation	Logo
USA	NVLAP*	FCC Part 15, CISPR 22, AS/NZS 3548,IEC 61000-4-2, IEC 61000-4-3, IEC 61000-4-4, IEC 61000-4-5, IEC 61000-4-6, IEC 61000-4-8, IEC 61000-4-11, CNS 13438	NVLAP 200065-0
USA	FCC	3/10 meter Open Area Test Sites to perform FCC Part 15/18 measurements	FC 1300
Japan	VCCI	CISPR 22 Two OATS and one conducted Site	VCCI R-1014, R-619, C-640
Norway	NEMKO	EN50081-1, EN50081-2, EN50082-1, EN50082-2, IEC61000-6-1, IEC61000-6-2, EN50083-2, EN50091-2, EN50130-4, EN55011, EN55013, EN55014-1, EN55104, EN55015, EN61547, EN55022, EN55024, EN61000-3-2, EN61000-3-3, EN60945, EN61326-1	N ELA 117
Norway	NEMKO	EN60601-1-2 and IEC 60601-1-2, the Collateral Standards for Electro-Medical Products. MDD, 93/42/EEC, AIMD 90/385/EEC	N ELA-171
Taiwan	BSMI	CNS 13438	商 檢 SL2-IN-E-1012
Canada	Industry Canada	RSS210 Low Power Transmitter and Receiver	Canada IC2324 A,B,C, and F

*No part of this report may be used to claim or imply product endorsement by NVLAP or any agency of the US Government

COMPLIANCE CERTIFICATION SERVICES DOCUMENT NO: CCSUP4010B
561F MONTEREY ROAD, MORGAN HILL CA 95037 TEL:(408)463-0885 FAX:(408)463-0888
This report shall not be reproduced except in full, without the written approval of CCS.

6. SUPPORT/ TEST EQUIPMENT

SUPPORT EQUIPMENT

TEST PERIPHERALS				
Device Type	Manufacturer	Model Number	Serial Number	FCC ID
LAPTOP	NOTEBOOK	N340S8	PB344S811902382	N/A
MODEM	ACEEX	1414	9013537	IFAXDM1414
PRINTER	HP	2225C	2930S52614	DSI6XU2225

TEST EQUIPMENT

TEST EQUIPMENTS LIST				
Name of Equipment	Manufacturer	Model No.	Serial No.	Due Date
EMI Test Receiver	Rohde & Schwarz	ESHS 20	827129/006	4/17/03
LISN	Fischer 9k - 100MHz	C-LISN-50/250-2	114	4/22/03
Line Filter	Lindgren 10k - 10GHz	LMF-3489	497	N.C.R.
LISN	Solar Elec. Co.	012-50-R-24-BN	837990	4/22/03

The measuring equipment which was utilized in performing the tests documented herein has been calibrated in accordance with the manufacturer's recommendations for utilizing calibration equipment which is traceable to recognized national standards.

COMPLIANCE CERTIFICATION SERVICES DOCUMENT NO: CCSUP4010B
561F MONTEREY ROAD, MORGAN HILL CA 95037 TEL:(408)463-0885 FAX:(408)463-0888
This report shall not be reproduced except in full, without the written approval of CCS.

I/O CABLE CONFIGURATION

TEST I / O CABLES								
Cable No	I/O Port	# of I/O Port	Connector Type	Type of Cable	Cable Length	Data Traffic	Bundled	Remark
1	Ethernet	1	RJ45	Unshielded	1m	Yes	No	N/A
2	AC/DC	1	DC Power	Unshielded	1.5m	No	No	N/A
3	Serial	1	DB9	Shielded	2m	Yes	Yes	N/A
4	Parallel	1	DB25	Shielded	2m	Yes	Yes	N/A
5	AC	1	US 115V	Un-shielded	2m	No	No	N/A
6	AC	1	US 115V	Un-shielded	2m	No	No	N/A
7	AC	1	US 115V	Un-shielded	2m	No	No	N/A
8	AC	1	US 115V	Un-shielded	2m	No	No	N/A

COMPLIANCE CERTIFICATION SERVICES DOCUMENT NO: CCSUP4010B
561F MONTEREY ROAD, MORGAN HILL CA 95037 TEL:(408)463-0885 FAX:(408)463-0888

This report shall not be reproduced except in full, without the written approval of CCS.

TEST CONFIGURATION DIAGRAM

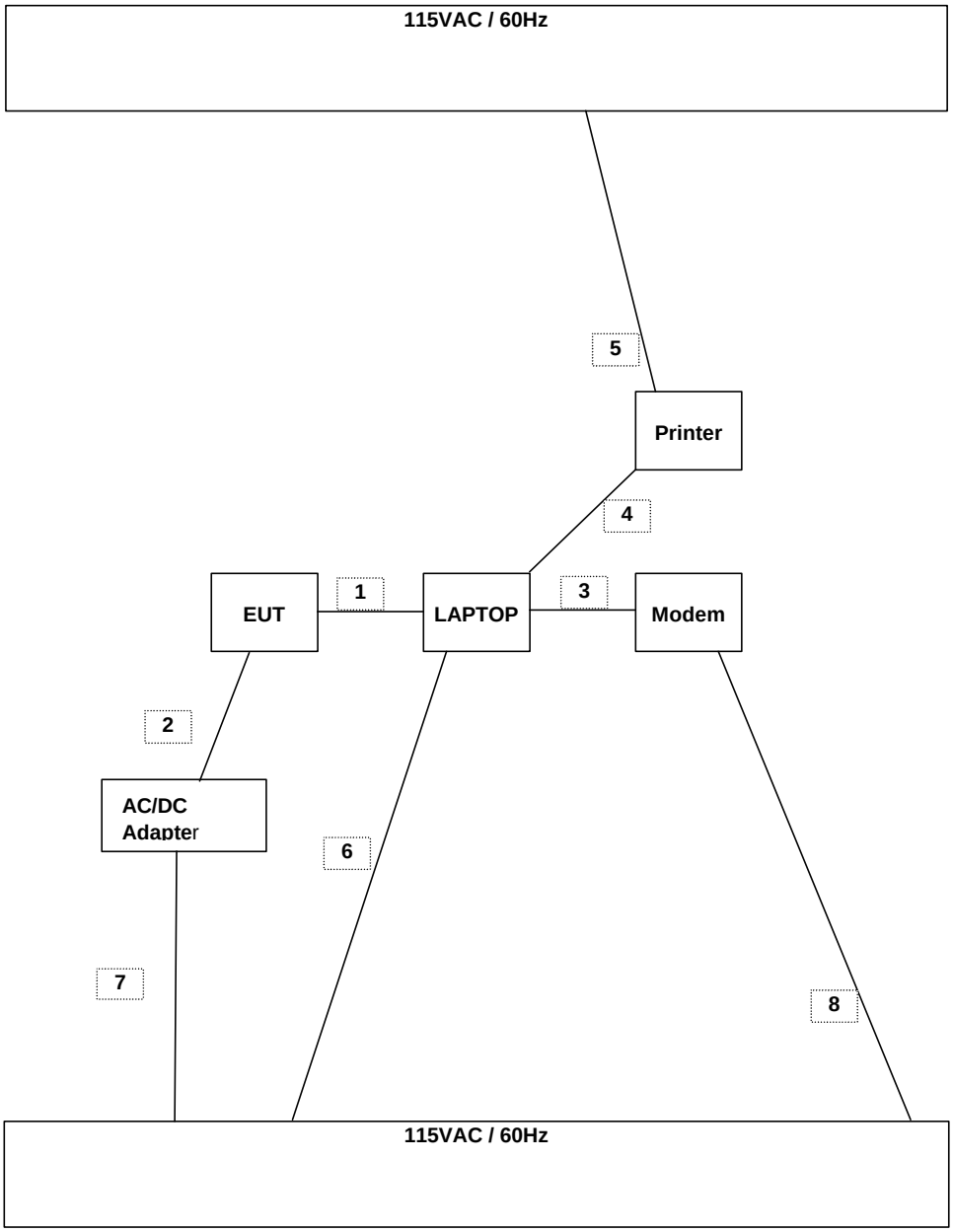

COMPLIANCE CERTIFICATION SERVICES DOCUMENT NO: CCSUP4010B
561F MONTEREY ROAD, MORGAN HILL CA 95037 TEL:(408)463-0885 FAX:(408)463-0888

This report shall not be reproduced except in full, without the written approval of CCS.

7. TEST PROCEDURES AND TEST RESULTS

AC LINE CONDUCTED EMISSIONS TEST REQUIREMENT: 15.207

Section 15.207 Conducted limits.

(a) For an intentional radiator which is designed to be connected to the public utility (AC) power line, the radio frequency voltage that is conducted back onto the AC power line on any frequency or frequencies within the band 450 kHz to 30 MHz shall not exceed 250 microvolts. Compliance with this provision shall be based on the measurement of the radio frequency voltage between each power line and ground at the power terminals.

Conducted Emission Limits	
Frequency range(MHz)	FCC Limits (dBuV)
.45-5	48
5-30	48

Test Set-up

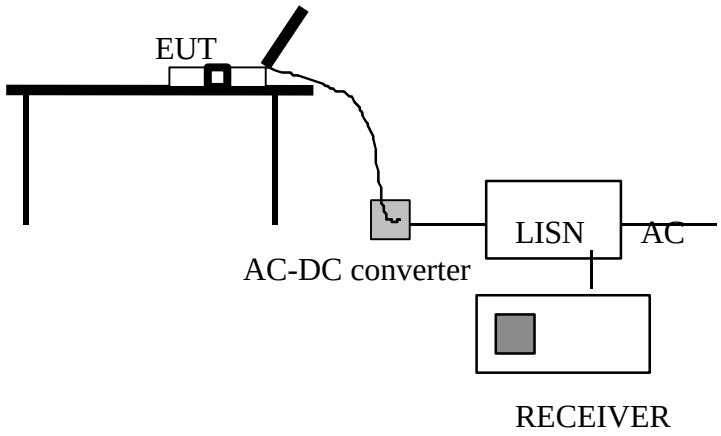

Fig. 2

Test Procedure

1. The EUT was placed on a wooden table 40 cm from a vertical ground plane and approximately 80 cm above the horizontal ground plane on the floor. The EUT was set to transmit in a normal mode.

2. Line conducted data was recorded for both NEUTRAL and HOT lines.

Test Results
Refer to attached graph

COMPLIANCE CERTIFICATION SERVICES DOCUMENT NO: CCSUP4010B
561F MONTEREY ROAD, MORGAN HILL CA 95037 TEL:(408)463-0885 FAX:(408)463-0888
This report shall not be reproduced except in full, without the written approval of CCS.

CONDUCTED EMISSIONS DATA (115VAC 60Hz)

Freq.	Reading			Closs	Limit	FCC_B	Margin		Remark
(MHz)	PK (dBuV)	QP (dBuV)	AV (dBuV)	(dB)	QP	AV	QP (dB)	AV (dB)	L1 / L2
10.20	44.50		--	0.00	48.00	--	-27.62	--	L1
1.92	45.19		--	0.00	48.00	--	-10.88	--	L1
6.59	42.64		--	0.00	48.00	--	-19.74	--	L1
12.47	43.02		--	0.00	48.00	--	-27.92	--	L2
13.74	41.52		--	0.00	48.00	--	-28.16	--	L2
1.53	40.72		--	0.00	48.00	--	-22.02	--	L2
6 Worst Data									

COMPLIANCE CERTIFICATION SERVICES DOCUMENT NO: CCSUP4010B
561F MONTEREY ROAD, MORGAN HILL CA 95037 TEL:(408)463-0885 FAX:(408)463-0888

This report shall not be reproduced except in full, without the written approval of CCS.

COMPLIANCE Engineering Services, Inc.
561F Monterey Road,
San Jose, CA 95037 USA
Tel: (408) 463-0885
Fax: (408) 463-0888

Data#: 8 File#: OTC1499.EMI Date: 08-27-2002 Time: 15:21:14

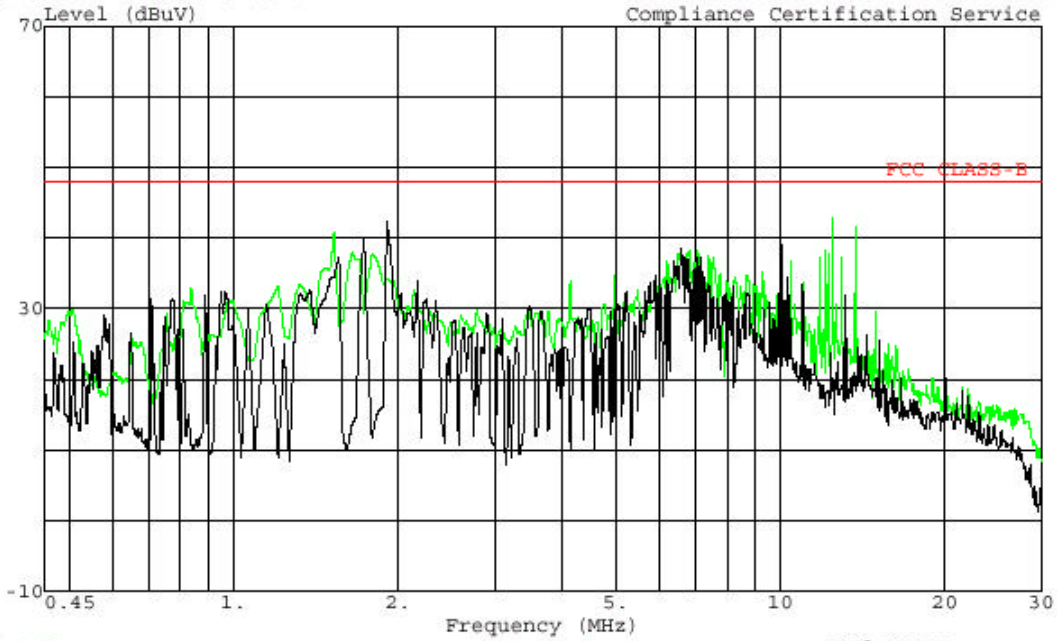

Trace: 15 Ref Trace:
Project # : 02U1499-1
Test Engineer: Thanh Nguyen
Company : OTC WIRLESS, INC.
EUT : 2.4GHz 802.11b CLIENT RADIO
: With Alternative AC-DC ADAPTER
Test Config. : EUT ,LapTop
Mode of Op. : Normal Operation
: L1: Peak (Black), L2: Peak (Green)
: 120Vac, 60Hz

This report shall not be reproduced except in full, without the written approval of CCS.

8. TEST SETUP PHOTO

CONDUCTED EMISSION SETUP PHOTOS

END OF REPORT

COMPLIANCE CERTIFICATION SERVICES DOCUMENT NO: CCSUP4010B
561F MONTEREY ROAD, MORGAN HILL CA 95037 TEL:(408)463-0885 FAX:(408)463-0888

This report shall not be reproduced except in full, without the written approval of CCS.