TABLE OF CONTENTS LIST

APPLICANT: MIDLAND RADIO CORPORATION

FCC ID: MMA713110B

TEST REPORT:

PAGE 1-2....COVER SHEET - GENERAL INFORMATION & TECHNICAL DESCR.
PAGE 3.....RF POWER OUTPUT
PAGE 4.....MODULATION CHARACTERISTICS
PAGE 5.....AUDIO FREQUENCY RESPONSE PLOT
PAGE 6.....MODULATION LIMITING PLOT – 300 Hz
PAGE 7.....MODULATION LIMITING PLOT – 1000 Hz
PAGE 8.....MODULATION LIMITING PLOT – 2500 Hz
PAGE 9.....AUDIO LOW PASS FILTER PLOT
PAGE 10.....OCCUPIED BANDWIDTH
PAGE 11.....OCCUPIED BANDWIDTH PLOT -CW
PAGE 12.....OCCUPIED BANDWIDTH PLOT –25 kHz
PAGE 13.....OCCUPIED BANDWIDTH PLOT – 12.5 kHz
PAGE 14.....SPURIOUS EMISSIONS AT ANTENNA TERMINALS
PAGE 15.....METHOD OF MEASURING SPURIOUS EMISSIONS AT ANTENNA TERM.
PAGE 16-17..FIELD STRENGTH OF SPURIOUS EMISSIONS
PAGE 18.....METHOD OF MEASURING RADIATED SPURIOUS EMISSIONS
PAGE 19.....FREQUENCY STABILITY
PAGE 20-21..TRANSIENT FREQUENCY RESPONSE
PAGE 22-23..TRANSIENT FREQUENCY RESPONSE PLOTS – 12.5k LOW POWER
PAGE 24-25..TRANSIENT FREQUENCY RESPONSE PLOTS – 12.5k HIGH POWER
PAGE 26-27..TRANSIENT FREQUENCY RESPONSE PLOTS – 25k HIGH POWER
PAGE 28-29..TRANSIENT FREQUENCY RESPONSE PLOTS – 25k LOW POWER
PAGE 30-33..LIST OF TEST EQUIPMENT

EXHIBITS CONTAINING:

EXHIBIT 1.....FCC ID LABEL SAMPLE
EXHIBIT 2.....SKETCH OF LOCATION
EXHIBIT 3.....SCHEMATIC
EXHIBIT 4.....USER’S MNUAL
EXHIBIT 5.....EXTERNAL PHOTOS
EXHIBIT 6.....INTERNAL PHOTOS
EXHIBIT 7.....TUNING PROCEDURE
EXHIBIT 8.....CIRCUIT DESCRIPTION
EXHIBIT 9.....TEST SETUP PHOTOGRAPHS

GENERAL_INFORMATION_REQUIRED
FOR_TYPE_ACCEPTANCE

2.1033(c)(1)(2) MIDLAND RADIO CORPORATION will manufacture the FCCID: MMA713110B VHF TRANSCEIVER in quantity, for use under FCC RULES PART 90.

MIDLAND RADIO CORPORATION
1120 CLAY STREET
NORTH KANSAS CITY, MO 64116

2.1033 (c) TECHNICAL_DESCRIPTION

2.1033(c)(3) Instruction book. A draft copy of the instruction manual is included as EXHIBIT 4.

2.1033(c) (4) Type of Emission: 15K0F3E for 25 kHz
90.209 10K0F3E for 12.5 kHz

FOR 25 kHz
Bn = 2M + 2DK
M = 2500
D = 5000
Bn = 2(2500)+2(5000)(1) = 15k

90.209(b)(5) Authorized Bandwidth 20 kHz

FOR 12.5 kHz
Bn = 2M + 2DK
M = 2500
D = 2500
Bn = 2(2500)+2(2500)(1) = 10k

90.209(b)(5) Authorized Bandwidth 11.25 kHz

2.1033(c)(5) Frequency Range: 150-174 MHz
90.209

2.1033(c)(8) DC Voltages and Current into Final Amplifier:
POWER INPUT:

FINAL AMPLIFIER ONLY
Vce = 12.0 Volts
IC LOW = 12 A
IC HIGH = 20 A

2.1033(c)(9) Tune-up procedure. The tune-up procedure is included in Exhibit 7.

2.1033(c)(10) Complete Circuit Diagrams: The circuit diagram is included as EXHIBIT 3.

2.1033(c)(11) A photograph or a drawing of the equipment identification label is included as Exhibit #1.

2.1033(c)(12) Photographs(8"X10") of the equipment of sufficient clarity to reveal equipment construction and layout, including meters, labels for controls, including any view under shields - See EXHIBIT 5-6.

2.1033(c)(13) Digital modulation is not allowed.

2.1033(c)(14) The data required by 2.1046 through 2.1057 is submitted below.

90.203(e) For transmitter designed to operate above 25 MHz shall not be certificated for use under this part if the operator can program and transmit on frequencies, other than those programmed by the manufacturer, service or maintenance personnel, using the equipment’s external operation controls.

The operator’s manual for this equipment states on page 7 under ‘installation and programming’ that the equipment supplier or qualified radio tradesman using the Titan Base Repeater programming software are the only ones that can change the transmitting frequencies.

2.1046(a) RF power output.

90.205 RF power is measured by connecting a 50 ohm, Resistive wattmeter to the RF output connector. With a nominal battery voltage of 12.0 VDC, and the Transmitter properly adjusted, the RF output measures:

INPUT POWER: HIGH: (12V)(20A) = 240 Watts
INPUT POWER: LOW: (12V)(12A) = 144 Watts

OUTPUT POWER: HIGH: 110 Watts
LOW: 70 Watts

METHOD OF MEASURING RF POWER OUTPUT

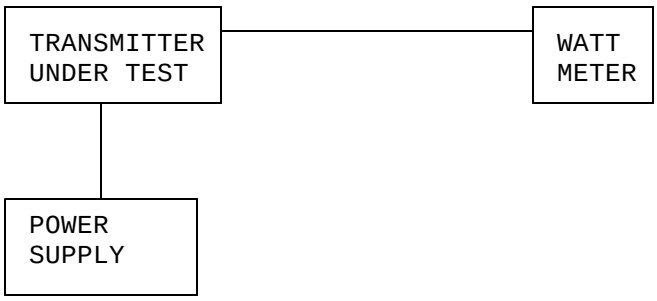

2.1047(a)(b) Modulation characteristics:

AUDIO FREQUENCY RESPONSE

The audio frequency response was measured in accordance with TIA/EIA Specification 603. The audio frequency response curve is shown on page 5.
The audio signal was fed into a dummy microphone circuit and into the microphone connector. The input required to produce 30 percent modulation level was measured.

2.1047(b) Audio input versus modulation

The audio input level needed for a particular per-percentage of modulation was measured in accordance with TIA/EIA Specification 603. The audio input curves versus modulation are shown in pages 6-8. Curves are provided for audio input frequen cies of 300, 1000, and 3000 Hz.

Post Limiter Filter The filter must be between the modulation limiter and the modulated stage. At any frequency between 3 & 20 kHz the filter must have an attenuation of 60log (f/3) greater that the attenuation at 1KHz. See the plot; page 9.

AUDIO FREQUENCY RESPONSE GRAPH

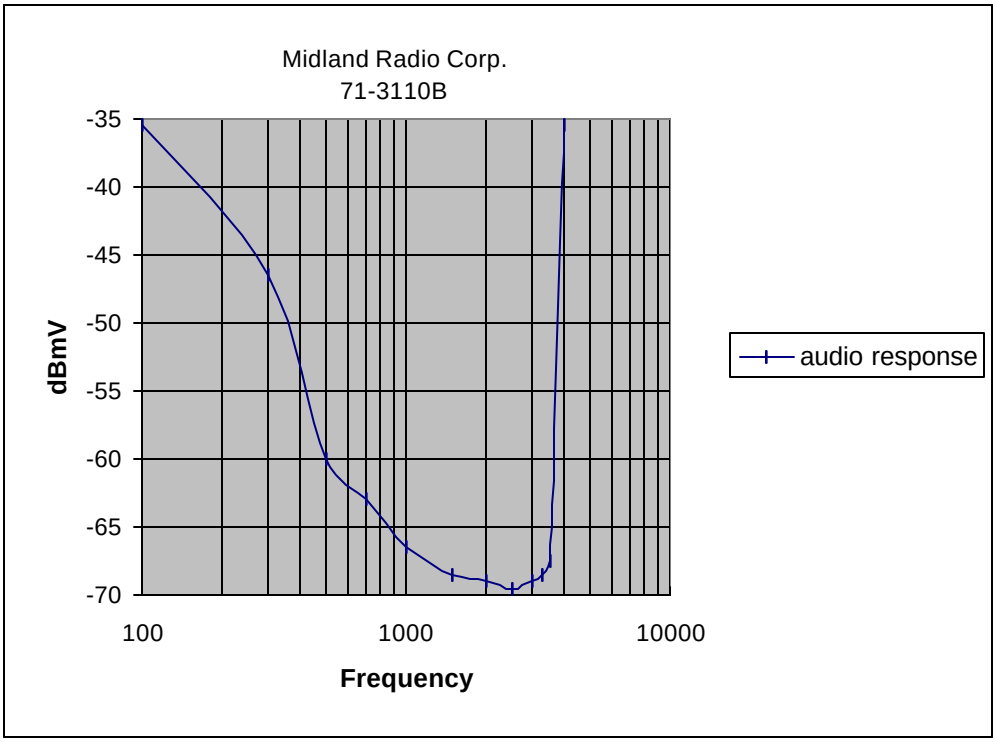

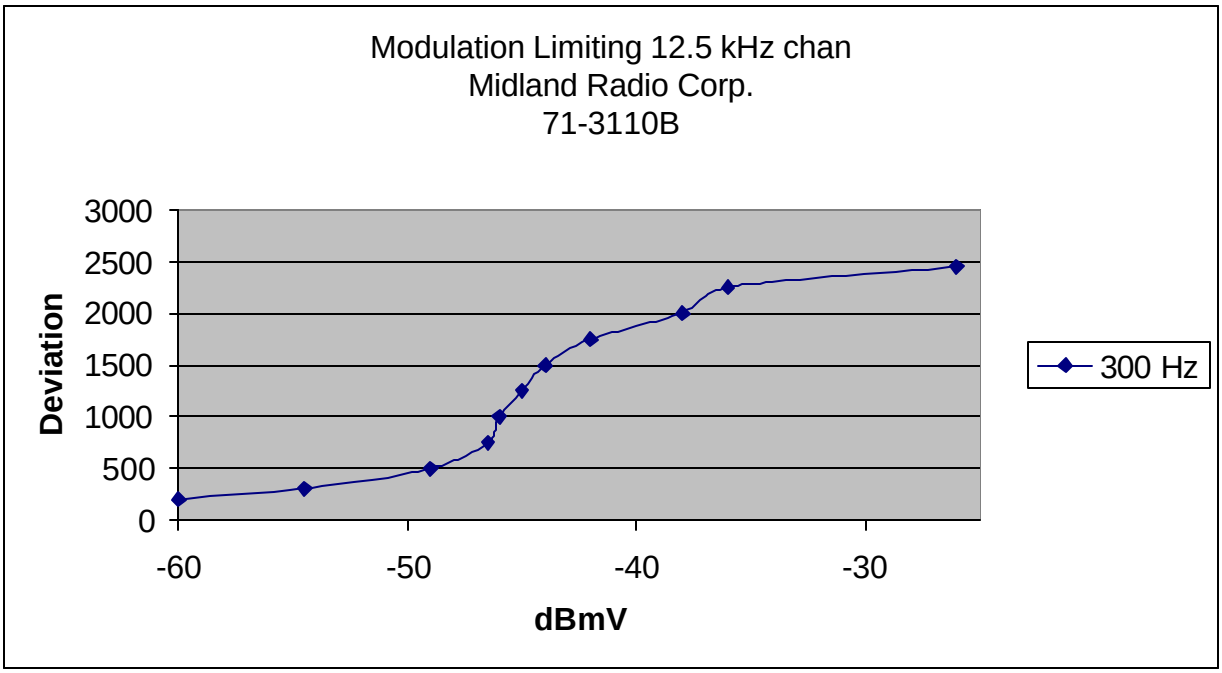
Modulation Limiting 12.5 kHz chan
Midland Radio Corp.
71-3110B
Deviation
3000
2500
2000
1500
1000
500
0
-60
-50
-40
-30
dBmV
300 Hz

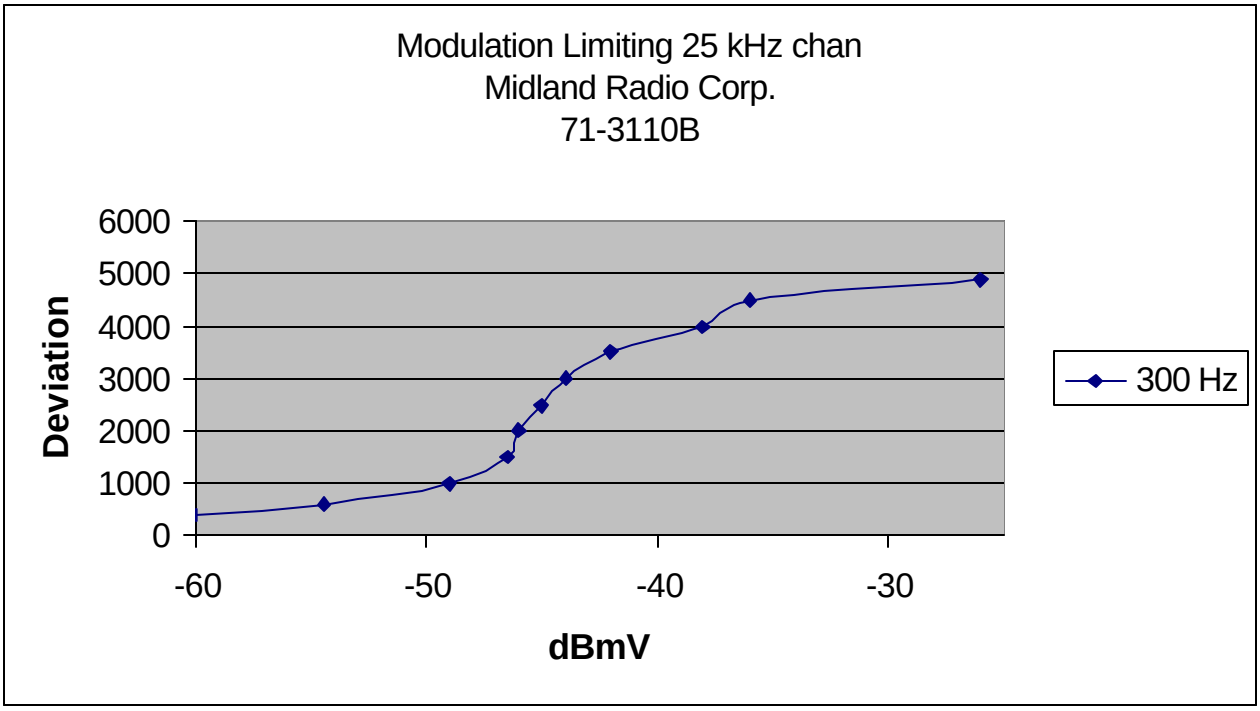
Modulation Limiting 25 kHz chan
Midland Radio Corp.
71-3110B
Deviation
6000
5000
4000
3000
2000
1000
0
-60
-50
-40
-30
dBmV
300 Hz

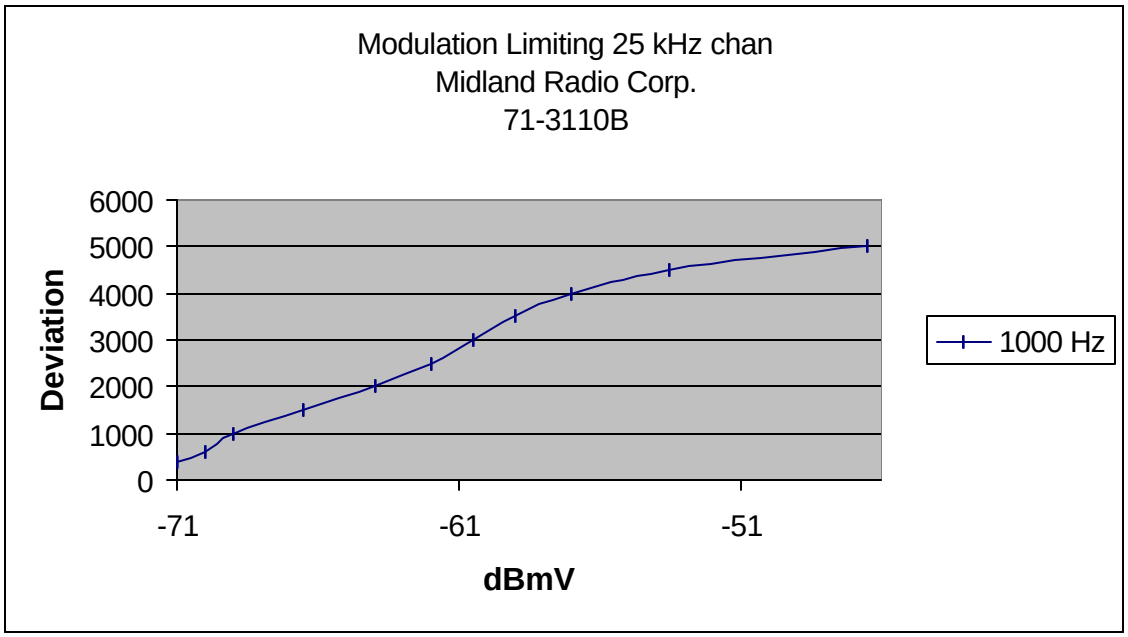
Modulation Limiting 25 kHz chan
Midland Radio Corp.
71-3110B
Deviation
6000
5000
4000
3000
2000
1000
0
-71
-61
-51
dBmV
1000 Hz

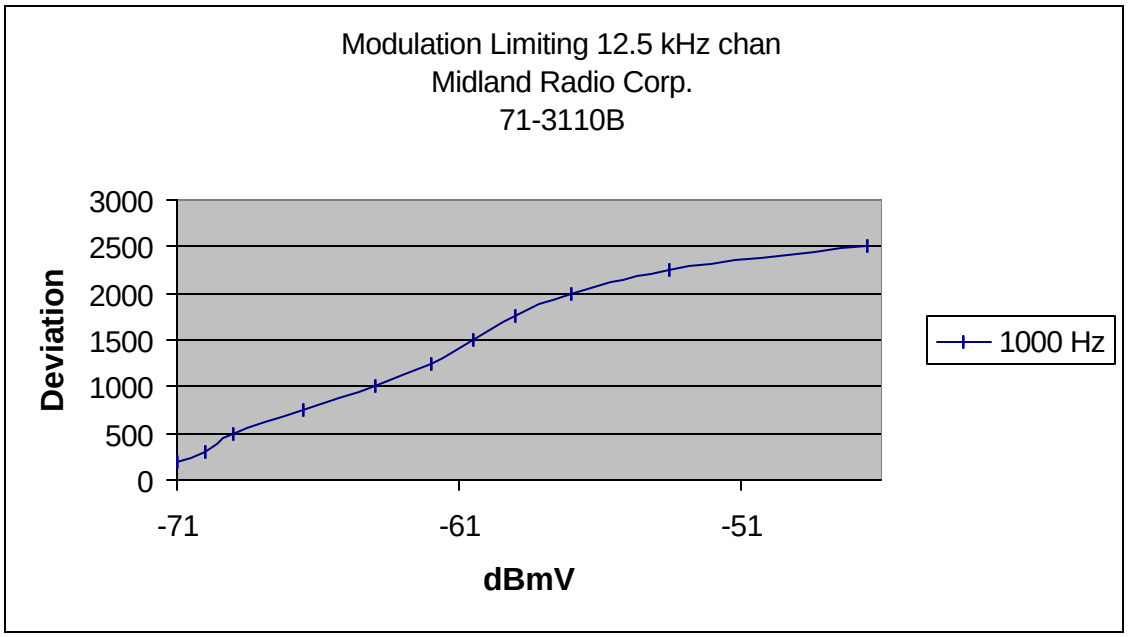
Modulation Limiting 12.5 kHz chan
Midland Radio Corp.
71-3110B
Deviation
3000
2500
2000
1500
1000
500
0
-71
-61
-51
dBmV
1000 Hz

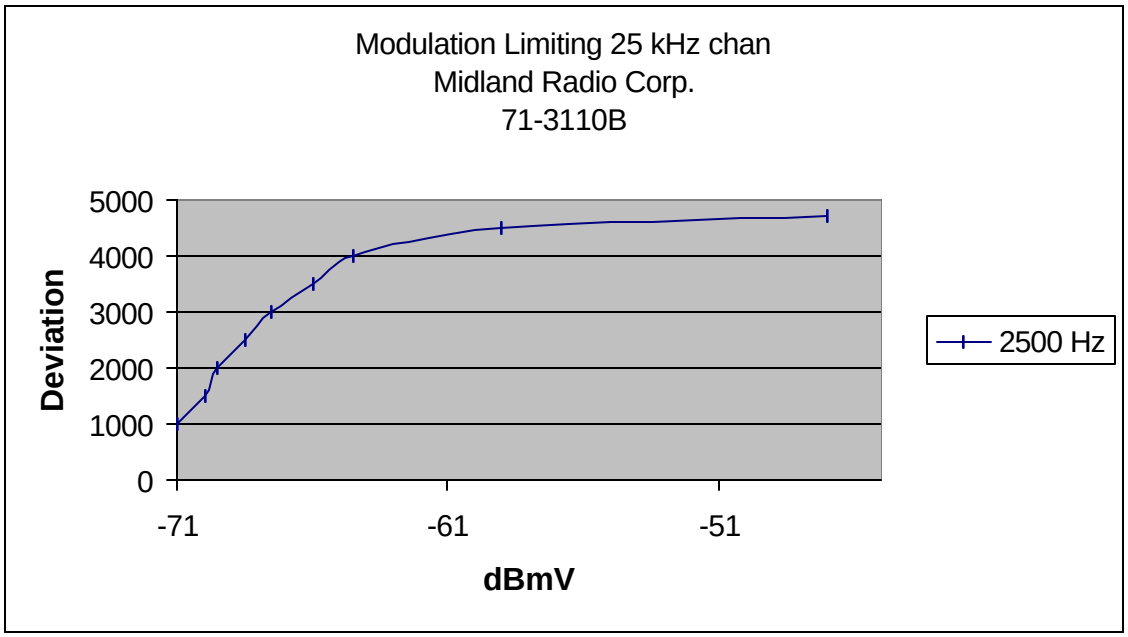
Modulation Limiting 25 kHz chan
Midland Radio Corp.
71-3110B
5000
4000
3000
2000
1000
0
Deviation
-71
-61
-51
dBmV
2500 Hz

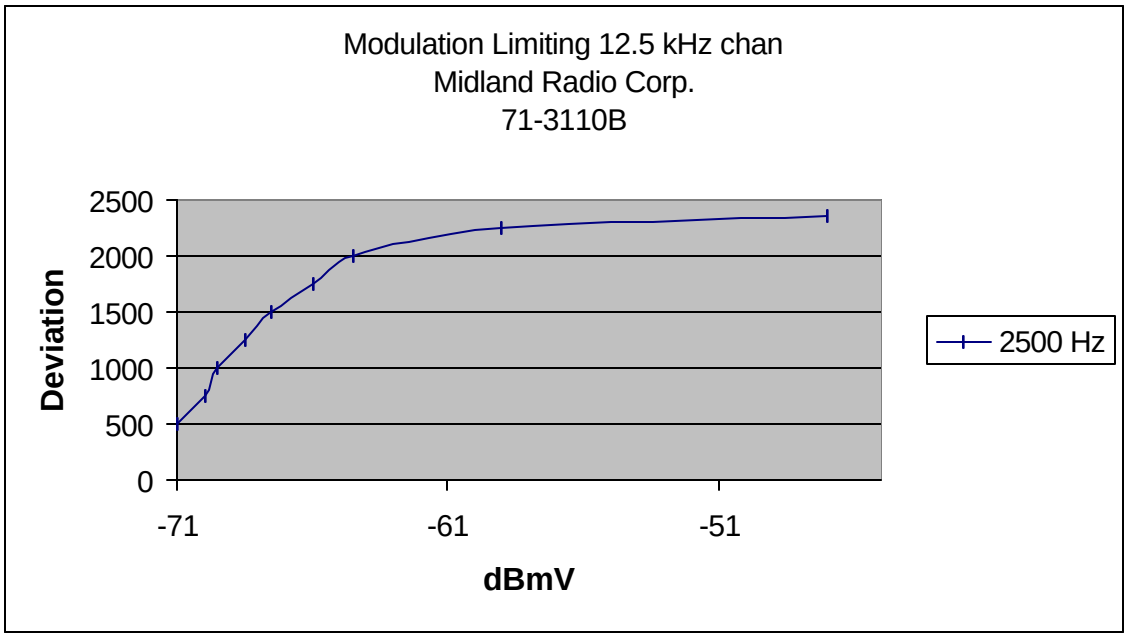
Modulation Limiting 12.5 kHz chan
Midland Radio Corp.
71-3110B
2500
2000
1500
1000
500
0
Deviation
-71
-61
-51
dBmV
2500 Hz

Frequency Response of the Audio Low Pass Filter

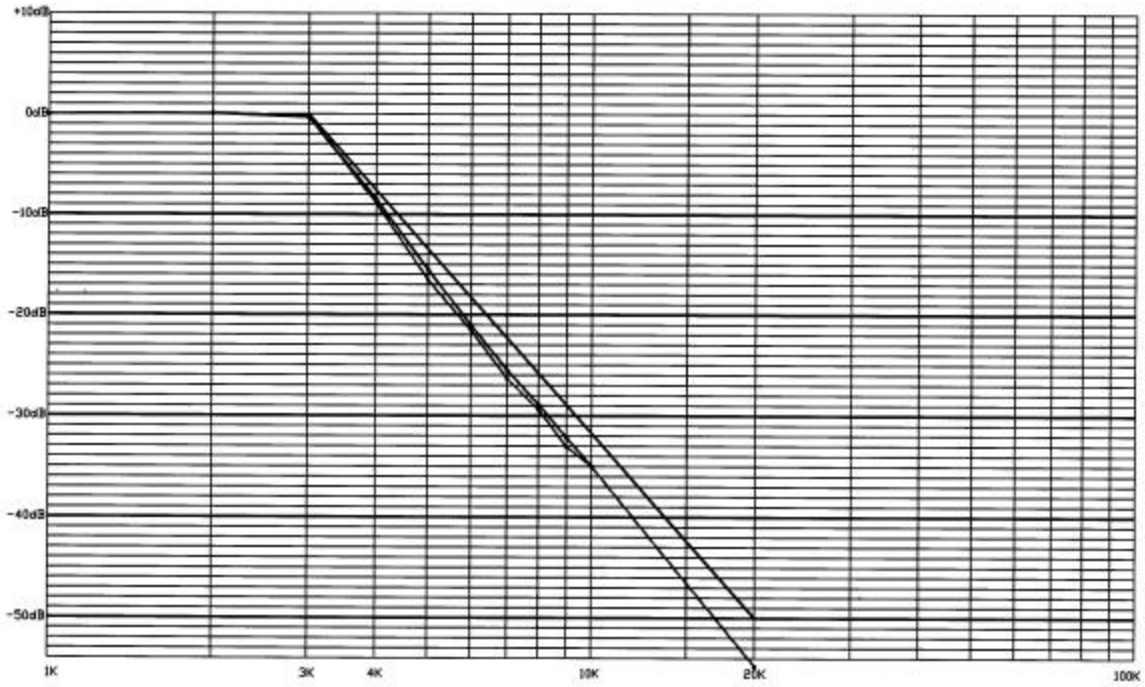

2.1049(c) EMISSION BANDWIDTH:

90.210(b)

Data in the plots shows that the sidebands from greater than 50% to 100% of the authorized bandwidth must be attenuated by at least 25 dB and from 100 to 250% the sidebands must be attenuated by at least 35 dB. Beyond 250% the sidebands must be attenuated by at least 43+log10(TP). The transmitter was modulated with 2500 Hz, adjusted for 50% modulation plus 16 dB. The spectrum analyzer was set with the unmodulated carrier at the top of the screen. The test procedure diagram follows. See the occupied bandwidth plots; pages 11, 12.

Radiotelephone transmitter with modulation limiter.

Test procedure diagram

OCCUPIED BANDWIDTH MEASUREMENT

Occupied BW Test Equipment Setup

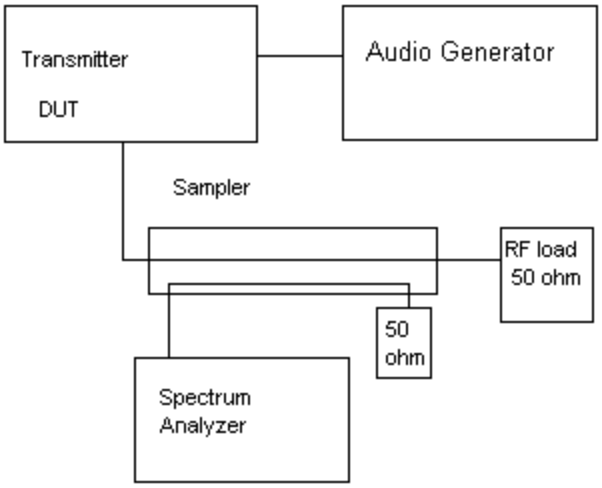

OCCUPIED BANDWIDTH PLOT – CW

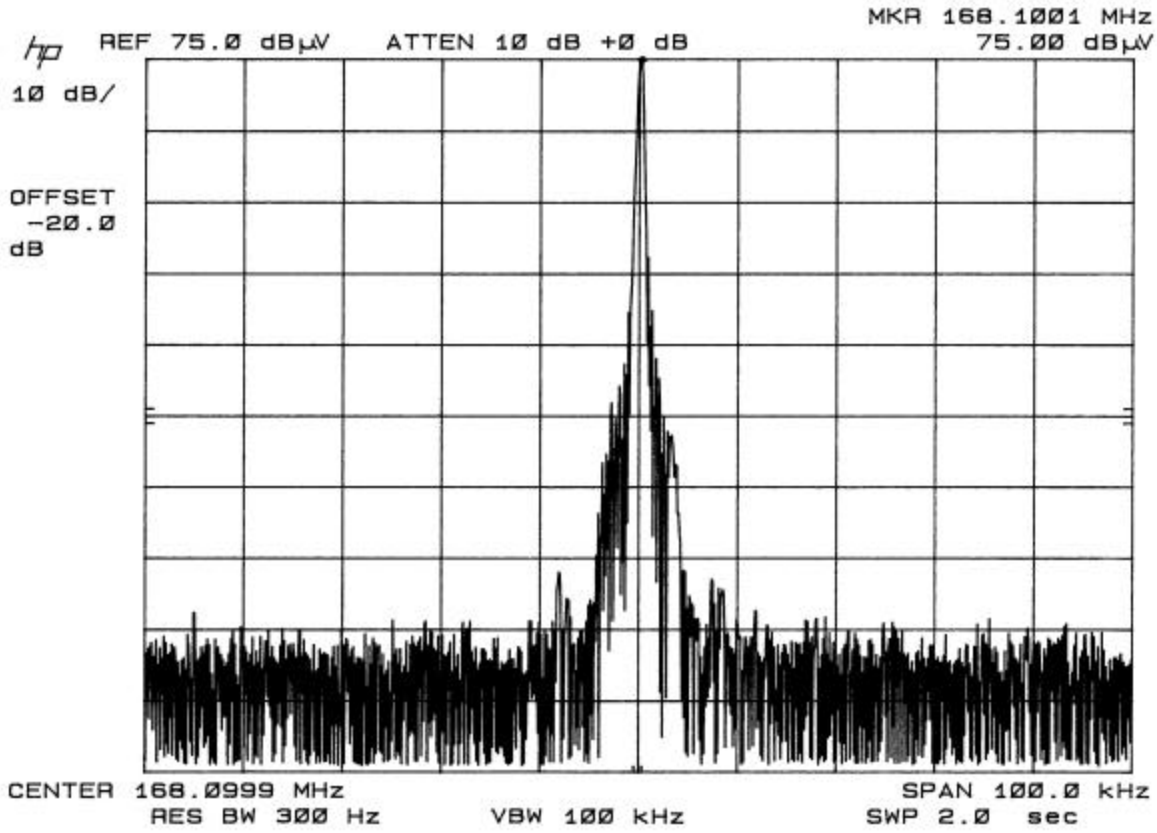

OCCUPIED BANDWIDTH PLOT – 25 kHz

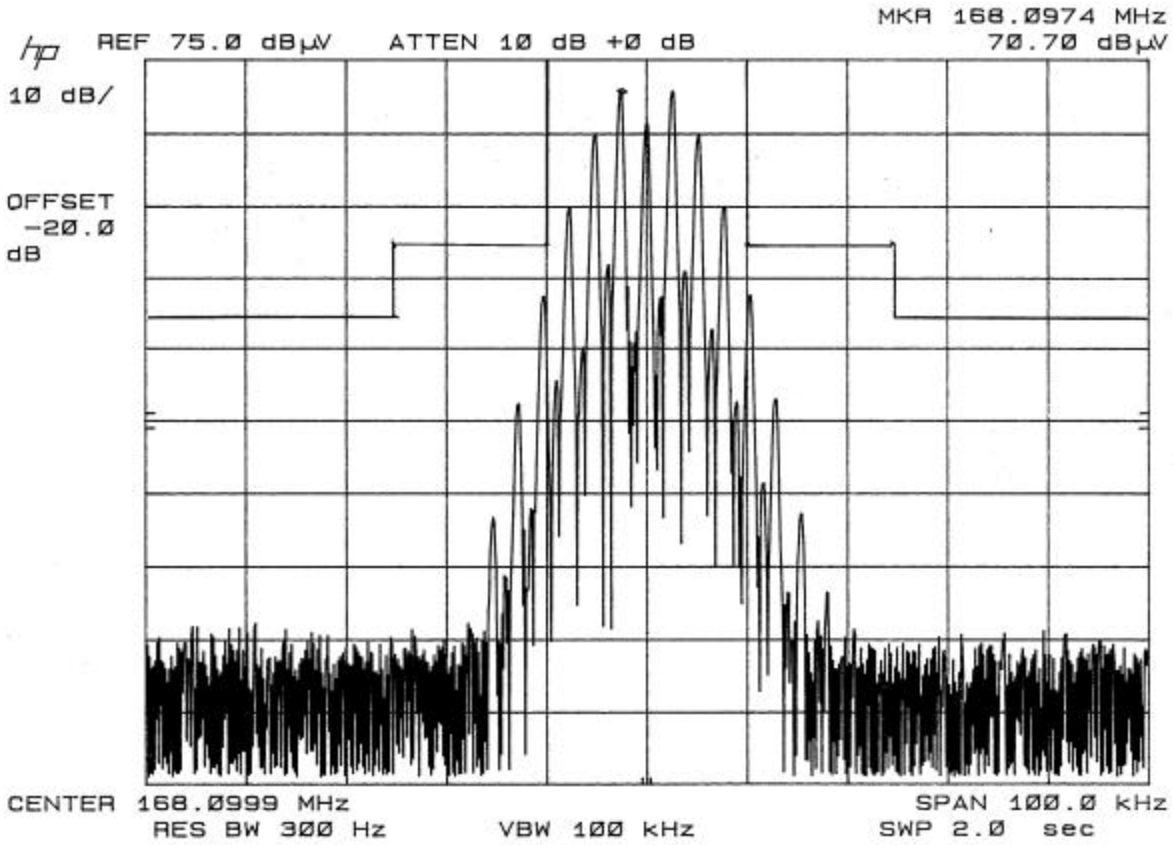

OCCUPIED BANDWIDTH PLOT – 12.5 kHz

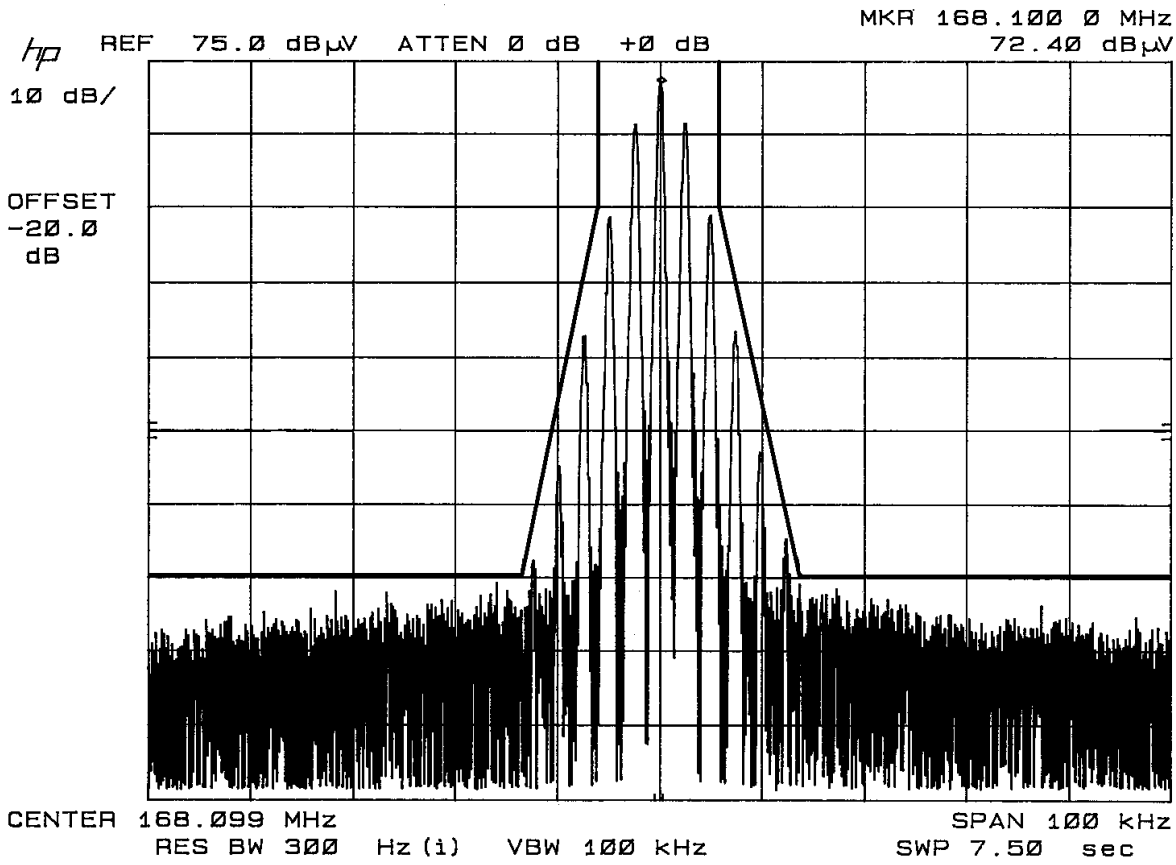

2.1051 Spurious emissions at antenna terminals(conducted): Data on the following page shows the level of conducted spurious responses. The carrier was modulated 100% using a 2500 Hz tone. The spectrum was scanned from 0.4 to at least the 10th harmonic of the fundamental. The measurements were made in accordance with standard TIA/EIA-603.

REQUIREMENTS: Emissions must be 43 +10log(Po) dB below the mean power output of the transmitter.

FOR 25 kHz:
HIGH POWER: 43+10LOG(110) = 63.4 dB
LOW POWER: 43+10LOG(70) = 61.5 dB

Emission Frequency MHz	dB Below Carrier Low Power	dB Below Carrier High Power
173.9	0	0
347.9	84.8	85.1
521.9	94.3	92.9
695.9	105.9	105.2
869.8	105.4	105
1043.8	154.0	96.5
1217.8	86.7	86.9
1391.0	154	154.3

FOR 12.5 kHz:
HIGH POWER: 50+10LOG(110) = 70.4 dB
LOW POWER: 50+10LOG(70) = 68.5dB

Emission Frequency MHz	dB Below Carrier Low Power	dB Below Carrier High Power
173.9	0	0
347.9	84.8	85.1
521.9	94.3	92.9
695.9	105.9	105.2
869.8	105.4	105
1043.8	154.0	96.5
1217.8	86.7	86.9
1391.0	154	154.3

Method of Measuring Conducted Spurious Emissions

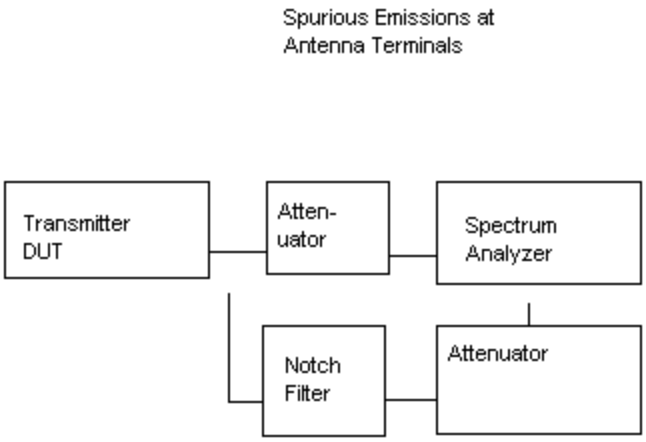

METHOD OF MEASUREMENT: The procedure used was TIA/EIA-603 STANDARD without any exceptions. An audio generator was connected to the UUT through a dummy microphone circuit and the output of the transmitter connected to a standard load and from the standard load through a pre-selector filter of the spectrum analyzer. The spectrum was scanned from 400 kHz to at least the tenth harmonic of the fundamental using a HP model 8566B spectrum analyzer. The measurements were made located at TIMCO ENGINEERING INC. 849 N.W. State Road 45, Newberry, Florida 32669.

2.1053 Field strength of spurious emissions:

NAME OF TEST: RADIATED SPURIOUS EMISSIONS

REQUIREMENTS: Emissions must be 50 +10log(Po) dB below the mean power output of the transmitter for 12.5KHz and 43 +10log(Po) dB for 25 KHz.

TEST DATA:

FOR 25 kHz:
HIGH POWER: 43+10LOG(110) = 63.4 dB
LOW POWER: 43+10LOG(70) = 61.5 dB

HIGH POWER

Emission Frequency MHz	dBc	Margin dB	Generator dBm
173.9	0	0	40.79
347.9	96	32.46	-55.07
521.9	109	46.01	-68.62
695.9	105	41.15	-63.76
1043.8	102	38.33	-60.94
1217.8	93	29.47	-52.08
1391.8	103	39.54	-62.15
1565.7	100	36.80	-59.41
1739.7	103	39.49	-62.1

LOW POWER

Emission Frequency MHz	dBc	Margin dB	Generator dBm
173.9	0.00	0	38.84
347.9	93	31.21	-53.87
521.9	111	68.45	-72.42
695.9	100	38.30	-60.96
869.8	103	41.20	-63.86
1043.8	99	37.48	-60.14
1217.8	91	29.84	-52.5
1391.8	99	128.93	-60.25
1565.7	96	33.95	-56.61
1739.7	100	38.74	-61.4

METHOD OF MEASUREMENTS: The tabulated data shows the results of the radiated field strength emissions test. The spectrum was scanned from 30 MHz to at least the tenth harmonic of the fundamental. This test was conducted per TIA/EIA STANDARD 603 using the substitution method. Measurements were made at the open field test site of TIMCO ENGINEERING, INC. located at 849 NW State Road 45, Newberry, FL 32669.

NAME OF TEST: RADIATED SPURIOUS EMISSIONS

TEST DATA:

FOR 12.5 kHz:
HIGH POWER: 50+10LOG(110) = 70.4 dB
LOW POWER: 50+10LOG(70) = 68.5 dB

HIGH POWER

Emission Frequency MHz	dBc	Margin dB	Generator dBm
173.9	0	0	40.79
347.9	96	32.86	-55.07
521.9	109	46.41	-68.62
695.9	105	41.55	-63.76
1043.8	102	38.73	-60.94
1217.8	93	29.87	-52.08
1391.8	103	39.94	-62.15
1565.7	100	37.20	-59.41
1739.7	103	39.99	-62.1

LOW POWER

Emission Frequency MHz	dBc	Margin dB	Generator dBm
173.9	0.00	0	38.84
347.9	93	30.71	-53.87
521.9	111	49.26	-72.42
695.9	100	37.80	-60.96
869.8	103	40.70	-63.86
1043.8	99	36.98	-60.14
1217.8	91	29.34	-52.5
1391.8	99	37.09	-60.25
1565.7	96	33.45	-56.61
1739.7	100	38.24	-61.4

METHOD OF MEASUREMENTS: The tabulated data shows the results of the radiated field strength emissions test. The spectrum was scanned from 30 MHz to at least the tenth harmonic of the fundamental. This test was conducted per TIA/EIA STANDARD 603 using the substitution method. Measurements were made at the open field test site of TIMCO ENGINEERING, INC. located at 849 NW State Road 45, Newberry, FL 32669.

Test setup diagram for measuring radiated spurious emissions

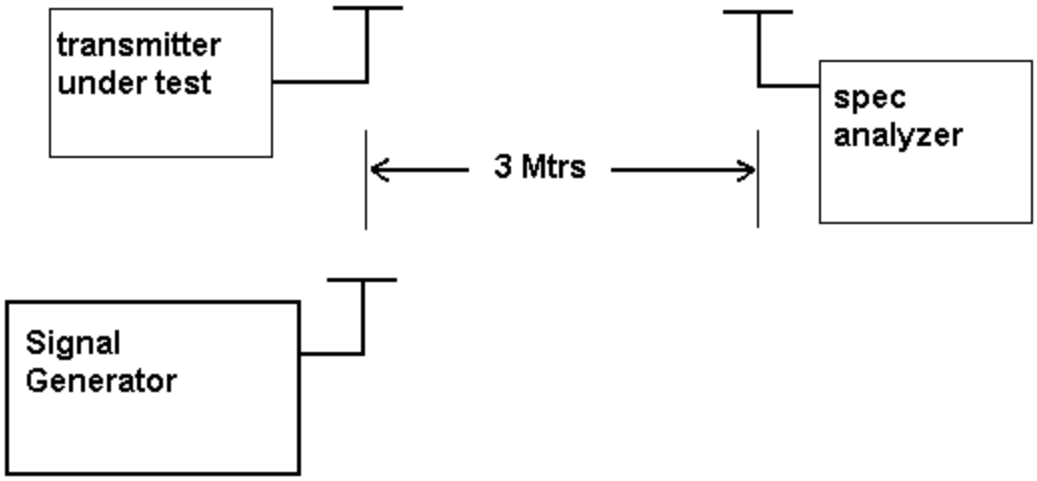

2.1055 Frequency stability:
90.213(a)(1)

Temperature and voltage tests were performed to verify that the frequency remains within the 2.5 ppm specification limit. The EUT was placed in the temperature chamber at 25 degrees C and allowed to stabilize for one hour. The transmitter was keyed ON for one minute during which four frequency readings were recorded at 15 second intervals. The worse case number was taken for temperature plotting. The assigned channel frequency was considered to be the reference frequency. The temperature was then reduced to -30 degrees C after which the transmitter was again allowed to stabilize for one hour. The transmitter was keyed ON for one minute, and again frequency readings were noted at 15 second intervals. The worst case number was recorded for temperature plotting. This procedure was repeated in 10 degree increments up to + 50 degrees C.

Readings were also taken at the end point specified by the manufacturer of 12 Vdc.

MEASUREMENT DATA:

Assigned Frequency (Ref. Frequency): 161.999 940 MHz

TEMPERATURE_°C	FREQUENCY_MHz	PPM
REFERENCE_____	161.999 940	00.0
-30_____	162.000 027	+00.54
-20_____	162.000 026	+00.53
-10_____	162.000 000	+00.37
0_____	161.999 971	+00.19
+10_____	161.999 933	-00.04
+20_____	161.999 930	-00.06
+30_____	161.999 938	-00.01
+40_____	161.999 969	+00.18
+50_____	161.999 968	+00.17
Battery Volts		
-15%	161.999 939	-00.01
+15%	161.999 940	-00.00

RESULTS OF MEASUREMENTS: The maximum frequency variation over the temperature range was +0.54 ppm.

REQUIREMENTS: In the 150-174 Mhz frequency band, transient frequencies must be within the maximum frequency difference limits during the time interval indicated below for 12.5kHz Channels:

Time Interval	Maximum Frequency	Portable Radios 150-174 MHz
t1	+12.5 kHz	5.0 ms
t2	+6.25 kHz	20.0 ms
t3,t4	+12.5 kHz	5.0 ms

TEST PROCEEDURE: TIA/EIA TS603 PARA 2.2.19, the levels were set as follows;

1. Using the variable attenuator the transmitter level was set to 40 dB below the test receivers maximum input level, then the transmitter was turned off.
2. With the transmitter off the signal generator was set 20dB below the level of the transmitter in the above step, this level will be maintained with the signal generator through-out the test.
3. Reduce the attenuation between the transmitter and the RF detector by 30 dB.
4. With the levels set as above the transient frequency behavior was observed & recorded.

2.1055 Frequency stability:
90.214 Transient Frequency Behavior
(Continued)

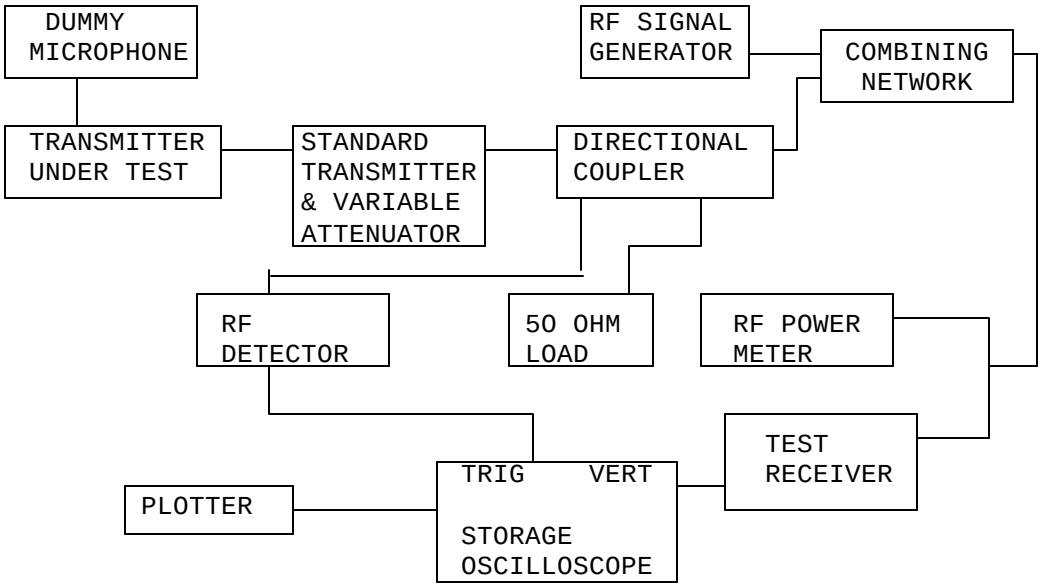

Transient Frequency Plot – 12.5k Low Power On

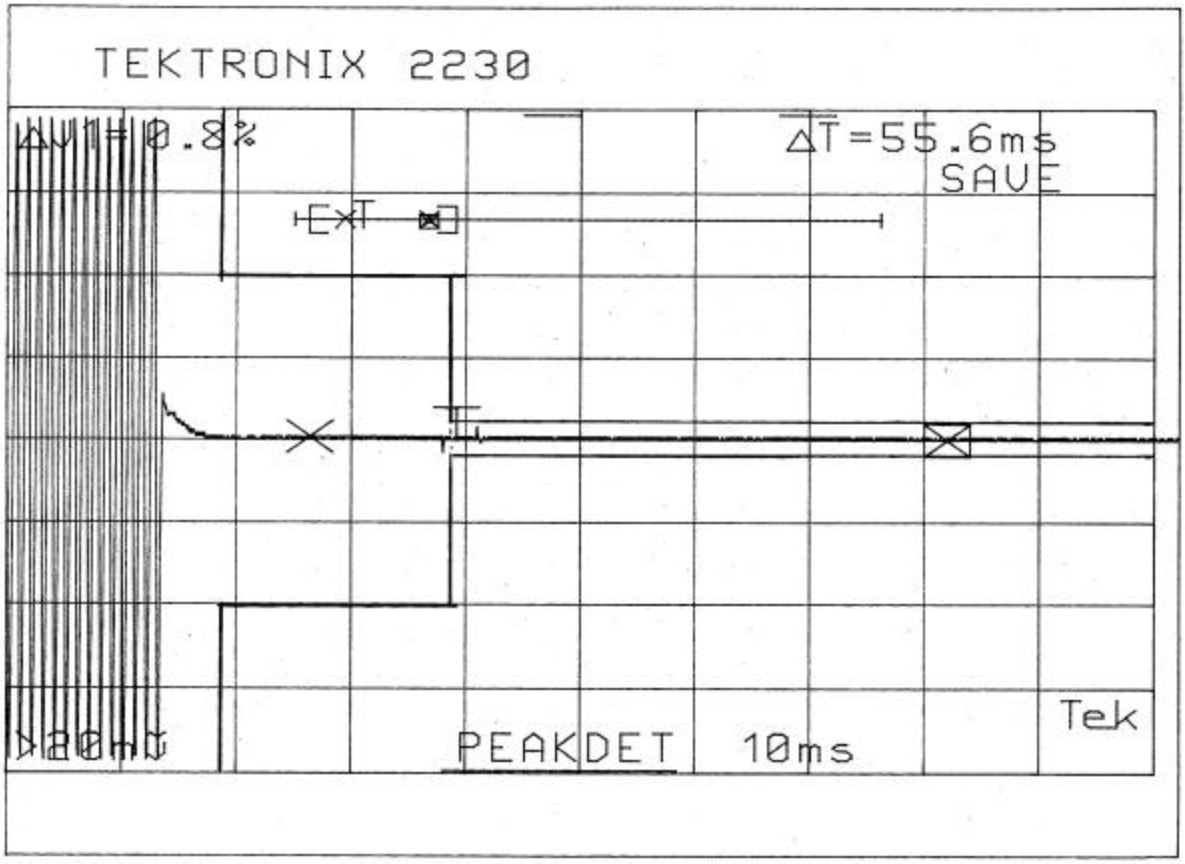

Transient Frequency Plot – 12.5k Low Power Off

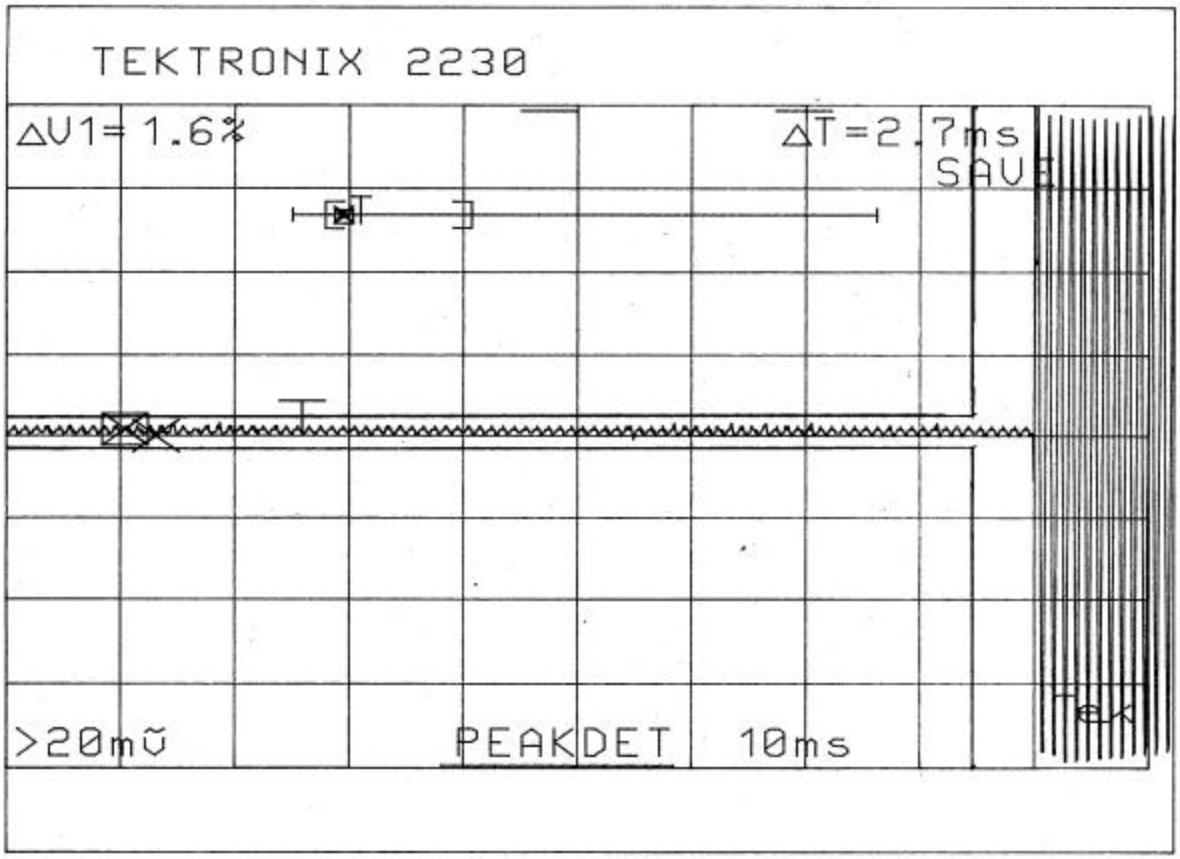

Transient Frequency Plot – 12.5k High Power On

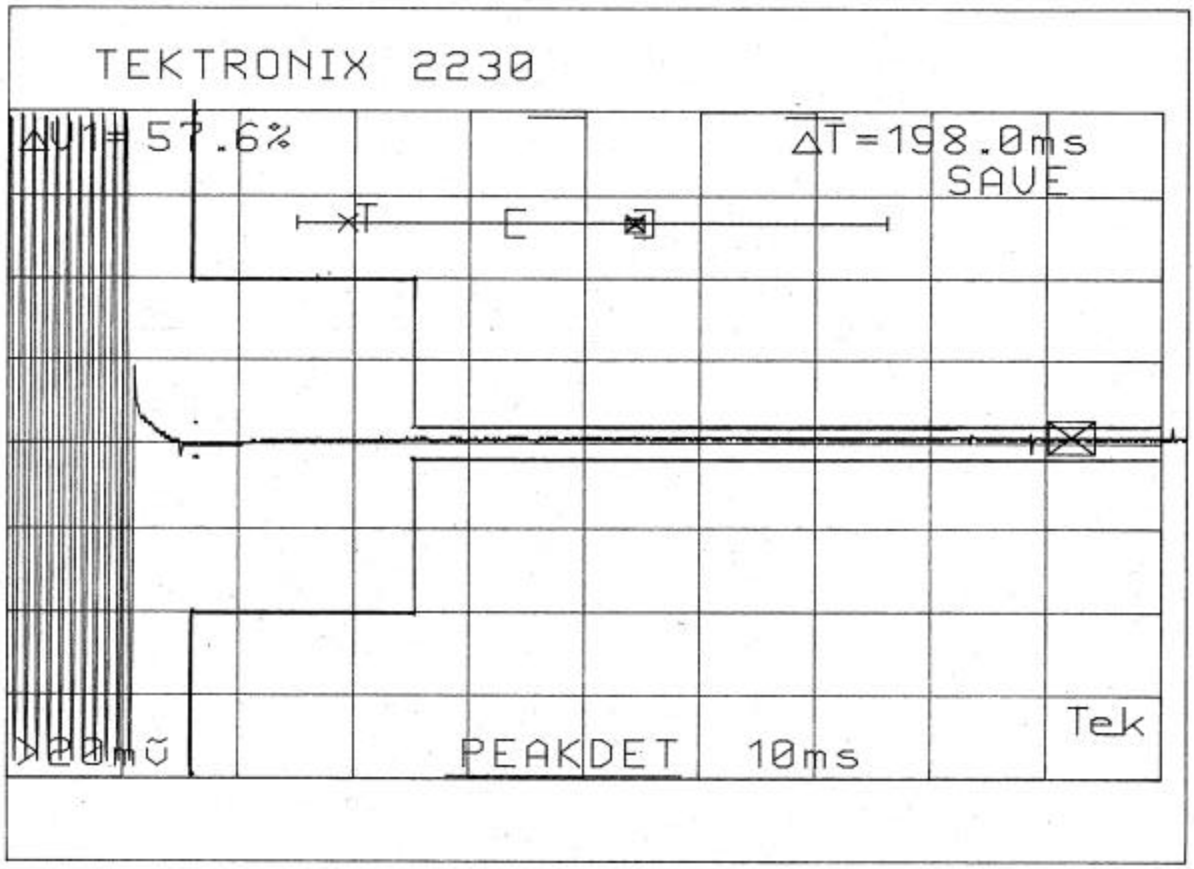

Transient Frequency Plot – 12.5k High Power Off

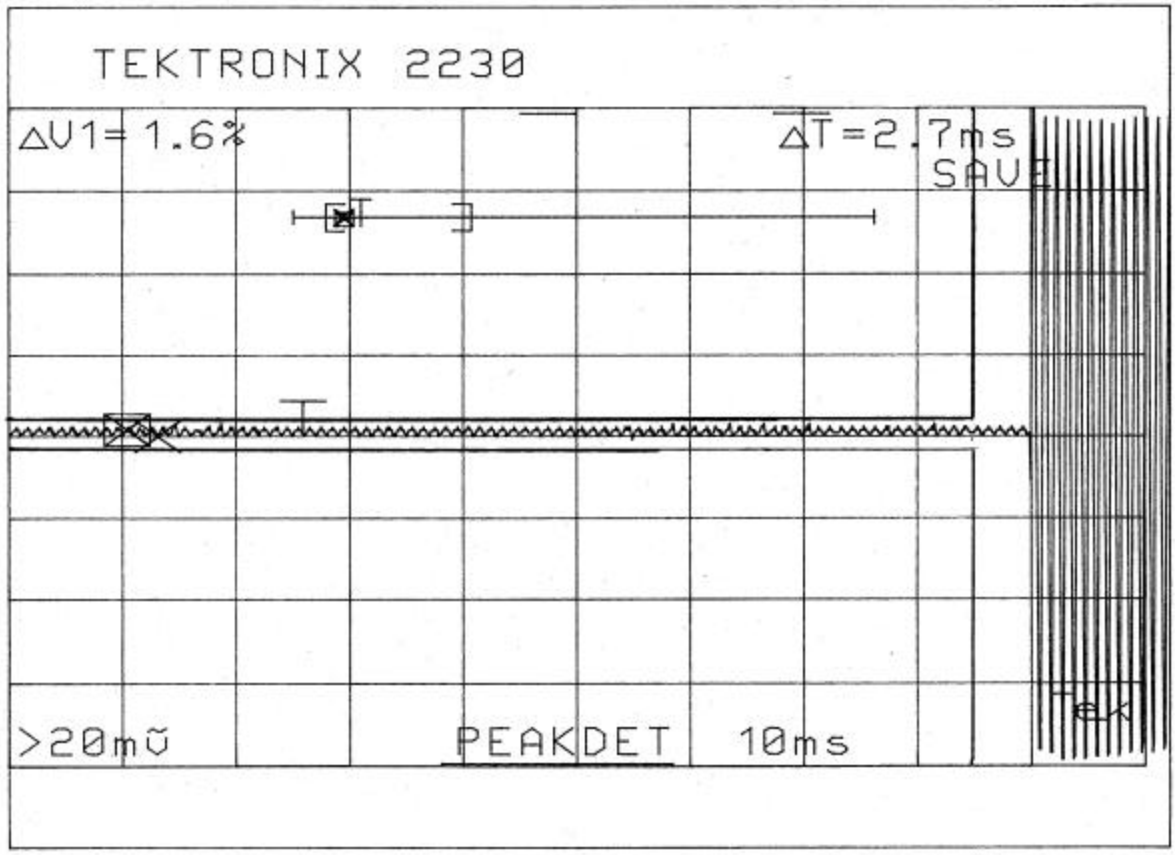

Transient Frequency Plot – 25k High Power – On

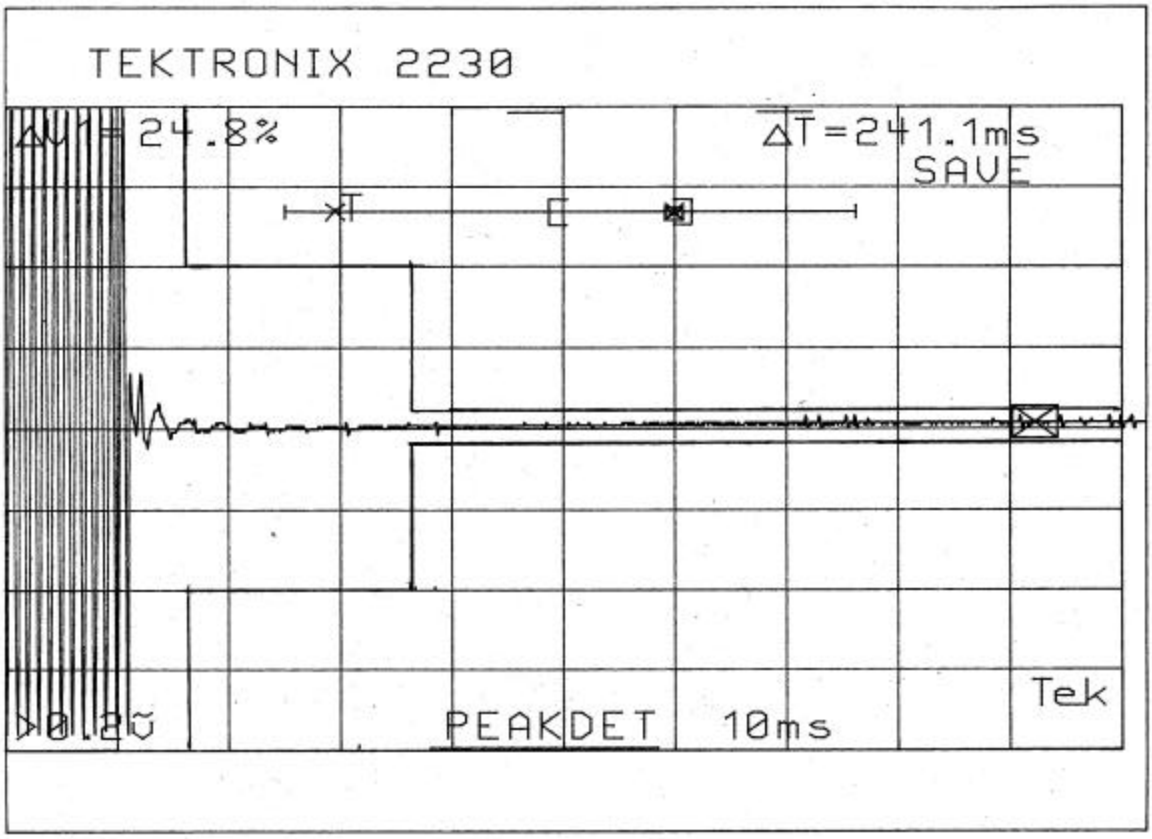

Transient Frequency Plot – 25k High Power – Off

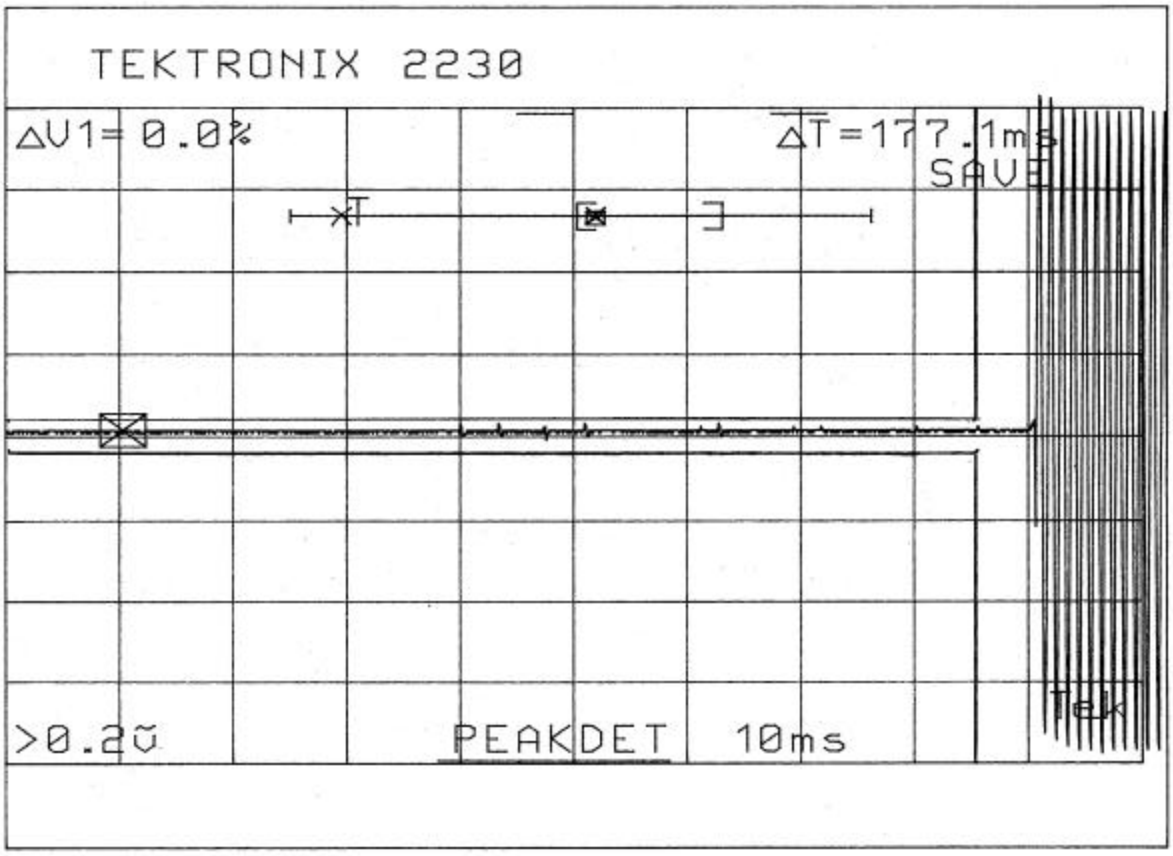

Transient Frequency Plot – 25k Low Power – On

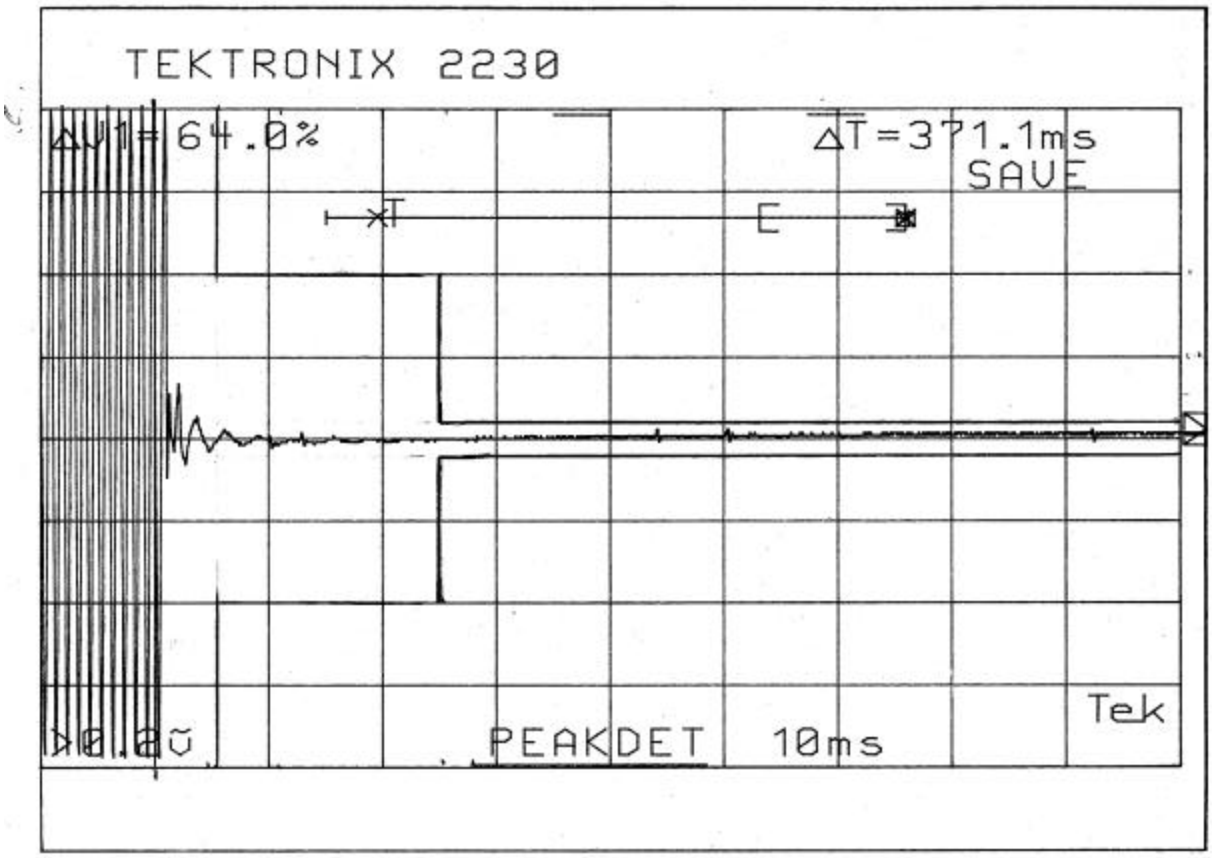

Transient Frequency Plot – 25k Low Power – Off

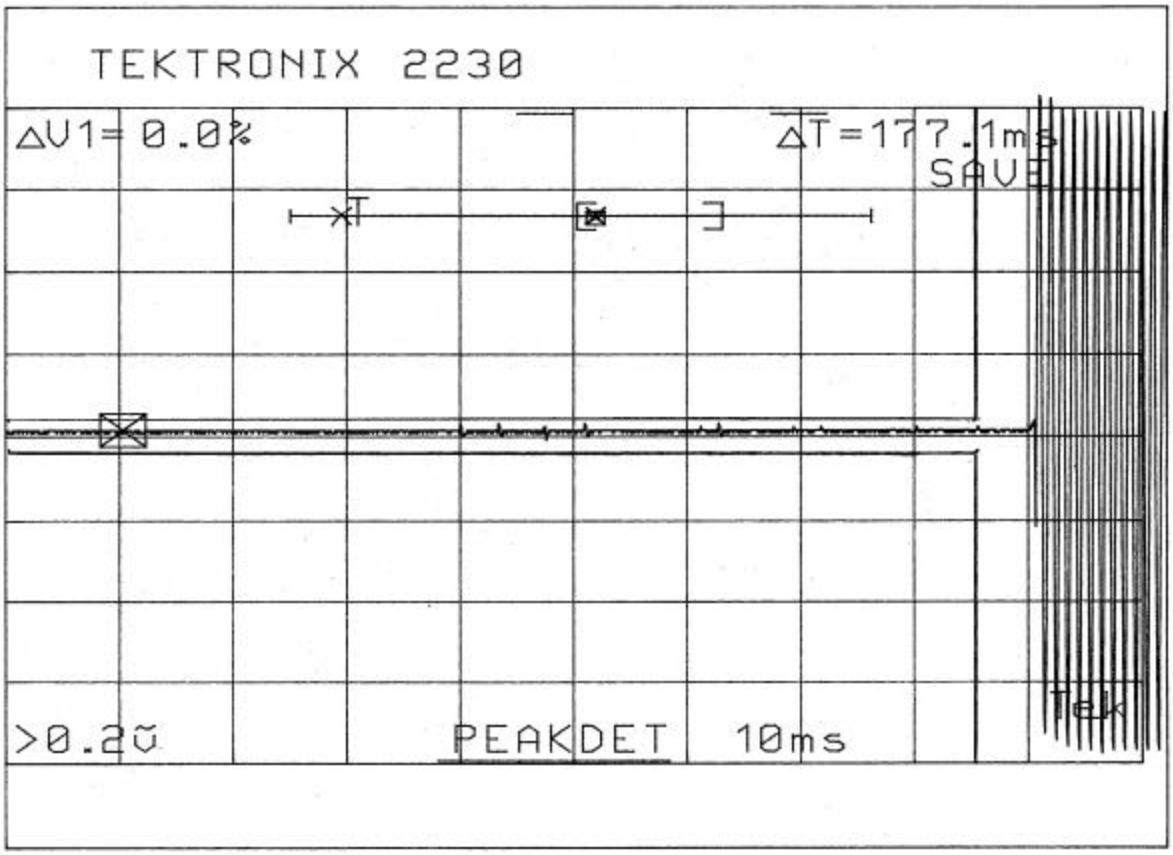

EMC Equipment List

	DEVICE	MFGR	MODEL	SERNO	CAL/CHAR DATE	DUE DATE or STATUS
X	3-Meter OATS	TEI	N/A	N/A	Listed 12/22/99	12/22/02
	3/10-Meter OATS	TEI	N/A	N/A	Listed 3/26/01	3/26/04
	Receiver, Beige Tower					
	Spectrum Analyzer (Tan)	HP	8566B Opt 462	3138A07786 3144A20661	CAL 8/31/01	8/31/03
	RF Preselector (Tan)	HP	85685A	3221A01400	CAL 8/31/01	8/31/03
	Quasi-Peak Adapter (Tan)	HP	85650A	3303A01690	CAL 8/31/01	8/31/03
X	Receiver, Blue Tower					
X	Spectrum Analyzer (Blue)	HP	8568B	2928A04729 2848A18049	CHAR 10/22/01	10/22/03
X	RF Preselector (Blue)	HP	85685A	2926A00983	CHAR 10/22/01	10/22/03
X	Quasi-Peak Adapter (Blue)	HP	85650A	2811A01279	CHAR 10/22/01	10/22/03
X	Biconnical Antenna	Electro-Metrics	BIA-25	1171	CAL 4/26/01	4/26/03
	Biconnical Antenna	Eaton	94455-1	1096	CAL 10/1/01	10/1/03
	Biconnical Antenna	Eaton	94455-1	1057	CHAR 3/15/00	3/15/02
	BiconiLog Antenna	EMCO	3143	9409-1043		
X	Log-Periodic Antenna	Electro-Metrics	LPA-25	1122	CAL 10/2/01	10/2/03
	Log-Periodic Antenna	Electro-Metrics	EM-6950	632	CHAR 10/15/01	10/15/03
	Log-Periodic Antenna	Electro-Metrics	LPA-30	409	CHAR 10/16/01	10/16/03
	Dipole Antenna Kit	Electro-Metrics	TDA-30/1-4	152	CAL 3/21/01	3/21/04
	Dipole Antenna Kit	Electro-Metrics	TDA-30/1-4	153	CHAR 11/24/00	11/24/03

	DEVICE	MFGR	MODEL	SERNO	CAL/CHAR DATE	DUE DATE or STATUS
	Double-Ridged Horn Antenna	Electro-Metrics	RGA-180	2319	CAL 12/19/01	12/19/03
	Horn Antenna	Electro-Metrics	EM-6961	6246	CAL 3/21/01	3/21/03
	Horn Antenna	ATM	19-443-6R	None	No Cal Required	
	Passive Loop Antenna	EMC Test Systems	EMCO 6512	9706-1211	CHAR 7/10/01	7/10/03
	Line Impedance Stabilization . . .	Electro-Metrics	ANS-25/2	2604	CAL 10/9/01	10/9/03
	Line Impedance Stabilization . . .	Electro-Metrics	EM-7820	2682	CAL 3/16/01	3/16/03
	Termaline Wattmeter	Bird Electronic Corporation	611	16405	CAL 5/25/99	5/25/01
	Termaline Wattmeter	Bird Electronic Corporation	6104	1926	CAL 12/12/01	12/12/03
	Oscilloscope	Tektronix	2230	300572	CHAR 2/1/01	2/1/03
X	Temperature Chamber	Tenney Engineering	TTRC	11717-7	CHAR 1/22/02	1/22/04
X	AC Voltmeter	HP	400FL	2213A14499	CAL 10/9/01	10/9/03
	AC Voltmeter	HP	400FL	2213A14261	CHAR 10/15/01	10/15/03
	AC Voltmeter	HP	400FL	2213A14728	CHAR 10/15/01	10/15/03
X	Digital Multimeter	Fluke	77	35053830	CHAR 1/8/02	1/8/04
	Digital Multimeter	Fluke	77	43850817	CHAR 1/8/02	1/8/04
	Digital Multimeter	HP	E2377A	2927J05849	CHAR 1/8/02	1/8/04
	Multimeter	Fluke	FLUKE-77-3	79510405	CAL 9/26/01	9/26/03
	Peak Power Meter	HP	8900C	2131A00545	CHAR 1/26/01	1/26/03
	Digital Thermometer	Fluke	2166A	42032	CAL 1/16/02	1/16/04

	DEVICE	MFGR	MODEL	SERNO	CAL/CHAR DATE	DUE DATE or STATUS
	Thermometer	Traulsen	SK-128		CHAR 1/22/02	1/22/04
X	Temp/Humidity gauge	EXTech	44577F	E000901	CHAR 1/22/02	1/22/04
	Frequency Counter	HP	5352B	2632A00165	CAL 11/28/01	11/28/03
	Power Sensor	Agilent Technologies	84811A	2551A02705	CAL 1/26/01	1/26/03
	Service Monitor	IFR	FM/AM 500A	5182	CAL 11/22/00	11/22/02
	Comm. Serv. Monitor	IFR	FM/AM 1200S	6593	CAL 5/12/02	5/12/04
	Signal Generator	HP	8640B	2308A21464	CAL 11/15/01	11/15/03
	Modulation Analyzer	HP	8901A	3435A06868	CAL 9/5/01	9/5/03
	Near Field Probe	HP	HP11940A	2650A02748	CHAR 2/1/01	2/1/03
	BandReject Filter	Lorch Microwave	5BR4-2400/ 60-N	Z1	CHAR 3/2/01	3/2/03
	BandReject Filter	Lorch Microwave	6BR6-2442/ 300-N	Z1	CHAR 3/2/01	3/2/03
	BandReject Filter	Lorch Microwave	5BR4-10525/ 900-S	Z1	CHAR 3/2/01	3/2/03
	High Pas Filter	Microlab	HA-10N		CHAR 10/4/01	10/4/03
	Audio Oscillator	HP	653A	832-00260	CHAR 3/1/01	3/1/03
	Frequency Counter	HP	5382A	1620A03535	CHAR 3/2/01	3/2/03
	Frequency Counter	HP	5385A	3242A07460	CHAR 12/11/01	12/11/03
	Preamplifier	HP	8449B-H02	3008A00372	CHAR 3/4/01	3/4/03
	Amplifier	HP	11975A	2738A01969	CHAR 3/1/01	3/1/03
	Egg Timer	Unk			CHAR 8/31/01	8/31/03

	DEVICE	MFGR	MODEL	SERNO	CAL/CHAR DATE	DUE DATE or STATUS
	Measuring Tape, 20M	Kraftixx	0631-20		CHAR 2/1/02	2/1/04
	Measuring Tape, 7.5M	Kraftixx	7.5M PROFI		2/1/02	2/1/04
	Coaxial Cable #51	Insulated Wire Inc.	NPS 2251-2880	Timco #51	CHAR 1/23/02	1/23/04
	Coaxial Cable #64	Semflex Inc.	60637	Timco #64	CHAR 1/24/02	1/24/04
	Coaxial Cable #65	General Cable Co.	E9917 RG233/U	Timco #65	CHAR 1/23/02	1/23/04
	Coaxial Cable #106	Unknown	Unknown	Timco #106	CHAR 1/23/02	1/23/04