MIDLAND®

X-TRA TALK GXT1000/1030/1040/1050/1191 SERIES

GXT SERIES

midlandusa.com

THIS PAGE IS INTENTIONALLY LEFT BLANK

Welcome to the world of Midland electronics

Congratulations on your purchase of a high quality MIDLAND product. Your 2-way radio represents state-of-the-art high-tech engineering. Designed for GMRS (General Mobile Radio Service) operation, this compact package is big on performance. It is a quality piece of electronic equipment, skillfully constructed with the finest components. The circuitry is all solid-state and mounted on a rugged printed circuit board. Your two-way radio is designed for reliable and trouble-free performance for years to come.

Features

- 22 GMRS Channels
- 28 Midland Preset Channels
- 142 Privacy Codes (38 CTCSS / 104 DCS)
- Waterproof JIS4 Standard
- Group Call
- Direct Call
- VOX
- Selectable Call Alert (5 additional Animal Sounds on GXT1050)
- NOAA Weather Radio
- NOAA Weather Alert
- NOAA Weather Scan
- Dual Watch
- Vibrate Alert
- Monitor Function
- Roger Beep Tone
- Silent Operation
- Keypad Lock
- Whisper Function
- SOS Siren
- Power HI/MED/LO Settings
- Speaker / Microphone Jacks
- Battery Meter / Battery Low Indicator

This device complies with Part 15 of the FCC Rules. Operation is subject to the following two conditions: (1) this device does not cause harmful interference, and (2) this radio must accept any interference that may cause undesired operation. To maintain compliance with FCC's RF exposure guidelines, for body-worn operation, this radio has been tested and meets the FCC RF exposure guidelines when used with Midland Radio Corp. accessories supplied or designated for this product. Use of other accessories may not ensure compliance with FCC RF exposure guidelines.

IMPORTANT NOTICE, FCC LICENSE REQUIRED FOR GMRS OPERATION (Only Applicable for GMRS Radio Use in the United States)

The radios operate on GMRS (General Mobile Radio Service) frequencies which require an FCC (Federal Communications Commission) license. You must be licensed prior to operating the radio. Serious penalties could result from unlicensed use of GMRS channels, in violation of FCC rules, as stipulated in the Communications Acts Sections 501 and 502 (amended).

You will be issued a call sign by the FCC which should be used for station identification when operating the radio on GMRS channels. You should also cooperate by engaging in permissible transmissions only, avoiding channel interference with other GMRS users, and being prudent with the length of your transmission time.

To obtain a license or ask questions about the license application, contact the FCC at 1-888-CALL FCC or go to the FCC's website:
http://www.fcc.gov and request form **605**.

Exposure To Radio Frequency Energy

Your Midland radio is designed to comply with the following national and international standards and guidelines regarding exposure of human beings to radio frequency electromagnetic energy:

- United States Federal Communications Commission, Code of Federal Regulations: 47 CFR part 2 sub-part J
- American National Standards Institute (ANSI)/Institute of Electrical & Electronic Engineers (IEEE) C95. 1-1992
- Institute of Electrical and Electronic Engineers (IEEE) C95. 1-1999 Edition
- National Council on Radiation Protection and Measurements (NCRP) of the United States, Report 86, 1986
- International Commission on Non-Ionizing Radiation Protection (ICNIRP) 1998

To control your exposure and ensure compliance with the general population or uncontrolled environment exposure limits, transmit no more than 50% of the time. The radio generates measurable RF energy exposure only when transmitting.

Body-Worn Operation

If you wear the radio on your body when transmitting always use a Midland-supplied or approved belt clip, holster, case, or body harness for this product. Use of any accessories not supplied or approved by Midland may cause RF exposure in excess of the FCC RF exposure guidelines.

RF Exposure Information

This product was tested for use next to the face with a minimum separation distance of 25mm (1 inch) and next to the body (belt clip with headset) with the minimum separation distance of 0mm (0 inches). The highest SAR value recorded during testing complies with FCC RF Exposure requirements. SAR test reports are available on the FCC website https://apps.fcc.gov/oetcf/eas/reports/GenericSearch.cfm by searching for the applicable FCC ID.

This transmitter must not be collocated or operated in conjunction with any other antenna or transmitter.

LCD DISPLAY

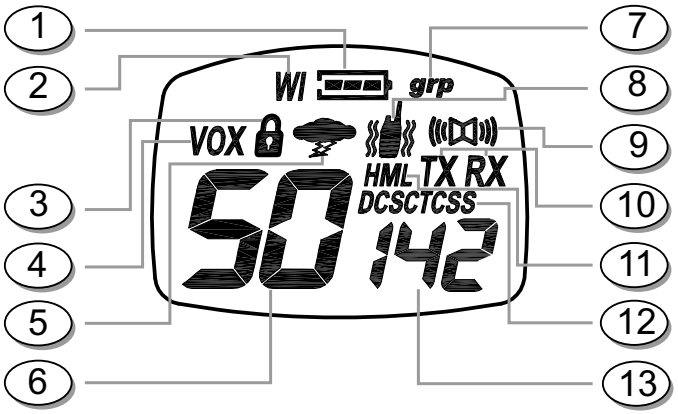

1. **BATTERY METER** – Indicates the battery level.
2. **WHISPER ICON** – Indicates when the Whisper feature is on.
3. **KEY LOCK ICON** – Indicates KEY LOCK mode is on.
4. **VOX ICON** – Indicates when VOX mode is active.
5. **NOAA WEATHER (WX) BAND ICON** – Indicates when the radio is in Weather Band mode.
6. **CHANNEL NUMBER** – Changes from 1~50 on GMRS band (1~10 on WX band).
7. **GROUP MODE ICON** – Indicates when the Group Mode is on.
8. **VIBRATE ALERT ICON** – Indicates when the Vibrate-Alert feature is on.
9. **SOS SIREN ICON** – Indicates the SOS Siren is on.
10. **TRANSMIT (TX) / RECEIVE (RX) ICON** – Indicates radio is transmitting (TX) a signal, or radio is receiving (RX) a transmission.
11. **TRANSMIT POWER LEVEL ICON** – Indicates TX Power setting (H/M/L)
12. **PRIVACY CODE ICON** – Indicates Privacy Code setting (CTCSS/DCS).
13. **PRIVACY CODE** – Indicates Privacy Code selected by user (oF~38/oF~104). It can only be used on Ch 1~22.

CONTROLS

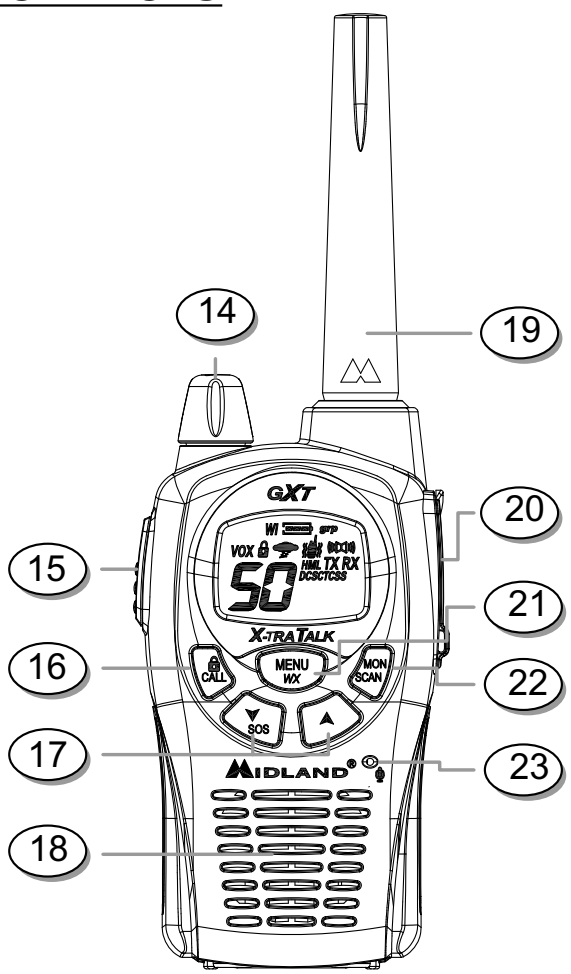

14. **POWER/VOLUME KNOB** – Turn clockwise to turn the power on and increase the volume level. Turn counter-clockwise to decrease the volume level and turn the power off.
15. **PTT Button** – Press and hold to transmit voice communication.
16. **CALL/LOCK Button** – Press to send a CALL ALERT signal. Press and hold to turn KEY LOCK on/off.
17. **UP ▲ and DOWN ▼ / SOS SIREN Buttons** – Make adjustments in MENU mode. Press and hold the DOWN button for 5 seconds to activate the SOS Siren function.
18. **SPEAKER** – Built-in speaker.
19. **ANTENNA**
20. **EXTERNAL SPEAKER/MIC JACK**
21. **MENU/WX SCAN Button** – Press to access Menu mode. Press and hold for 5 seconds to activate the NOAA Weather Scan function.
22. **MONITOR/SCAN Button** – Press to enter SCAN mode. Press and hold to enter MONITOR mode.
23. **MIC** – Built-in microphone.

BATTERY INSTALLATION

Your radio operates with either a NiMH battery pack or optional 4 AA alkaline batteries. The belt clip should be removed (see below) to ease installation or removal of the batteries.

To install the batteries:

1. With the back of the radio facing you, remove the belt clip (see diagram below) for easy access, then remove the Battery Cover by pulling down the Battery Cover Latch and lifting up the Battery Cover from the radio.
2. Insert 4 AA batteries observing the polarity as shown. Installing the batteries incorrectly will prevent the radio from operating or may damage the radio.
3. Return the Battery Cover by sliding it up on the radio and push up the Battery Cover Latch until it locks into place. Replace the belt clip, making sure it locks into place.

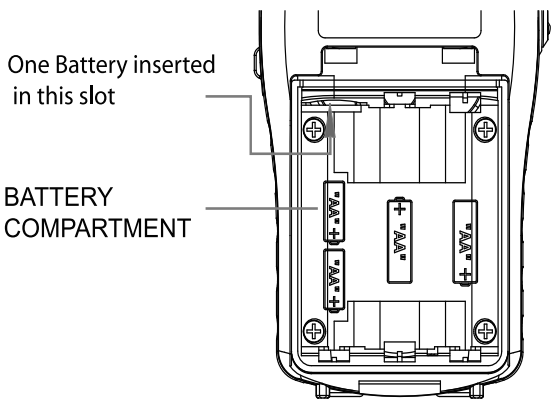

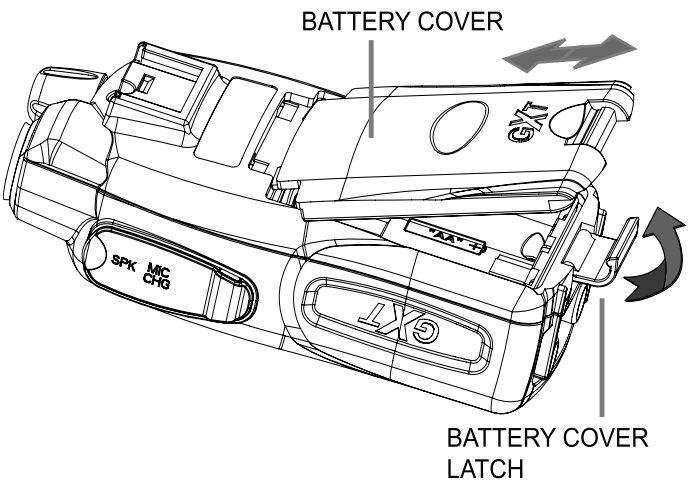

INSTALLING THE BELT CLIP

To install the **BELT CLIP**, slide the clip down into the slot on the back of the radio until the **BELT CLIP LATCH** clicks. To remove the **BELT CLIP**, press the **LOCK TAB** down, then gently pull the belt clip up toward the top of the radio.

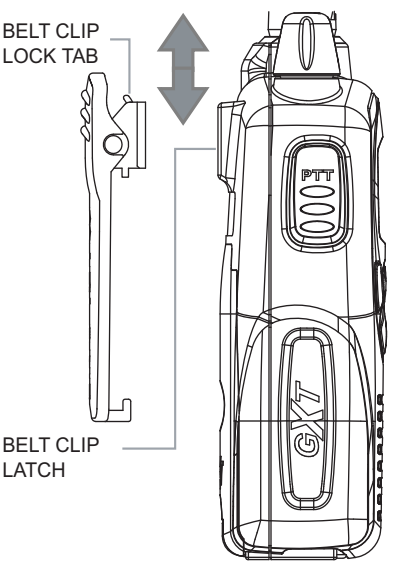

CHARGING THE BATTERY PACK

Your radio is equipped for using a rechargeable NiMH battery pack which can be recharged using a desktop charger. Initial charge time is 24 hours with a charge time of 12 hours thereafter. For maximum battery life, we recommend charging the battery pack when the low battery icon comes on. Remove the radios from the charger when the charge time expires.

To charge using a Desktop Charger:

1. Place the rechargeable battery packs in the radios.
2. Connect the AC adapter into an AC wall outlet.
3. Insert the AC adapter plug (or DC Cigarette Lighter adapter if charging in vehicle) into the desktop charger jack.
4. Place the units into the desktop charger slot and note that the LED indicator will be red, indicating the radio is charging.
   In order to ensure that the battery pack is fully charged, it is recommended that the battery pack be charged for at least 12 hours with the radio turned OFF.

!

1. Only use the Midland NiMH battery pack.
2. Do not attempt to charge alkaline batteries or any batteries or battery packs other than the one indicated in the manual. This may cause leakage and damage to the radio.
3. For long term storage of the radio, turn the radio OFF and remove the batteries from the radio.

BATTERY LEVEL INDICATOR

Your radio has a **BATTERY LEVEL METER** that shows the battery power level. The greater the number of bars visible, the stronger the battery level. When the battery level is low, the ***Battery Shell*** icon and ***"Lo bt"*** will flash in the display indicating your batteries should be replaced or recharged if using a rechargeable battery pack.

!

Note: Do Not Mix Old and New Batteries.

Note: Do Not Mix Alkaline, Standard, or Rechargeable Batteries.

OPERATING YOUR RADIO

POWER ON/OFF AND VOLUME

Rotate the **POWER/VOLUME** knob clockwise to turn the radio on and increase the volume level. Rotate the control counter-clockwise to reduce the volume level and to turn the radio off. During Power On, the radio will beep 2 times with different tones, the LCD will display all icons for 1 second and the LCD display will indicate the last channel selected.

TRANSMITTING AND RECEIVING A CALL

To communicate, all radios in your group must be set to the same channel and Privacy Code.

1. For maximum clarity, hold the radio 2 to 3 inches from your mouth.
2. Press and hold the **PTT** button and speak in a normal voice into the **microphone**. The **TX** icon will appear continuously on the LCD display while transmitting.
3. To receive a call, release the **PTT** button. The **RX** icon will appear on the display when your radio is receiving a transmission.

ABOUT RANGE

Your GXT Series radios are designed to give you maximum range under optimum conditions.

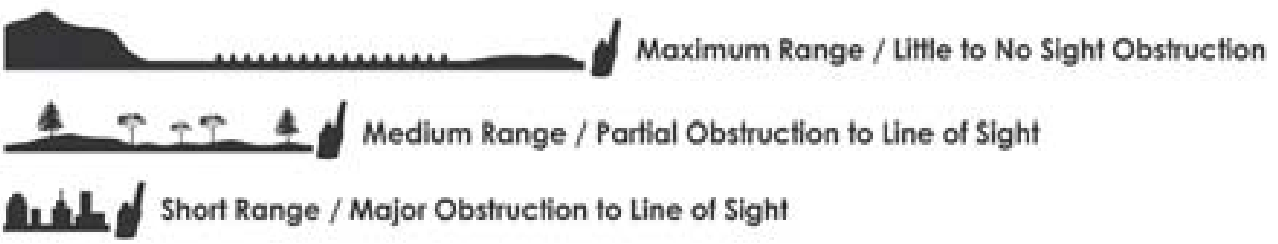

Optimum Conditions are:

- Over water
- Open rural areas without obstructions
- Flat areas where you can see the other person

To ensure you get maximum range:

- Be sure to use fresh or fully charged batteries - low batteries will cause low power conditions.
- Be sure you are on a GMRS only channel - channels 8 through 14 are restricted by the FCC to low power.
- Be sure to set your radio to use Hi power.

GXT1000/1030/1040/1050/1191 SERIES QUICK REFERENCE CHART

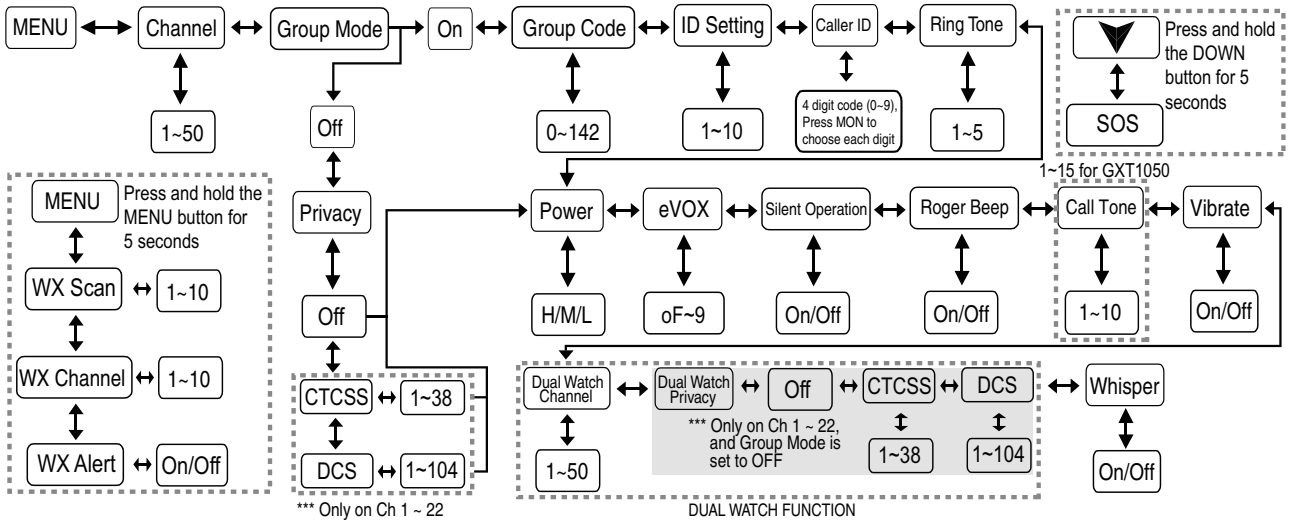

MONITOR

Pressing and holding the **MONITOR** button for 1 second will let you hear noise so you can adjust the volume level of the radio when not receiving a signal. This should be used to check activity on your current channel before transmitting. Press and hold the **MONITOR** button for 1 second again to get out of **MONITOR** mode.

SCAN

Your radio can scan all 50 channels for activity. To enter, quickly press the **SCAN** button. Repeat the same procedure to exit. Your radio will rapidly scan each of the 50 channels and stop on any active channel. Your radio will resume scanning after 4 seconds when the channel is no longer active.

When you press the **PTT** button to transmit on an active channel, the scanning function will stop and remain on the active channel for 10 seconds before resuming scan when **PTT** button is no longer pressed.

To resume scanning, quickly press the ▲\▼ button.

CALL ALERT

Your radio can transmit a call alert for a fixed length of time. To send a call alert, press the **CALL** button. The **TX** icon will appear while transmitting a call alert and a tone can be heard on the speaker for confirmation.

The GXT1000/1030/1040/1191 has 10 call alert selections while the GXT1050 has 15 call alerts including 5 ***"animal sound"*** call alerts - Cougar, Duck, Crow, Wolf, and Turkey.

SOS SIREN

To activate the **SOS SIREN** function, press and hold the **DOWN/ SOS SIREN** button for 5 seconds. The icon will appear on the display, the radio will send out a loud siren sound and the display will flash. To deactivate the **SOS SIREN** function press the **PTT** button twice.

Warning: The SOS Siren is to be used only in the event of an emergency. Midland Radio Corporation is not responsible if there is no response to the SOS Siren.

KEYPAD LOCK

To avoid accidentally changing the radio settings, press the **LOCK** button for 2 seconds. The icon will appear on the display. **PTT** and **CALL** will still be active. Repeat the same procedure to unlock the keypad.

DISPLAY ILLUMINATION

During Power on, the display illumination will activate for approx. 5 seconds. The display illumination can also be activated when the **MENU**, **MON/SCAN**, or ▲\▼ buttons are pressed.

CHANNEL SELECTION (GMRS BAND)

Press the **MENU** button once, and then the ▲\▼ buttons to select one of the 50 GMRS channels. To confirm the selection, press the **PTT** button or press the **MENU** button again to move to the next feature setting.

USING THE RADIO IN GROUP MODE

Your radio has a **GROUP MODE** function which lets you make *"**direct calls**"* to other people within the group without alerting the entire group. The **GROUP MODE** function only works on channels 1~22. It does not operate on channels 23~50.

In order to use the **GROUP MODE** function you need to set the following in your radio:

- Set the radio to Group Mode
- Set a Group Code
- Set the ID
- Set the Caller ID
- Set the Ring Tone

***Note**: To communicate between two radios in Group Mode, the radios in your group must be set to the same channel and Group Code selections.The GROUP Mode function only operates on channels 1~22.*

SETTING THE RADIO TO GROUP MODE

To turn the **GROUP MODE** on, press the **MENU** button until the display shows ***"Gr"*** blinking, while an ***"oF"*** appears on the right of the display. Select ***"on"*** by pressing the ▲\▼ buttons and press the **PTT** button to confirm or press the **MENU** button again to move to the next feature setting. When the radio is in **GROUP MODE** the **Group Mode** icon will appear on the display.

SETTING GROUP CODES

Your radio has 142 **Group Codes** available. To select a **Group Code** press the **MENU** button while in Group Mode until the Privacy Code blinks, and then the ▲\▼ buttons to select one of the 142 Group Codes. The **Privacy Code** icon on the display will indicate your Group Code setting. To confirm the selection, press the **PTT** button or press the **MENU** button again to move to the next feature setting.

SETTING THE ID NUMBER

Your radio has 10 **ID Numbers** available. The selected **ID Number** may be different for each **Group Code**. To select an **ID Number** for the current **Group Code** press the **MENU** until the display shows ***"Id,"*** while the current **ID number** setting appears blinking on the right of the display. Press the ▲\▼ buttons to select one of the 10 **ID Numbers**. To confirm the selection, press the **PTT** button or press the **MENU** button again to move to the next feature setting.

SETTING THE CALLER ID NUMBER

You can select your individual 4-digit **Caller ID Number** to indicate you when making ***"direct call"*** to other radios within your group. To set your **Caller ID Number** within the current **channel**, **Group Code** and **ID number** press the **MENU** button while in Group Mode 5 times, and then press the ▲\▼ buttons to select ***"1 ~ 9"*** on each digit. To move to another digit press the **MON/SCAN** button. To confirm the selection, press the **PTT** button or press the **MENU** button again to move to the next feature setting.

SETTING THE RING TONE

Your radio has 5 selectable Ring Tones. Your selected ring tone will be played back when receiving a “direct call” from another person with the same Group Code and ID Number. To select a **Ring Tone** for the current Group Code and ID Number press the **MENU** button until an ***“rt”*** appears on the display, and then the ▲\▼ buttons to make the selection. To confirm the selection, press the **PTT** button or press the **MENU** button again to move to the next feature setting.

MAKING A DIRECT CALL

Your radio has a ***“direct call”*** function which enables you to call another person without alerting the other people within the group.

In order to make a direct call to another radio while in Group Mode, both must have the same channel, Group Code, and ID Number.

To make a ***“direct call”*** press the **CALL** button while in Group Mode, an ***“AL”*** will appear on the display. Press the ▲\▼ buttons to select the **ID Number** of the radio that you will call. Press the **CALL** button again to send the direct call. Only the radio with the same **ID Number** will receive the call.

You can also send a ***“direct call”*** to **all** the radios within the group. Press the **CALL** button while in Group Mode, an ***“AL”*** will appear on the display. Press the **CALL** button again to send the direct call and all the radios within the group will receive the call.

USING THE RADIO IN STANDARD MODE

You can set your radio to Standard Mode to communicate with radios which do not have the Group Mode feature.

SETTING THE RADIO TO STANDARD MODE

To turn the **STANDARD MODE** on, press the **MENU** button until the display shows ***“Gr”*** blinking, while ***“on”*** appears on the right of the display. Select ***“of”*** by pressing the ▲\▼ buttons and press the **PTT** button to confirm or press the **MENU** button again to move to the next feature setting.

When the radio is in **STANDARD MODE** the **Group Mode** icon will disappear from the display.

SETTING PRIVACY CODES

Your radio has 142 **Privacy Codes** available which can only be used on channels 1~22. The selected **Privacy Code** may be different for each channel. To select a **Privacy Code** for the current channel press the **MENU** button three times, and then the ▲\▼ buttons to select between ***"Off/CTCSS/DCS"***. Press the **MENU** button again and the ▲\▼ buttons to select one of the 38 **CTCSS Codes** or one of the 104 **DCS Codes**.

The **Privacy Code** icon on the display will indicate whether you set your Privacy Code in ***CTCSS*** or ***DCS*** mode. To confirm the selection, press the **PTT** button or press the **MENU** button again to move to the next feature setting.

Note : If you select a ***CTCSS*** Privacy Code, any previously selected ***DCS*** Privacy Code will be cancelled and vice-versa.

Selecting a Privacy Code of ***"oF"*** will disable the Privacy feature. To communicate between two radios, all radios in your group must be set to the same channel and/or Privacy Code selections. **The Privacy Code can only be set in channels 1~22**.

TRANSMIT (TX) POWER LEVEL SELECTION

Your radio has 3 power level settings. To select the power level on channels 1~7, 15~33 and 38~50, press the **MENU** button until a "***Pr***" icon will appear blinking on the display. Then press the ▲\▼ buttons to select **TRANSMIT POWER LEVEL** icon, "**H**" for high, "**M**" for medium, and "**L**" for low power. To confirm, press the **PTT** button or press the **MENU** button again to move to the next feature setting. **When the Battery Meter drops to 1 bar , the TX Power will automatically switch from Hi(H) or Med(M) to Lo(L) level.**

Note : You cannot adjust the power setting on channels 8 through 14. These channels are set to Low power per FCC regulations.

VOX (Hands-Free Transmission)

Your radio has 9 VOX level settings: ***(oF/1~9)***.

*To set **VOX***, press the **MENU** button until the display shows "**VOX**". On the right of the **CHANNEL NUMBER** display, an "***oF***" icon appears. Select "***1***" ~ "***9***" by pressing the ▲\▼ buttons and push the **PTT** key, or press the **MENU** button again to move to the next feature setting. **VOX** will be more sensitive on the lower setting than on the higher setting.

*To turn **VOX** off*, press the **MENU** button until the display shows "**VOX**". On the right of the **CHANNEL NUMBER** display, a "***1***" ~ "***9***" icon appears. Select "***oF***" by pressing the ▲\▼ buttons and push the **PTT** key, or press the **MENU** button again to move to the next feature setting.

SILENT OPERATION

Your radio has a **SILENT OPERATION** mode. In this mode, all "beeps" and "tones" are disabled.

*To set the **SILENT OPERATION***, press the **MENU** button until the display shows a "***bP***" icon. Select "***on***" or "***oF***" by pressing the ▲\▼ buttons and push the **PTT** key or **MENU** button.

ROGER BEEP (end of transmission) TONE

When the **PTT** button is released, the radio will beep to confirm to other users that your transmission has finished.

To set the **ROGER BEEP** tone, press the **MENU** button until the display shows an "***rb***". Select "***on***" or "***oF***" by pressing the ▲\▼ buttons and push the **PTT** key, or press the **MENU** button to move to the next feature setting.

CALL ALERT SELECTION

Your radio has 10 selectable **CALL ALERTS** (15 for **GXT1050**). To select, press the **MENU** button until a "***CA***" icon appears and to the right of the "***CA***" icon the current **CALL ALERT** setting is displayed. Then press the ▲\▼ buttons to make the CALL ALERT selections, and the radio will emit a corresponding tone for each selection. To confirm, press the **PTT** button or press the **MENU** button to move to the next feature setting.

Note : GXT1050 has 5 additional "Animal Sound" CALL Alerts - Cougar, Duck, Crow, Wolf, and Turkey.

VIBRATE ALERT

To set the **VIBRATE ALERT**, press the **MENU** button until the display shows the icon. Select "***on***" or "***oF***" by pressing the ▲\▼ buttons and push the **PTT** button, or press the **MENU** button. The icon will remain on the display if set to "***on***".

DUAL WATCH FUNCTION

Your radio has a **DUAL WATCH** function, to enable user to scan 2 channels for any activity. The first channel will be the current channel setting and the second channel will be the selected channel on the **MENU**.

To turn the **DUAL WATCH** on, press the **MENU** button until the ***"oF"*** icon appears blinking on the left of the display, while the ***"dU"*** icon appears on the right. Select the second channel by pressing the ▲\▼ button. Press the **MENU** button again and the ▲\▼ buttons to choose the Privacy Code ***(oF/dc/ct)***. Then press the **MENU** button again and the ▲\▼ buttons to set the Privacy Code. ***Please note that the Privacy Code can be set only on Ch 1~22***. To confirm, press the **PTT** button or the **MENU** button.

The **RX** and **TX** icon will appear at the same time to signify that the **DUAL WATCH** function is on and the radio will start to scan both the current channel/code-in-use and the selected channel/code and stop on any active channel. Your radio will resume scanning after 4 seconds when the channel is no longer active. When you press the **PTT** button to transmit on an active channel, the scanning function will stop and remain on the active channel for 10 seconds before resuming scan when the **PTT** button is no longer pressed. To resume scanning, quickly press the ▲\▼ button.

To turn the **DUAL WATCH** function off, press the **SCAN** button.

! ***Note : When the Group Mode is on, you cannot set the Privacy Code of the second channel. It will follow the Group Code of the first channel.***

WHISPER FUNCTION

Your radio has a **WHISPER** function, to enable the user to transmit a high sound level even if he is whispering on the microphone.

To set the **WHISPER** function, press the **MENU** button until the display shows the ***WI*** icon blinking. Select "***on***" or "***oF***" by pressing the ▲\▼ buttons and push the **PTT** button, or press the **MENU** button.The ***WI*** icon will remain on the display if set to "***on***".

Note : The WHISPER function is recommended for use with headsets for optimum performance

NOAA WEATHER RADIO/SCAN

Your radio has a **NOAA WEATHER RADIO** function, to enable the user to receive weather reports from designated **NOAA** stations.

Your radio also has a **NOAA WEATHER SCAN** function, to enable the user to scan all 10 channels of the **NOAA WEATHER RADIO**.

To turn the **NOAA WEATHER SCAN** on, press and hold the **MENU** button for 5 seconds while in GMRS mode. The radio will go to **WX Band** mode and start scanning all 10 channels and stop on any active channel. When the channel becomes inactive for 10 seconds the radio will resume scanning.

To stop the **NOAA WEATHER (WX) SCAN** and set the channel manually on the **WX Band**, press the **MENU** button during **NOAA WEATHER (WX) SCAN**. The radio will stop scanning and the display will show the current **WX Band** channel setting and the icon. While in **WX Band** mode press the ▲\▼ buttons to select one of the 10 **NOAA WEATHER (WX) BAND** channels. To confirm, press the **PTT** button or press the **MENU** button to move to the next feature setting.

To turn the **NOAA WEATHER RADIO** off, press the **PTT** button. The current **GMRS** radio setting will be displayed and the icon will go off.

NOAA WEATHER ALERT

Your radio has a **NOAA WEATHER ALERT** function, to enable you to automatically receive weather alerts from designated **NOAA** stations.

*The **NOAA WEATHER (WX) ALERT** is automatically on during **NOAA WEATHER SCAN** mode.*

To turn the **NOAA WEATHER (WX) ALERT** on during normal **NOAA WEATHER RADIO** mode, press the **MENU** button twice while in **NOAA WEATHER SCAN** mode. The display shows ***"AL,"*** while on the right an ***"oF"*** icon appears blinking. Select ***"on"*** by pressing the ▲\▼ buttons. To confirm, press the **PTT** button or press **MENU**. The radio will return to **WX BAND** and the icon will continue blinking. If the radio receives a **WX ALERT** signal from a designated **NOAA** station while in **GMRS Radio** mode, the radio will beep for 10 seconds while an ***"AL"*** and ***"In"*** icon appear on the display, after which it will automatically go to **WX BAND**.

If any button is pressed while beeping in **GMRS Radio** mode, the radio will automatically go to **WX BAND**.

To turn the **NOAA WEATHER (WX) ALERT** off, press the **MENU** button twice while in **WX Band**. The display shows ***"AL,"*** while on the right an ***"on"*** icon appears blinking. Select ***"oF"*** by pressing the ▲\▼ buttons. To confirm, press the **PTT** button or the **MENU** button.

EXTERNAL SPEAKER/MICROPHONE JACK

Your radio can be used with an optional external speaker/microphone or headset, freeing your hands for other tasks. To use an optional speaker / microphone or headset:

- Open the rubber cap on the side of the radio.
- Insert the plug(s) into the **SPK/MIC** jacks.
- Place the earbud into your ear, and adjust the mic into your desired position.

Note : You can charge a rechargeable NiMH battery pack thru the CHG Jack

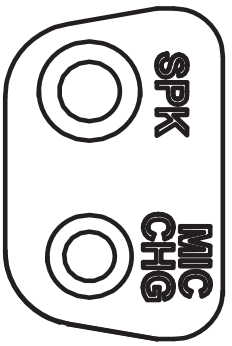

TROUBLESHOOTING GUIDE

PROBLEM	SOLUTION
No Power	- Check battery installation and/or replace batteries.
Cannot Receive Messages	- Confirm the radios have the same channel settings. - Make sure that you are within range of the other transceivers. - Buildings and other structures may interfere with your communication. ***(See ABOUT RANGE on Page 7)***
Radio is not responding to button presses	- Make sure key lock is not on ***(See KEYPAD LOCK on Page 9)***. - Radio might need to be reset. Turn radio off then on.
Display is dim	- Recharge or replace batteries.
Charger not functioning	- Contacts on the back of the radio may require cleaning. - Ensure the outlet where the charger is plugged in is functioning properly. - Check that the battery pack is installed in the radio properly.

USE AND CARE

1. Use a soft damp cloth to clean the radio
2. **Do not** use alcohol or cleaning solutions to clean the radio.
3. **Do not** immerse the radio in water.
4. Dry the radio with a dry lint-free cloth should it get wet.
5. Turn off the radio and remove the batteries during long-term storage.

If you have a problem which you believe requires service, please call first and speak with a service technician at 816-241-8500. Many problems can be remedied over the phone without returning the unit for service.

SPECIFICATIONS

Channels 22 GMRS Channels +142 Privacy Codes
28 Midland Preset Channels
10 NOAA Weather (WX) Band Channels

Operating Frequency UHF 462.5500 ~ 467.7125 MHz

Power Source 4 AA Alkaline or 6.0V Rechargeable NiMH battery pack

GMRS FREQUENCY CHART (MHz)

CH. No	CH. Freq.	CH. No	CH. Freq.	CH. No	CH. Freq.
1	462.5625	**9**	467.5875	**17**	462.6000
2	462.5875	**10**	467.6125	**18**	462.6250
3	462.6125	**11**	467.6375	**19**	462.6500
4	462.6375	**12**	467.6625	**20**	462.6750
5	462.6625	**13**	467.6875	**21**	462.7000
6	462.6875	**14**	467.7125	**22**	462.7250
7	462.7125	**15**	462.5500		
8	467.5625	**16**	462.5750		

* Channels 8~14 are low-power GMRS channels

MIDLAND PRESET CHANNELS

Midland Preset Channel	Frequency	GMRS Channel	Privacy Code	Midland Preset Channel	Frequency	GMRS Channel	Privacy Code
Channel 23	462.5625	1	CTCSS 38	Channel 37*	467.7125	14	DCS 19
Channel 24	462.6125	3	CTCSS 35	Channel 38	462.5750	16	DCS 22
Channel 25	462.6625	5	CTCSS 32	Channel 39	462.6250	18	DCS 25
Channel 26	462.7125	7	CTCSS 29	Channel 40	462.6750	20	DCS 28
Channel 27	462.5500	15	CTCSS 26	Channel 41	462.7250	22	DCS 31
Channel 28	462.6000	17	CTCSS 23	Channel 42	462.5625	1	CTCSS 14
Channel 29	462.6500	19	CTCSS 20	Channel 43	462.6125	3	CTCSS 11
Channel 30	462.7000	21	CTCSS 17	Channel 44	462.6625	5	CTCSS 8
Channel 31	462.5875	2	DCS 1	Channel 45	462.7125	7	CTCSS 5
Channel 32	462.6375	4	DCS 4	Channel 46	462.5500	15	CTCSS 2
Channel 33	462.6875	6	DCS 7	Channel 47	462.6000	17	CTCSS 37
Channel 34*	467.5625	8	DCS 10	Channel 48	462.6500	19	CTCSS 34
Channel 35*	467.6125	10	DCS 13	Channel 49	462.7000	21	CTCSS 31
Channel 36*	467.6625	12	DCS 16	Channel 50	462.7250	2	DCS 2

NOAA WEATHER (WX) RADIO FREQUENCY CHART (MHz)

CH. No	CH. Freq.	CH. No	CH. Freq.
1	162.550	**6**	162.500
2	162.400	**7**	162.525
3	162.475	**8**	161.650
4	162.425	**9**	161.775
5	162.450	**10**	163.275

* Channel 8, 9 and 10 are designated Canadian Marine Frequencies

PRIVACY CODES FREQUENCY CHART (Hz)

Code	Freq.	Code	Freq.	Code	Freq.	Code	Freq.	Code	Freq.
1	67.0	9	91.5	17	118.8	25	156.7	33	210.7
2	71.9	10	94.8	18	123.0	26	162.2	34	218.1
3	74.4	11	97.4	19	127.3	27	167.9	35	225.7
4	77.0	12	100.0	20	131.8	28	173.8	36	233.6
5	79.7	13	103.5	21	136.5	29	179.9	37	241.8
6	82.5	14	107.2	22	141.3	30	186.2	38	250.3
7	85.4	15	110.9	23	146.2	31	192.8		
8	88.5	16	114.8	24	151.4	32	203.5		

Note: Privacy codes can be programmed for use on Channels 1~22 only

DCS PRIVACY CODE CHART

No.	CODE	No.	CODE	No.	CODE	No.	CODE
1	023	27	165	53	413	79	731
2	025	28	172	54	423	80	732
3	026	29	174	55	431	81	734
4	031	30	205	56	432	82	743
5	032	31	223	57	445	83	754
6	043	32	226	58	464	84	036
7	047	33	243	59	465	85	053
8	051	34	244	60	466	86	122
9	054	35	245	61	503	87	145
10	065	36	251	62	506	88	212
11	071	37	261	63	516	89	225
12	072	38	263	64	532	90	246
13	073	39	265	65	546	91	252
14	074	40	271	66	565	92	255
15	114	41	306	67	606	93	266
16	115	42	311	68	612	94	274
17	116	43	315	69	624	95	325
18	125	44	331	70	627	96	332
19	131	45	343	71	631	97	356
20	132	46	346	72	632	98	446
21	134	47	351	73	654	99	452
22	143	48	364	74	662	100	454
23	152	49	365	75	664	101	455
24	155	50	371	76	703	102	462
25	156	51	411	77	712	103	523
26	162	52	412	78	723	104	526

Note: Privacy codes can be programmed for use on Channels 1~22 only

IMPORTANT: Changes or modifications to this unit not expressly approved by **MIDLAND RADIO CORP.** could void your right to operate this unit. Your radio is set up to transmit a regulated signal on an assigned frequency. It is against the law to alter or adjust the settings inside the COMMUNICATOR to exceed those limitations. Any adjustment to your radio must be made by qualified technicians.

LIMITED WARRANTY

Subject to the exclusions set forth below, Midland Radio Corporation will repair or replace, at its option without charge, any Midland GMRS transceiver which fails due to a defect in material or workmanship within Three Years following the initial consumer purchase.

This warranty does not apply to water damage, battery leak, abuse or misuse of unauthorized accessories, unauthorized service or modification or altered products. Accessories have a 90 day warranty from date of purchase, including any chargers, microphones, and cables.

This warranty does not include the cost of labor for removal or re-installation of the product in a vehicle or other mounting.

ANY IMPLIED WARRANTIES, INCLUDING, WITHOUT LIMITATION THE IMPLIED WARRANTIES OF MERCHANTABILITY AND FITNESS FOR A PARTICULAR PURPOSE, SHALL BE LIMITED AS SET FORTH HEREIN AND TO THE DURATION OF THE LIMITED WARRANTY, OTHERWISE THE REPAIR OR REPLACEMENT AS PROVIDED UNDER THIS EXPRESS LIMITED WARRANTY IS THE EXCLUSIVE REMEDY OF THE CONSUMER AND IS PROVIDED IN LIEU OF ALL OTHER WARRANTIES, EXPRESS OR IMPLIED. IN NO EVENT SHALL MIDLAND BE LIABLE, WHETHER IN CONTRACT OR TORT (INCLUDING BUT NOT LIMITED TO NEGLIGENCE, GROSS NEGLIGENCE, BODILY INJURY, PROPERTY DAMAGE AND DEATH) FOR DAMAGES IN EXCESS OF THE PURCHASE PRICE OF THE PRODUCT OR ACCESSORY, OR FOR ANY INDIRECT, INCIDENTAL, SPECIAL OR CONSEQUENTIAL DAMAGES OF ANY KIND, OR LOSS OF REVENUE OR PROFITS, LOSS OF BUSINESS, LOSS OF INFORMATION OR DATA OR OTHER FINANCIAL LOSS ARISING OUT OF OR IN CONNECTION WITH THE ABILITY OR INABILITY TO USE THE PRODUCTS OR ACCESSORIES TO THE FULL EXTENT THESE DAMAGES MAY BE DISCLAIMED BY LAW.

For Product Purchased in the USA:

Performance of any obligation under this warranty may be obtained by returning the warranted product, prepaid freight, along with proof of purchase to:

Midland Radio Corporation
Warranty Service Department
5900 Parretta Drive
Kansas City, MO 64120

This warranty gives you specific legal rights, and you may also have other rights, which vary from state to state.

Note: The above warranty applies only to merchandise purchased in the United States of America or any of the territories or possessions thereof, or from a U.S. Military exchange.

ACCESSORIES

Accessories can be purchased at **midlandusa.com**.

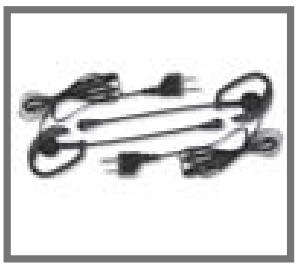

AVP1
- Over the Ear Headsets

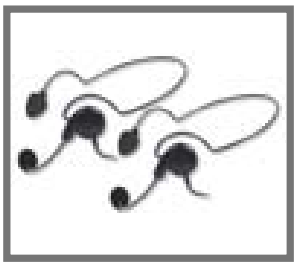

AVPH5
- Behind the Head Headsets

AVP17
- Rechargeable Battery Pack

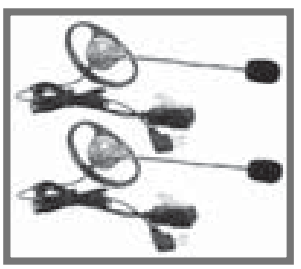

AVPH7
- Camo Headsets with Boom Mic

AVPH2
- Closed Face Helmet Headset Kit

AVP-H8
- Acoustic Throat Mic

AVPH3
- Surveillance Headsets

AVPH10
- Shoulder Speaker Mic

AVPH4
- Wrap Around the Ear Headsets

THIS PAGE IS INTENTIONALLY LEFT BLANK

MIDLAND RADIO CORPORATION
5900 Parretta Drive
Kansas City, MO 64120
Call 816.241.8500

We'd love to hear from you! Let us know what you think of your new Midland product at

or by visiting us at
midlandusa.com

Note: Features & Specifications are subject to change without notice. MIDLAND is not responsible for unintentional errors or omissions on its packaging.