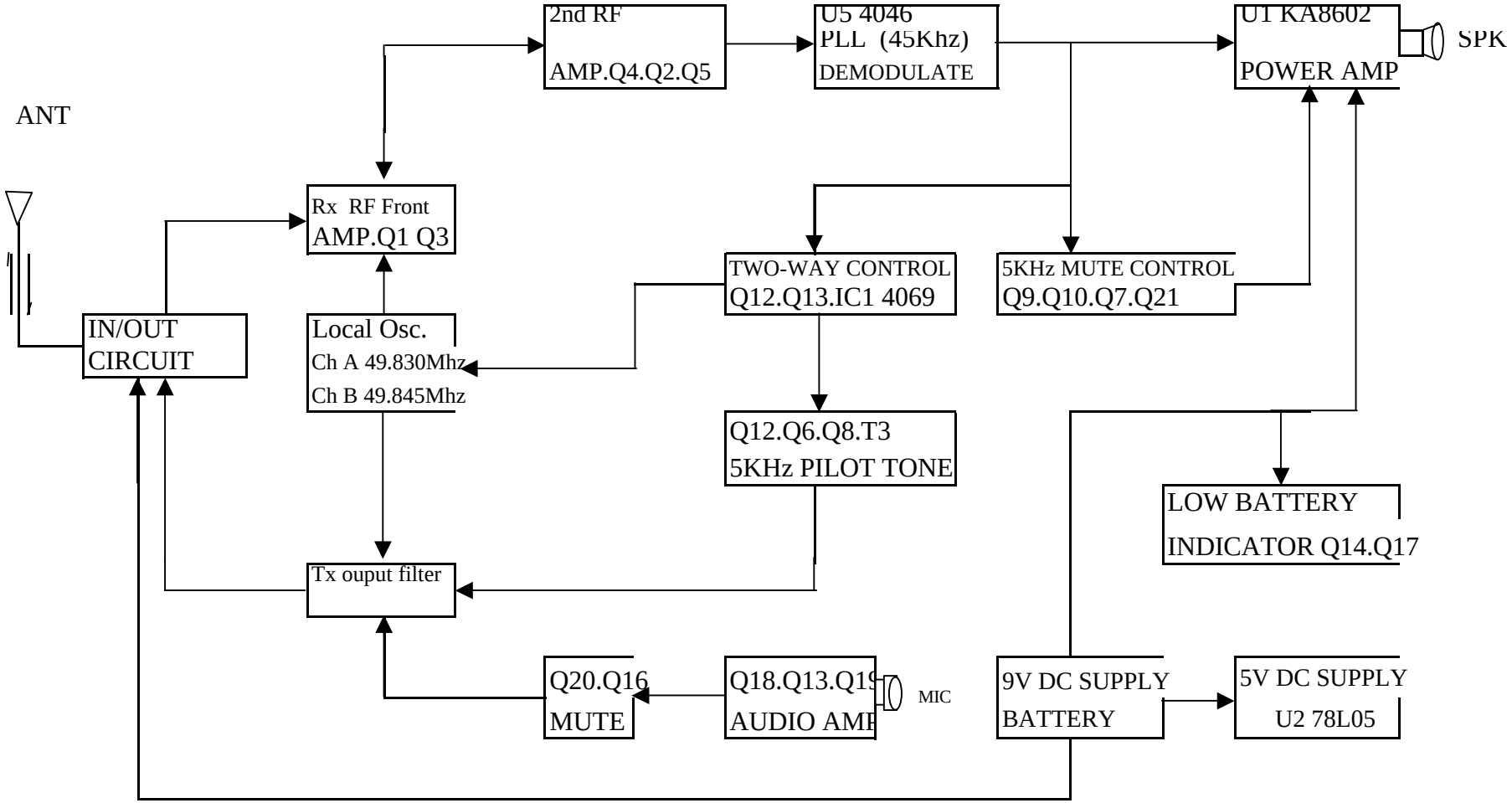CHILD UNIT CIRCUIT BLOCK DIAGRAM